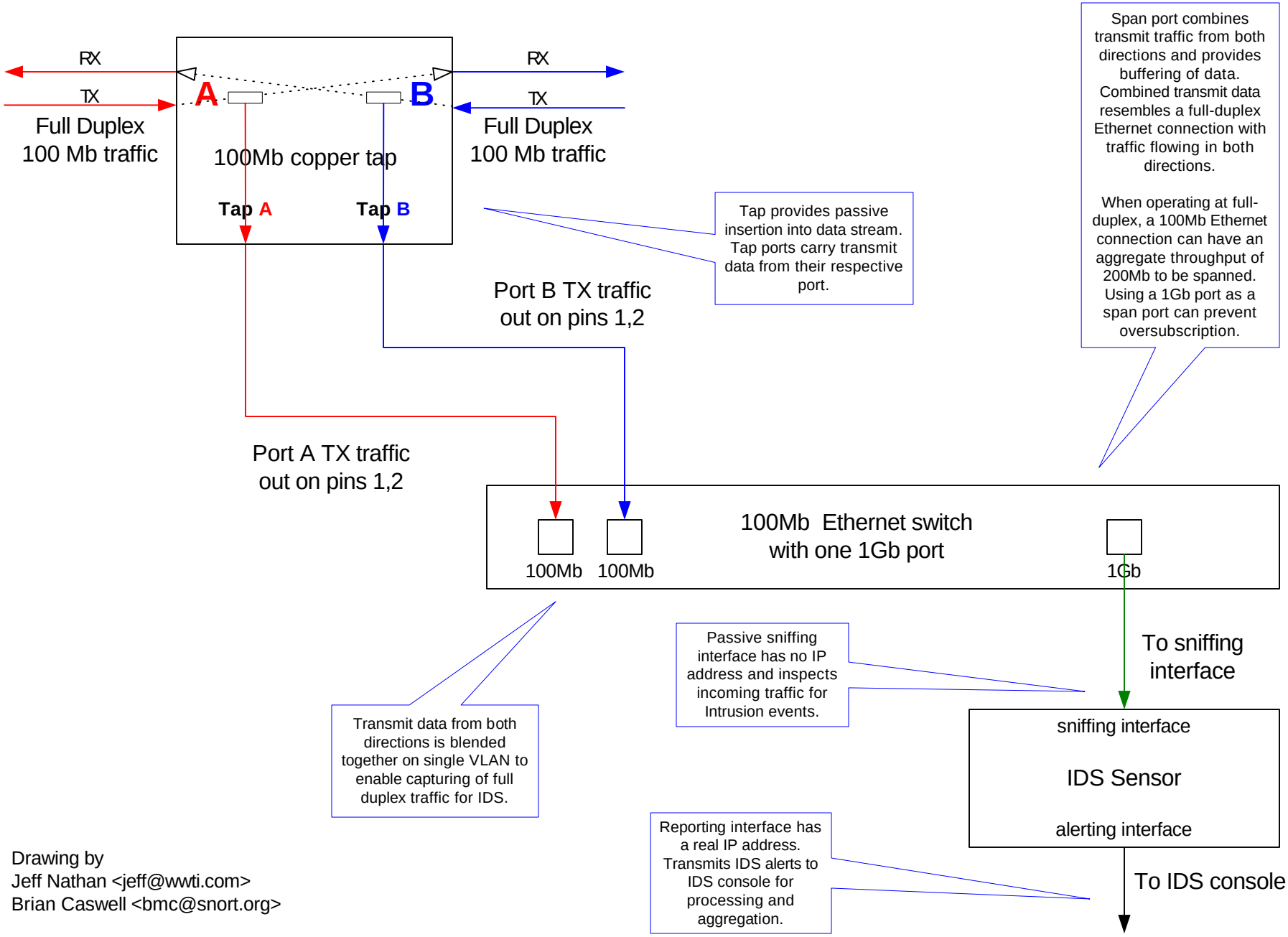

Drawing by
Jeff Nathan <jeff@wwti.com>
Brian Caswell <bmc@snort.org>