Operational Amplifiers

OPERATIONAL AMPLIFIERS

SECOND EDITION

ARPAD BARNA
University of California
Santa Cruz

and

DAN I. PORAT
Stanford Linear Accelerator Center
Stanford University

WILEY

A Wiley-Interscience Publication
JOHN WILEY & SONS
New York · Chichester · Brisbane · Toronto · Singapore

Preface

This second edition has been extensively revised to reflect new developments during the 17 years that have elapsed since the publication of the first edition. These include the substantial technological advances that took place, especially in operational amplifiers with high gain, low input currents and offset voltages, and high speed. The entire text has been thoroughly revised, and the chapters on stability, frequency response, and transient response were considerably expanded and completely rewritten to reflect the vast changes during the last decade.

Chapters 7 and 8 have been most significantly impacted. Chapter 7 describes stability criteria and phase margins of feedback amplifiers using operational amplifiers with up to 4 corner frequencies. Frequency-independent feedback, lag compensation, lead–lag compensation, and lag–lead compensation are treated. Conditional stability is discussed, as well as limitations characteristic of inverting feedback amplifiers.

Chapter 8 provides a detailed description of frequency response and transient response of feedback amplifiers using operational amplifiers with up to 3 corner frequencies. Frequency-independent feedback, lag compensation, lead–lag compensation with and without pole-zero cancellation, and lag–lead compensation are treated, including design graphs based on the solution of the third-order and fourth-order equations that arise. The results are applied to the latest wideband monolithic and hybrid operational amplifiers in worked examples and in problems.

Two new chapters were also added on applications and on internal structure: Chapter 11 describes amplifiers with current source inputs, as well as adders, integrators, differentiators, and nonlinear circuits; Chapter 12 discusses input stages, current mirrors, and output stages in operational amplifiers.

The book now has 12 chapters, 132 worked examples, 319 problems, 102 figures, and 3 appendixes. Answers to selected problems are also given.

We would like to take this opportunity to acknowledge the contributions of Wiley Editor George J. Telecki and his associates in making this second edition a reality.

ARPAD BARNA
DAN I. PORAT

Stanford, California
September 1988

Preface to the First Edition

The availability of mass-produced operational amplifiers at a low cost has resulted in their widespread use in many applications. Because of their performance, these devices have brought about designs with unprecedented precision, speed, reliability, and reproducibility. In order to take full advantage of this potential, thorough and precise design techniques must be applied. This text offers the reader a basic understanding of the use of operational amplifiers in linear circuits fundamental to other applications.

The book developed from a senior elective course in electronic instrumentation given at the University of Hawaii. Over 200 examples and problems expand the book's scope and illustrate realistic applications. These features, and a structure aimed at easy access to the material, make this book useful both as a text and as a reference.

After a general introduction, basic properties of ideal operational amplifiers are described. Feedback is introduced in Chapter 3. The effects of feedback and of component variations on accuracy are discussed in Chapter 4. Transient response and frequency response of operational amplifiers and feedback amplifiers are summarized in Chapters 5 and 6. Stability considerations and criteria are introduced in Chapter 7, compensation techniques are described in Chapter 8. Common mode rejection, input and output impedances, and supply voltage rejection properties are summarized in Chapter 9, input currents, offset voltage, slew rate, noise, and other limitations in Chapter 10. An Appendix provides tables summarizing the results obtained in the text and lists the properties of operational amplifiers used in the examples and problems. Answers to selected problems are also given.

ARPAD BARNA

Honolulu, Hawaii
February 1971

Contents

CHAPTER 1
Operational Amplifiers 1
1.1 Properties 2
1.2 Applications 3
Problems 3

CHAPTER 2
Ideal Operational Amplifiers 5
2.1 Noninverting Amplifiers 5
2.2 Inverting Amplifiers 6
2.3 Differential Amplifiers 6
2.4 Floating-Input Differential Amplifiers 7
Problems 8

CHAPTER 3
Feedback 11
3.1 Noninverting Feedback Amplifiers 11
3.2 Inverting Feedback Amplifiers 13
3.3 Differential Feedback Amplifiers 15
3.4 Voltage Followers 19
3.5 Instrumentation Amplifiers 19
Problems 21

CHAPTER 4
Accuracy of the Amplification 27
4.1 Small Variations in Operational Amplifier Amplification 28
4.2 Small Variations in the Feedback Resistor 30
4.3 Small Variations in the Input Resistor 33
4.4 Several Sources of Variations 33
Problems 35

CHAPTER 5
Frequency Response and Transient Response of Operational Amplifiers, Part I 39
5.1 Lag Networks 39
5.2 Bode Plots 44
5.3 Cascaded Lag Networks 45
Problems 55

CHAPTER 6
Frequency Response and Transient Response of Operational Amplifiers, Part II 59
6.1 Modified Lag Networks 59
6.2 Lead Networks 63
6.3 Voltage Divider Networks 66
6.4 Compound Lag Networks 70
6.5 Series *RLC* Circuits 76
Problems 80

CHAPTER 7
Stability of Feedback Amplifiers 83
7.1 The Nyquist Criterion 83
7.2 Lag Networks 87
7.3 Lag Compensation 94
7.4 Lead–Lag Compensation 96
7.5 Conditional Stability 98
7.6 Phase Margins 99
7.7 Inverting Feedback Amplifiers 114
Problems 115

CHAPTER 8
Frequency Response and Transient Response of Feedback Amplifiers 119
8.1 Operational Amplifiers with $A = A_{dc} = \infty$ 119
8.2 Operational Amplifiers with $A = A_{dc}/(1 + jf/f_1)$ 123
8.3 Operational Amplifiers with $A = A_{dc}/[(1 + jf/f_1)(1 + jf/f_2)]$ 135
8.4 Operational Amplifiers with $A = A_{dc}/[(1 + jf/f_1)(1 + jf/f_2)(1 + jf/f_3)]$ 166
8.5 Inverting Feedback Amplifiers 182
8.6 Computer-Aided Design 184
Problems 185

CHAPTER 9
Properties of Real Operational Amplifiers, Part I 197
9.1 Common-Mode Amplification and Common-Mode Rejection 197
9.2 Input Impedances 202
9.3 Output Impedance 205
9.4 Supply-Voltage Rejection 207
Problems 208

CHAPTER 10
Properties of Real Operational Amplifiers, Part II 209
10.1 Input Currents 209
10.2 Input Offset Voltage 211
10.3 Limitations and Ratings 212
10.4 Slew Rate 214
10.5 Noise 215
Problems 217

CHAPTER 11
Other Circuits 219
11.1 Current Source Inputs 219
11.2 Adder Circuits 223
11.3 Integrator Circuits 225
11.4 Differentiator Circuits 237
11.5 Nonlinear Circuits 239
Problems 240

CHAPTER 12
Internal Structure 245
12.1 Input Stages 245
12.2 Current Mirrors 247
12.3 Output Stages 252
Problems 253

APPENDIX A
Mathematical Equations 255
A.1 Quadratic Equations 255
A.2 Cubic Equations 255
A.3 Laplace Transform Pairs 257

APPENDIX B
Derivations 259
B.1 Proof of Equations 6.31a–e 259
B.2 The Relative Magnitudes of τ_L, τ_2, and τ_U 264

APPENDIX C
Properties of Operational Amplifiers Used in the Examples and Problems 267

Answers to Selected Problems 269
Index 271

CHAPTER 1

Operational Amplifiers

This chapter introduces distinctive features of *operational amplifiers* (OAs) and illustrates the theme of the book.* Detailed treatment of the subject matter begins with Chapter 2.

An operational amplifier (Figure 1.1) is characterized by an output voltage V_{out} that is proportional to the difference of its two input voltages V_p and V_n:

$$V_{out} = A(V_p - V_n). \tag{1.1}$$

A distinctive feature of operational amplifiers is that *amplification* (or *gain*) A is a function of frequency with a nonzero value at dc (zero frequency). This value is usually the maximum of A as a function of frequency.

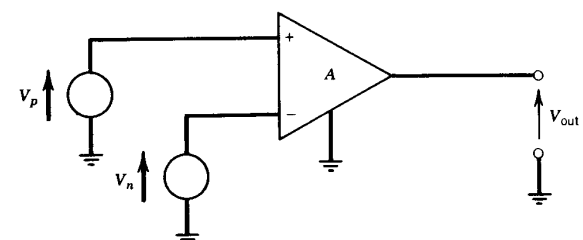

FIGURE 1.1 Schematic diagram of an operational amplifier.

EXAMPLE 1.1. In an operational amplifier described by Equation 1.1, $A = 10{,}000/(1 + jf/1\text{ MHz})$, where f is the frequency and $j \equiv \sqrt{-1}$. The dc value of A, that is, its value at zero frequency, is $A_{dc} \equiv A_{f=0} = 10{,}000$. The *magnitude* of amplification A as a function of frequency is

$$|A| = \frac{10{,}000}{\sqrt{1 + (f/1\text{ MHz})^2}}.$$

This has its maximum equal to A_{dc} at a frequency $f = 0$.

*New terms are introduced by italicized letters.

Another distinctive feature of operational amplifiers follows from Equation 1.1: The output voltage—at least in principle—is zero when both input voltages are zero.

1.1 Properties

It would be desirable to have operational amplifiers described by Equation 1.1 with an amplification A that has precisely defined frequency characteristics, that is independent of signal levels, time, and temperature, and that is identical from unit to unit. It would also be desirable to have Equation 1.1 satisfied exactly: V_{out} should be zero when $V_p = V_n$, no matter how large they are.

In reality, amplification A is a function of signal level, time, temperature, and power supply voltage, and varies from unit to unit—sometimes by as much as a factor of five. Operational amplifiers also have a nonzero *input offset voltage* (typically a few millivolts) that adds to $V_p - V_n$ and that varies with temperature and from unit to unit.

EXAMPLE 1.2. An operational amplifier has a dc amplification $A_{dc} = 1000$ and a maximum input offset voltage $V_{offset} = \pm 2$ mV. As a result, for zero input voltages the output voltage can be anywhere within the range given by $V_{out} = V_{offset}A = (\pm 2\text{mV})(1000) = \pm 2$ V. Thus, if $V_p = V_n = 0$, output voltage V_{out} is between -2 V and $+2$ V.

In the case when the two input voltages are equal but not zero, that is, $V_p = V_n \neq 0$, some fraction of these input voltages finds its way to the output terminal; this fraction is designated *common-mode amplification* A_{CM}.

EXAMPLE 1.3. An operational amplifier has a common-mode amplification $A_{CM} = 0.0001$. Thus, if $V_p = V_n = 1$ V, the output voltage, neglecting input offset voltage V_{offset}, is $V_{out} = A_{CM}V_p = A_{CM}V_n = (0.0001)(1\text{ V}) = 0.1$ mV.

It would also be desirable to have operational amplifiers with zero *input currents* flowing into their two input terminals. In reality, there is always some (possibly quite small) input current.

EXAMPLE 1.4. The average of the two input currents is designated *input bias current*. An operational amplifier has a maximum input bias current $I_B = 40\text{ pA} = 40 \times 10^{-12}$ A. Thus, each of the two input currents could be anywhere between zero and 80 pA. As a result of well-controlled manufacturing technology, however, in this operational amplifier the two input currents are always within 15 pA of each other; this is expressed by stating that the maximum *input offset current* is 15 pA.

Properties of operational amplifiers will be discussed in detail in subsequent chapters. Whether imperfections of an operational amplifiers are significant or not depends on the requirements of the particular application.

1.2 Applications

Operational amplifiers can be used in many circuits, such as current amplifiers, pulse shapers, and nonlinear circuits. Such applications are discussed in Chapter 11; whereas in Chapters 2–10 the discussion centers on use as a voltage amplifier—an application that is perhaps basic to all other uses.

It will be seen that by use of *feedback*, some properties of the resulting amplifier may be improved at the expense of others, whereas some characteristics cannot be altered by feedback. Thus, for example, the dc amplification and its accuracy can be changed by feedback, but the input offset voltage cannot be improved.

It is not practical to discuss all possible amplifier configurations. Emphasis is placed on simple circuits that can be used as building blocks in larger systems.

PROBLEMS

1.1 Find the value of output voltage V_{out} in Figure 1.1, if $V_p = 1$ mV, $V_n = 1.1$ mV, and $A = 10{,}000$.

1.2 Find the value of $|A|$ at a frequency $f = 10$ MHz, if $A = 1000/(1 + jf/10\text{ MHz})$.

1.3 An operational amplifier has a maximum input offset voltage $V_{offset} = \pm 3$ mV and a dc amplification $A_{dc} = 1000$. Find the limits of output voltage V_{out}, if the input voltages are $V_p = 5$ mV and $V_n = 6$ mV.

1.4 An operational amplifier has a common mode amplification $A_{CM} = 0.0002$. Find the magnitude of output voltage V_{out}, if the input voltages are $V_p = V_n = 2$ V.

1.5 In the circuit of Figure 1.2, $V_1 = 9$ mV, $V_2 = 8$ mV, $R_1 = R_2 = 10$ MΩ, and the maximum input offset current of the operational amplifier is 15 pA. Find the limits of V_{out} if $A = 1000$ and if the amplifier obeys Equation 1.1.

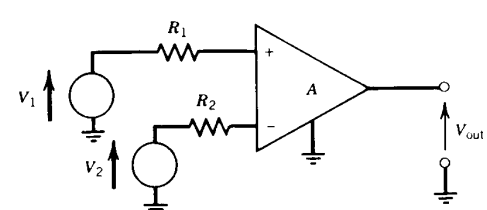

FIGURE 1.2

CHAPTER 2

Ideal Operational Amplifiers

An *ideal operational amplifier*, shown in Figure 2.1, has two input terminals, one output terminal, and one ground terminal. The voltage between the output terminal and the ground terminal, V_{out}, is related to the voltage between the positive (+) terminal and ground, V_p, and to the voltage between the negative (−) terminal and ground, V_n, as

$$V_{out} = A(V_p - V_n). \tag{2.1}$$

The quantity A is called *gain, amplification, open-loop gain, open-loop amplification,* or *differential voltage amplification* of the operational amplifier.* An ideal operational amplifier also has zero input currents, that is, in Figure 2.1,

$$I_p = I_n = 0. \tag{2.2}$$

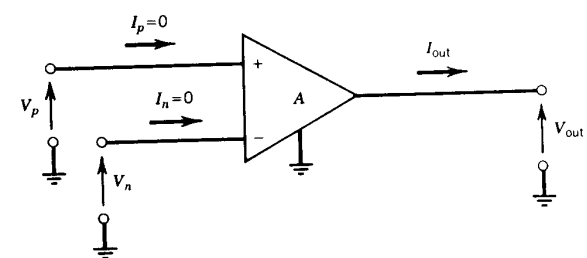

FIGURE 2.1 An ideal operational amplifier.

2.1 Noninverting Amplifiers

An ideal operational amplifier used as a *noninverting amplifier* is shown in Figure 2.2, where input voltage V_{in} is connected to the positive (+) terminal of the OA (operational amplifier). The output voltage, using Equation 2.1, is given by

$$V_{out} = AV_{in}. \tag{2.3}$$

*In Chapters 2–4, a frequency-independent A is assumed; frequency characteristics of A are introduced in Chapter 5.

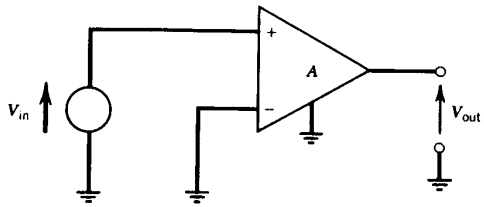

FIGURE 2.2 A noninverting amplifier.

EXAMPLE 2.1. An operational amplifier, used as a noninverting amplifier, has an amplification $A = 5000$; input voltage $V_{in} = 1$ mV. The resulting output voltage is $V_{out} = AV_{in} = (5000)(1\text{ mV}) = 5$ V.

2.2 Inverting Amplifiers

An ideal operational amplifier used as an *inverting amplifier* is shown in Figure 2.3, where input voltage V_{in} is connected to the negative (−) input terminal of the OA. The output voltage, using Equation 2.1, is given by

$$V_{out} = -AV_{in}. \tag{2.4}$$

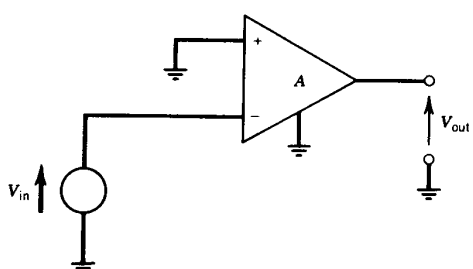

FIGURE 2.3 An inverting amplifier.

EXAMPLE 2.2. An operational amplifier, used as an inverting amplifier, has an amplification $A = 10{,}000$; input voltage $V_{in} = 1$ mV. The resulting output voltage is $V_{out} = -AV_{in} = (-10{,}000)(1\text{ mV}) = -10$ V.

2.3 Differential Amplifiers

An ideal operational amplifier used as a *differential amplifier* is shown in Figure 2.4, where input voltages voltages V_p and V_n are connected, respectively, to the

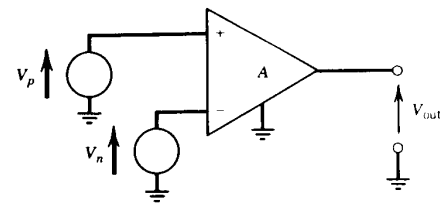

FIGURE 2.4 A differential amplifier.

positive (+) and negative (−) input terminals of the OA. The output voltage, using Equation 2.1, is given by

$$V_{out} = A(V_p - V_n). \tag{2.5}$$

EXAMPLE 2.3. An operational amplifier, used as a differential amplifier, has an amplification $A = 20{,}000$; input voltages are $V_p = 9$ mV and $V_n = 9.1$ mV. The resulting output voltage (disregarding the common-mode amplification) is $V_{out} = A(V_p - V_n) = (20{,}000)(9\text{ mV} - 9.1\text{ mV}) = -2$ V.

2.4 Floating-Input Differential Amplifiers

A differential amplifier with floating inputs is shown in Figure 2.5. It follows from Equation 2.1 that the output voltage is given by

$$V_{out} = AV_{in}. \tag{2.6}$$

EXAMPLE 2.4. An operational amplifier with an amplification $A = 1000$ is used in the floating-input differential amplifier of Figure 2.5; input voltage $V_{in} = 1$ mV. The output voltage is therefore $V_{out} = AV_{in} = (1000)(1\text{ mV}) = 1$ V.

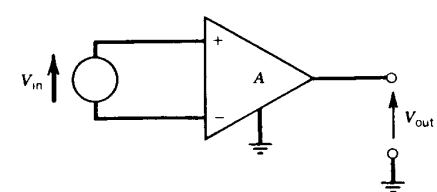

FIGURE 2.5 A differential amplifier with floating inputs.

PROBLEMS

2.1 Find the required value of amplification A, if an input voltage $V_{in} = 0.1$ mV is to be amplified to an output voltage $V_{out} = 2$ V. Which amplifier circuit is to be used?

2.2 An inverting amplifier has an amplification $A = 5000$ and an output voltage $V_{out} = 2$ V. Find the value of input voltage V_{in}.

2.3 Find the value of V_p in the differential amplifier of Figure 2.4, if the operational amplifier is ideal with an amplification $A = 10{,}000$, the output voltage $V_{out} = 1$ V, and if $V_n = 5$ mV.

2.4 Find the value of output voltage V_{out} in the circuit of Figure 2.6, if the operational amplifier is ideal with an amplification $A = 2000$ and if $V_{in} = -1$ mV.

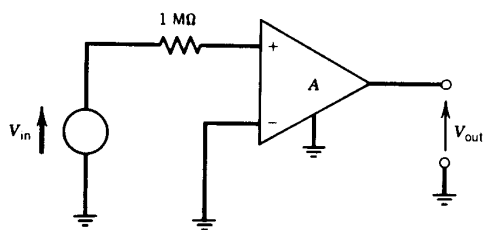

FIGURE 2.6

2.5 Find the value of output voltage V_{out} in the circuit of Figure 2.7, if the operational amplifier is ideal with an amplification $A = 2000$ and if $V_{in} = -1$ mV.

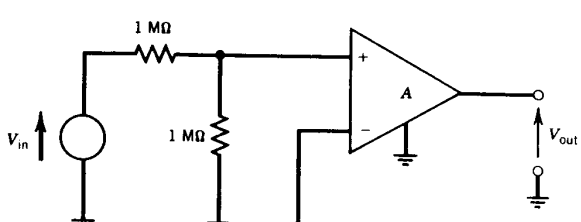

FIGURE 2.7

2.6 Find the values of $V_{out,1}$ and $V_{out,2}$ in the circuit of Figure 2.8, assuming $A_1 = 10{,}000$, $A_2 = 11{,}000$, and $V_{in} = -0.2$ mV.

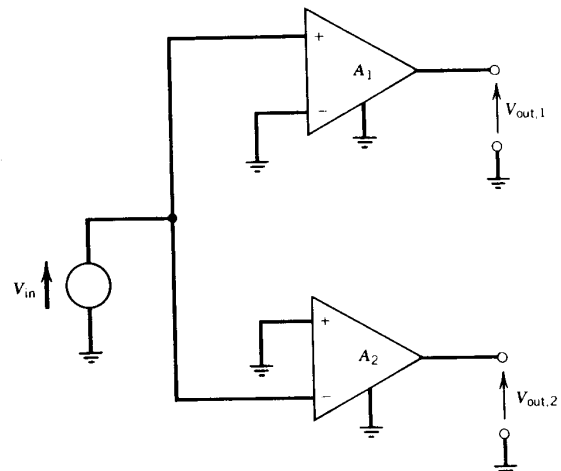

FIGURE 2.8

2.7 Find the value of V_{out} in the circuit of Figure 2.9, if $V_1 = 1$ mV, $V_2 = 5$ V, $A_1 = 5000$, and $A_2 = 10{,}000$. Repeat with $A_1 = 5001$.

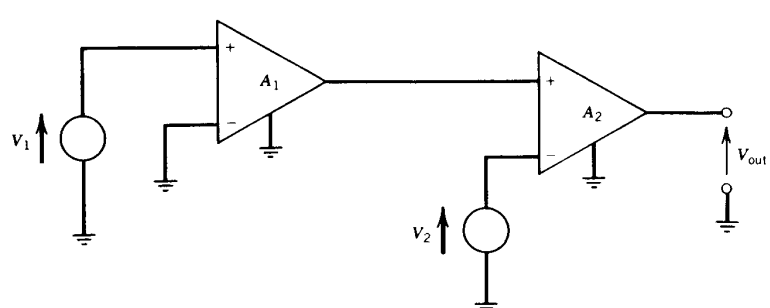

FIGURE 2.9

2.8 Find the value of V_{out} in the circuit of Figure 2.10, if $V_{in} = 10\,\text{mV}$ and $A = 2000$.

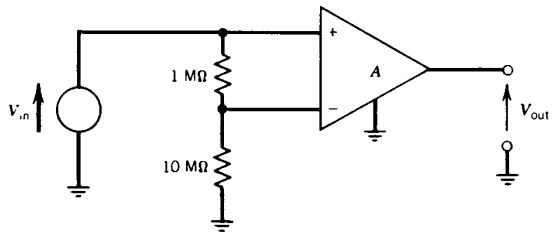

FIGURE 2.10

2.9 Find the values of $V_{out,1}$ and $V_{out,2}$ in the circuit of Figure 2.11, if $V_1 = V_2 = V_3 = 1\,\text{mV}$ and $A_1 = A_2 = 4000$.

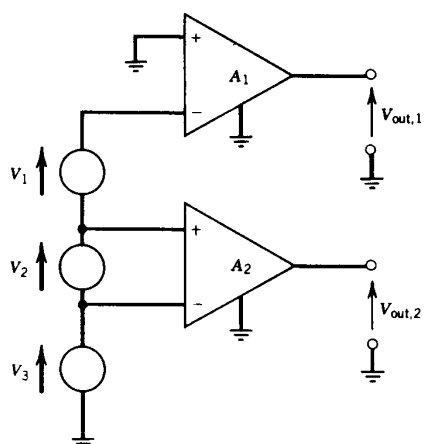

FIGURE 2.11

2.10 The differential amplifier of Figure 2.4 is used as a comparator with $V_n = 1$ V and $V_p = (t)(1000\text{ V/second})$. At what time will V_{out} equal zero?

CHAPTER 3

Feedback

The characteristics of an amplifier circuit using an operational amplifier can be substantially modified by the application of suitable *feedback*: The resulting amplification can be altered, its stability improved, the magnitude of spurious signals reduced, the bandwidth and the operating speed increased, and nonlinearities diminished. The discussion is focused on *negative feedback*, that is, on the case when a fraction of the output voltage is returned to the negative input terminal; some properties of *positive feedback* are mentioned briefly in Problem 3.16 of this chapter and in Problem 4.12 of Chapter 4.

In this chapter, amplifications of various feedback amplifiers are determined; other properties of feedback are discussed in subsequent chapters.

3.1 Noninverting Feedback Amplifiers

Consider the circuit of Figure 3.1. The input signal, V_{in}, is entered on the positive (+) input terminal of the operational amplifier. The negative (−) input terminal has an input current of $I = 0$ and is not connected to ground as previously, but it receives a voltage V_m that is a fraction of the output voltage V_{out}:

$$V_m = F_N V_{out}, \tag{3.1}$$

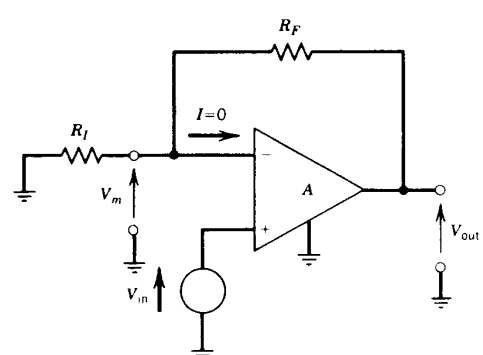

FIGURE 3.1 A noninverting amplifier with negative feedback.

where the *feedback return of the noninverting amplifier*, F_N, is defined as

$$F_N \equiv \frac{R_I}{R_I + R_F}. \tag{3.2}$$

To find V_{out} as a function of V_{in}, Equation 2.1 is applied as

$$V_{out} = A(V_{in} - V_m). \tag{3.3}$$

The combination of Equations 3.1 and 3.3 results in (see Problem 3.3)

$$\frac{V_{out}}{V_{in}} = \frac{A}{1 + AF_N}. \tag{3.4}$$

The quantity V_{out}/V_{in} is the *resulting amplification of the noninverting feedback amplifier*, which henceforth is denoted by M_N:*

$$M_N \equiv \frac{V_{out}}{V_{in}}. \tag{3.5}$$

Thus, for the noninverting amplifier with negative feedback,

$$M_N = \frac{A}{1 + AF_N}, \tag{3.6}$$

where feedback return F_N is given by Equation 3.2.

EXAMPLE 3.1. The feedback amplifier of Figure 3.1 uses an operational amplifier with an amplification $A = 1000$. Resistor values are $R_I = 1000\,\Omega$ and $R_F = 9000\,\Omega$. Thus, the feedback return is given by

$$F_N = \frac{R_I}{R_I + R_F} = \frac{1000\,\Omega}{1000\,\Omega + 9000\,\Omega} = 0.1,$$

and the resulting amplification of the feedback amplifier is

$$M_N = \frac{A}{1 + AF_N} = \frac{1000}{1 + (1000)(0.1)} = \frac{1000}{101} \cong 9.90.^{**}$$

It is of interest to determine what happens when amplification A of the operational amplifier is sufficiently large, so that the *feedback factor of the noninverting amplifier*, defined as AF_N, becomes much larger than unity, that is, when

$$AF_N \gg 1. \tag{3.7}$$

*Other terms in use for M_N are *feedback amplification, closed-loop amplification, feedback gain*, and *closed-loop gain*.

**The signs $\cong$ and $\approx$ are both used for *approximately equal* in this book.

In this case, the resulting amplification of Equation 3.6 can be simplified as

$$M_N = \frac{A}{1 + AF_N} \approx \frac{A}{AF_N} = \frac{1}{F_N}. \tag{3.8}$$

Thus, if A is sufficiently large to result in a feedback factor $AF_N \gg 1$, the resulting amplification of the feedback amplifier, M_N, becomes independent of A and is determined entirely by the feedback return, that is, by resistors R_I and R_F.

EXAMPLE 3.2. The feedback amplifier of Figure 3.1 uses an operational amplifier with an amplification $A = 100{,}000$. Resistor values are $R_I = 1000\,\Omega$ and $R_F = 9000\,\Omega$. Thus, the feedback return is

$$F_N = \frac{R_I}{R_I + R_F} = \frac{1000\,\Omega}{1000\,\Omega + 9000\,\Omega} = 0.1.$$

The value of feedback factor $AF_N = (100{,}000)(0.1) = 10{,}000 \gg 1$. Hence, the resulting amplification of the feedback amplifier is approximately $M_N \approx 1/F_N = 1/0.1 = 10$. The exact value of M_N is

$$M_N = \frac{A}{1 + AF_N} = \frac{100{,}000}{1 + 10{,}000} = 9.9990.$$

3.2 Inverting Feedback Amplifiers

An inverting amplifier with negative feedback is shown in Figure 3.2. Here, as in the case of the noninverting amplifier, a fraction of the output voltage is returned to the negative input terminal that has an input current of $I = 0$. Now, however, input signal V_{in} is entered at the negative terminal via input resistor R_I. By use of Equation 2.1,

$$V_{out} = -AV_m. \tag{3.9}$$

Also, by inspection of Figure 3.2,

$$I_m = \frac{V_{in} - V_m}{R_I} \tag{3.10}$$

and

$$I_m = \frac{V_m - V_{out}}{R_F}. \tag{3.11}$$

Combining Equations 3.9, 3.10, and 3.11, the *resulting amplification of the inverting feedback amplifier*, M_I,* becomes (see Problem 3.6)

$$M_I \equiv \frac{V_{out}}{V_{in}} = \frac{-A}{1 + (A + 1)F_I}, \tag{3.12}$$

*Other terms in use for M_I are *feedback amplification, closed-loop amplification, feedback gain*, and *closed-loop gain*.

where the *feedback return of the inverting amplifier*, F_I, is defined as

$$F_I \equiv \frac{R_I}{R_F}. \tag{3.13}$$

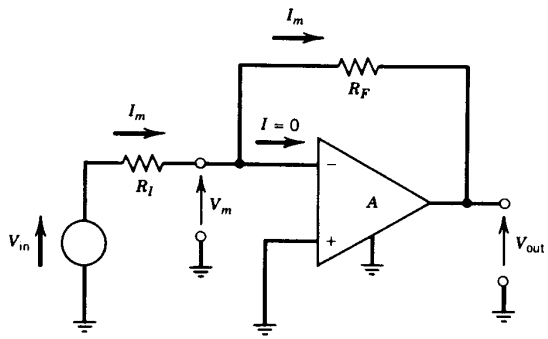

FIGURE 3.2 An inverting amplifier with negative feedback.

EXAMPLE 3.3. The feedback amplifier of Figure 3.2 uses an operational amplifier with an amplification $A = 1000$. Resistor values are $R_I = 1000\,\Omega$ and $R_F = 10{,}000\,\Omega$. Thus, the feedback return is

$$F_I = \frac{R_I}{R_F} = \frac{1000}{10{,}000} = 0.1,$$

and the resulting amplification of the feedback amplifier is

$$M_I = \frac{-A}{1 + (A+1)F_I} = \frac{-1000}{1 + (1000+1)(0.1)} \cong -9.89.$$

When amplification A is sufficiently large, so that the *feedback factor of the inverting amplifier*, defined as AF_I, is large, that is, when

$$AF_I \gg 1 + F_I, \tag{3.14}$$

then Equation 3.12 can be simplified as

$$M_I = \frac{-A}{1 + (A+1)F_I} = \frac{-A}{1 + F_I + AF_I} \approx \frac{-A}{AF_I} = -\frac{1}{F_I}. \tag{3.15}$$

Thus, as in the case of the noninverting amplifier with negative feedback, if amplification A is sufficiently large, the resulting amplification is determined entirely by the feedback return, that is, by resistors R_I and R_F.

EXAMPLE 3.4. The feedback amplifier of Figure 3.2 uses an operational amplifier with an amplification $A = 100{,}000$. Resistor values are $R_I = 1000\,\Omega$ and $R_F = 10{,}000\,\Omega$. Thus, the feedback return is

$$F_I = \frac{R_I}{R_F} = \frac{1000}{10{,}000} = 0.1.$$

The value of feedback factor $AF_I = (100{,}000)(0.1) = 10{,}000 \gg 1 + F_I = 1.1$. Therefore, the resulting amplification of the feedback amplifier is approximately $M_I \approx -1/F_I = -1/0.1 = -10$. The exact value of M_I is

$$M_I = \frac{-A}{1 + (A+1)F_I} = \frac{-100{,}000}{1 + (100{,}000 + 1)(0.1)} = -9.9989.$$

3.3 Differential Feedback Amplifiers

A differential amplifier with negative feedback is shown in Figure 3.3. The following equations can be written:

$$V_{out} = A(V_p - V_m), \tag{3.16}$$

$$I_m = \frac{V_n - V_m}{R_I}, \tag{3.17}$$

and

$$I_m = \frac{V_m - V_{out}}{R_F}. \tag{3.18}$$

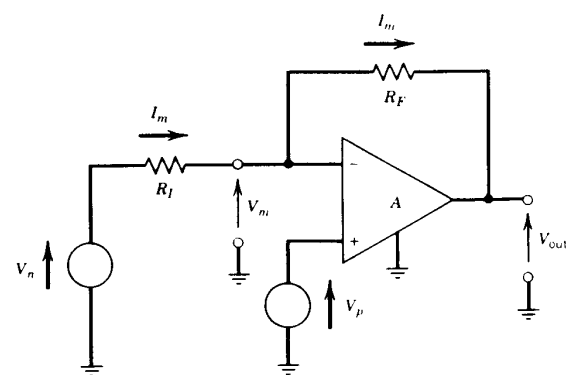

FIGURE 3.3 A differential amplifier with negative feedback.

The combination of Equations 3.16, 3.17, and 3.18 results in (see Problem 3.9)

$$V_{out} = \frac{A}{1 + AF_N} V_p - \frac{A}{1 + (A + 1)F_I} V_n, \tag{3.19}$$

where feedback returns F_N and F_I are defined as

$$F_N \equiv \frac{R_I}{R_I + R_F} \tag{3.20}$$

and

$$F_I \equiv \frac{R_I}{R_F}. \tag{3.21}$$

Equation 3.19 can also be written

$$V_{out} = M_N V_p + M_I V_n, \tag{3.22}$$

where M_N and M_I are defined as

$$M_N \equiv \frac{A}{1 + AF_N} \tag{3.23}$$

and

$$M_I \equiv \frac{-A}{1 + (A + 1)F_I} \tag{3.24}$$

with F_N and F_I given by Equations 3.20 and 3.21, respectively.

It can be seen that, in general, the magnitudes of M_N and M_I are not equal; therefore, the two input signals V_p and V_n are amplified by different factors. In the limiting case when feedback factors $AF_N \gg 1$ and $AF_I \gg 1 + F_I$,* output voltage V_{out} can be approximated as

$$V_{out} \approx \frac{1}{F_N} V_p - \frac{1}{F_I} V_n. \tag{3.25}$$

EXAMPLE 3.5. The circuit of Figure 3.3 uses an operational amplifier with an amplification $A = 100{,}000$. Resistor values are $R_I = 1000\,\Omega$ and $R_F = 9000\,\Omega$. The value of feedback return F_N is

$$F_N = \frac{R_I}{R_I + R_F} = \frac{1000\,\Omega}{1000\,\Omega + 9000\,\Omega} = \frac{1}{10}$$

and the value of feedback return F_I is

$$F_I = \frac{R_I}{R_F} = \frac{1000\,\Omega}{9000\,\Omega} = \frac{1}{9}.$$

*It can be shown that these two conditions are equivalent (see Problem 3.21).

The value of feedback factor AF_N is

$$AF_N = \frac{100{,}000}{10} = 10{,}000 \gg 1.$$

Thus, the use of Equation 3.25 is justified:

$$V_{out} \approx \frac{1}{F_N} V_p - \frac{1}{F_I} V_n = 10V_p - 9V_n.$$

The exact expression for V_{out}, using Equation 3.19, is

$$\begin{aligned} V_{out} &= \frac{A}{1 + AF_N} V_p - \frac{A}{1 + (A + 1)F_I} V_n \\ &= \frac{100{,}000}{1 + 100{,}000/10} V_p - \frac{100{,}000}{1 + (100{,}000 + 1)/9} V_n \\ &= 9.9990V_p - 8.9991V_n. \end{aligned}$$

The magnitudes of the amplifications of the two input signals V_p and V_n in the differential feedback amplifier can be made equal by modifying the circuit of Figure 3.3 as shown in Figure 3.4.

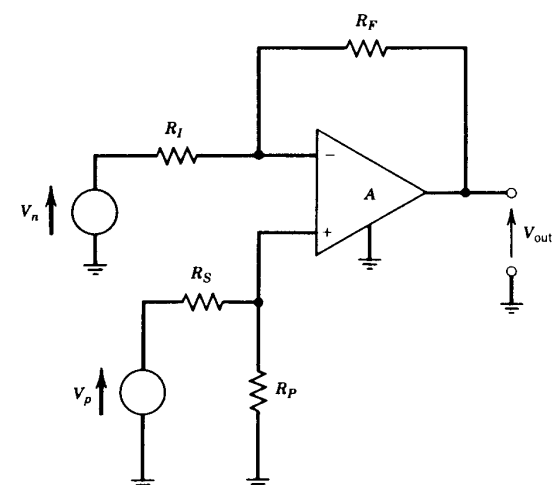

FIGURE 3.4 A differential amplifier with negative feedback and equalized amplifications.

Using Equation 3.19, the output voltage V_{out} can now be written

$$V_{out} = \frac{A}{1 + AF_N}\frac{R_P}{R_P + R_S}V_p - \frac{A}{1 + (A+1)F_I}V_n$$

$$= \frac{A}{1 + \frac{R_S}{R_P} + A\frac{R_I}{R_F}\left(1 + \frac{R_S}{R_P}\right)\Big/\left(1 + \frac{R_I}{R_F}\right)}V_p$$

$$- \frac{A}{1 + \frac{R_I}{R_F} + A\frac{R_I}{R_F}}V_n. \tag{3.26}$$

If

$$\frac{R_P}{R_S} = \frac{R_F}{R_I}, \tag{3.27}$$

Equation 3.26 becomes (see Problem 3.11)

$$V_{out} = \frac{A}{1 + (A+1)F_I}(V_p - V_n); \tag{3.28}$$

that is, the magnitudes of the amplifications of V_n and V_p are equal. Furthermore, if feedback factors $AF_N \gg 1$ and $AF_I \gg 1 + F_I$, V_{out} can be approximated as

$$V_{out} \approx \frac{1}{F_I}(V_p - V_n). \tag{3.29}$$

EXAMPLE 3.6. In the circuit of Figure 3.4, the amplification of the operational amplifier is $A = 100{,}000$. Resistor values are $R_I = 1000\,\Omega$, $R_F = 9000\,\Omega$, $R_S = 2000\,\Omega$, and $R_P = 18{,}000\,\Omega$. Hence, $R_P/R_S = R_F/R_I$, and the feedback factor is

$$AF_I = A\frac{R_I}{R_F} = 100{,}000\frac{1000\,\Omega}{9000\,\Omega} = 11{,}111 \gg 1 + F_I = 1 + \frac{R_I}{R_F} \cong 1.11.$$

Thus, Equation 3.29 is applicable; that is, the output voltage is approximately

$$V_{out} \approx \frac{1}{F_I}(V_p - V_n) = 9(V_p - V_n).$$

The exact expression for V_{out}, by use of Equation 3.28, is

$$V_{out} = \frac{A}{1 + (A+1)F_I}(V_p - V_n)$$

$$= \frac{100{,}000}{1 + (100{,}000 + 1)/9}(V_p - V_n) = 8.9991(V_p - V_n).$$

3.4 Voltage Followers

A special case of the noninverting feedback amplifier of Figure 3.1 occurs in the limit when $R_I \neq 0$ and $R_F = 0$, or when $R_I = \infty$ and $R_F \neq \infty$. This special case is the *voltage follower*, the simplest form of which is shown in Figure 3.5. The value of feedback return $F_N = 1$; thus, by use of Equation 3.4,

$$\frac{V_{out}}{V_{in}} = \frac{A}{1 + A}. \tag{3.30}$$

In the limiting case when amplification $A \gg 1$, Equation 3.30 reduces to

$$\frac{V_{out}}{V_{in}} \approx 1, \tag{3.31}$$

hence the name voltage follower.

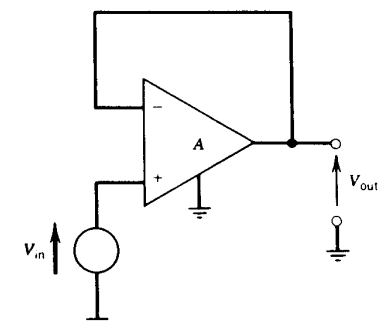

FIGURE 3.5 A voltage follower.

EXAMPLE 3.7. The circuit of Figure 3.5 uses an operational amplifier with an amplification $A = 100{,}000$. Therefore, by use of Equation 3.30,

$$\frac{V_{out}}{V_{in}} = \frac{100{,}000}{1 + 100{,}000} = 0.999990.$$

3.5 Instrumentation Amplifiers

Consider the *differential-in differential-out amplifier* shown in Figure 3.6. In the limit when the amplifications of the operational amplifiers can be approximated as $A_1 \to \infty$ and $A_2 \to \infty$, the voltage difference between the positive (+) and negative (−) input terminals of A_1 is zero, and the voltage difference between the positive (+) and negative (−) input terminals of A_2 is also zero.

As a result, the voltage across resistor R_3 equals V_{in}, and the output voltage becomes (see Problem 3.19)

$$V_{out} = V_{in} \frac{R_1 + R_2 + R_3}{R_3}, \tag{3.32}$$

where in practice R_1 and R_2 are chosen equal.

Thus, a differential-in differential-out amplifier has floating differential inputs with high input impedances, and its amplification is determined mainly by resistor values. This is in contrast to the operational amplifier of Figure 2.5, which has floating differential inputs with high input impedances but its amplification is A; it is also in contrast to the differential feedback amplifier of Figure 3.4, which has its amplification determined mainly by resistor values but does not have high input impedances.

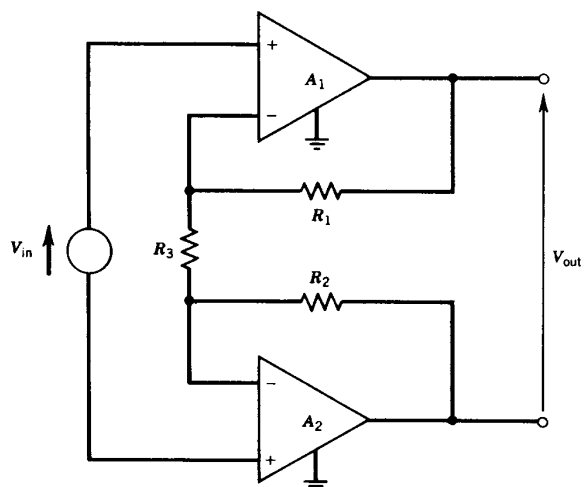

FIGURE 3.6 A differential-in differential-out amplifier.

An *instrumentation amplifier* is shown in Figure 3.7. It consists of the differential-in differential-out amplifier of Figure 3.6, followed by a differential amplifier with negative feedback and equalized amplification (Figure 3.4). When the amplifications of the operational amplifiers can be approximated as $A_1 \to \infty$, $A_2 \to \infty$, and $A_3 \to \infty$, and when $R_P/R_S = R_F/R_I$, the overall amplification of the circuit of Figure 3.7 can be written

$$\frac{V_{out}}{V_{in}} = -\frac{R_1 + R_2 + R_3}{R_3} \frac{R_F}{R_I}. \tag{3.33}$$

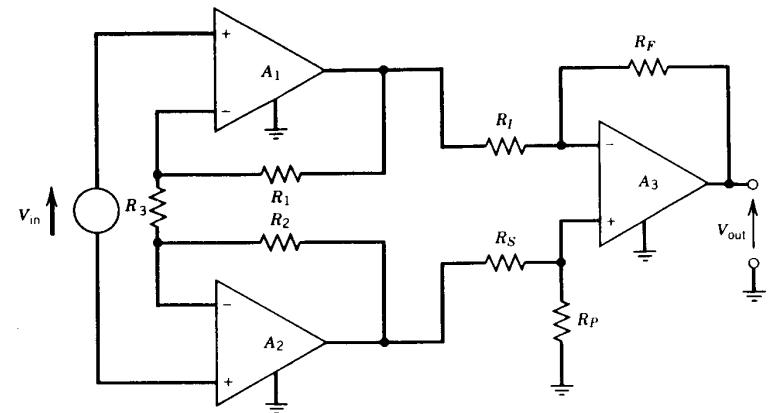

FIGURE 3.7 An instrumentation amplifier.

Thus, as was the case for the differential-in differential-out amplifier, an instrumentation amplifier also has floating differential inputs with high input impedances, and its amplification is determined mainly by resistor values. However, unlike a differential-in differential-out amplifier, an instrumentation amplifier has only a single output. The principal advantages of an instrumentation amplifier over a differential-in differential-out amplifier are a higher overall amplification and a lower common-mode amplification.

EXAMPLE 3.8. The instrumentation amplifier of Figure 3.7 uses operational amplifiers with amplifications that can be approximated as $A_1 \to \infty$, $A_2 \to \infty$, and $A_3 \to \infty$. Resistor values are $R_1 = R_2 = 20\,\text{k}\Omega$, $R_3 = 404\,\Omega$, $R_F = R_P = 200\,\text{k}\Omega$, and $R_I = R_S = 20\,\text{k}\Omega$. Thus, the resulting overall amplification is

$$\frac{V_{out}}{V_{in}} = -\frac{R_1 + R_2 + R_3}{R_3} \frac{R_F}{R_I} = -\frac{20\,\text{k}\Omega + 20\,\text{k}\Omega + 404\,\Omega}{404\,\Omega} \frac{200\,\text{k}\Omega}{20\,\text{k}\Omega}$$

$$= -1000.1.$$

PROBLEMS

3.1 Find the value of the resulting amplification of a noninverting feedback amplifier, M_N, if the operational amplifier used has an amplification $A = 10{,}000$; $R_I = 100\,\Omega$ and $R_F = 10{,}000\,\Omega$. What is the fractional change of M_N in percent, if A is changed to 11,000?

3.2 Derive V_m/V_{in} in Figure 3.1. What is V_m/V_{in} if feedback factor $AF_N \gg 1$?

3.3 Derive Equation 3.4.

3.4 Find the value of the resulting amplification of an inverting feedback amplifier, M_I, in the circuit of Figure 3.2, if the operational amplifier has an amplification $A = 10{,}000$; $R_I = 100\,\Omega$ and $R_F = 10{,}000\,\Omega$.

3.5 Derive V_m/V_{in} in Figure 3.2. What is V_m/V_{in} if feedback factor $AF_I \gg 1 + F_I$?

3.6 Derive Equation 3.12.

3.7 Derive V_{in}/I_m in Figure 3.2. What is V_{in}/I_m if feedback factor $AF_I \gg 1 + F_I$?

3.8 Find the values of the resulting amplifications M_N and M_I of a differential amplifier with feedback (Figure 3.3), if the operational amplifier used has an amplification $A = 10{,}000$; $R_I = 100\,\Omega$ and $R_F = 10{,}000\,\Omega$.

3.9 Derive Equation 3.19.

3.10 In the circuit of Figure 3.4, the operational amplifier has an amplification $A = 10{,}000$. Resistor values are $R_I = 100\,\Omega$, $R_F = 10{,}000\,\Omega$, $R_S = 100\,\Omega$, and $R_P = 10{,}000\,\Omega$; input voltages are $V_p = V_n = 1$ V. What is the value of output voltage V_{out}? Repeat with $R_P = 10{,}001\,\Omega$.

3.11 Derive Equation 3.28.

3.12 Find the value of V_{out}/V_{in} in the voltage follower of Figure 3.5 using an operational amplifier with an amplification $A = 1000$.

3.13 Find V_{out}/V_{in} in the circuit of Figure 3.8. Comment on the result.

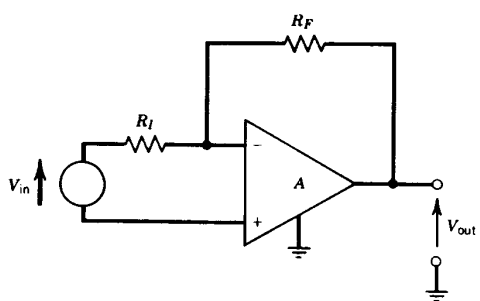

FIGURE 3.8

3.14 Find the value of output voltage V_{out} in the circuit of Figure 3.9, if $V_1 = 1$ mV and amplification $A = 1000$.

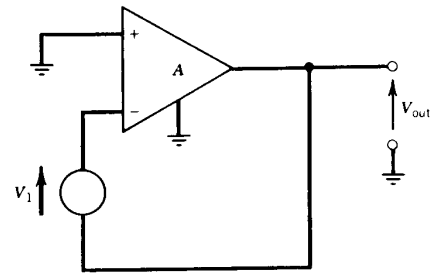

FIGURE 3.9

3.15 Derive an exact expression for V_{out} in the *compound differential amplifier* of Figure 3.10. Evaluate V_{out} for $V_1 = 10$ mV, $V_2 = 11$ mV, $R_1 = 0$, $R_2 = 0$, $A_1 = 11{,}000$, $A_2 = 10{,}000$, $R_I = R_S = 100\,\Omega$, $R_F = R_P = 100{,}000\,\Omega$, and $A_3 = 10{,}000$.

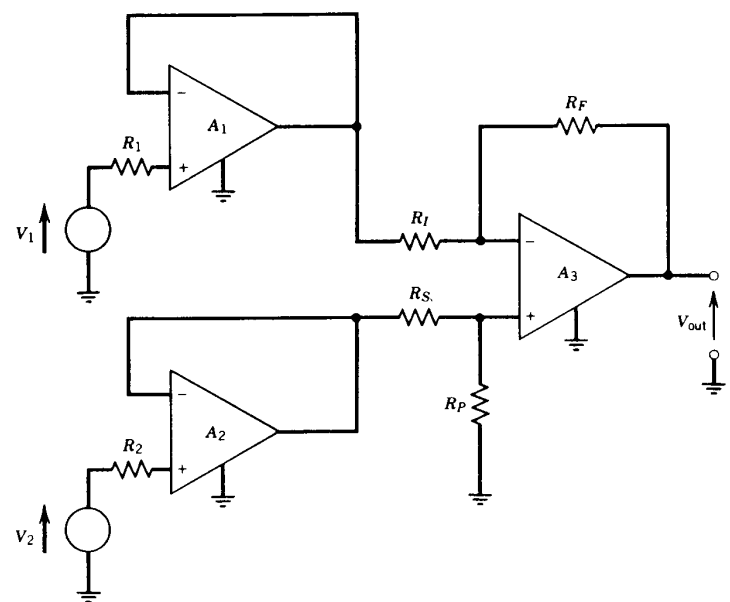

FIGURE 3.10 A compound differential amplifier.

3.16 An amplifier with *positive feedback* is shown in Figure 3.11. Determine the value of V_{out}/V_{in}, if the amplification of the operational amplifier $A = 100$; $R_I = 100\,\Omega$ and $R_F = 10{,}000\,\Omega$. Comment on the result.

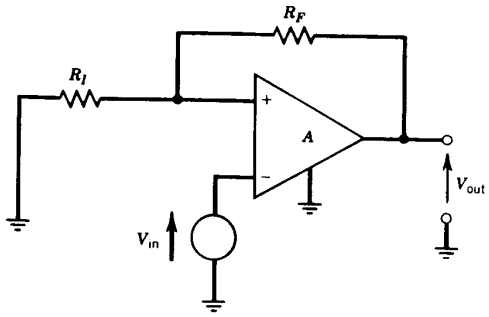

FIGURE 3.11 Positive feedback.

3.17 When the approximate expression of $M_N \approx 1/F_N$ is used in place of the exact Equation 3.6, an error in M_N will result. The fractional error of M_N is defined as

$$\frac{\Delta M_N}{M_N} \equiv \frac{M_{N,\text{approx}} - M_{N,\text{exact}}}{M_{N,\text{exact}}},$$

where $M_{N,\text{exact}}$ is M_N of Equation 3.6 and $M_{N,\text{approx}} = 1/F_N$. Show that the fractional error of M_N has a magnitude

$$\left|\frac{\Delta M_N}{M_N}\right| = \frac{1}{AF_N}.$$

3.18 When the approximate expression of $M_I \approx -1/F_I$ is used in place of the exact Equation 3.12, an error in M_I will result. The fractional error of M_I is defined as

$$\frac{\Delta M_I}{M_I} \equiv \frac{M_{I,\text{approx}} - M_{I,\text{exact}}}{M_{I,\text{exact}}},$$

where $M_{I,\text{exact}}$ is M_I of Equation 3.12 and $M_{I,\text{approx}} = -1/F_I$. Show that the fractional error of M_I has a magnitude

$$\left|\frac{\Delta M_I}{M_I}\right| = \frac{1 + F_I}{AF_I}.$$

3.19 Derive Equation 3.32.

3.20 Find V_{out}/V_{in} in the *potentiometric amplifier* of Figure 3.12. Evaluate V_{out}/V_{in} for $A_1 = A_2 = 1000$ and $R_1 = R_2 = R_3 = R_4 = 1000\,\Omega$.

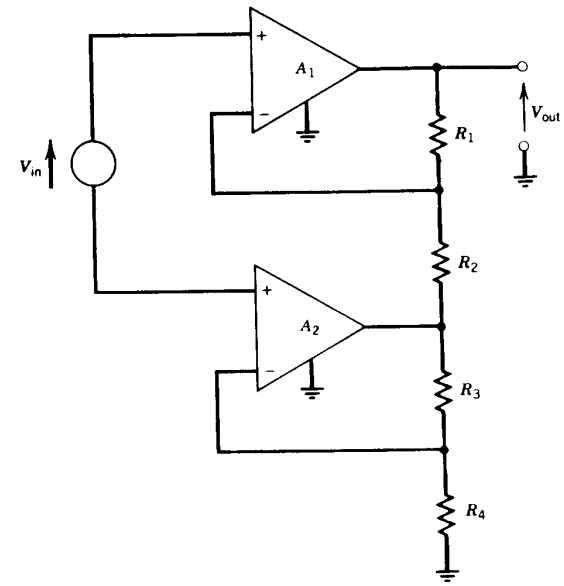

FIGURE 3.12 A potentiometric amplifier.

3.21 Show that conditions $AF_N \gg 1$ and $AF_I \gg 1 + F_I$ are equivalent, if F_N and F_I are given by Equations 3.20 and 3.21, respectively.

CHAPTER 4

Accuracy of the Amplification

Expressions for the resulting amplifications M_N and M_I derived in Chapter 3 show that they are functions of amplification A of the operational amplifier and of resistor values. It is frequently necessary to evaluate the effects on M_N and M_I of small changes in amplification A and in resistor values. Of course, this could always be performed by evaluating M_N and M_I; this process, however, can become quite tedious, particularly for small changes.

EXAMPLE 4.1. A noninverting feedback amplifier with negative feedback (Figure 3.1) uses an operational amplifier with an amplification $A = 10{,}000 \pm 1\,\%$. Resistor values are $R_I = 1000\,\Omega$ and $R_F = 9000\,\Omega$. What is the fractional change in the resulting amplification of the feedback amplifier, M_N, as a result of the 1 % change in A?

The value of feedback return F_N is

$$F_N = \frac{R_I}{R_I + R_F} = \frac{1000\,\Omega}{1000\,\Omega + 9000\,\Omega} = 0.1.$$

At the nominal value of $A = 10{,}000$, M_N becomes

$$M_{N,\text{nom}} = \frac{A}{1 + AF_N} = \frac{10{,}000}{1 + (10{,}000)(0.1)} = \frac{10{,}000}{1001} \approx 9.99.$$

At the minimum value of $A = 9900$, M_N is

$$M_{N,\min} = \frac{A}{1 + AF_N} = \frac{9900}{1 + (9900)(0.1)} = \frac{9900}{991}.$$

At the maximum value of $A = 10{,}100$, M_N becomes

$$M_{N,\max} = \frac{A}{1 + AF_N} = \frac{10{,}100}{1 + (10{,}100)(0.1)} = \frac{10{,}100}{1011}.$$

The difference between the minimum and the nominal values of M_N is

$$M_{N,\min} - M_{N,\text{nom}} = \frac{9900}{991} - \frac{10{,}000}{1001} = -\frac{100}{991{,}991} \approx -0.0001$$

and the fractional change in M_N as a result of this is

$$\frac{M_{N,\min} - M_{N,\text{nom}}}{M_{N,\text{nom}}} \approx \frac{-0.0001}{9.99} \approx -0.00001 = -0.001\,\%.$$

The difference between the maximum and the nominal values of M_N is

$$M_{N,\max} - M_{N,\text{nom}} = \frac{10{,}100}{1011} - \frac{10{,}000}{1001} = \frac{100}{1{,}012{,}011} \approx 0.0001$$

and the fractional change in M_N as a result of this is

$$\frac{M_{N,\max} - M_{N,\text{nom}}}{M_{N,\text{nom}}} \approx \frac{0.0001}{9.99} \approx 0.00001 = 0.001\,\%.$$

Thus, the resulting amplification can be written

$$M_N \approx 9.99 \pm 0.001\,\%.$$

4.1 Small Variations in Operational Amplifier Amplification

Example 4.1 illustrates how cumbersome the evaluation of the change in the resulting amplification M_N can become if variations in amplification A of the operational amplifier are small. It will be shown now that simple expressions can be obtained for the fractional changes in M_N and M_I when $|\Delta A/A| \ll 1$.

Defining

$$\Delta A \equiv A - A_{\text{nom}} \tag{4.1}$$

and

$$\Delta M \equiv M - M_{\text{nom}}, \tag{4.2}$$

where

$$M_{\text{nom}} \equiv M_{A = A_{\text{nom}}}, \tag{4.3}$$

and assuming that $\Delta A/A$ is small, that is,

$$\left|\frac{\Delta A}{A}\right| \ll 1, \tag{4.4}$$

the resulting amplification M can be expanded in a Taylor series* as

$$M = M_{\text{nom}} + \left(\frac{\partial M}{\partial A}\right)_{A = A_{\text{nom}}} (A - A_{\text{nom}}) + \frac{1}{2!}\left(\frac{\partial^2 M}{\partial A^2}\right)_{A = A_{\text{nom}}} (A - A_{\text{nom}})^2 + \cdots. \tag{4.5}$$

*The results in this chapter are derived using Taylor series expansions. It is also possible, however, to arrive at these directly—see Problems 4.14 and 4.15.

The combination of Equations 4.1, 4.2, 4.3, and 4.5 results in

$$\Delta M = \left(\frac{\partial M}{\partial A}\right)_{A = A_{\text{nom}}} \Delta A + \frac{1}{2!}\left(\frac{\partial^2 M}{\partial A^2}\right)_{A = A_{\text{nom}}} \Delta A^2 + \cdots. \tag{4.6}$$

It can be shown that, as a result of Equation 4.4, Equation 4.6 can be approximated as

$$\Delta M \approx \left(\frac{\partial M}{\partial A}\right)_{A = A_{\text{nom}}} \Delta A, \tag{4.7}$$

and thus the fractional change in the resulting amplification is approximately

$$\frac{\Delta M}{M_{\text{nom}}} = \frac{A_{\text{nom}}}{M_{\text{nom}}}\left(\frac{\partial M}{\partial A}\right)_{A = A_{\text{nom}}} \frac{\Delta A}{A_{\text{nom}}}. \tag{4.8}$$

In the case of a noninverting feedback amplifier, applying Equation 4.8 to Equation 3.6 with $M = M_N$,

$$\frac{\Delta M_N}{M_{N,\text{nom}}} = \frac{1}{1 + A_{\text{nom}} F_N} \frac{\Delta A}{A_{\text{nom}}}. \tag{4.9}$$

When feedback factor $A_{\text{nom}} F_N \gg 1$, Equation 4.9 reduces to

$$\frac{\Delta M_N}{M_{N,\text{nom}}} \approx \frac{1}{A_{\text{nom}} F_N} \frac{\Delta A}{A_{\text{nom}}}. \tag{4.10}$$

EXAMPLE 4.2. The expression of Equation 4.10 is applied to calculate again the fractional change of M_N for the preceding example, that is, for $A = 10{,}000 \pm 1\,\%$ and $F_N = 0.1$. The value of feedback factor $A_{\text{nom}} F_N = (10{,}000)(0.1) = 1000 \gg 1$; hence, the use of Equation 4.10 is justified:

$$\frac{\Delta M_N}{M_{N,\text{nom}}} \approx \frac{1}{A_{\text{nom}} F_N} \frac{\Delta A}{A_{\text{nom}}} = \frac{1}{1000} 1\,\% = 0.001\,\%.$$

The nominal value of the resulting amplification of the feedback amplifier is

$$M_{N,\text{nom}} = \frac{A_{\text{nom}}}{1 + A_{\text{nom}} F_N} = \frac{10{,}000}{1 + 1000} \approx 9.99;$$

thus, M_N can be written

$$M_N \approx 9.99 \pm 0.001\,\%.$$

In the case of an inverting feedback amplifier (Figure 3.2), by application of Equation 4.8 to Equation 3.12 with $M = M_I$,

$$\frac{\Delta M_I}{M_{I,\text{nom}}} = \frac{1 + F_I}{1 + (A_{\text{nom}} + 1) F_I} \frac{\Delta A}{A_{\text{nom}}}. \tag{4.11}$$

When feedback factor $A_{\text{nom}}F_I \gg 1 + F_I$, Equation 4.11 reduces to

$$\frac{\Delta M_I}{M_{I,\text{nom}}} \approx \frac{1 + F_I}{A_{\text{nom}}F_I}\frac{\Delta A}{A_{\text{nom}}}. \tag{4.12}$$

EXAMPLE 4.3. An inverting amplifier with negative feedback uses an operational amplifier with an amplification $A = 10{,}000 \pm 1\,\%$. Resistor values are $R_I = 1000\,\Omega$ and $R_F = 10{,}000\,\Omega$. What is the nominal value of M_I and its fractional change as a result of the 1 % error in A?

From Equation 3.13,

$$F_I = \frac{R_I}{R_F} = \frac{1000\,\Omega}{10{,}000\,\Omega} = 0.1.$$

Applying Equation 3.12, the nominal value of M_I is

$$M_{I,\text{nom}} = \frac{-A_{\text{nom}}}{1 + (A_{\text{nom}} + 1)F_I} = \frac{-10{,}000}{1 + (10{,}000 + 1)(0.1)} \approx -9.99.$$

The value of feedback factor $A_{\text{nom}}F_I = (10{,}000)(0.1) = 1000 \gg 1 + F_I = 1.1$; hence, Equation 4.12 is applicable:

$$\frac{\Delta M_I}{M_{I,\text{nom}}} \approx \frac{1 + F_I}{A_{\text{nom}}F_I}\frac{\Delta A}{A_{\text{nom}}} = \frac{1 + 0.1}{1000}\,1\,\% = 0.0011\,\%.$$

Thus, $M_I \approx -9.99 \pm 0.0011\,\%$.

4.2 Small Variations in the Feedback Resistor

Assume next that, in Figure 3.1 or 3.2, amplification A of the operational amplifier and input resistor R_I are constant and only feedback resistor R_F varies. In this case,

$$M = M_{R_F = R_{F,\text{nom}}} + \left(\frac{\partial M}{\partial R_F}\right)_{R_F = R_{F,\text{nom}}}(R_F - R_{F,\text{nom}}) + \frac{1}{2!}\left(\frac{\partial^2 M}{\partial R_F^2}\right)_{R_F = R_{F,\text{nom}}}(R_F - R_{F,\text{nom}})^2 + \cdots. \tag{4.13}$$

Defining

$$\Delta R_F \equiv R_F - R_{F,\text{nom}} \tag{4.14}$$

and using the definition given by Equation 4.2 with

$$M_{\text{nom}} \equiv M_{R_F = R_{F,\text{nom}}}, \tag{4.15}$$

Equation 4.13 becomes

$$\Delta M = \left(\frac{\partial M}{\partial R_F}\right)_{R_F = R_{F,\text{nom}}}\Delta R_F + \frac{1}{2!}\left(\frac{\partial^2 M}{\partial R_F^2}\right)_{R_F = R_{F,\text{nom}}}\Delta R_F^2 + \cdots. \tag{4.16}$$

It can be shown that for small fractional variations in feedback resistor R_F, that is, for

$$\left|\frac{\Delta R_F}{R_{F,\text{nom}}}\right| \ll 1, \tag{4.17}$$

Equation 4.16 can be approximated as

$$\Delta M \approx \left(\frac{\partial M}{\partial R_F}\right)_{R_F = R_{F,\text{nom}}}\Delta R_F, \tag{4.18}$$

and thus the fractional change in the resulting amplification is approximately

$$\frac{\Delta M}{M_{\text{nom}}} = \frac{R_{F,\text{nom}}}{M_{\text{nom}}}\left(\frac{\partial M}{\partial R_F}\right)_{R_F = R_{F,\text{nom}}}\frac{\Delta R_F}{R_{F,\text{nom}}}. \tag{4.19}$$

In the case of a noninverting feedback amplifier, applying Equations 3.2 and 3.6 to Equation 4.19 with $M = M_N$,

$$\frac{\Delta M_N}{M_{N,\text{nom}}} = M_{N,\text{nom}}F_{N,\text{nom}}(1 - F_{N,\text{nom}})\frac{\Delta R_F}{R_{F,\text{nom}}}, \tag{4.20}$$

where feedback return $F_{N,\text{nom}}$ is defined as

$$F_{N,\text{nom}} \equiv (F_N)_{R_F = R_{F,\text{nom}}} = \frac{R_I}{R_I + R_{F,\text{nom}}}. \tag{4.21}$$

In the limiting case when feedback factor $AF_{N,\text{nom}} \gg 1$, $M_{N,\text{nom}} \approx 1/F_{N,\text{nom}}$ (see Equation 3.8); hence, the fractional change in the resulting amplification becomes

$$\frac{\Delta M_N}{M_{N,\text{nom}}} \approx (1 - F_{N,\text{nom}})\frac{\Delta R_F}{R_{F,\text{nom}}}. \tag{4.22}$$

EXAMPLE 4.4. A noninverting feedback amplifier with negative feedback uses an operational amplifier with an amplification $A = 10{,}000$. Resistor values are $R_I = 1000\,\Omega$ and $R_F = 9000\,\Omega \pm 1\,\%$. What is the fractional change in the resulting amplification M_N as a result of the 1 % change in feedback resistor R_F?

The nominal value of feedback return F_N is

$$F_{N,\text{nom}} = \frac{R_I}{R_I + R_{F,\text{nom}}} = \frac{1000\,\Omega}{1000\,\Omega + 9000\,\Omega} = 0.1.$$

The value of feedback factor $AF_{N,\text{nom}} = (10{,}000)(0.1) = 1000 \gg 1$; hence, Equation 4.22 is applicable:

$$\frac{\Delta M_N}{M_{N,\text{nom}}} \approx (1 - F_{N,\text{nom}})\frac{\Delta R_F}{R_{F,\text{nom}}} = (1 - 0.1)(1\,\%) = 0.9\,\%.$$

In the case of an inverting amplifier with $A \gg 1$, it can be shown, by use of Equations 3.12 and 3.13, that with $M = M_I$ Equation 4.19 becomes

$$\frac{\Delta M_I}{M_{I,\text{nom}}} = -M_{I,\text{nom}}F_{I,\text{nom}}\frac{\Delta R_F}{R_{F,\text{nom}}}, \tag{4.23}$$

where feedback return $F_{I,\text{nom}}$ is defined as

$$F_{I,\text{nom}} \equiv (F_I)_{R_F = R_{F,\text{nom}}} = \frac{R_I}{R_{F,\text{nom}}}. \tag{4.24}$$

In the limiting case when feedback factor $AF_{I,\text{nom}} \gg 1 + F_{I,\text{nom}}$, Equation 4.23 reduces to

$$\frac{\Delta M_I}{M_{I,\text{nom}}} \approx \frac{\Delta R_F}{R_{F,\text{nom}}}. \tag{4.25}$$

EXAMPLE 4.5. An inverting feedback amplifier with negative feedback uses an operational amplifier with an amplification $A = 10{,}000$. Resistor values are $R_I = 1000\,\Omega$ and $R_F = 10{,}000\,\Omega \pm 1\,\%$. What is the fractional change in the resulting amplification M_I as a result of the 1 % change in feedback resistor R_F?

The nominal value of feedback return F_I is

$$F_{I,\text{nom}} = \frac{R_I}{R_{F,\text{nom}}} = \frac{1000\,\Omega}{10{,}000\,\Omega} = 0.1.$$

The value of feedback factor $AF_{I,\text{nom}} = (10{,}000)(0.1) = 1000 \gg 1 + F_I = 1.1$; hence, Equation 4.25 is applicable:

$$\frac{\Delta M_I}{M_{I,\text{nom}}} \approx \frac{\Delta R_F}{R_{F,\text{nom}}} = 1\,\%.$$

Since

$$M_{I,\text{nom}} = \frac{-A}{1 + (A + 1)F_{I,\text{nom}}} = \frac{-10{,}000}{1 + (10{,}000 + 1)(0.1)} \approx -9.99,$$

the resulting amplification of the feedback amplifier can be written $M_I \approx -9.99 \pm 1\,\%$.

4.3 Small Variations in the Input Resistor

In the case when amplification A of the operational amplifier and feedback resistor R_F are constant and only input resistor R_I varies, it can be shown that for a noninverting amplifier

$$\frac{\Delta M_N}{M_{N,\text{nom}}} = -M_{N,\text{nom}}F_{N,\text{nom}}(1 - F_{N,\text{nom}})\frac{\Delta R_I}{R_{I,\text{nom}}}, \tag{4.26}$$

where feedback return $F_{N,\text{nom}}$ is defined by Equation 4.21, and ΔR_I is defined as

$$\Delta R_I \equiv R_I - R_{I,\text{nom}}. \tag{4.27}$$

In the limit when feedback factor $AF_{N,\text{nom}} \gg 1$, Equation 4.26 reduces to

$$\frac{\Delta M_N}{M_{N,\text{nom}}} \approx -(1 - F_{N,\text{nom}})\frac{\Delta R_I}{R_{I,\text{nom}}}. \tag{4.28}$$

For an inverting amplifier with $A \gg 1$, it can be shown that

$$\frac{\Delta M_I}{M_{I,\text{nom}}} = M_{I,\text{nom}}F_{I,\text{nom}}\frac{\Delta R_I}{R_{I,\text{nom}}}. \tag{4.29}$$

In the limiting case when feedback factor $AF_{I,\text{nom}} \gg 1 + F_{I,\text{nom}}$, Equation 4.29 reduces to

$$\frac{\Delta M_I}{M_{I,\text{nom}}} \approx -\frac{\Delta R_I}{R_{I,\text{nom}}}. \tag{4.30}$$

4.4 Several Sources of Variations

The preceding sections of this chapter computed the errors in the resulting amplification that originate from variations in operational amplifier amplification A and from variations in resistor values. It was found that the fractional error originating from variations in A may be reduced by increasing the value of A; however, errors originating from resistor variations may be reduced only by improving the accuracy of the resistors. In this section, multivariable Taylor series expansion is applied to find the error originating from simultaneous variations in operational amplifier amplification and in resistor values.

If amplification A of the operational amplifier, feedback resistor R_F, and input resistor R_I vary, the resulting amplification M of the feedback amplifier can be expressed in a multivariable Taylor series as

$$M = M_{\text{nom}} + \left(\frac{\partial M}{\partial A}\right)(A - A_{\text{nom}}) + \left(\frac{\partial M}{\partial R_F}\right)(R_F - R_{F,\text{nom}}) + \left(\frac{\partial M}{\partial R_I}\right)(R_I - R_{I,\text{nom}}) + \cdots, \tag{4.31}$$

where all partial derivatives have to be evaluated at $A = A_{\text{nom}}$, $R_F = R_{F,\text{nom}}$, $R_I = R_{I,\text{nom}}$.

If fractional changes in A, R_F, and R_I are small, then from Equation 4.31 and with the definitions of Equations 4.1, 4.2, 4.14, and 4.27, the change in M can be approximated as

$$\Delta M \approx \left(\frac{\partial M}{\partial A}\right)\Delta A + \left(\frac{\partial M}{\partial R_F}\right)\Delta R_F + \left(\frac{\partial M}{\partial R_I}\right)\Delta R_I, \tag{4.32}$$

where the partial derivatives again have to be evaluated at $A = A_{\text{nom}}$, $R_F = R_{F,\text{nom}}$, $R_I = R_{I,\text{nom}}$.

In the case of a noninverting amplifier with a feedback factor $A_{\text{nom}}F_{N,\text{nom}} \gg 1$, the application of Equations 4.10, 4.22, and 4.28 to Equation 4.32 with $M = M_N$ results in a fractional change

$$\frac{\Delta M_N}{M_N} \approx \frac{1}{A_{\text{nom}}F_{N,\text{nom}}}\frac{\Delta A}{A_{\text{nom}}} + (1 - F_{N,\text{nom}})\frac{\Delta R_F}{R_{F,\text{nom}}} - (1 - F_{N,\text{nom}})\frac{\Delta R_I}{R_{I,\text{nom}}}. \tag{4.33}$$

In many cases it is important to find the worst-case $\Delta M_N/M_N$, which is the maximum of its absolute value:

$$\max\left|\frac{\Delta M_N}{M_N}\right| \approx \left|\frac{1}{A_{\text{nom}}F_{N,\text{nom}}}\frac{\Delta A}{A_{\text{nom}}}\right| + \left|(1 - F_{N,\text{nom}})\frac{\Delta R_F}{R_{F,\text{nom}}}\right| + \left|(1 - F_{N,\text{nom}})\frac{\Delta R_I}{R_{I,\text{nom}}}\right|. \tag{4.34}$$

EXAMPLE 4.6. A noninverting amplifier with negative feedback uses an operational amplifier with an amplification $A = 100{,}000 \pm 10\,\%$. Resistor values are $R_I = 100\,\Omega \pm 0.1\,\%$ and $R_F = 100{,}000\,\Omega \pm 0.1\,\%$. Hence,

$$F_{N,\text{nom}} = \frac{R_{I,\text{nom}}}{R_{I,\text{nom}} + R_{F,\text{nom}}} = \frac{100\,\Omega}{100\,\Omega + 100{,}000\,\Omega} \approx 0.001,$$

and feedback factor $A_{\text{nom}}F_{N,\text{nom}} \approx (100{,}000)(0.001) = 100 \gg 1$; thus, Equation 4.34 is applicable. The worst-case fractional error in M_N is therefore

$$\max\left|\frac{\Delta M_N}{M_N}\right| \approx \left|\frac{1}{100}(10\,\%)\right| + |(1 - 0.001)(0.1\,\%)| + |(1 - 0.001)(0.1\,\%)| \approx 0.3\,\%.$$

Similarly, in the case of an inverting amplifier with a feedback factor $A_{\text{nom}}F_{I,\text{nom}} \gg 1 + F_{I,\text{nom}}$, the application of Equations 4.12, 4.25, and 4.30 to Equation 4.32 with $M = M_I$ results in

$$\frac{\Delta M_I}{M_I} \approx \frac{1 + F_{I,\text{nom}}}{A_{\text{nom}}F_{I,\text{nom}}}\frac{\Delta A}{A_{\text{nom}}} + \frac{\Delta R_F}{R_{F,\text{nom}}} - \frac{\Delta R_I}{R_{I,\text{nom}}}. \tag{4.35}$$

Again, it is of importance to find the worst-case $\Delta M_I/M_I$, which is the maximum of its absolute value:

$$\max\left|\frac{\Delta M_I}{M_I}\right| \approx \left|\frac{1 + F_{I,\text{nom}}}{A_{\text{nom}}F_{I,\text{nom}}}\frac{\Delta A}{A_{\text{nom}}}\right| + \left|\frac{\Delta R_F}{R_{F,\text{nom}}}\right| + \left|\frac{\Delta R_I}{R_{I,\text{nom}}}\right|. \tag{4.36}$$

PROBLEMS

4.1 The Type 725C operational amplifier has its amplification A specified as follows: The minimum value of A is 250,000, the typical value of A is 3,000,000, and no maximum value of A is specified.

The operational amplifier is used in a noninverting feedback amplifier with $R_I = 10\,\Omega$ and $R_F = 100\,\text{k}\Omega$. Find the range of the resulting amplification M_N, if the errors of resistors R_I and R_F are negligibly small. [*Hint:* Proceed similarly to Example 4.1; do not use the results of Section 4.1, because they are valid only for $|\Delta A/A| \ll 1$.]

4.2 Retain the second-order term in the expansion of Equation 4.6 and show that the magnitude of the fractional error of Equation 4.9 is less than $|\Delta A/A_{\text{nom}}|$.

4.3 A noninverting amplifier with negative feedback uses an operational amplifier with an amplification $A = 20{,}000 \pm 10\,\%$. Resistor values are $R_I = 200\,\Omega$ and $R_F = 1800\,\Omega$. Find the nominal value of the resulting amplification M_N and its error resulting from the 10 % change in A.

4.4 Apply Equation 4.10 to the case of the voltage follower. What is the fractional error in the resulting amplification M_N, if the operational amplifier used has an amplification $A = 10{,}000 \pm 10\,\%$?

4.5 In the noninverting amplifier of Figure 3.1, $A = 20{,}000 \pm 20\,\%$, $R_I = 100\,\Omega \pm 1\,\%$, and $R_F = 10{,}000\,\Omega \pm 1\,\%$. Find the nominal value of the resulting amplification M_N and its worst-case fractional error in percent.

4.6 In the noninverting amplifier of Figure 3.1, $A = 20{,}000 \pm 20\,\%$, $R_I = 100\,\Omega \pm 0.1\,\%$, and $R_F = 10{,}000\,\Omega \pm 0.1\,\%$. Find the nominal value of the resulting amplification M_N and its worst-case fractional error in percent. Compare the result to that of Problem 4.5.

4.7 In the noninverting amplifier of Figure 3.1, $A = 10{,}000 \pm 20\,\%$, $R_F = 10{,}000\,\Omega \pm 1\,\%$, and input resistor R_I is adjustable between its minimum of $R_{I,\min}$ and its maximum of $R_{I,\max}$. Find the maximum value of $R_{I,\min}$ and the minimum value of $R_{I,\max}$ such that M_N can always be adjusted to equal 100.

4.8 In the inverting amplifier of Figure 3.2, $A = 100 \pm 10\,\%$, $R_I = 100\,\Omega \pm 1\,\%$, and $R_F = 10{,}000\,\Omega \pm 1\,\%$. Find the nominal value of the resulting amplification M_I and its worst-case fractional error in percent.

4.9 In the inverting amplifier of Figure 3.2, $A = 10{,}000$ and $R_I = 101\,\Omega$. Find the value of feedback resistor R_F such that the resulting amplification $M_I = 100$.

4.10 In the noninverting amplifier of Figure 3.1, $A = 10{,}000$, $R_I = 100\,\Omega$, and $R_F = 10{,}000\,\Omega$. Find the value of $\Delta M_N/M_N$ if the values of both R_I and R_F increase by 10 %.

4.11 Consider the compound differential amplifier of Figure 3.10 with components and input voltages as given in Problem 3.15 of Chapter 3. Find the worst-case fractional change in the output voltage V_{out}, if each resistor can vary by as much as $\pm 1\,\%$.

4.12 In the amplifier with positive feedback shown in Figure 3.11, $A = 100 \pm 0.1\,\%$, $R_I = 100\,\Omega$, and $R_F = 10{,}000\,\Omega$. Estimate the value of $|\Delta M/M|$ resulting from the 0.1 % change in A.

4.13 Find the worst-case error resulting from variations in R_1, R_2, R_3, R_F, and R_I in the instrumentation amplifier of Example 3.8. Assume that the amplifications of the operational amplifiers can be approximated as $A_1 \to \infty$, $A_2 \to \infty$, and $A_3 \to \infty$, and that each resistor has a tolerance of $\pm 0.1\,\%$.

4.14 Use Equations 3.6, 4.1, 4.2, 4.3, and 4.4, with $M = M_N$, and derive Equation 4.9 without using Taylor series expansion.

4.15 Use Equations 3.2, 3.6, 4.2, 4.14, 4.15, and 4.17, with $M = M_N$, and derive Equation 4.20 without using Taylor series expansion.

4.16 Derive Equations 4.9, 4.11, 4.20, 4.23, 4.26, and 4.29.

CHAPTER 5

Frequency Response and Transient Response of Operational Amplifiers, Part I

Thus far it has been assumed that amplification A of the operational amplifier is a positive real number. This assumption becomes untenable when frequency response and transient response have to be determined, because a real amplification A would entail infinite bandwidths, zero rise times, and zero delay times—all physically impossible. This chapter and Chapter 6 describe representations of amplification A, as well as of feedback return F that are suitable for frequency responses and transient responses.

5.1 Lag Networks

The *lag network* of Figure 5.1 often provides a reasonable approximation of an amplifier stage in an operational amplifier.* Variables I_{in} and V_{out} are, respectively, a current signal such as the collector current output of a transistor stage and a voltage signal such as the voltage input to the next stage.

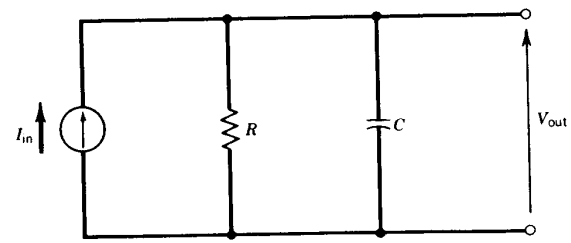

FIGURE 5.1 A lag network.

*An alternative configuration of the lag network is given in Figure 5.8, page 56.

5.1.1 Frequency Response of Lag Networks

When I_{in} and V_{out} are decomposed into sinusoidal (sine and cosine) waveforms in the frequency domain, then for each component at *angular frequency* ω the *transfer function* can be written

$$\frac{V_{out}(\omega)}{I_{in}(\omega)} = \frac{R}{1 + j\omega RC}, \tag{5.1}$$

where angular frequency ω is related to *cyclic frequency* f:

$$\omega = 2\pi f. \tag{5.2}$$

By defining a *corner frequency* (or *pole frequency*) f_0 as

$$f_0 \equiv \frac{1}{2\pi RC}, \tag{5.3}$$

the transfer function of Equation 5.1 can be written

$$\frac{V_{out}(f)}{I_{in}(f)} = \frac{R}{1 + jf/f_0}. \tag{5.4}$$

EXAMPLE 5.1. In the circuit of Figure 5.1, I_{in} is a sinusoidal waveform with a frequency $f = 10$ MHz; $R = 10{,}000\ \Omega$ and $C = 10$ pF. Thus, from Equation 5.3,

$$f_0 = \frac{1}{2\pi RC} = \frac{1}{2\pi(10{,}000)(10^{-11})} = 1.59 \text{ MHz},$$

and the transfer function of Equation 5.4 becomes

$$\frac{V_{out}(f)}{I_{in}(f)} = \frac{10{,}000\ \Omega}{1 + j(10 \text{ MHz}/1.59 \text{ MHz})} = \frac{10{,}000\ \Omega}{1 + j6.28}.$$

It is of interest to determine the magnitude and the phase of the transfer function. From Equation 5.4, the magnitude is

$$\left|\frac{V_{out}(f)}{I_{in}(f)}\right| = \left|\frac{R}{1 + jf/f_0}\right| = \frac{R}{\sqrt{1 + (f/f_0)^2}}, \tag{5.5}$$

and the phase φ is

$$\varphi \equiv \angle\frac{V_{out}(f)}{I_{in}(f)} = \angle\frac{R}{1 + jf/f_0}$$
$$= -\arctan\left(\frac{f}{f_0}\right) = -\frac{\pi}{2} + \arctan\left(\frac{f_0}{f}\right). \tag{5.6}$$

EXAMPLE 5.2. In the circuit of Figure 5.1, $R = 10{,}000\ \Omega$, $f = 10$ MHz, and $f_0 = 1.59$ MHz. By use of Equation 5.5, the magnitude of the transfer function is

$$\left|\frac{V_{out}(f)}{I_{in}(f)}\right| = \frac{R}{\sqrt{1 + (f/f_0)^2}}$$
$$= \frac{10{,}000\ \Omega}{\sqrt{1 + (10 \text{ MHz}/1.59 \text{ MHz})^2}} = 1572\ \Omega.$$

Thus, if $I_{in}(f)$ has a magnitude of 1 mA, the magnitude of $V_{out}(f)$ is $(1 \text{ mA})(1572\ \Omega) \cong 1.57$ V. The phase φ, from Equation 5.6, is

$$\varphi = -\arctan\left(\frac{f}{f_0}\right) = -\arctan\left(\frac{10 \text{ MHz}}{1.59 \text{ MHz}}\right)$$
$$= -81°.$$

For certain ranges of f/f_0, Equations 5.5 and 5.6 can be approximated by simpler expressions. For small values of f/f_0, several approximations of the magnitude given by Equation 5.5 are possible. One of these is a binomial expansion:

$$\left|\frac{V_{out}(f)}{I_{in}(f)}\right| \approx R\left[1 - \frac{1}{2}\left(\frac{f}{f_0}\right)^2\right], \qquad \left(\frac{f}{f_0}\right)^2 \ll 1. \tag{5.7}$$

Another approximation of Equation 5.5 for small values of f/f_0 results from a logarithmic expansion:

$$\left|\frac{V_{out}(f)}{I_{in}(f)}\right| \approx R\,e^{-\frac{1}{2}(f/f_0)^2}, \qquad \left(\frac{f}{f_0}\right)^2 \ll 1. \tag{5.8}$$

For large values of f/f_0, Equation 5.5 can be approximated as

$$\left|\frac{V_{out}(f)}{I_{in}(f)}\right| \approx R\frac{f_0}{f}, \qquad \left(\frac{f}{f_0}\right)^2 \gg 1. \tag{5.9}$$

The phase φ of Equation 5.6 can be approximated for small values of f/f_0 as

$$\varphi \approx -\frac{f}{f_0}, \qquad \frac{f}{f_0} \ll 1, \tag{5.10}$$

and for large values of f/f_0 as

$$\varphi \approx -\frac{\pi}{2} + \frac{f_0}{f}, \qquad \frac{f}{f_0} \gg 1. \tag{5.11}$$

EXAMPLE 5.3. In the circuit of Figure 5.1, $f_0 = 1/2\pi RC = 1$ MHz. At a frequency $f = 0.1$ MHz, $f/f_0 = 0.1$. A first approximation of the magnitude of the transfer function, from Equation 5.7, is

$$\left|\frac{V_{out}(f)}{I_{in}(f)}\right| \approx R.$$

A better approximation, from Equation 5.7, is

$$\left|\frac{V_{out}(f)}{I_{in}(f)}\right| \approx R\left[1 - \frac{1}{2}\left(\frac{f}{f_0}\right)^2\right] = R[1 - \tfrac{1}{2}(0.1)^2] = 0.995R,$$

or, from Equation 5.8,

$$\left|\frac{V_{out}(f)}{I_{in}(f)}\right| \approx R\,e^{-\frac{1}{2}(f/f_0)^2}$$
$$= R\,e^{-\frac{1}{2}(0.1)^2} = 0.99501R.$$

The exact magnitude is given by Equation 5.5 as

$$\left|\frac{V_{out}(f)}{I_{in}(f)}\right| = \frac{R}{\sqrt{1 + (f/f_0)^2}} = \frac{R}{\sqrt{1 + (0.1)^2}} = 0.995037R.$$

The value of phase φ can be approximated from Equation 5.10 as

$$\varphi \approx -\frac{f}{f_0} = -0.1 \text{ radians} = -5.73°.$$

The exact value of phase φ, from Equation 5.6, is

$$\varphi = -\arctan\left(\frac{f}{f_0}\right) = -\arctan(0.1) = -5.71°.$$

5.1.2 Transient Response of Lag Networks

When V_{out} and I_{in} are represented in the time domain, that is, $V_{out} = V_{out}(t)$ and $I_{in} = I_{in}(t)$, it can be shown that the ratio of their Laplace transforms can be written

$$\frac{\mathscr{L}\{V_{out}(t)\}}{\mathscr{L}\{I_{in}(t)\}} = \frac{R}{1 + RCs}, \tag{5.12}$$

where s is the Laplace transform variable in the transform domain.

EXAMPLE 5.4 In the circuit of Figure 5.1, $R = 1000\,\Omega$ and current I_{in} is a function of time, $I_{in}(t) = (1\text{ mA})u(t)$; that is, it is a step function with a magnitude of 1 mA. The Laplace transform of $I_{in}(t)$ is

$$\mathscr{L}\{I_{in}(t)\} = \mathscr{L}\{(1\text{ mA})u(t)\} = (1\text{ mA})\mathscr{L}\{u(t)\} = \frac{1\text{ mA}}{s}.$$

Thus, the Laplace transform of voltage $V_{out}(t)$ is given by

$$\mathscr{L}\{V_{out}(t)\} = \frac{R}{1 + RCs}\mathscr{L}\{I_{in}(t)\} = \frac{1000\,\Omega}{1 + RCs}\frac{1\text{ mA}}{s} = \frac{1\text{ V}}{s(1 + RCs)}.$$

The inverse Laplace transform of this is (see Problem 5.12)

$$V_{out}(t) = \mathscr{L}^{-1}\left\{\frac{1\text{ V}}{s(1 + RCs)}\right\} = (1\text{ V})(1 - e^{-t/RC}), \qquad t > 0;$$
$$V_{out}(t) = 0, \qquad t < 0.$$

Figure 5.2 shows input current I_{in} and output voltage V_{out} as functions of t/RC.

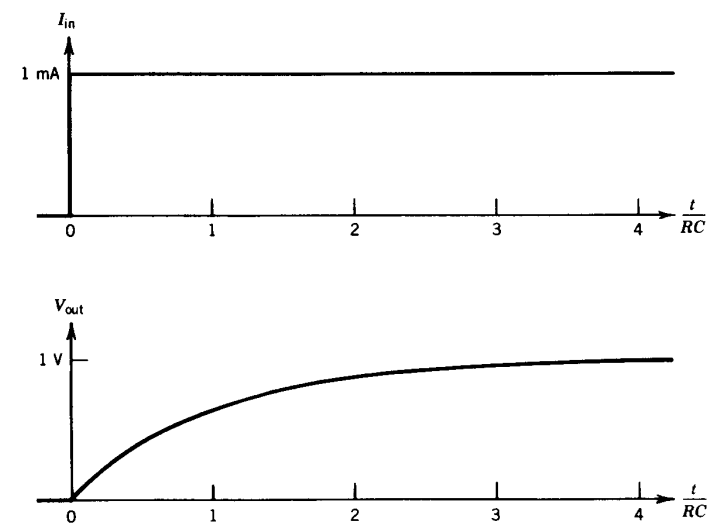

FIGURE 5.2 Input current I_{in} and output voltage V_{out} as functions of t/RC in the lag network of Example 5.4.

5.2 Bode Plots

It is customary to plot the *gain G of the lag network*, which can be defined as

$$G \equiv 20\,\text{dB}\ \log_{10} \frac{1}{\sqrt{1 + (f/f_0)^2}},$$

where G is in *decibels* (dB) as shown in the upper part of Figure 5.3.

This representation, known as the *Bode plot of the gain*, shows that at $f/f_0 = 1$ the gain G is down by 3 dB from its value at $f = 0$. Also, for $f \gg f_0$, the gain drops at a rate of -20 dB/decade of frequency, or approximately -6 dB/octave.

In many cases, the gain can be approximated by two straight lines: $G = G_{f=0}$ for $f \ll f_0$, and $G = G_{f=0} - 20\,\text{dB}\ \log_{10}(f/f_0)$ for $f \gg f_0$. These two straight lines intersect at the frequency $f = f_0$; hence the name corner frequency. This *piecewise linear approximation* of the gain is shown in Figure 5.3 by broken lines. The *Bode plot of phase* φ as a function of frequency is also given in the figure.

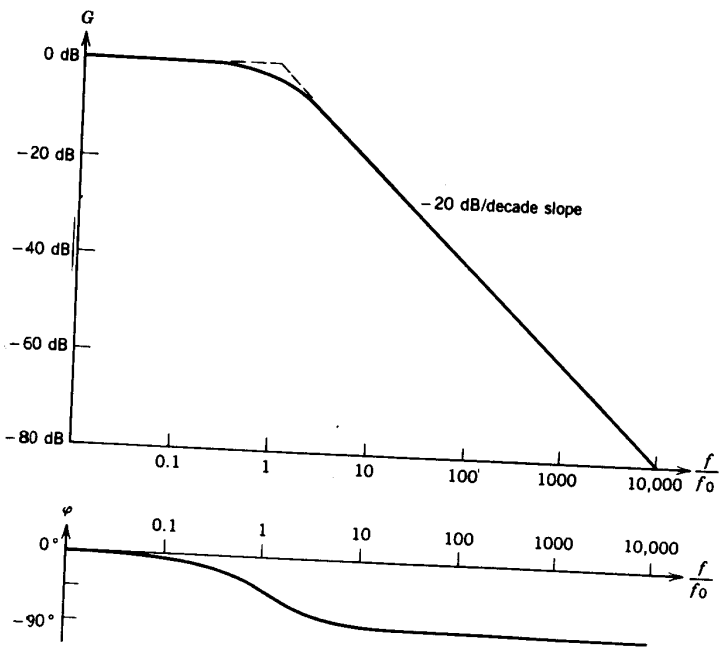

FIGURE 5.3 Bode plots $G \equiv 20\,\text{dB}\ \log_{10}[1 + (f/f_0)^2]^{-1/2}$ and $\varphi \equiv \angle(1 + jf/f_0)^{-1}$ of a lag network.

5.3 Cascaded Lag Networks

The lag network of Figure 5.1 provides a simple approximation of a stage in an operational amplifier. However, usually more than one stage has to be represented. Fortunately, these can often be separated, and the resulting transfer function can be written as a product of lag-network responses.

5.3.1 Frequency Response of Cascaded Lag Networks

In the frequency domain, the transfer function of a two-stage amplifier can be written in the form

$$(\text{constant})\left(\frac{1}{1 + jf/f_1}\right)\left(\frac{1}{1 + jf/f_2}\right).$$

In Figure 5.1, a current input and a voltage output were assumed. In the case when an entire operational amplifier is to be represented, both the input and the output signals are voltages. Hence, amplification A of an operational amplifier consisting of two stages can be written

$$A = \frac{A_{dc}}{(1 + jf/f_1)(1 + jf/f_2)}, \tag{5.13}$$

where $A_{dc} \equiv A_{f=0}$ is the amplification of the operational amplifier at zero frequency: a positive real dimensionless number.

EXAMPLE 5.5. A two-stage operational amplifier has an amplification at zero frequency $A_{dc} = 1000$ and it can be represented by two separated lag networks. One of these consists of a 100,000-Ω resistance and a 5-pF capacitance, the other one of a 1000-Ω resistance and a 5-pF capacitance. Since the designations of f_1 and f_2 are interchangeable, they can be written

$$f_1 = \frac{1}{2\pi(100{,}000)(5 \times 10^{-12})} = 318\,\text{kHz}$$

and

$$f_2 = \frac{1}{2\pi(1000)(5 \times 10^{-12})} = 31.8\,\text{MHz}.$$

Thus, amplification A becomes

$$A = \frac{1000}{(1 + jf/318\,\text{kHz})(1 + jf/31.8\,\text{MHz})}.$$

In general, the *gain* is defined as $G \equiv 20\,\text{dB}\ \log_{10}|A|$, and the phase as $\varphi = \underline{/A}$. The gain and the phase plots of a two-stage amplifier described by Equation 5.13 with $f_2/f_1 = 100$ and $A_{dc} = 1000$ are shown in Figure 5.4. Since the logarithm of a product is the sum of the logarithms, the gain is obtained as the sum of the individual gains of the two stages. The individual phases of the two stages are added linearly to obtain the resulting phase. It can be seen that for $f \gg f_2 \geqslant f_1$ the gain falls off at a rate of -40 dB/decade of frequency.

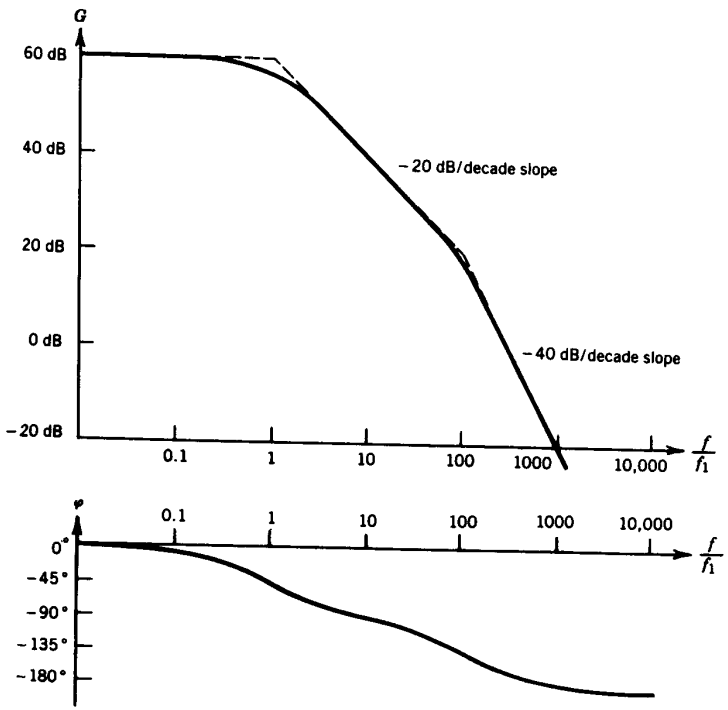

FIGURE 5.4 Bode plots $G \equiv 20\,\text{dB}\ \log_{10}|A|$ and $\varphi \equiv \underline{/A}$ for the two-stage operational amplifier of Equation 5.13 with $A_{dc} = 1000$ and $f_2 = 100f_1$.

Figure 5.5 shows the special case of two equal corner frequencies $f_1 = f_2$, that is, the case of

$$A = \frac{A_{dc}}{(1 + jf/f_1)^2}. \tag{5.14}$$

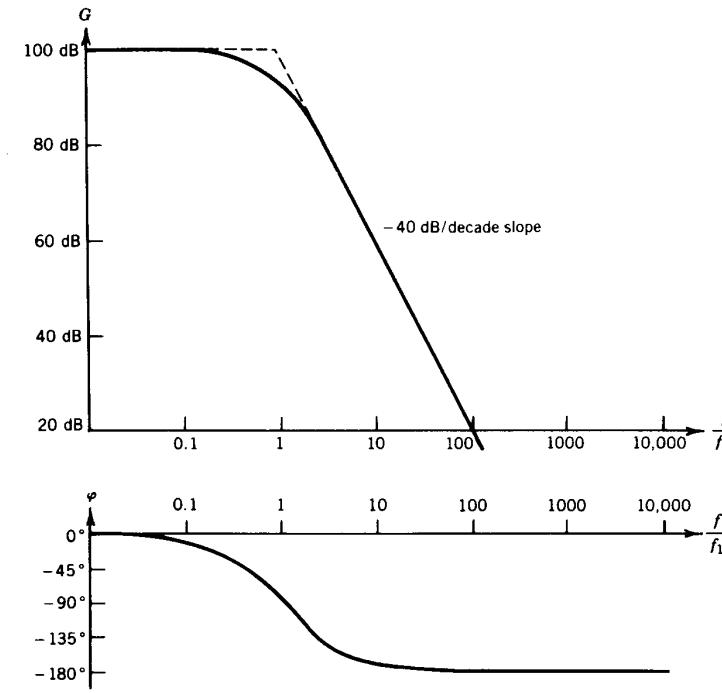

FIGURE 5.5 Bode plots $G \equiv 20\,\text{dB}\ \log_{10}|A|$ and $\varphi \equiv \underline{/A}$ for an operational amplifier with $A_{dc} = 100{,}000$ and with two equal corner frequencies.

For a three-stage amplifier, Equation 5.13 can be extended to

$$A = \frac{A_{dc}}{(1 + jf/f_1)(1 + jf/f_2)(1 + jf/f_3)}, \tag{5.15}$$

and to similar expressions for larger numbers of stages.

EXAMPLE 5.6. In Equation 5.15, $f_1 = 1$ MHz, $f_2 = 4$ MHz, $f_3 = 40$ MHz, and $A_{dc} = 10{,}000$. What is magnitude $|A|$ and phase $\underline{/A}$ at a frequency $f = 0.1$ MHz?

The magnitude of A is

$$|A| = \frac{|A_{dc}|}{|1 + jf/f_1||1 + jf/f_2||1 + jf/f_3|}.$$

By use of Equations 5.5 and 5.7,

$$\frac{1}{|1 + jf/f_1|} \approx 1 - \frac{1}{2}\left(\frac{f}{f_1}\right)^2 = 1 - \tfrac{1}{2}(0.1)^2 = 0.995,$$

$$\frac{1}{|1 + jf/f_2|} \approx 1 - \frac{1}{2}\left(\frac{f}{f_2}\right)^2 = 1 - \frac{1}{2}\left(\frac{0.1}{4}\right)^2 = 0.9997,$$

and

$$\frac{1}{|1 + jf/f_3|} \approx 1 - \frac{1}{2}\left(\frac{f}{f_3}\right)^2 = 1 - \frac{1}{2}\left(\frac{0.1}{40}\right)^2 = 0.999997;$$

thus, $|A| \approx (10{,}000)(0.995)(0.9997)(0.999997) \cong 9947$.

The phase of A, $\underline{/A}$, can be obtained by adding the individual phases:

$$\underline{/A} = \underline{/A_{dc}} + \underline{\left/\frac{1}{1 + jf/f_1}\right.} + \underline{\left/\frac{1}{1 + jf/f_2}\right.} + \underline{\left/\frac{1}{1 + jf/f_3}\right.}.$$

By applying Equation 5.6, this can be written

$$\underline{/A} = -\arctan\left(\frac{f}{f_1}\right) - \arctan\left(\frac{f}{f_2}\right) - \arctan\left(\frac{f}{f_3}\right),$$

which by use of the approximation of Equation 5.10 becomes

$$\underline{/A} \approx -\frac{f}{f_1} - \frac{f}{f_2} - \frac{f}{f_3} = -\frac{0.1}{1} - \frac{0.1}{4} - \frac{0.1}{40}$$
$$= -0.1275 \text{ radians} = -7.3°.$$

5.3.2 Transient Response of Cascaded Lag Networks

When input voltage V_{in} and output voltage V_{out} in a two-stage operational amplifier are represented in the time domain,

$$\frac{\mathscr{L}\{V_{out}(t)\}}{\mathscr{L}\{V_{in}(t)\}} = \frac{A_{dc}}{(1 + s\tau_1)(1 + s\tau_2)}, \tag{5.16a}$$

where

$$\tau_1 = \frac{1}{2\pi f_1} \tag{5.16b}$$

and

$$\tau_2 = \frac{1}{2\pi f_2}, \tag{5.16c}$$

with f_1 and f_2 those of Equation 5.13.

When input voltage V_{in} is a step function with magnitude V_0,

$$\mathscr{L}\{V_{in}(t)\} = \frac{V_0}{s} \tag{5.17}$$

and

$$\mathscr{L}\{V_{out}(t)\} = \frac{1}{s}\frac{A_{dc}V_0}{(1 + s\tau_1)(1 + s\tau_2)}. \tag{5.18}$$

The inverse Laplace transform of Equation 5.18 can be written for times $t > 0$ as

$$V_{out}(t) = A_{dc}V_0\left[1 - \frac{\dfrac{e^{-t/\tau_1}}{\tau_2} - \dfrac{e^{-t/\tau_2}}{\tau_1}}{\dfrac{1}{\tau_2} - \dfrac{1}{\tau_1}}\right], \tag{5.19a}$$

provided that

$$\tau_1 \neq \tau_2. \tag{5.19b}$$

EXAMPLE 5.7. In the two-stage operational amplifier of Example 5.5, $A_{dc} = 1000$. Also, $f_1 = 0.318$ MHz and $f_2 = 31.8$ MHz. Thus, by use of Equation 5.16b,

$$\tau_1 = \frac{1}{2\pi f_1} = \frac{1}{2\pi(0.318 \text{ MHz})} = 0.5\ \mu\text{s} = 500 \text{ ns}.$$

Also, by use of Equation 5.16c,

$$\tau_2 = \frac{1}{2\pi f_2} = \frac{1}{2\pi(31.8\,\text{MHz})} = 5\,\text{ns}.$$

Equation 5.19 can be applied, resulting in

$$V_{out}(t) = 1000V_0\left[1 - \frac{\dfrac{e^{-t/500\,\text{ns}}}{5\,\text{ns}} - \dfrac{e^{-t/5\,\text{ns}}}{500\,\text{ns}}}{\dfrac{1}{5\,\text{ns}} - \dfrac{1}{500\,\text{ns}}}\right], \qquad t > 0;$$

which can also be written

$$V_{out}(t) = 1000V_0\left(1 - \frac{e^{-t/500\,\text{ns}} - 0.01e^{-t/5\,\text{ns}}}{0.99}\right), \qquad t > 0.$$

Thus, as a result of having $\tau_1 = 500\,\text{ns} \gg \tau_2 = 5\,\text{ns}$, in this example time constant $\tau_1 = 500\,\text{ns}$ dominates the transient response. Therefore, for times $t \gg 5\,\text{ns}$, output voltage V_{out} can be approximated as

$$V_{out}(t) \approx 1000V_0(1 - e^{-t/500\,\text{ns}}).$$

In the special case of a two-stage operational amplifier with two equal corner frequencies, shown in Equation 5.14 and Figure 5.5,

$$\frac{\mathscr{L}\{V_{out}(t)\}}{\mathscr{L}\{V_{in}(t)\}} = \frac{A_{dc}}{(1 + s\tau_1)^2}, \tag{5.20a}$$

where

$$\tau_1 = \frac{1}{2\pi f_1} \tag{5.20b}$$

with f_1 that of Equation 5.14.

When input voltage V_{in} is a step function with magnitude V_0,

$$\mathscr{L}\{V_{in}(t)\} = \frac{V_0}{s} \tag{5.21}$$

and

$$\mathscr{L}\{V_{out}(t)\} = \frac{1}{s}\frac{A_{dc}V_0}{(1 + s\tau_1)^2}. \tag{5.22}$$

The inverse Laplace transform of Equation 5.22 can be written for times $t > 0$ as

$$V_{out}(t) = A_{dc}V_0\left[1 - \left(1 + \frac{t}{\tau_1}\right)e^{-t/\tau_1}\right]. \tag{5.23}$$

Figure 5.6 shows V_{out} as a function of t/τ_1.

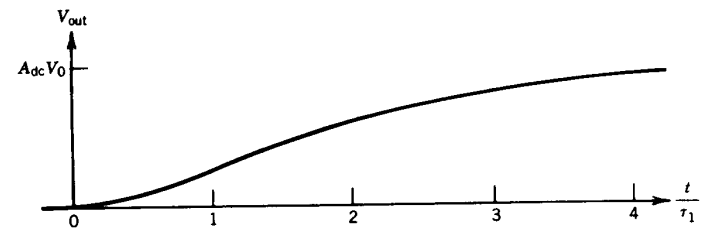

FIGURE 5.6 Output voltage V_{out} as a function of t/τ_1 for a two-stage operational amplifier with two equal corner frequencies.

When input voltage V_{in} and output voltage V_{out} of a three-stage operational amplifier are represented in the time domain,

$$\frac{\mathscr{L}\{V_{out}(t)\}}{\mathscr{L}\{V_{in}(t)\}} = \frac{A_{dc}}{(1 + s\tau_1)(1 + s\tau_2)(1 + s\tau_3)}, \tag{5.24a}$$

where

$$\tau_1 = \frac{1}{2\pi f_1}, \tag{5.24b}$$

$$\tau_2 = \frac{1}{2\pi f_2}, \tag{5.24c}$$

and

$$\tau_3 = \frac{1}{2\pi f_3}, \tag{5.24d}$$

with f_1, f_2, and f_3 those of Equation 5.15.

When input voltage V_{in} is a step function with magnitude V_0,

$$\mathscr{L}\{V_{in}(t)\} = \frac{V_0}{s} \tag{5.25}$$

and

$$\mathscr{L}\{V_{out}(t)\} = \frac{1}{s}\frac{A_{dc}V_0}{(1 + s\tau_1)(1 + s\tau_2)(1 + s\tau_3)}. \tag{5.26}$$

The inverse Laplace transform of Equation 5.26 can be written for times $t > 0$ as

$$V_{out}(t) = A_{dc}V_0\left[1 - \frac{\dfrac{\dfrac{1}{\tau_3}-\dfrac{1}{\tau_2}}{\tau_3\tau_2}e^{-t/\tau_1} + \dfrac{\dfrac{1}{\tau_1}-\dfrac{1}{\tau_3}}{\tau_1\tau_3}e^{-t/\tau_2} + \dfrac{\dfrac{1}{\tau_2}-\dfrac{1}{\tau_1}}{\tau_2\tau_1}e^{-t/\tau_3}}{\left(\dfrac{1}{\tau_1}-\dfrac{1}{\tau_2}\right)\left(\dfrac{1}{\tau_2}-\dfrac{1}{\tau_3}\right)\left(\dfrac{1}{\tau_3}-\dfrac{1}{\tau_1}\right)}\right], \quad (5.27a)$$

provided that

$$\tau_1 \neq \tau_2, \quad (5.27b)$$

$$\tau_2 \neq \tau_3, \quad (5.27c)$$

and

$$\tau_3 \neq \tau_1. \quad (5.27d)$$

EXAMPLE 5.8. In the three-stage operational amplifier of Example 5.6, $A_{dc} = 10{,}000$. Also, $f_1 = 1$ MHz, $f_2 = 4$ MHz, and $f_3 = 40$ MHz. Thus, by use of Equations 5.24b, 5.24c, and 5.24d,

$$\tau_1 = \frac{1}{2\pi f_1} = \frac{1}{2\pi(1\text{ MHz})} \approx 160\text{ ns},$$

$$\tau_2 = \frac{1}{2\pi f_2} = \frac{1}{2\pi(4\text{ MHz})} \approx 40\text{ ns},$$

and

$$\tau_3 = \frac{1}{2\pi f_3} = \frac{1}{2\pi(40\text{ MHz})} \approx 4\text{ ns}.$$

Equation 5.27a can be applied, resulting in

$$V_{out}(t) = 10{,}000V_0\left[1 - \frac{e^{-t/160\text{ ns}}}{\left(1-\frac{1}{4}\right)\left(1-\frac{1}{40}\right)} + \frac{e^{-t/40\text{ ns}}}{4\left(1-\frac{1}{4}\right)\left(1-\frac{1}{10}\right)} - \frac{e^{-t/4\text{ ns}}}{400\left(1-\frac{1}{10}\right)\left(1-\frac{1}{40}\right)}\right], \quad t > 0.$$

For times $t \gg 4$ ns, output voltage V_{out} can be approximated as

$$V_{out}(t) \approx 10{,}000V_0\left(1 - \frac{4}{3}e^{-t/160\text{ ns}} + \frac{1}{3}e^{-t/40\text{ ns}}\right).$$

In the special case of a three-stage operational amplifier with two equal corner frequencies,

$$\frac{\mathscr{L}\{V_{out}(t)\}}{\mathscr{L}\{V_{in}(t)\}} = \frac{A_{dc}}{(1+s\tau_1)(1+s\tau_2)^2}, \quad (5.28a)$$

where

$$\tau_1 = \frac{1}{2\pi f_1} \quad (5.28b)$$

and

$$\tau_2 = \frac{1}{2\pi f_2} = \frac{1}{2\pi f_3}, \quad (5.28c)$$

with f_1, f_2, and f_3 those of Equation 5.15.

When input voltage V_{in} is a step function with magnitude V_0,

$$\mathscr{L}\{V_{in}(t)\} = \frac{V_0}{s} \quad (5.29)$$

and

$$\mathscr{L}\{V_{out}(t)\} = \frac{1}{s}\frac{A_{dc}V_0}{(1+s\tau_1)(1+s\tau_2)^2}. \quad (5.30)$$

The inverse Laplace transform of Equation 5.30 can be written for times $t > 0$ as

$$V_{out}(t) = A_{dc}V_0\left[1 - \frac{e^{-t/\tau_1} + \dfrac{\tau_2}{\tau_1}\left[\dfrac{\tau_2}{\tau_1} - 2 + \left(\dfrac{\tau_2}{\tau_1}-1\right)\dfrac{t}{\tau_2}\right]e^{-t/\tau_2}}{\left(\dfrac{\tau_2}{\tau_1}-1\right)^2}\right], \quad (5.31a)$$

provided that

$$\tau_1 \neq \tau_2, \quad (5.31b)$$

$$\tau_1 \neq 0, \quad (5.31c)$$

and

$$\tau_2 \neq 0. \quad (5.31d)$$

EXAMPLE 5.9. In a three-stage operational amplifier, one corner frequency is at $f_1 = 1$ MHz and the two other corner frequencies coincide at $f_2 = 10$ MHz. Thus, by use of Equations 5.28b and 5.28c,

$$\tau_1 = \frac{1}{2\pi f_1} = \frac{1}{2\pi(1\text{ MHz})} \approx 160\text{ ns}$$

and

$$\tau_2 = \frac{1}{2\pi f_2} = \frac{1}{2\pi(10\text{ MHz})} \approx 16\text{ ns}.$$

Equation 5.31a can be applied, resulting in

$$V_{out}(t) = A_{dc}V_0\left(1 - \frac{e^{-t/160\text{ ns}} - 0.1(1.9 + 0.9t/16\text{ ns})e^{-t/16\text{ ns}}}{0.81}\right), \qquad t > 0.$$

In the special case of a three-stage operational amplifier with three equal corner frequencies,

$$\frac{\mathscr{L}\{V_{out}(t)\}}{\mathscr{L}\{V_{in}(t)\}} = \frac{A_{dc}}{(1 + s\tau_1)^3}, \tag{5.32a}$$

where

$$\tau_1 = \frac{1}{2\pi f_1} = \frac{1}{2\pi f_2} = \frac{1}{2\pi f_3}, \tag{5.32b}$$

with f_1, f_2, and f_3 those of Equation 5.15.

When input voltage V_{in} is a step function with magnitude V_0,

$$\mathscr{L}\{V_{in}(t)\} = \frac{V_0}{s} \tag{5.33}$$

and

$$\mathscr{L}\{V_{out}(t)\} = \frac{1}{s}\frac{A_{dc}V_0}{(1 + s\tau_1)^3}. \tag{5.34}$$

The inverse Laplace transform of Equation 5.34 can be written for times $t > 0$ as

$$V_{out}(t) = A_{dc}V_0\left\{1 - \left[1 + \frac{t}{\tau_1} + \frac{1}{2}\left(\frac{t}{\tau_1}\right)^2\right]e^{-t/\tau_1}\right\}. \tag{5.35}$$

Output voltage V_{out} of Equation 5.35 is shown in Figure 5.7 by the graph marked (*c*). Figure 5.7 also shows the transient response of a single-stage operational amplifier, $V_{out} = A_{dc}V_0(1 - e^{-t/\tau_1})$, by graph (*a*), as well as the transient response of a two-stage operational amplifier with two identical corner frequencies, given by Equation 5.23, by graph (*b*). Note that the time scale of Figure 5.7 is different from preceding figures.

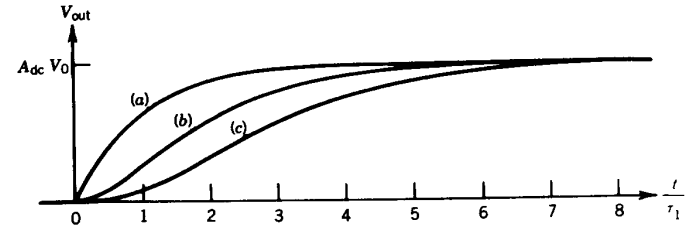

FIGURE 5.7 Output voltage V_{out} as a function of t/τ_1 for operational amplifiers with identical corner frequencies: (*a*) Single-stage amplifier, (*b*) two-stage amplifier, and (*c*) three-stage amplifier.

PROBLEMS

5.1 For the circuit of Figure 5.1, sketch output voltage V_{out} as a function of time, if input current I_{in} is a delta function (impulse function) $I_{in}(t) = (10^{-10}\text{ coulomb})\delta(t)$; $R = 1000\,\Omega$, and $C = 10$ pF.

5.2 Derive Equations 5.1 and 5.4.

5.3 Evaluate Equations 5.5 and 5.6 if, in the circuit of Figure 5.1, $R = 2000\,\Omega$, $C = 20$ pF, and current I_{in} is a sinewave with a frequency of 20 MHz.

5.4 Show that the phase plot of Figure 5.3 is antisymmetric (invariant under 180° rotation) around the $f/f_0 = 1$, $\varphi = -45°$ point.

5.5 Derive Equations 5.5 and 5.6.

5.6 Show that an approximation of phase φ of Equation 5.6 for small values of f/f_0, which is more accurate than that of Equation 5.10, is given by

$$\varphi \approx -\frac{f}{f_0} + \frac{1}{3}\left(\frac{f}{f_0}\right)^3.$$

5.7 Show that an approximation of phase φ of Equation 5.6 for large values of f/f_0, which is more accurate than that of Equation 5.11, is given by

$$\varphi \approx -\frac{\pi}{2} + \frac{f_0}{f} - \frac{1}{3}\left(\frac{f_0}{f}\right)^3.$$

Evaluate this expression, Equation 5.11, and Equation 5.6 for $f/f_0 = 10$. Present the results in degrees.

5.8 Show that the tangent drawn to the phase plot φ of Figure 5.3 at $f/f_0 = 1$, $\varphi = -45°$ reaches $f/f_0 = 10$ at a phase of

$$\varphi = -45° - \frac{180° \ln 10}{2\pi} \approx -45° - 66° = -111°.$$

5.9 Derive Equation 5.8 by expanding $\ln[1/\sqrt{1+(f/f_0)^2}]$ into a Taylor series.

5.10 Show that the approximation of Equation 5.8 evaluated at $f/f_0 = 1$ would result in a gain that is down by $10\,\text{dB}\,\log_{10} e \approx 4.3\,\text{dB}$ from its value at $f = 0$.

5.11 A stage of an operational amplifier can be represented by the circuit of Figure 5.1 with $R = 10{,}000\,\Omega$ and $C = 5\,\text{pF}$. At what frequency is the gain down by 3 dB from its value at zero frequency?

5.12 Derive Equation 5.12, and verify the results of Example 5.4. [*Hint:* Use Appendix A.]

5.13 An alternative configuration of the lag network is shown in Figure 5.8. Derive the expressions $\mathscr{L}\{V_{out}(t)\}/\mathscr{L}\{V_{in}(t)\}$ and $V_{out}(f)/V_{in}(f)$.

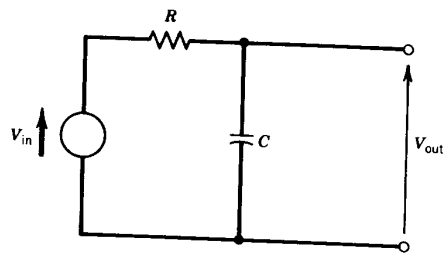

FIGURE 5.8

5.14 A two-stage operational amplifier has an amplification at zero frequency of $A_{dc} = 10{,}000$. It consists of two identical stages, each of which can be represented by a lag network with $R = 10{,}000\,\Omega$ and $C = 5\,\text{pF}$. Sketch the Bode plots, using piecewise linear approximation for the gain.

5.15 Find the output voltage as a function of time for the amplifier described in Problem 5.14 if the input voltage is a step function $V_{in}(t) = (1\,\text{mV})u(t)$.

5.16 Use Equation 5.8 and show that for $f/f_1 \ll 1$ and $f/f_2 \ll 1$ the magnitude of Equation 5.13 can be approximated as

$$|A| \approx A_{dc}\, e^{-\frac{1}{2}[(f/f_1)^2+(f/f_2)^2]}.$$

5.17 A three-stage operational amplifier has an amplification in the form of Equation 5.15 with $A_{dc} = 1000$. The three stages are characterized by $f_1 = 1\,\text{MHz}$, $f_2 = 10\,\text{MHz}$, and $f_3 = 50\,\text{MHz}$. Plot the Bode plots of amplification A, using piecewise linear approximation for the gain.

5.18 Derive Equation 5.19 using Appendix A.

5.19 Show that for the exact V_{out} of Example 5.7
(a) $V_{out} = 0$ at $t = 0$;
(b) $dV_{out}/dt = 0$ at $t = 0$;
(c) $V_{out} = 1000V_0$ when $t \to \infty$.

5.20 Plot for $0 \leqslant t \leqslant 50$ ns the exact and the approximate expressions given for V_{out} in Example 5.7.

5.21 Derive Equation 5.23 using Appendix A.

5.22 Show that for Equation 5.23
(a) $V_{out} = 0$ at $t = 0$;
(b) $dV_{out}/dt = 0$ at $t = 0$;
(c) $V_{out} = A_{dc}V_0$ when $t \to \infty$.

5.23 Derive Equation 5.27 using Appendix A.

5.24 Show that for the exact V_{out} of Example 5.8
(a) $V_{out} = 0$ at $t = 0$;
(b) $dV_{out}/dt = 0$ at $t = 0$;
(c) $V_{out} = 10{,}000V_0$ when $t \to \infty$.

5.25 Show that for the approximate V_{out} of Example 5.8
(a) $V_{out} = 0$ at $t = 0$;
(b) $V_{out} = 10{,}000V_0$ when $t \to \infty$.

5.26 Plot for $0 \leqslant t \leqslant 50$ ns the exact and approximate expressions given for V_{out} in Example 5.8.

5.27 Derive Equation 5.31 using Appendix A.

5.28 Show that for V_{out} of Example 5.9
(a) $V_{out} = 0$ at $t = 0$;
(b) $dV_{out}/dt = 0$ at $t = 0$;
(c) $V_{out} = A_{dc}V_0$ when $t \to \infty$.

5.29 Derive Equation 5.35 using Appendix A.

5.30 Show that for Equation 5.35
(a) $V_{out} = 0$ at $t = 0$;
(b) $dV_{out}/dt = 0$ at $t = 0$;
(c) $V_{out} = A_{dc}V_0$ when $t \to \infty$.

CHAPTER 6

Frequency Response and Transient Response of Operational Amplifiers, Part II

This chapter introduces additional networks for representing operational amplifier amplification A and feedback return F. The chapter also includes networks that will be used to represent responses of feedback amplifiers in Chapter 8.

6.1 Modified Lag Networks

Modified lag networks are used for modifying the properties of operational amplifiers. They may be part of the operational amplifier or may be added externally. Two forms of a modified lag network are shown in Figure 6.1, which are equivalent if $V_{in} = I_{in}R_1$. In what follows, the circuit of Figure 6.1*b* will be discussed, even though the circuit of Figure 6.1*a* is used more often.

6.1.1 Frequency Response of Modified Lag Networks

When V_{in} and V_{out} are represented in the frequency domain, the transfer function is

$$\frac{V_{out}(f)}{V_{in}(f)} = \frac{1 + jf/f_2}{1 + jf/f_1}, \tag{6.1a}$$

where corner frequency f_1 (pole frequency) is defined by

$$f_1 \equiv \frac{1}{2\pi(R_1 + R_2)C} \tag{6.1b}$$

and corner frequency f_2 (*zero frequency*) by

$$f_2 \equiv \frac{1}{2\pi R_2 C}. \tag{6.1c}$$

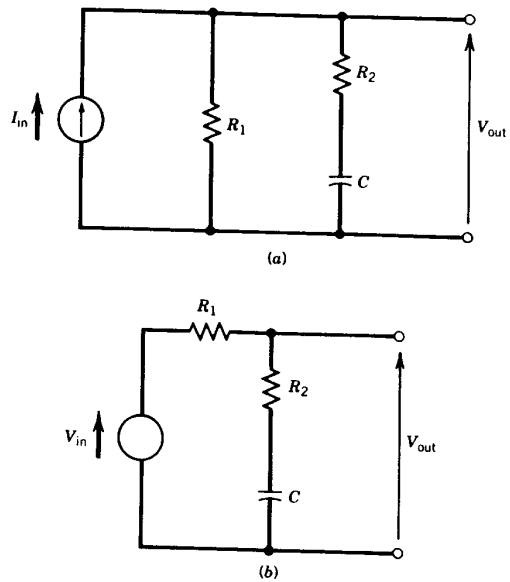

FIGURE 6.1 Two equivalent forms of a modified lag network.

Bode plots of a modified lag network with $f_2 = 100f_1$ are shown in Figure 6.2.

It can be seen from Equations 6.1b and 6.1c that $f_2 \geqslant f_1$; thus, the magnitude of Equation 6.1a,

$$\left|\frac{V_{out}(f)}{V_{in}(f)}\right| = \frac{|1 + jf/f_2|}{|1 + jf/f_1|}, \tag{6.2}$$

is monotonically decreasing as a function of frequency f. The phase can be written

$$\underline{\left/\frac{V_{out}(f)}{V_{in}(f)}\right.} = \underline{\left/\frac{1 + jf/f_2}{1 + jf/f_1}\right.} = \underline{/1 + jf/f_2} - \underline{/1 + jf/f_1}$$

$$= \arctan\left(\frac{f}{f_2}\right) - \arctan\left(\frac{f}{f_1}\right). \tag{6.3}$$

The ratio of f_2 and f_1 can be expressed from Equations 6.1b and 6.1c as

$$\frac{f_2}{f_1} = \frac{R_1 + R_2}{R_2} = 1 + \frac{R_1}{R_2}. \tag{6.4}$$

Thus, if f_2/f_1 is given, it determines R_1/R_2; however, C and either R_1 or R_2 can still be chosen.

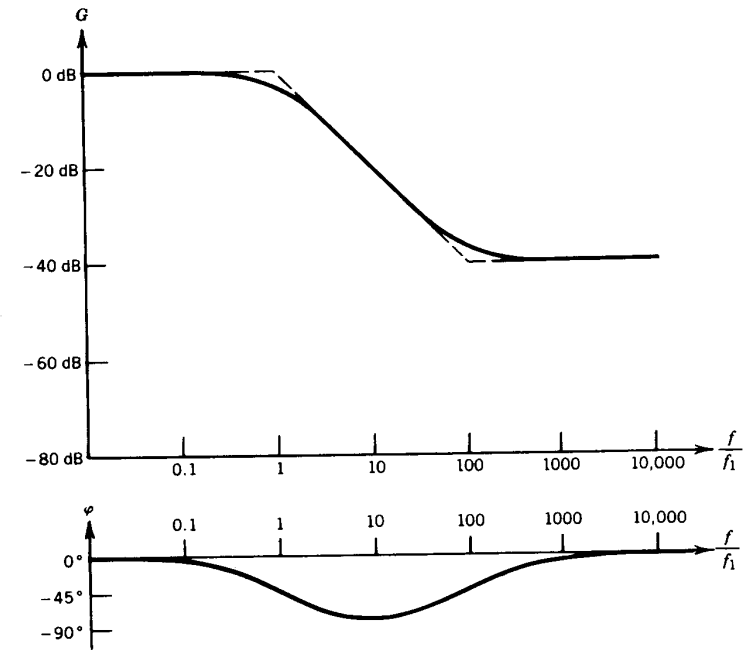

FIGURE 6.2 Bode plots $G \equiv 20\,\text{dB}\ \log_{10}|(1 + jf/f_2)/(1 + jf/f_1)|$ and $\varphi \equiv \underline{/(1 + jf/f_2)/(1 + jf/f_1)}$ for a modified lag network with $f_2 = 100f_1$.

EXAMPLE 6.1. In the modified lag network of Figure 6.1, $(R_1 + R_2)/R_2 = 10$; thus $f_2/f_1 = 10$. The magnitude of the transfer function, from Equation 6.2, is

$$\left|\frac{V_{out}(f)}{V_{in}(f)}\right| = \frac{|1 + jf/f_2|}{|1 + jf/f_1|} = \frac{|1 + jf/(10f_1)|}{|1 + jf/f_1|}$$

and phase φ of the transfer function becomes

$$\varphi = \underline{\left/\frac{1 + jf/f_2}{1 + jf/f_1}\right.} = \arctan\left(\frac{f}{f_2}\right) - \arctan\left(\frac{f}{f_1}\right)$$

$$= \arctan\left(\frac{f}{10f_1}\right) - \arctan\left(\frac{f}{f_1}\right).$$

If, alternatively, f_1 and f_2 are given, R_1 and R_2 can be computed from

$$R_1 = \frac{1}{2\pi C}\left(\frac{1}{f_1} - \frac{1}{f_2}\right) \tag{6.5a}$$

and

$$R_2 = \frac{1}{2\pi C}\frac{1}{f_2}. \tag{6.5b}$$

6.1.2 Transient Response of Modified Lag Networks

When V_{in} and V_{out} are represented in the time domain, it can be shown that for the circuit of Figure 6.1*b*,

$$\frac{\mathscr{L}\{V_{out}(t)\}}{\mathscr{L}\{V_{in}(t)\}} = \frac{1 + sR_2C}{1 + s(R_1 + R_2)C}. \tag{6.6}$$

When input voltage V_{in} is a step function with magnitude V_0,

$$\mathscr{L}\{V_{in}(t)\} = \frac{V_0}{s} \tag{6.7}$$

and

$$\mathscr{L}\{V_{out}(t)\} = \frac{1}{s}\frac{1 + sR_2C}{1 + s(R_1 + R_2)C}V_0. \tag{6.8}$$

The inverse Laplace transform of Equation 6.8 can be written for times $t > 0$ as

$$V_{out}(t) = V_0\left[1 - \frac{R_1}{R_1 + R_2}e^{-t/[(R_1 + R_2)C]}\right]. \tag{6.9}$$

EXAMPLE 6.2. In the modified lag network of Example 6.1, $(R_1 + R_2)/R_2 = 10$. Thus, $R_1/(R_1 + R_2) = 0.9$ and Equation 6.9 becomes

$$V_{out}(t) = V_0[1 - 0.9e^{-t/[(R_1 + R_2)C]}], \qquad t > 0.$$

Figure 6.3 shows V_{out} as a function of $t/(R_1 + R_2)C$. Note the jump of $0.1V_0$ at time $t = 0$. This is because for short times capacitor C acts as a short-circuit, and as a result output voltage V_{out} becomes $V_0R_2/(R_1 + R_2) = 0.1V_0$ immediately after $t = 0$.

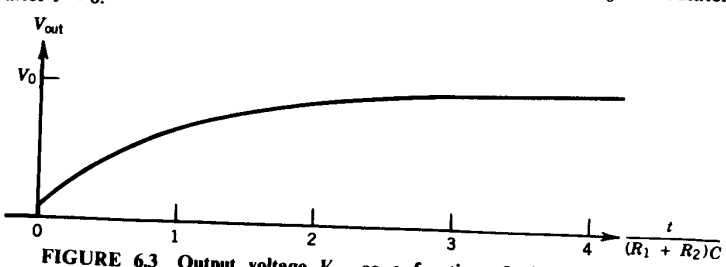

FIGURE 6.3 Output voltage V_{out} as a function of $t/[(R_1 + R_2)C]$ in Example 6.2.

6.2 Lead Networks

A *lead network* is shown in Figure 6.4. As is the case for modified lag networks, lead networks modify the properties of operational amplifiers. They are usually located external to the operational amplifier.

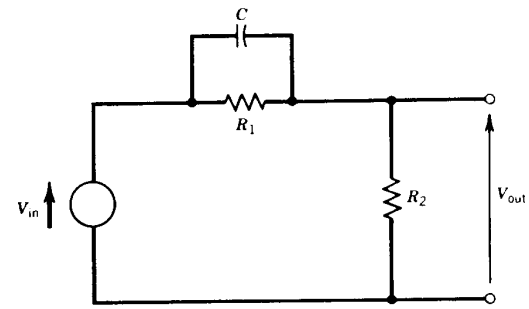

FIGURE 6.4 A lead network.

6.2.1 Frequency Response of Lead Networks

In the frequency domain representation, the transfer function can be written

$$\frac{V_{out}(f)}{V_{in}(f)} = \frac{f_1}{f_2}\frac{1 + jf/f_1}{1 + jf/f_2}, \tag{6.10a}$$

where corner frequency f_1 (zero frequency) is defined by

$$f_1 \equiv \frac{1}{2\pi R_1 C} \tag{6.10b}$$

and corner frequency f_2 (pole frequency) by

$$f_2 \equiv \frac{1}{2\pi C\dfrac{R_1R_2}{R_1 + R_2}}. \tag{6.10c}$$

It is seen from Equations 6.10b and 6.10c that $f_2 \geqslant f_1$; thus, the magnitude of Equation 6.10a,

$$\left|\frac{V_{out}(f)}{V_{in}(f)}\right| = \frac{f_1}{f_2}\frac{|1 + jf/f_1|}{|1 + jf/f_2|} \tag{6.11}$$

is monotonically increasing as a function of frequency f. Phase φ of Equation 6.10a can be written

$$\varphi = \angle\frac{1 + jf/f_1}{1 + jf/f_2} = \arctan\left(\frac{f}{f_1}\right) - \arctan\left(\frac{f}{f_2}\right). \tag{6.12}$$

Bode plots of a lead network with $f_2 = 100f_1$ are shown in Figure 6.5.

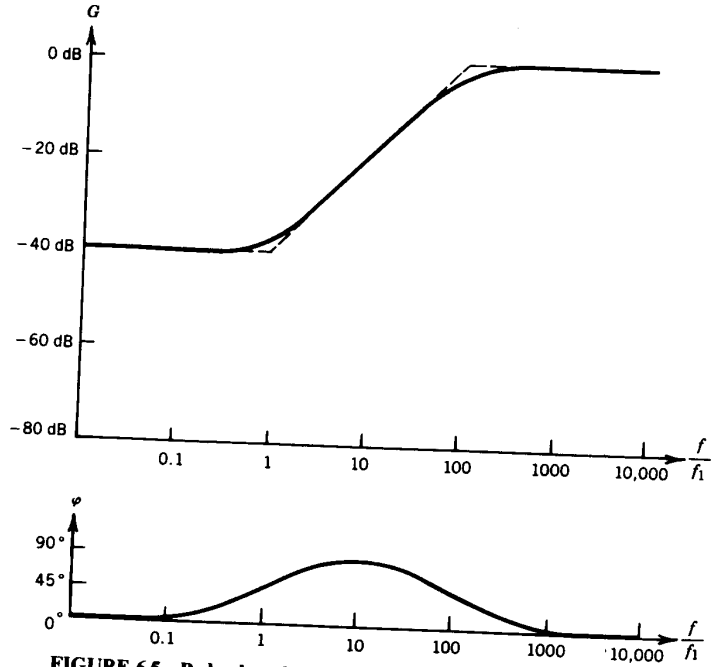

FIGURE 6.5 Bode plots $G \equiv 20\,\text{dB}\,\log_{10}|(f_1/f_2)(1 + jf/f_1)/(1 + jf/f_2)|$ and $\varphi \equiv \angle(f_1/f_2)(1 + jf/f_1)/(1 + jf/f_2)$ for a lead network with $f_2 = 100f_1$.

It can be seen from Equations 6.10b and 6.10c that

$$\frac{f_2}{f_1} = \frac{R_1 + R_2}{R_2} = 1 + \frac{R_1}{R_2}. \tag{6.13}$$

Thus, if f_2/f_1 is given, it determines R_1/R_2; however, C and either R_1 or R_2 can still be chosen. If f_1 and f_2 are given, R_1 and R_2 can be computed from

$$R_1 = \frac{1}{2\pi C}\frac{1}{f_1} \tag{6.14a}$$

and

$$R_2 = \frac{1}{2\pi C}\frac{1}{f_2 - f_1}. \tag{6.14b}$$

EXAMPLE 6.3. In the lead network of Figure 6.4, $(R_1 + R_2)/R_2 = 10$; thus, $f_2/f_1 = 10$. The magnitude of the transfer function, from Equation 6.11, is

$$\left|\frac{V_{out}(f)}{V_{in}(f)}\right| = \frac{f_1}{f_2}\frac{|1 + jf/f_1|}{|1 + jf/f_2|} = \frac{1}{10}\frac{|1 + jf/f_1|}{|1 + jf/(10f_1)|},$$

and phase φ of the transfer function is

$$\varphi = \angle\frac{1 + jf/f_1}{1 + jf/f_2} = \arctan\left(\frac{f}{f_1}\right) - \arctan\left(\frac{f}{10f_1}\right).$$

6.2.2 Transient Response of Lead Networks

When V_{in} and V_{out} are represented in the time domain, it can be shown that

$$\frac{\mathscr{L}\{V_{out}(t)\}}{\mathscr{L}\{V_{in}(t)\}} = \frac{R_2}{R_1 + R_2}\frac{1 + sCR_1}{1 + sC\dfrac{R_1R_2}{R_1 + R_2}}. \tag{6.15}$$

When input voltage V_{in} is a step function with magnitude V_0,

$$\mathscr{L}\{V_{in}(t)\} = \frac{V_0}{s} \tag{6.16}$$

and

$$\mathscr{L}\{V_{out}(t)\} = \frac{1}{s}\frac{R_2}{R_1 + R_2}\frac{1 + sCR_1}{1 + sC\dfrac{R_1R_2}{R_1 + R_2}}V_0. \tag{6.17}$$

The inverse Laplace transform of Equation 6.17 can be written for times $t > 0$ as

$$V_{out}(t) = \frac{R_2}{R_1 + R_2}V_0\left[1 + \frac{R_1}{R_2}e^{-t\Big/\left(\frac{R_1R_2}{R_1 + R_2}C\right)}\right]. \tag{6.18}$$

EXAMPLE 6.4. In the lead network of Example 6.3, $(R_1 + R_2)/R_2 = 10$. Thus, $R_2/(R_1 + R_2) = 0.1$, $R_1/R_2 = 9$, and Equation 6.18 becomes

$$V_{out}(t) = V_0\left[0.1 + 0.9\,e^{-t\Big/\left(\frac{R_1R_2}{R_1 + R_2}C\right)}\right], \qquad t > 0.$$

Output voltage V_{out} is shown in Figure 6.6. Note the initial jump of V_0 at time $t = 0$. This is because for short times capacitor C acts as a short-circuit, and as a result output voltage V_{out} becomes equal to V_0 immediately after $t = 0$. Also note that output voltage V_{out} becomes $0.1\ V_0$ for long times.

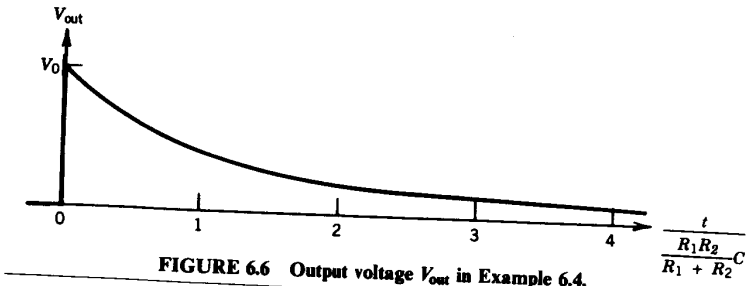

FIGURE 6.6 Output voltage V_{out} in Example 6.4.

6.3 Voltage Divider Networks

Figure 6.7 shows a voltage divider network, which is often used for feedback in operational amplifier circuits. This circuit is quite general and, as will be seen, it can have the characteristics of a resistive voltage divider, a lag network, a modified lag network, or a lead network.

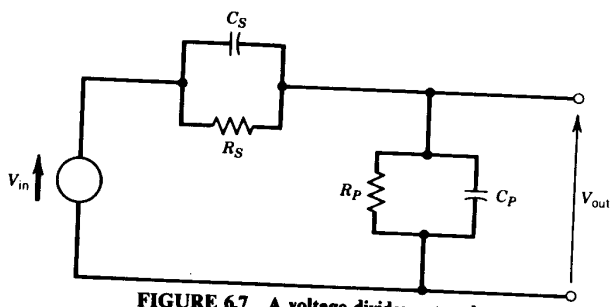

FIGURE 6.7 A voltage divider network.

6.3.1 Frequency Response of Voltage Divider Networks

When V_{in} and V_{out} are represented in the frequency domain, it can be shown that the transfer function is

$$\frac{V_{out}(f)}{V_{in}(f)} = \frac{R_P}{R_S + R_P}\frac{1 + jf/f_1}{1 + jf/f_2}, \tag{6.19a}$$

where corner frequency f_1 (zero frequency) is defined by

$$f_1 \equiv \frac{1}{2\pi R_S C_S} \tag{6.19b}$$

and corner frequency f_2 (pole frequency) by

$$f_2 \equiv \frac{1}{2\pi \frac{R_S R_P}{R_S + R_P}(C_S + C_P)}. \tag{6.19c}$$

Note that the ratio of the corner frequencies in Equations 6.19b and 6.19c is

$$\frac{f_2}{f_1} = \frac{R_S + R_P}{R_P}\frac{C_S}{C_S + C_P}; \tag{6.20}$$

thus,

$$\frac{f_2}{f_1} \leqslant \frac{R_S + R_P}{R_P}. \tag{6.21}$$

EXAMPLE 6.5. In the voltage divider network of Figure 6.7, $R_S = 10{,}000\,\Omega$, $R_P = 100\,\Omega$, $C_S = 0.5$ pF, and $C_P = 5$ pF. Thus,

$$f_1 \equiv \frac{1}{2\pi R_S C_S} = \frac{1}{2\pi(10{,}000)(0.5 \times 10^{-12})} = 31.8 \text{ MHz},$$

$$f_2 \equiv \frac{1}{2\pi \frac{R_S R_P}{R_S + R_P}(C_S + C_P)} = 292 \text{ MHz},$$

and the transfer function becomes

$$\frac{V_{out}(f)}{V_{in}(f)} = \frac{R_P}{R_S + R_P}\frac{1 + jf/f_1}{1 + jf/f_2} = 0.0099\,\frac{1 + jf/31.8\text{ MHz}}{1 + jf/292\text{ MHz}}.$$

Limiting cases of the voltage divider network are shown in Figure 6.8. Figure 6.8*a* is a resistive divider with a frequency-independent $V_{out}/V_{in} = R_P/(R_P + R_S)$. Figure 6.8*b* has a transfer function of

$$\frac{V_{out}(f)}{V_{in}(f)} = \frac{R_P}{R_P + R_S}\frac{1}{1 + jf/f_0}, \tag{6.22a}$$

where corner frequency f_0 is

$$f_0 \equiv \frac{R_P + R_S}{2\pi R_P R_S C_P}; \tag{6.22b}$$

that is, this circuit has the frequency characteristics of a lag network. The circuit of Figure 6.8*c* is a lead network (see Equations 6.10a–c). The last circuit (Figure 6.8*d*) is a *compensated voltage divider network* where

$$R_S C_S = R_P C_P. \tag{6.23}$$

It can be shown that when Equation 6.23 is satisfied, the transfer function of Equation 6.19a reduces to

$$\frac{V_{out}(f)}{V_{in}(f)} = \frac{R_P}{R_S + R_P}, \tag{6.24}$$

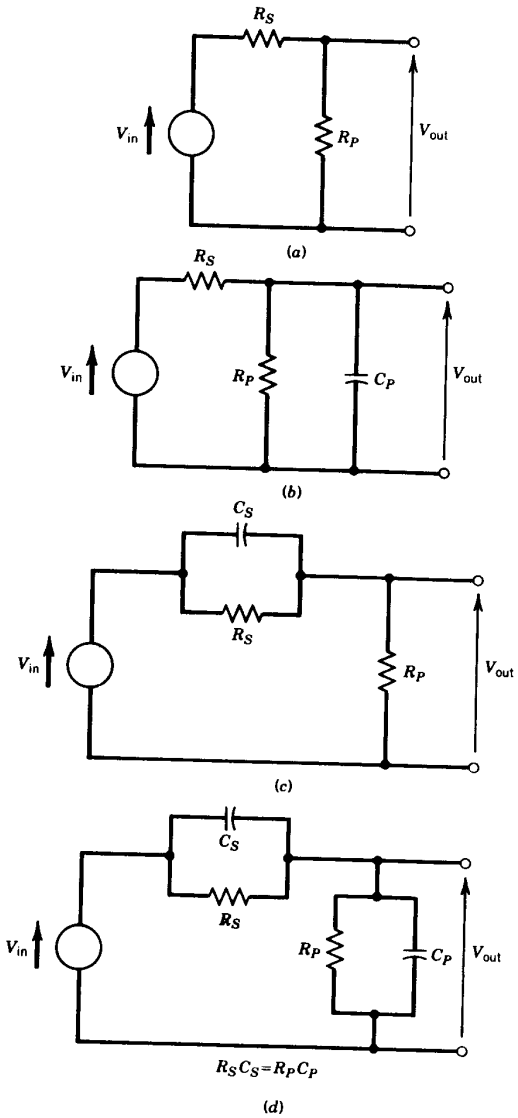

FIGURE 6.8 Limiting cases of the voltage divider network: (*a*) resistive divider, (*b*) lag network, (*c*) lead network, and (*d*) compensated voltage divider network.

independent of frequency and identical to the transfer function of the resistive divider of Figure 6.8*a*. Thus, if the frequency-independent transfer function of the divider of Figure 6.8*a* is desired but unavoidable capacitances are present, one of the capacitances should be increased such that Equation 6.23 is satisfied.

EXAMPLE 6.6. In the preceding example, $R_S = 10{,}000\,\Omega$, $R_P = 100\,\Omega$, $C_S = 0.5$ pF, and $C_P = 5$ pF were given for the component values in the circuit of Figure 6.7 and a frequency-dependent transfer function $V_{out}(f)/V_{in}(f)$ resulted. If a frequency-independent transfer function is desired, then from Equation 6.23

$$\frac{C_P}{C_S} = \frac{R_S}{R_P} = \frac{10{,}000\,\Omega}{100\,\Omega} = 100$$

should hold. In the original circuit, however,

$$\frac{C_P}{C_S} = \frac{5\text{ pF}}{0.5\text{ pF}} = 10.$$

A $C_P/C_S = 100$ can be attained by connecting an additional 45-pF capacitance in parallel with the original C_P, resulting in

$$\frac{C_P}{C_S} = \frac{5\text{ pF} + 45\text{ pF}}{0.5\text{ pF}} = 100$$

and in a frequency-independent transfer function.

6.3.2 Transient Response of Voltage Divider Networks

When input voltage V_{in} and output voltage V_{out} in the circuit of Figure 6.7 are represented in the time domain,

$$\frac{\mathscr{L}\{V_{out}(t)\}}{\mathscr{L}\{V_{in}(t)\}} = \frac{R_P}{R_S + R_P}\,\frac{1 + s\tau_1}{1 + s\tau_2}, \tag{6.25a}$$

where

$$\tau_1 = R_S C_S \tag{6.25b}$$

and

$$\tau_2 = \frac{R_S R_P}{R_S + R_P}(C_S + C_P). \tag{6.25c}$$

When input voltage V_{in} is a step function with magnitude V_0,

$$\mathscr{L}\{V_{in}(t)\} = \frac{V_0}{s} \tag{6.26}$$

and

$$\mathscr{L}\{V_{out}(t)\} = \frac{R_P}{R_S + R_P}\,\frac{1}{s}\,\frac{1 + s\tau_1}{1 + s\tau_2}\,V_0. \tag{6.27}$$

The inverse Laplace transform of Equation 6.27 can be written for times $t > 0$ as

$$V_{out}(t) = \frac{R_P}{R_S + R_P} V_0 \left[1 + \left(\frac{\tau_1}{\tau_2} - 1 \right) e^{-t/\tau_2} \right], \tag{6.28a}$$

provided that

$$\tau_2 \neq 0. \tag{6.28b}$$

Depending on the values of τ_1 and τ_2, Equation 6.28a may represent six different characteristics:

1. When $\tau_1 = 0$ and $\tau_2 = 0$, Equation 6.28a is not applicable; however, the circuit is a resistive voltage divider and V_{out}/V_{in} is a constant for all times.
2. When $\tau_1 = \tau_2$, $\tau_1/\tau_2 - 1 = 0$, the circuit is a compensated voltage divider, and V_{out}/V_{in} is a constant for all times.
3. When $\tau_1 = 0$ and $\tau_2 \neq 0$, $\tau_1/\tau_2 - 1 = -1$, the circuit has the characteristics of a lag network, and $V_{out} = \text{constant} \cdot (1 - e^{-t/\tau_2})$ for $t > 0$.
4. When $\tau_1 < \tau_2$, $\tau_1/\tau_2 - 1 < 0$, the circuit has the characteristics of a modified lag network, and the transient has the form of Equation 6.9 and Figure 6.3.
5. When $\tau_1 > \tau_2$, $\tau_1/\tau_2 - 1 > 0$, the circuit has the characteristics of a lead network, and the transient has the form of Equation 6.18 and Figure 6.6.
6. When $\tau_1 \neq 0$ and $\tau_2 = 0$, Equation 6.28a is not applicable. Also, according to Equations 6.25b and 6.25c, R_P becomes 0 in Figure 6.7; thus, $V_{out} = 0$ at all times and the circuit is useless.

6.4 Compound Lag Networks

Two forms of a modified lag network were shown in Figure 6.1. However, in reality there is always stray capacitance in parallel with the output terminals. Two forms of the resulting network are shown in Figure 6.9, which are equivalent if $V_{in} = I_{in}R_1$. In what follows, the circuit of Figure 6.9*b* is discussed first, even though the circuit of Figure 6.9*a* is used more often.

As was also the case for modified lag networks, compound lag networks are used for modifying the properties of operational amplifiers. They may be part of the operational amplifier or may be added externally. The discussion of compound lag networks starts here with the Laplace transform domain; this is followed by descriptions of their frequency response and transient response.

6.4.1 Laplace Transforms for Compound Lag Networks

The transfer function of the compound lag network of Figure 6.9*b* can be written in the Laplace transform domain as

$$\frac{\mathscr{L}\{V_{out}(t)\}}{\mathscr{L}\{V_{in}(t)\}} = \frac{1 + sR_2C_2}{1 + s(R_1C_1 + R_1C_2 + R_2C_2) + s^2R_1C_1R_2C_2}. \tag{6.29}$$

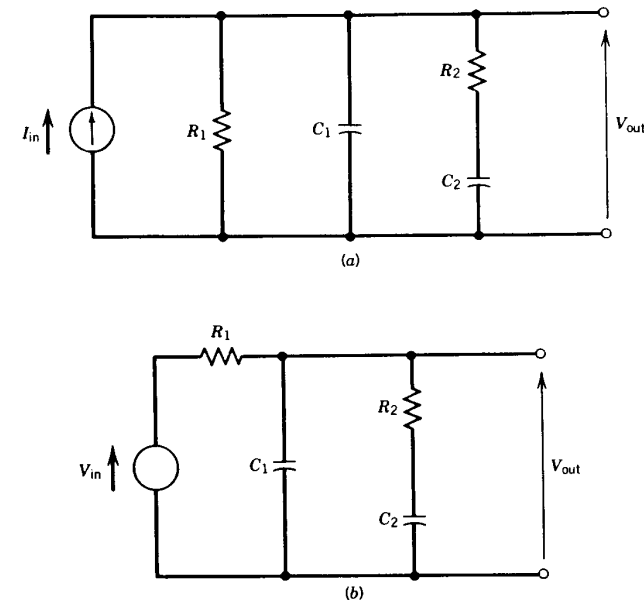

FIGURE 6.9 Two equivalent forms of a compound lag network.

Equation 6.29 can also be written

$$\frac{\mathscr{L}\{V_{out}(t)\}}{\mathscr{L}\{V_{in}(t)\}} = \frac{1 + s\tau_2}{(1 + s\tau_L)(1 + s\tau_U)}, \tag{6.30a}$$

where

$$\tau_2 = R_2C_2, \tag{6.30b}$$

$$\frac{1}{\tau_L} = \frac{R_1C_1 + R_1C_2 + R_2C_2}{2R_1C_1R_2C_2} \left(1 - \sqrt{1 - \frac{4R_1C_1R_2C_2}{(R_1C_1 + R_1C_2 + R_2C_2)^2}} \right), \tag{6.30c}$$

$$\frac{1}{\tau_U} = \frac{R_1C_1 + R_1C_2 + R_2C_2}{2R_1C_1R_2C_2} \left(1 + \sqrt{1 - \frac{4R_1C_1R_2C_2}{(R_1C_1 + R_1C_2 + R_2C_2)^2}} \right). \tag{6.30d}$$

Equations 6.30c and 6.30d can be simplified when $R_2 \ll R_1$, which is often the case for operational amplifiers. In such cases, as shown in Appendix B, Section B.1, time constants τ_L and τ_U can be approximated, and Equations 6.30a–d can be written

$$\frac{\mathscr{L}\{V_{out}(t)\}}{\mathscr{L}\{V_{in}(t)\}} = \frac{1 + s\tau_2}{(1 + s\tau_L)(1 + s\tau_U)}, \tag{6.31a}$$

$$\tau_2 = R_2C_2, \tag{6.31b}$$

$$\tau_L = R_1(C_1 + C_2), \tag{6.31c}$$

$$\tau_U = R_2\frac{C_1C_2}{C_1 + C_2}, \tag{6.31d}$$

provided that

$$\frac{R_2}{R_1} \ll 1. \tag{6.31e}$$

Reasons for the designations τ_L and τ_U will be seen in Section 6.4.2. Also, it can be shown (see Appendix B, Section B.2) that in the exact Equations 6.30a–d time constants τ_L, τ_2, and τ_U have the relative magnitudes

$$\frac{1}{\tau_L} < \frac{1}{\tau_2} < \frac{1}{\tau_U}, \tag{6.32a}$$

which can also be written (see Problem 6.20)

$$\tau_L > \tau_2 > \tau_U. \tag{6.32b}$$

6.4.2 Frequency Response of Compound Lag Networks

When V_{in} and V_{out} are represented in the frequency domain then, by use of Equations 6.30a–d with the substitution $s = j2\pi f$, the transfer function becomes

$$\frac{V_{out}(f)}{V_{in}(f)} = \frac{1 + jf/f_2}{(1 + jf/f_L)(1 + jf/f_U)}, \tag{6.33a}$$

where

$$f_2 = \frac{1}{2\pi R_2C_2}, \tag{6.33b}$$

$$f_L = \frac{1}{2\pi}\frac{R_1C_1 + R_1C_2 + R_2C_2}{2R_1C_1R_2C_2}\left(1 - \sqrt{1 - \frac{4R_1C_1R_2C_2}{(R_1C_1 + R_1C_2 + R_2C_2)^2}}\right), \tag{6.33c}$$

$$f_U = \frac{1}{2\pi}\frac{R_1C_1 + R_1C_2 + R_2C_2}{2R_1C_1R_2C_2}\left(1 + \sqrt{1 - \frac{4R_1C_1R_2C_2}{(R_1C_1 + R_1C_2 + R_2C_2)^2}}\right). \tag{6.33d}$$

Note that $f_L < f_2 < f_U$, hence the use of the subscripts L and U (lower and upper).

When $R_2 \ll R_1$, then, based on Equations 6.31c and 6.31d, Equations 6.33c and 6.33d can be approximated as

$$f_L = \frac{1}{2\pi R_1(C_1 + C_2)} \tag{6.34a}$$

and

$$f_U = \frac{C_1 + C_2}{2\pi R_2C_1C_2}. \tag{6.34b}$$

The resulting Bode plots are shown in Figure 6.10 by the graphs marked (*a*). Four regions can be distinguished. At the lowest frequencies, that is, for $f \ll f_L$, the magnitude is a constant 1 and the phase is 0°. The straight-line magnitude segment between f_L and f_2 drops at a rate of −20 dB/decade of frequency, and

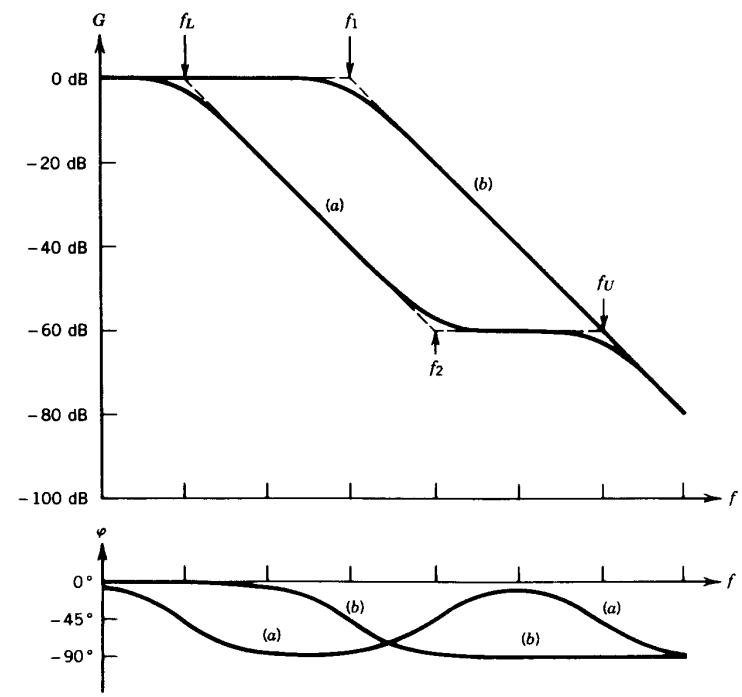

FIGURE 6.10 Bode plots $G \equiv 20\,\text{dB}\ \log_{10}|V_{out}(f)/V_{in}(f)|$ and $\varphi \equiv \angle V_{out}(f)/V_{in}(f)$ for a compound lag network described by Equations 6.33a, 6.33b, 6.34a, and 6.34b: (*a*) $C_2 \neq 0$ and (*b*) $C_2 = 0$.

the straight-line magnitude segment between f_2 and f_U has a constant magnitude of f_L/f_2. At the highest frequencies, that is, for $f \gg f_U$, the magnitude is $1/2\pi R_1 C_1 f$, dropping at a rate of -20 dB/decade of frequency, and the phase is $-90°$.

Figure 6.10 also shows, by the graphs marked (*b*), the transfer function for the case when $C_2 = 0$—hence when R_2 is ineffective. In this case, the circuit becomes a lag network with a corner frequency $f_1 = 1/2\pi R_1 C_1$. Note that the inclusion of R_2 and C_2 lowers the magnitude of the frequency response.

The use of compound lag networks is illustrated in Example 6.7.

EXAMPLE 6.7. A Type 2539 wideband operational amplifier includes a compound lag network with $R_1 = 2\,\text{M}\Omega$, $R_2 = 1.47\,\text{k}\Omega$, $C_1 = 0.4\,\text{pF}$, and $C_2 = 3.6\,\text{pF}$. Thus, by use of Equation 6.33b,

$$f_2 = \frac{1}{2\pi R_2 C_2} = \frac{1}{2\pi(1.47\,\text{k}\Omega)(3.6\,\text{pF})} \cong 30\,\text{MHz}.$$

The ratio $R_2/R_1 = 1.47\,\text{k}\Omega/2\,\text{M}\Omega \cong 0.74 \times 10^{-3} = 0.074\,\% \ll 1$. Hence, f_L and f_U can be approximated by Equations 6.34a and 6.34b, resulting in

$$f_L = \frac{1}{2\pi R_1(C_1 + C_2)} = \frac{1}{2\pi(2\,\text{M}\Omega)(0.4\,\text{pF} + 3.6\,\text{pF})} \cong 20\,\text{kHz}$$

and

$$f_U = \frac{C_1 + C_2}{2\pi R_2 C_1 C_2} = \frac{0.4\,\text{pF} + 3.6\,\text{pF}}{2\pi(1.47\,\text{k}\Omega)(0.4\,\text{pF})(3.6\,\text{pF})} \cong 300\,\text{MHz}.$$

The amplification of the remainder of the operational amplifier can be approximated as $A_{dc}/(1 + jf/f_A)$, where $A_{dc} = 30{,}000$ and $f_A = 30\,\text{MHz}$.* Thus, by use of Equation 6.33a, the overall amplification becomes

$$A = \frac{1 + jf/f_2}{(1 + jf/f_L)(1 + jf/f_U)} \frac{30{,}000}{1 + jf/f_A}$$

$$= \frac{1 + jf/30\,\text{MHz}}{(1 + jf/20\,\text{kHz})(1 + jf/300\,\text{MHz})} \frac{30{,}000}{1 + jf/30\,\text{MHz}}$$

$$= \frac{30{,}000}{(1 + jf/20\,\text{kHz})(1 + jf/300\,\text{MHz})}.$$

This is shown by the graphs marked (*a*) in Figure 6.11. The straight-line magnitude segment between $f_L = 20\,\text{kHz}$ and $f_U = 300\,\text{MHz}$ drops at a rate of -20 dB/decade of frequency, and for $f \gg 300\,\text{MHz}$ the magnitude drops at a rate of -40 dB/decade of frequency.

*This is only a rough approximation; an additional corner frequency of 300 MHz will be introduced in Chapter 7.

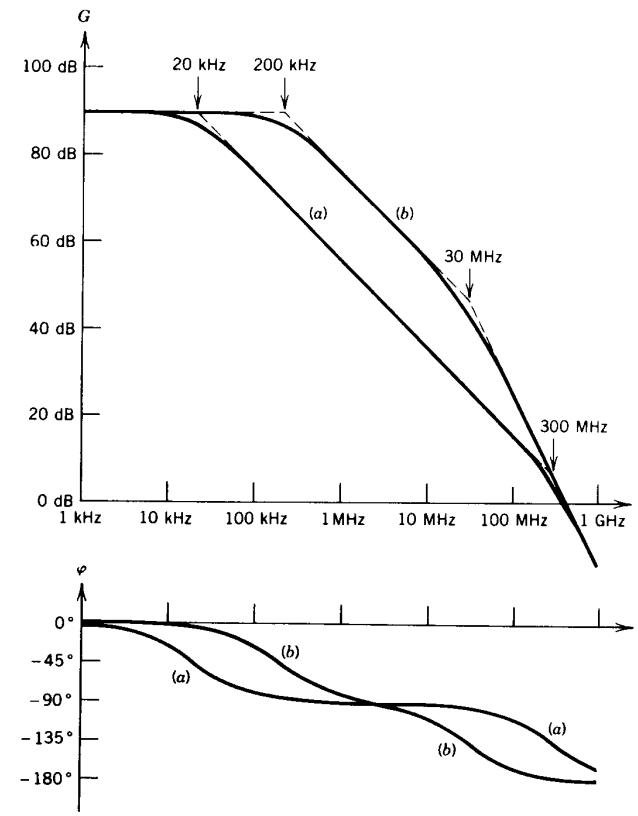

FIGURE 6.11 Bode plots $G \equiv 20\,\text{dB}\,\log_{10}|A|$ and $\varphi \equiv \underline{/A}$ for the overall amplifications in Example 6.7: (*a*) $C_2 = 3.6\,\text{pF}$ and (*b*) $C_2 = 0$.

In the case when $C_2 = 0$, R_2 is ineffective, and the overall amplification becomes

$$\frac{1}{1 + jf/f_1} \frac{30{,}000}{1 + jf/f_A},$$

where

$$f_1 = \frac{1}{2\pi R_1 C_1} = \frac{1}{2\pi(2\,\text{M}\Omega)(0.4\,\text{pF})} \cong 200\,\text{kHz}$$

and

$$f_A = 30\,\text{MHz}.$$

Hence, when $C_2 = 0$, the overall amplification is

$$A = \frac{30{,}000}{(1 + jf/200\,\text{kHz})(1 + jf/30\,\text{MHz})},$$

shown by the graphs marked (*b*) in Figure 6.11. The magnitude of this amplification drops at a rate of -40 dB/decade of frequency above a frequency of 30 MHz—as compared to a frequency of 300 MHz in the case of $C_2 = 3.6$ pF. It will be seen in Chapters 7 and 8 that the $C_2 = 3.6$ pF case of graph (*a*) in Figure 6.11 is preferable, even though the amplification in the $C_2 = 0$ case of graph (*b*) in Figure 6.11 has a greater magnitude between 20 kHz and 300 MHz (this is because the phase with $C_2 = 3.6$ pF is preferable at frequencies above 3 MHz).

6.4.3 Transient Response of Compound Lag Networks

When input voltage V_{in} is a step function with magnitude V_0,

$$\mathscr{L}\{V_{in}(t)\} = \frac{V_0}{s} \tag{6.35}$$

and, by use of Equation 6.30a,

$$\mathscr{L}\{V_{out}(t)\} = \frac{V_0}{s}\frac{1 + s\tau_2}{(1 + s\tau_L)(1 + s\tau_U)}. \tag{6.36}$$

The inverse Laplace transform of Equation 6.36 can be written for times $t > 0$, as

$$V_{out}(t) = V_0\left(1 - \frac{\tau_2 - \tau_U}{\tau_L - \tau_U}e^{-t/\tau_U} - \frac{\tau_L - \tau_2}{\tau_L - \tau_U}e^{-t/\tau_L}\right). \tag{6.37}$$

6.5 Series *RLC* Circuits

Inductances are only rarely significant in operational amplifier circuits. The principal reason for discussing the series *RLC* circuit, shown in Figure 6.12, is the use of the results in representing feedback amplifiers in Chapter 8. The discussion starts here in the Laplace transform domain; this is followed by descriptions of the frequency response and the transient response.

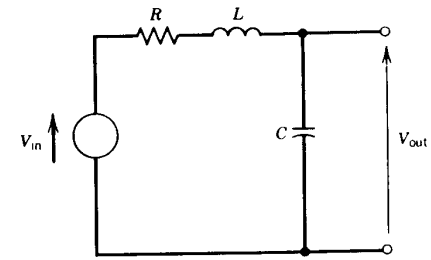

FIGURE 6.12 A series *RLC* circuit.

The transfer function of the series *RLC* circuit shown in Figure 6.12 can be written in the Laplace transform domain as

$$\frac{\mathscr{L}\{V_{out}(t)\}}{\mathscr{L}\{V_{in}(t)\}} = \frac{1}{1 + RCs + LCs^2}, \tag{6.38}$$

which can also be written

$$\frac{\mathscr{L}\{V_{out}(t)\}}{\mathscr{L}\{V_{in}(t)\}} = \frac{1}{(1 + s\tau_1)(1 + s\tau_2)}, \tag{6.39a}$$

where

$$\frac{1}{\tau_1} = \frac{R}{2L}(1 + \sqrt{1 - 4m}), \tag{6.39b}$$

$$\frac{1}{\tau_2} = \frac{R}{2L}(1 - \sqrt{1 - 4m}), \tag{6.39c}$$

and

$$m = \frac{L}{R^2C}. \tag{6.39d}$$

Three cases can be distinguished: There are two distinct real roots when $m < 0.25$; there are two equal real roots when $m = 0.25$; and there are two conjugate complex roots when $m > 0.25$.

The resulting frequency response is shown in Figure 6.13 for various values of $m = L/R^2C$. It can be shown that there is a peak in the magnitude versus frequency graphs when $m > 0.5$.

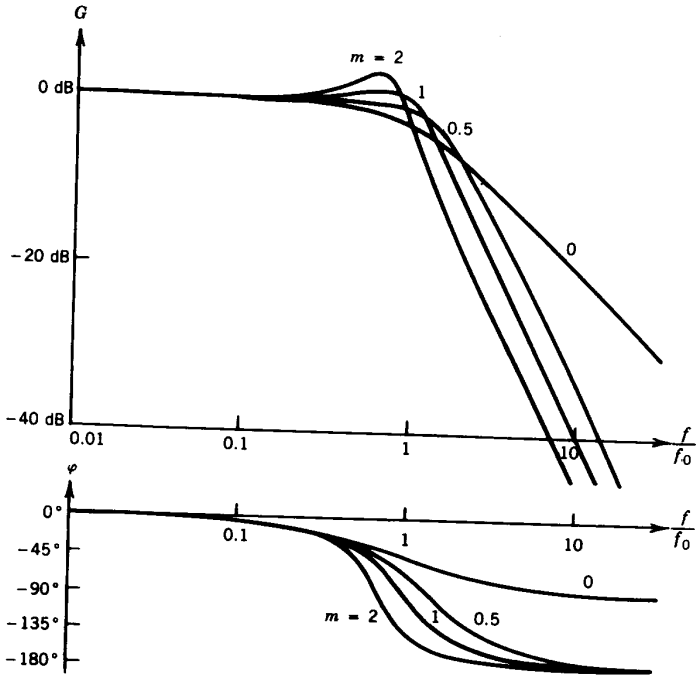

FIGURE 6.13 Bode plots $G \equiv 20\text{ dB}\ \log_{10}|V_{out}(f)/V_{in}(f)|$ and $\varphi \equiv \underline{/V_{out}(f)/V_{in}(f)}$ for the series *RLC* circuit of Figure 6.12 with various values of $m \equiv L/R^2C$ and with $f_0 \equiv 1/2\pi RC$.

When input voltage V_{in} is a step function with magnitude V_0, $\mathscr{L}\{V_{in}(t)\} = V_0/s$ and for times $t > 0$

$$V_{out}(t) = V_0\left[1 - \frac{(1+\sqrt{1-4m})e^{-(1-\sqrt{1-4m})t/2mRC}}{2\sqrt{1-4m}} + \frac{(1-\sqrt{1-4m})e^{-(1+\sqrt{1-4m})t/2mRC}}{2\sqrt{1-4m}}\right] \tag{6.40a}$$

when

$$m < 0.25; \tag{6.40b}$$

it is

$$V_{out}(t) = V_0\left[1 - \left(1 + \frac{2t}{RC}\right)e^{-2t/RC}\right] \tag{6.41a}$$

when

$$m = 0.25; \tag{6.41b}$$

and it is

$$V_{out}(t) = V_0\left\{1 - e^{-t/2mRC}\left[\cos(\sqrt{m-0.25}\,t/mRC) + \frac{\sin(\sqrt{m-0.25}\,t/mRC)}{2\sqrt{m-0.25}}\right]\right\} \tag{6.42a}$$

when

$$m > 0.25. \tag{6.42b}$$

Equations 6.40, 6.41, and 6.42 are illustrated in Figure 6.14 for various values of $m = L/R^2C$. The transients are free of overshoot and ringing when $m \leqslant 0.25$.

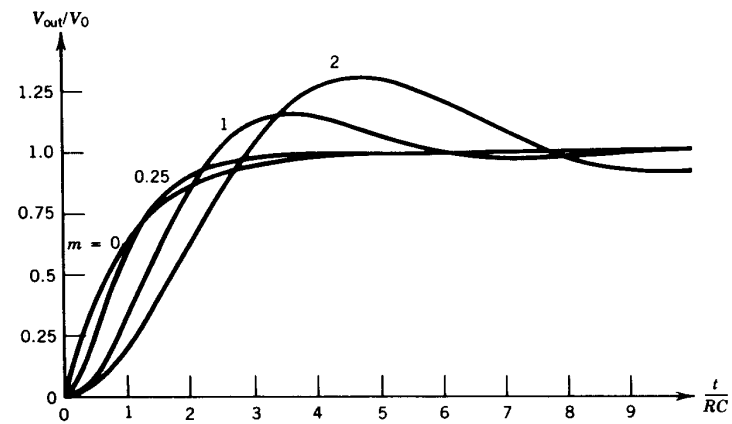

FIGURE 6.14 Transient response of the series *RLC* circuit of Figure 6.12 for a step-function input with magnitude V_0, for various values of $m = L/R^2C$.

Figure 6.15 shows, as functions of $m = L/R^2C$, various characteristics of the transients of Figure 6.14: The propagation delay of the 50% point, t_{50}; the 10%–90% rise time, t_{10-90}; and the percentage of ringing, ε, defined as $[(V_{out})_{max} - V_0]/V_0$ in Figure 6.14.

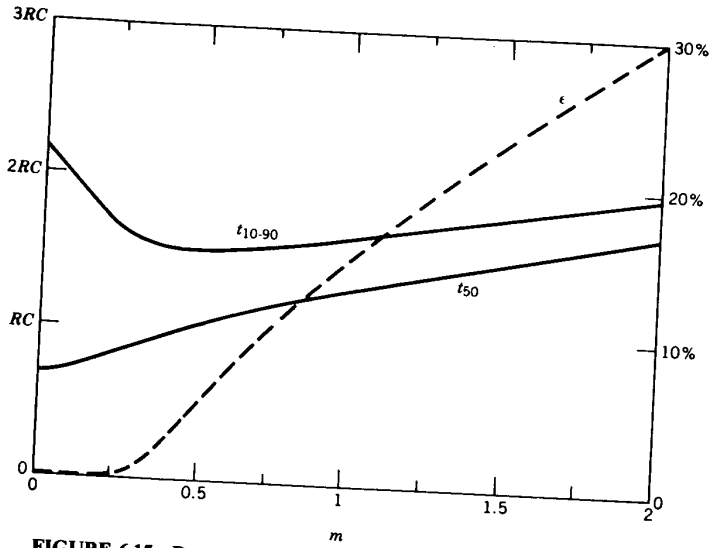

FIGURE 6.15 Propagation delay of the 50% point, t_{50}, 10%–90% rise time, $t_{10\text{-}90}$, and percentage of ringing, ε, for the transients of Figure 6.14, for various values of $m = L/R^2C$.

PROBLEMS

6.1 Show that the two forms of the modified lag network shown in Figure 6.1 are equivalent if $V_{in} = R_1 I_{in}$.

6.2 Derive Equations 6.1 and 6.4.

6.3 A modified lag network consists of the circuit of Figure 6.1*b* with $R_1 = 10{,}000\,\Omega$, $R_2 = 200\,\Omega$, and $C = 1000$ pF. What are the values of f_1 and f_2 in Equation 6.1? Sketch the Bode plots, using piecewise linear approximation for the gain. Repeat for $R_1 = 5000\,\Omega$.

6.4 Derive Equation 6.6.

6.5 Derive Equation 6.9 using Appendix A. [*Hint:* Break up the second fraction in Equation 6.8 into a sum of two parts, one part with a numerator of 1 and the other part with a numerator of sR_2C.]

6.6 Derive Equations 6.10 and 6.14.

6.7 A lead network consists of the circuit of Figure 6.4 with $R_1 = 10{,}000\,\Omega$, $R_2 = 100\,\Omega$, and $C = 10$ pF. What are the values of f_1 and f_2 in Equations 6.10b and 6.10c? Sketch the Bode plots, using piecewise linear approximation for the gain. Repeat for $R_1 = 5000\,\Omega$.

6.8 Derive Equation 6.15.

6.9 Derive Equation 6.18 using Appendix A. [*Hint:* Break up the third fraction in Equation 6.17 into a sum of two parts, one part with a numerator of 1 and the other part with a numerator of sCR_1.]

6.10 Sketch the Bode plots for Examples 6.1 and 6.3.

6.11 In the voltage divider network of Figure 6.7, $R_S = 10{,}000\,\Omega$, $R_P = 1000\,\Omega$, $C_S = 0.5$ pF, and $C_P = 10$ pF. What is $V_{out}(f)/V_{in}(f)$? Modify the circuit by the addition of a capacitance such that the transfer function $V_{out}(f)/V_{in}(f)$ is frequency-independent. Give the location and the value of the capacitance required.

6.12 Sketch output voltage $V_{out}(t)$ in the voltage divider network of Figure 6.7 if the input voltage is a step function $V_{in}(t) = (1\text{ V})u(t)$; $R_S = 1000\,\Omega$, $R_P = 2000\,\Omega$, and $C_P = 1000$ pF. Assume $C_S = 1000$ pF, 2000 pF, and 5000 pF.

6.13 Derive Equation 6.28a using Appendix A. [*Hint:* Break up the third fraction in Equation 6.27 into a sum of two parts, one part with a numerator of 1 and the other part with a numerator of $s\tau_1$.]

6.14 Verify the statements following Equation 6.28b at the end of Section 6.3.2.

6.15 Derive Equation 6.29.

6.16 Derive Equations 6.30a–d from Equation 6.29.

6.17 Show that τ_L and τ_U of Equations 6.30c and 6.30d are always real and positive.

6.18 Demonstrate that $\tau_L\tau_U = R_1C_1R_2C_2$ in Equations 6.30c and 6.30d.

6.19 Verify Equations 6.33a–d and Equations 6.34a and 6.34b.

***6.20** Derive Equation 6.32b from Equation 6.32a. [*Hint:* First show that $\tau_L > \tau_2$; then show that $\tau_2 > \tau_U$. Next, combine these results to obtain Equation 6.32b.]

6.21 Verify Figure 6.10.

6.22 Verify the results of Example 6.7.

6.23 Derive Equation 6.37 using Appendix A. [*Hint:* Break up the second fraction in Equation 6.36 into a sum of two parts, one part with a numerator of 1 and the other part with a numerator of $s\tau_2$.]

6.24 Show that in Equation 6.37

(a) $V_{out} = 0$ at $t = 0$;

(b) $V_{out} = V_0$ when $t \to \infty$.

6.25 Derive Equation 6.38.

*Optional problem.

6.26 Derive Equations 6.39a–d.

***6.27** (a) Compute and sketch into Figure 6.13 the magnitude and the phase of the frequency response for $m = 0.25$.
(b) Show that the slope of magnitude G in Figure 6.13 for $f/f_0 \gg 1$ is -20 dB/decade when $m = 0$ and it is -40 dB/decade when $m \neq 0$.

6.28 Demonstrate that the magnitudes in Figure 6.13 are peaked when $m > 0.5$. [*Hint:* Take the derivative of $|V_{out}(f)/V_{in}(f)|^2$ with respect to frequency and equate it to zero.]

6.29 Derive Equation 6.40a using Appendix A.

6.30 Derive Equation 6.41a using Appendix A.

6.31 Derive Equation 6.42a using Appendix A. [*Hint:* Use the identity $e^{jx} = \cos x + j \sin x$.]

6.32 Show that in Equations 6.40a, 6.41a, and 6.42a
(a) $V_{out} = 0$ at $t = 0$;
(b) $V_{out} = V_0$ when $t \to \infty$.

*Optional problem.

CHAPTER 7

Stability of Feedback Amplifiers

Frequency response and transient response of operational amplifiers were discussed in Chapters 5 and 6. The resulting frequency response and transient response, however, can be altered by the application of feedback. In some cases, the application of feedback results in an unstable system, that is, in a system that provides an output signal without an input signal. This chapter discusses limits and margins of stability in feedback amplifiers.

7.1 The Nyquist Criterion

Whether a noninverting feedback amplifier, characterized by a resulting amplification of

$$M_N = \frac{A}{1 + AF_N}, \tag{7.1}$$

is stable for a given A and F_N is determined by the roots of $1 + AF_N$: The system is stable if all roots have negative real parts. This criterion of stability can be shown to be equivalent to the *Nyquist criterion*, which is based on the *Nyquist diagram*. The Nyquist diagram is the line of AF_N plotted in the complex plane for frequencies, f, of $-\infty \leqslant f \leqslant +\infty$.

Thus, a Nyquist diagram requires the plotting of AF_N not only for positive frequencies but for negative frequencies as well. Fortunately, AF_N is easy to find for negative frequencies by use of AF_N for positive frequencies. This is because, in all frequency responses considered here, f and j always appear multiplied by each other. Thus, the same result is obtained by multiplying j by -1 as would be obtained by multiplying f by -1. Hence, AF_N for negative frequencies can be obtained by substituting $-$j for j, that is, by up–down mirroring the line of AF_N for positive frequencies with respect to the $\mathrm{Re}(AF_N)$ axis(horizontal axis).

The Nyquist criterion of stability can be expressed as follows: If A and F_N of Equation 7.1 describe stable systems, then the system described by M_N of Equation 7.1 is stable if and only if the Nyquist diagram of AF_N does not *encircle* the $-1 + j0$ point. Cases when A and/or F_N themselves describe unstable systems are not discussed here. (Continued on page 86.)

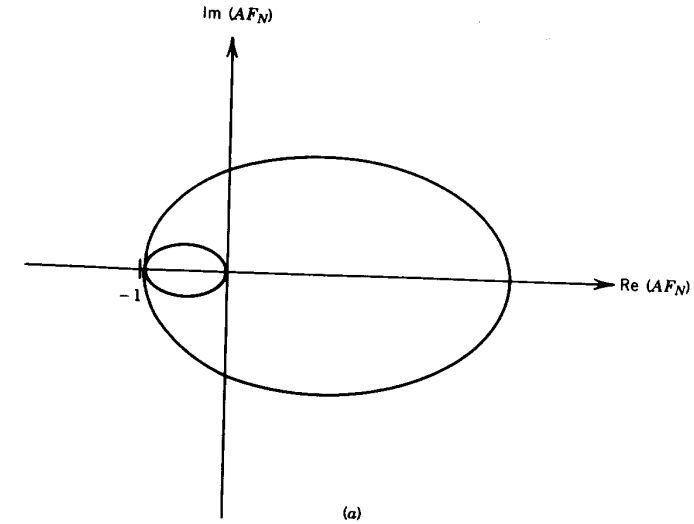

(a)

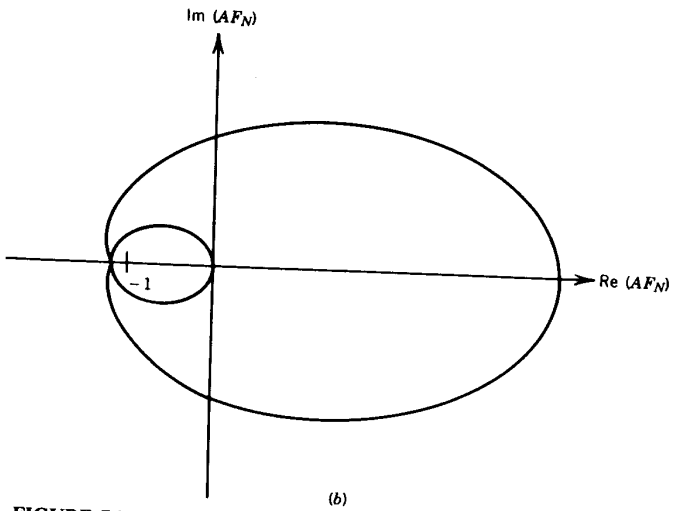

(b)

FIGURE 7.1 Nyquist diagrams of two stable systems (*a* and *c*) and two unstable systems (*b* and *d*).

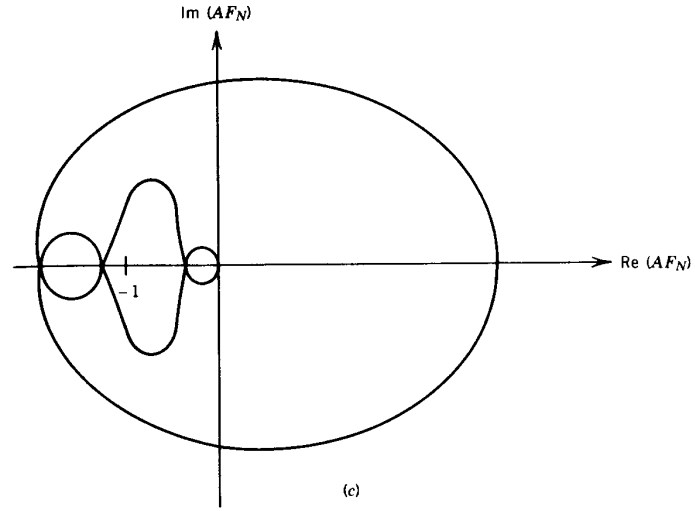

(c)

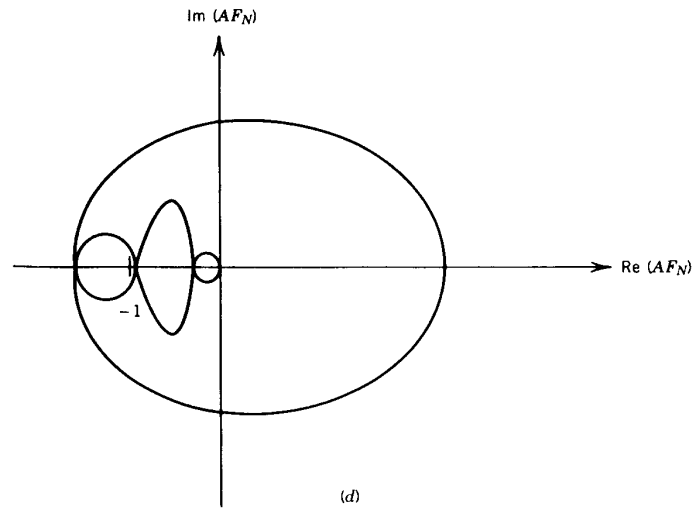

(d)

There can be several descriptions of the term *encircle*. For a physically realizable system, A is zero at $f = -\infty$ and at $f = +\infty$; hence, the Nyquist diagram is a closed curve.. This closed curve can be thought of as a loop of string, with a stake driven into the complex plane at the $-1 + j0$ point. If the loop of string can be removed (without lifting it over the stake), then it does not encircle the stake and the system is stable. Thus, in Figure 7.1*a* and in Figure 7.1*c* the loop does not encircle the $-1 + j0$ point and the system is stable, whereas in Figure 7.1*b* and in Figure 7.1*d* the loop encircles the $-1 + j0$ point and the system is unstable.* Alternatively, a vector can be drawn between the $-1 + j0$ point and a point on the line of AF_N in the complex plane. If the total angle traversed by this vector is zero as it moves along the line of AF_N from $f = -\infty$ to $f = +\infty$, then the loop does not encircle the $-1 + j0$ point and the system is stable.

EXAMPLE 7.1. An operational amplifier with an amplification of $A = A_{dc}/(1 + jf/f_0)$ is used as a noninverting feedback amplifier with a feedback return of F_N, where $F_N = F_{N,dc}$ is a positive real number. Thus, $AF_N = A_{dc}F_{N,dc}$ at $f = 0$; also, $AF_N = 0$ at $f = \infty$. It can be shown (see Problem 7.1) that for $f \geqslant 0$ the real part of AF_N, $\mathrm{Re}(AF_N)$, and the imaginary part of AF_N, $\mathrm{Im}(AF_N)$, are related as

$$\mathrm{Im}(AF_N) = -\sqrt{\left(\frac{A_{dc}F_{N,dc}}{2}\right)^2 - \left(\mathrm{Re}(AF_N) - \frac{A_{dc}F_{N,dc}}{2}\right)^2}.$$

This equation describes a semicircle below the $\mathrm{Re}(AF_N)$ axis that has a radius of $A_{dc}F_{N,dc}/2$ and its center at $A_{dc}F_{N,dc}/2 + j0$.

AF_N for negative frequencies is obtained by up–down mirroring the line of AF_N for positive frequencies. The result is a full circle, as shown in Figure 7.2.

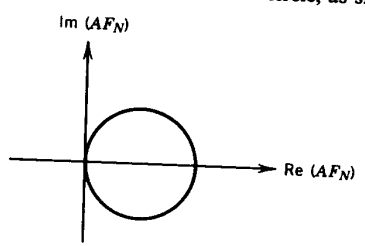

FIGURE 7.2 Nyquist diagram in Example 7.1.

Note that the phase of AF_N is always between $+90°$ and $-90°$ and it never reaches $-180°$. Since the $-1 + j0$ point has a phase of $-180°$, it cannot be encircled and the resulting feedback amplifier is stable for all values of A_{dc}, $F_{N,dc}$, and f_0.

*Figure 7.1 is located on pages 84 and 85.

The information presented in a Nyquist diagram for positive frequencies is identical to the information presented in a Bode plot, which uses only positive frequencies. The magnitude, G, of a Bode plot is related to AF_N of a Nyquist diagram as

$$G = 20\,\mathrm{dB}\,\log_{10}\sqrt{[\mathrm{Re}(AF_N)]^2 + [\mathrm{Im}(AF_N)]^2}. \tag{7.2}$$

Also, the phase, φ, of a Bode plot is related to AF_N of a Nyquist diagram as

$$\varphi = \arctan\left[\frac{\mathrm{Im}(AF_N)}{\mathrm{Re}(AF_N)}\right]. \tag{7.3}$$

EXAMPLE 7.2. The Nyquist diagram of Figure 7.2 in Example 7.1 describes a lag network response that has a magnitude of $A_{dc}F_{N,dc}$ at $f = 0$. The same information can be described using the Bode plot of Figure 5.3 with $20\,\mathrm{dB}\,\log_{10}(A_{dc}F_{N,dc})$ added to the labels of the G axis.

7.2 Lag Networks

Figure 7.3 illustrates the general characteristics of Nyquist diagrams corresponding to AF_N consisting of lag networks with transfer functions of

$$AF_N = \frac{A_{dc}F_{N,dc}}{1 + jf/f_1} \quad \text{(one lag network)}, \tag{7.4}$$

$$AF_N = \frac{A_{dc}F_{N,dc}}{(1 + jf/f_1)(1 + jf/f_2)} \quad \text{(two lag networks)}, \tag{7.5}$$

$$AF_N = \frac{A_{dc}F_{N,dc}}{(1 + jf/f_1)(1 + jf/f_2)(1 + jf/f_3)} \quad \text{(three lag networks)}, \tag{7.6}$$

$$AF_N = \frac{A_{dc}F_{N,dc}}{(1 + jf/f_1)(1 + jf/f_2)(1 + jf/f_3)(1 + jf/f_4)} \quad \text{(four lag networks)}, \tag{7.7}$$

where $F_{N,dc}$ is a positive real number.

It can be seen from Figure 7.3 that AF_N of Equations 7.4 and 7.5 always result in stable systems, whereas the stability of a system described by Equation 7.6 or 7.7 depends on the magnitude of $A_{dc}F_{N,dc}$ and on the values of the corner frequencies.

The criterion of stability is derived first for an amplifier consisting of three lag networks, that is, for one characterized by Equation 7.6. Separating the real and imaginary parts in the denominator of Equation 7.6 results in

$$AF_N = \frac{A_{dc}F_{N,dc}}{1 - \dfrac{f^2}{f_1f_2} - \dfrac{f^2}{f_1f_3} - \dfrac{f^2}{f_2f_3} + j\left(\dfrac{f}{f_1} + \dfrac{f}{f_2} + \dfrac{f}{f_3} - \dfrac{f^3}{f_1f_2f_3}\right)}. \tag{7.8}$$

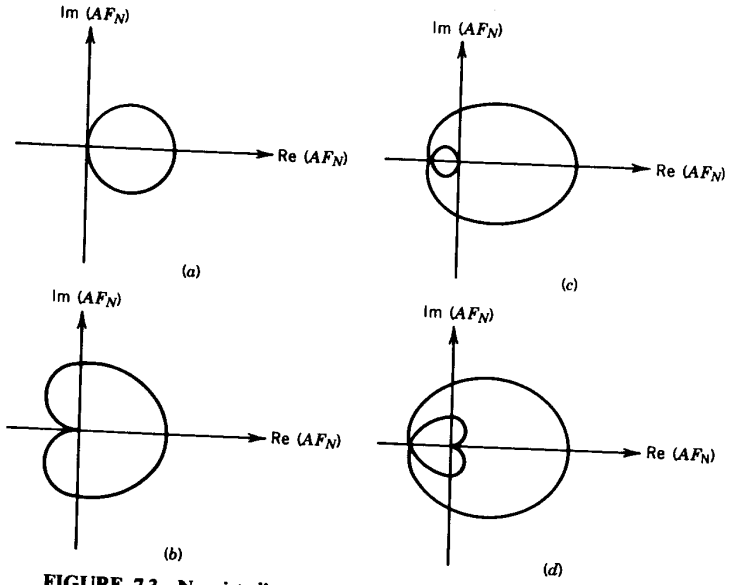

FIGURE 7.3 Nyquist diagrams of lag network responses: (*a*) one lag network, (*b*) two lag networks, (*c*) three lag networks, and (*d*) four lag networks.

Since $A_{dc}F_{N,dc}$ is real, Equation 7.8 is real if

$$\frac{f}{f_1} + \frac{f}{f_2} + \frac{f}{f_3} - \frac{f^3}{f_1 f_2 f_3} = 0. \tag{7.9}$$

One solution of Equation 7.9, is $f = 0$, corresponding to the intersection of the line of AF_N in Figure 7.3*c* with the positive real axis. It is of interest here, however, to determine whether the intersection of the line with the negative real axis is to the right or to the left of the $-1 + j0$ point. If $f \neq 0$, then Equation 7.9 can be divided by f, resulting in

$$f = \sqrt{f_1 f_2 + f_1 f_3 + f_2 f_3}. \tag{7.10}$$

This frequency represents the point where the line of AF_N intersects the negative real axis in Figure 7.3*c*. At this frequency, AF_N of Equation 7.8 is real:

$$AF_N = \frac{A_{dc}F_{N,dc}}{1 - \dfrac{f^2}{f_1 f_2} - \dfrac{f^2}{f_1 f_3} - \dfrac{f^2}{f_2 f_3}}. \tag{7.11}$$

The substitution of Equation 7.10 into Equation 7.11 results in

$$AF_N = \frac{-A_{dc}F_{N,dc}}{2 + \dfrac{f_2 + f_3}{f_1} + \dfrac{f_1 + f_3}{f_2} + \dfrac{f_1 + f_2}{f_3}}. \tag{7.12}$$

The system is stable if this is to the right of the $-1 + j0$ point, that is, if in Equation 7.12 $AF_N \geqslant -1$ (the stability is *marginal* when $AF_N = -1$). This results in the criterion

$$A_{dc}F_{N,dc} \leqslant 2 + \frac{f_2 + f_3}{f_1} + \frac{f_1 + f_3}{f_2} + \frac{f_1 + f_2}{f_3}. \tag{7.13a}$$

Thus, if a stable system is desired, the maximum permitted value of $A_{dc}F_{N,dc}$ is

$$(A_{dc}F_{N,dc})_{max} = 2 + \frac{f_2 + f_3}{f_1} + \frac{f_1 + f_3}{f_2} + \frac{f_1 + f_2}{f_3}. \tag{7.13b}$$

EXAMPLE 7.3. An operational amplifier is characterized by an amplification that can be described by three lag networks with corner frequencies of $f_1 = 1$ MHz, $f_2 = 4$ MHz, and $f_3 = 40$ MHz. Thus, Equation 7.13a becomes

$$A_{dc}F_{N,dc} \leqslant 2 + \frac{4\text{ MHz} + 40\text{ MHz}}{1\text{ MHz}} + \frac{1\text{ MHz} + 40\text{ MHz}}{4\text{ MHz}} + \frac{1\text{ MHz} + 4\text{ MHz}}{40\text{ MHz}}$$
$$= 56.4.$$

The amplifier has a dc amplification $A_{dc} = 4000$; hence, a stable system will result if the feedback return is

$$F_{N,dc} \leqslant \frac{56.4}{A_{dc}} = \frac{56.4}{4000} = 0.014.$$

This criterion of stability can also be expressed by stating that, in order to satisfy the inequality on dc feedback return $F_{N,dc}$ it is required that $M_{N,dc}$ be at least

$$M_{N,dc} = \frac{A_{dc}}{1 + A_{dc}F_{N,dc}} = \frac{4000}{1 + 56.4} = 70.$$

If $M_{N,dc}$ is less than 70, then $F_{N,dc}$ is greater than 0.014 and the system is unstable. Therefore, it can be concluded that this configuration is not suitable for resulting amplifications of $M_{N,dc} < 70$, because the feedback amplifier would oscillate at approximately the frequency given by Equation 7.10, that is, at

$$f = \sqrt{f_1 f_2 + f_1 f_3 + f_2 f_3}$$
$$= \sqrt{(1\text{ MHz})(4\text{ MHz}) + (1\text{ MHz})(40\text{ MHz}) + (4\text{ MHz})(40\text{ MHz})}$$
$$= 14.3\text{ MHz}.$$

The exact frequency and amplitude of the oscillation would depend on the nonlinear properties of the operational amplifier and will not be analyzed here.

In the case of an inverting feedback amplifier, by use of Equation 3.12, the resulting amplification is

$$M_{I,\mathrm{dc}} = \frac{-A}{1+(A+1)F_{I,\mathrm{dc}}} = \frac{-1}{1+F_{I,\mathrm{dc}}}\,\frac{A}{1+\dfrac{AF_{I,\mathrm{dc}}}{1+F_{I,\mathrm{dc}}}}, \tag{7.14}$$

and the criterion of stability reduces to the case of the noninverting amplifier if feedback return $F_{I,\mathrm{dc}} \ll 1$. If, however, $F_{I,\mathrm{dc}}$ is not much less than 1, it can be shown that the criterion of Equation 7.13a becomes

$$\frac{A_{\mathrm{dc}}F_{I,\mathrm{dc}}}{1+F_{I,\mathrm{dc}}} \leqslant 2 + \frac{f_2+f_3}{f_1} + \frac{f_1+f_3}{f_2} + \frac{f_1+f_2}{f_3}; \tag{7.15}$$

that is, $A_{\mathrm{dc}}F_{I,\mathrm{dc}}/(1+F_{I,\mathrm{dc}})$ has to be substituted in place of $A_{\mathrm{dc}}F_{N,\mathrm{dc}}$ in Equations 7.13a and 7.13b.*

In the limiting case when one of the corner frequencies is much lower than the other two, the transfer function of Equation 7.6 can be written

$$AF_N = \frac{A_{\mathrm{dc}}F_{N,\mathrm{dc}}}{(\mathrm{j}f/f_0)(1+\mathrm{j}f/f_1)(1+\mathrm{j}f/f_2)}. \tag{7.16a}$$

Note that corner frequency f_0 was introduced instead of f_3 of Equation 7.6 to emphasize that in Equation 7.16a

$$f_0 \ll f_1 \tag{7.16b}$$

and

$$f_0 \ll f_2. \tag{7.16c}$$

The separation of the real and imaginary parts in the denominator of Equation 7.16a results in

$$AF_N = \frac{A_{\mathrm{dc}}F_{N,\mathrm{dc}}}{-\dfrac{f^2}{f_0f_1} - \dfrac{f^2}{f_0f_2} + \mathrm{j}\left(\dfrac{f}{f_0} - \dfrac{f^3}{f_0f_1f_2}\right)}. \tag{7.17}$$

Since $A_{\mathrm{dc}}F_{N,\mathrm{dc}}$ is real, Equation 7.17 is real if

$$\frac{f}{f_0} - \frac{f^3}{f_0f_1f_2} = 0. \tag{7.18}$$

One solution of Equation 7.18 is $f = 0$, corresponding to the intersection of AF_N in Figure 7.3c with the positive real axis. If $f \neq 0$, Equation 7.18 can be divided by f, resulting in

$$f = \sqrt{f_1f_2}. \tag{7.19}$$

*In fact, with this substitution, all stability criteria derived in this chapter for noninverting amplifiers can be applied to inverting amplifiers (see Problem 7.11).

This frequency represents the point where the line of AF_N intersects the negative real axis in Figure 7.3c. At this frequency, AF_N of Equation 7.17 is real:

$$AF_N = \frac{A_{\mathrm{dc}}F_{N,\mathrm{dc}}}{-\dfrac{f^2}{f_0f_1} - \dfrac{f^2}{f_0f_2}}. \tag{7.20}$$

The substitution of Equation 7.19 into Equation 7.20 results in

$$AF_N = -A_{\mathrm{dc}}F_{N,\mathrm{dc}}\frac{f_0}{f_1+f_2}. \tag{7.21}$$

The system is stable if this point is to the right of the $-1+\mathrm{j}0$ point, that is, if in Equation 7.21 $AF_N \geqslant -1$. This results in the criterion

$$A_{\mathrm{dc}}F_{N,\mathrm{dc}} \leqslant (A_{\mathrm{dc}}F_{N,\mathrm{dc}})_{\max} = \frac{f_1+f_2}{f_0}. \tag{7.22}$$

EXAMPLE 7.4. A Type 2539 wideband monolithic operational amplifier is characterized by an amplification that can be described by three lag networks with corner frequencies of 20 kHz, 300 MHz, and 300 MHz.* Since 20 kHz $\ll$ 300 MHz, Equation 7.16a can be used with $f_0 = 20$ kHz, $f_1 = 300$ MHz, and $f_2 = 300$ MHz. Thus, according to Equation 7.22,

$$A_{\mathrm{dc}}F_{N,\mathrm{dc}} \leqslant \frac{f_1+f_2}{f_0} = \frac{300\ \mathrm{MHz} + 300\ \mathrm{MHz}}{20\ \mathrm{kHz}} = 30{,}000.$$

The amplifier has a typical dc amplification of $A_{\mathrm{dc}} = 30{,}000$; hence, a stable system will result if

$$F_{N,\mathrm{dc}} \leqslant \frac{30{,}000}{A_{\mathrm{dc}}} = \frac{30{,}000}{30{,}000} = 1.$$

This criterion of stability can also be expressed by stating that, in order to satisfy the inequality on feedback return $F_{N,\mathrm{dc}}$, it is required that

$$M_{N,\mathrm{dc}} = \frac{A_{\mathrm{dc}}}{1+A_{\mathrm{dc}}F_{N,\mathrm{dc}}} \geqslant \frac{30{,}000}{1+30{,}000} \cong 1.$$

Therefore, it can be concluded that the Type 2539 operational amplifier is marginally stable when used as a voltage follower, because small variations could make it unstable. Also, in this case, the approximate frequency of the resulting oscillation, from Equation 7.19, would be

$$f = \sqrt{f_1f_2} = \sqrt{(300\ \mathrm{MHz})(300\ \mathrm{MHz})} = 300\ \mathrm{MHz}.$$

*In reality, the characterization of a Type 2539 operational amplifier by these three corner frequencies is only an approximation.

In the case when amplification A consists of four lag networks:

$$A = \frac{A_{dc}}{(1 + jf/f_1)(1 + jf/f_2)(1 + jf/f_3)(1 + jf/f_4)}, \tag{7.23}$$

it can be shown that the criterion of stability can be written

$$\begin{aligned} A_{dc}F_{N,dc} &\leqslant (A_{dc}F_{N,dc})_{max} \\ &= 2 + \frac{f_1 f_2 f_3 f_4}{(f_1 + f_2 + f_3 + f_4)^2}\left[\frac{1}{f_1^2}\left(2 + \frac{f_3 + f_4}{f_2} + \frac{f_2 + f_4}{f_3} + \frac{f_2 + f_3}{f_4}\right)\right. \\ &\quad + \frac{1}{f_2^2}\left(2 + \frac{f_3 + f_4}{f_1} + \frac{f_1 + f_4}{f_3} + \frac{f_1 + f_3}{f_4}\right) \\ &\quad + \frac{1}{f_3^2}\left(2 + \frac{f_2 + f_4}{f_1} + \frac{f_1 + f_4}{f_2} + \frac{f_1 + f_2}{f_4}\right) \\ &\quad \left. + \frac{1}{f_4^2}\left(2 + \frac{f_2 + f_3}{f_1} + \frac{f_1 + f_3}{f_2} + \frac{f_1 + f_2}{f_3}\right)\right]. \end{aligned} \tag{7.24}$$

In the limiting case when one of the corner frequencies is much lower than the other three, the transfer function of Equation 7.23 can be written

$$AF_N = \frac{A_{dc}F_{N,dc}}{(jf/f_0)(1 + jf/f_1)(1 + jf/f_2)(1 + jf/f_3)}, \tag{7.25a}$$

with

$$f_0 \ll f_1, \tag{7.25b}$$

$$f_0 \ll f_2, \tag{7.25c}$$

and

$$f_0 \ll f_3, \tag{7.25d}$$

and the criterion of stability becomes

$$\begin{aligned} A_{dc}F_{N,dc} &\leqslant (A_{dc}F_{N,dc})_{max} \\ &= \frac{2f_1 f_2 f_3 + f_1^2(f_2 + f_3) + f_2^2(f_1 + f_3) + f_3^2(f_1 + f_2)}{f_0(f_1 + f_2 + f_3)^2}. \end{aligned} \tag{7.26}$$

Note that corner frequency f_0 was introduced instead of f_4 of Equation 7.24 to emphasize that f_0 is much lower than f_1, f_2, and f_3.

EXAMPLE 7.5. An operational amplifier is characterized by an amplification A of Equation 5.15 with $f_1 = 1$ MHz, $f_2 = 4$ MHz, $f_3 = 40$ MHz, and $A_{dc} = 4000$. The operational amplifier is used as a voltage follower, that is, feedback return $F_N = F_{N,dc} = 1$; hence, $A_{dc}F_{N,dc} = 4000$. It was shown in Example 7.3 that under these conditions the feedback amplifier is not stable. To obtain a stable system, a fourth lag network with $f_0 = 1$ kHz will be incorporated in AF_N (either inside or outside the operational amplifier). With these values of f_1, f_2, f_3, and f_0, the condition of stability given by Equation 7.26 becomes $A_{dc}F_{N,dc} \leqslant 4454$. Thus, an $A_{dc}F_{N,dc} = 4000$ results in a stable system.

Several other limiting cases are also of interest. When $f_3 = f_2$ in Equation 7.6,

$$AF_N = \frac{A_{dc}F_{N,dc}}{(1 + jf/f_1)(1 + jf/f_2)^2}, \tag{7.27}$$

and the criteria of stability, Equations 7.13a and 7.13b, become

$$A_{dc}F_{N,dc} \leqslant (A_{dc}F_{N,dc})_{max} = 4 + 2\left(\frac{f_2}{f_1} + \frac{f_1}{f_2}\right). \tag{7.28}$$

Also, when $f_2 = f_1$ in Equation 7.16a,

$$AF_N = \frac{A_{dc}F_{N,dc}}{(jf/f_0)(1 + jf/f_1)^2}, \tag{7.29}$$

and the criterion of stability, Equation 7.22, becomes

$$A_{dc}F_{N,dc} \leqslant (A_{dc}F_{N,dc})_{max} = \frac{2f_1}{f_0}. \tag{7.30}$$

When $f_4 = f_3 = f_2$ in Equation 7.23,

$$AF_N = \frac{A_{dc}F_{N,dc}}{(1 + jf/f_1)(1 + jf/f_2)^3}, \tag{7.31}$$

and the criterion of stability, Equation 7.24, becomes

$$A_{dc}F_{N,dc} \leqslant (A_{dc}F_{N,dc})_{max} = 8\frac{(1 + f_2/f_1)^3}{(1 + 3f_2/f_1)^2}. \tag{7.32}$$

Also, when $f_3 = f_2 = f_1$ in Equation 7.25a,

$$AF_N = \frac{A_{dc}F_{N,dc}}{(jf/f_0)(1 + jf/f_1)^3}, \tag{7.33}$$

and the criterion of stability, Equation 7.26, becomes

$$A_{dc}F_{N,dc} \leqslant (A_{dc}F_{N,dc})_{max} = \frac{8}{9}\frac{f_1}{f_0}. \tag{7.34}$$

7.3 Lag Compensation

It was seen in Example 7.5 how an amplification A that would result in an unstable system could be modified by the inclusion of an additional lag network to arrive at a stable system. The added lag network had a corner frequency f_0 that was lower than the other corner frequencies of the operational amplifier by a factor in the rough vicinity of $A_{dc}F_{N,dc}$. This modification is called *lag compensation*, compensation by a *dominant corner frequency*, or *dominant-pole compensation*, where the term *pole* refers to a corner frequency in the denominator of the transfer function.* When such a compensation is included as part of an operational amplifier, the result is an *internally compensated operational amplifier*.**

When an operational amplifier with an amplification A is used as a noninverting feedback amplifier, the resulting amplification is

$$M_N = \frac{A}{1 + AF_N}. \tag{7.35}$$

Depending on the characteristics of AF_N, the feedback amplifier may or may not be stable. If the operational amplifier without feedback is stable and it can be represented by a frequency-dependent amplification A, then it can be shown that the resulting amplification of the feedback amplifier, M_N, can always be made stable by modifying (compensating) amplification A by the addition of a lag network (Figure 5.1), resulting in a compensated $A_{comp}F_N$ that can be approximated as

$$A_{comp}F_N \cong \frac{AF_N}{1 + jf/f_0}. \tag{7.36}$$

EXAMPLE 7.6. The amplification of an operational amplifier can be represented as $A = A_{dc}/(1 + jf/f_1)^4$ with $f_1 = 1$ MHz and $A_{dc} = 10{,}000$. The amplifier is used as a noninverting feedback amplifier with a feedback return of $F_N = F_{N,dc} = 0.1$.

Without any compensation, at a frequency f_1 phase $\angle A = (-4)(45°) = -180°$ and magnitude $|AF_N| = (10{,}000)(0.1)/4 = 250 > 1$. Thus, the feedback amplifier is not stable.

Modifying A by the addition of a lag network with a corner frequency $f_0 = 100$ Hz (see Equation 7.36), the compensated $|A_{comp}F_N|$ becomes unity at approximately $f_0 A_{dc}F_N = (100\text{ Hz})(10{,}000)(0.1) = 100$ kHz. At this frequency, phase $\angle AF_N \approx -113°$; hence, the feedback amplifier is stable.

*Similarly, the term *zero* refers to a corner frequency in the numerator of a transfer function.

**Operational amplifiers that are not internally compensated are often called *decompensated operational amplifiers*.

In the case of an operational amplifier with an amplification of

$$A = \frac{A_{dc}}{(1 + jf/f_1)^3}, \tag{7.37}$$

compensated by the addition of a lag network with a corner frequency f_0, the resulting (compensated) $A_{comp}F_N$ is

$$A_{comp}F_N = \frac{A_{dc}F_{N,dc}}{(1 + jf/f_0)(1 + jf/f_1)^3}. \tag{7.38}$$

It is seen from Equation 7.32 that this results in a stable system if

$$A_{dc}F_{N,dc} \leqslant 8\frac{(1 + f_1/f_0)^3}{(1 + 3f_1/f_0)^2}. \tag{7.39}$$

For a stable system with $A_{dc}F_{N,dc} \gg 1$, it can be shown that $f_0 \ll f_1$ and the condition of Equation 7.39 becomes

$$A_{dc}F_{N,dc} \leqslant \frac{8}{9}\frac{f_1}{f_0}. \tag{7.40}$$

Alternatively, for a given feedback factor $A_{dc}F_{N,dc} \gg 1$ and for a given f_1,

$$f_0 \leqslant \frac{8}{9}\frac{f_1}{A_{dc}F_{N,dc}} \tag{7.41}$$

is the criterion of stability.

For an operational amplifier with given A_{dc} and f_1, the required corner frequency f_0 is lowest when $F_{N,dc}$ is highest, which is the case of the voltage follower where $F_{N,dc} = 1$. Thus, the criterion of stability for a voltage follower becomes

$$f_0 \leqslant (f_0)_{min} = \frac{8}{9}\frac{f_1}{A_{dc}}; \tag{7.42a}$$

$$F_{N,dc} = 1. \tag{7.42b}$$

The incorporation of a lag network with a corner frequency $(f_0)_{min}$ given by Equation 7.42a results in a stable system for all values of $F_{N,dc}$. Such an internally compensated operational amplifier can be used for any resulting dc amplification between 1 and A_{dc} with only two external resistors R_F and R_I, and without a need for any additional external component. However, as will be seen in Chapter 8, this convenience is attained at a cost whereby the bandwidth of the resulting feedback amplifier is lower than the bandwidth attainable by other compensation methods using additional external components.

7.4 Lead–Lag Compensation

Lead-lag compensation consists of the inclusion of an external frequency-dependent feedback network, as shown in Figure 7.4. According to Equations 6.19a–c, the feedback return F_N in Figure 7.4 is

$$F_N = F_{N,dc}\frac{1 + jf/f_L}{1 + jf/f_U}, \tag{7.43a}$$

where

$$F_{N,dc} = \frac{R_I}{R_F + R_I}, \tag{7.43b}$$

$$f_L = \frac{1}{2\pi R_F C_F}, \tag{7.43c}$$

and

$$f_U = \frac{1}{2\pi \dfrac{R_F R_I}{R_F + R_I}(C_F + C_I)}. \tag{7.43d}$$

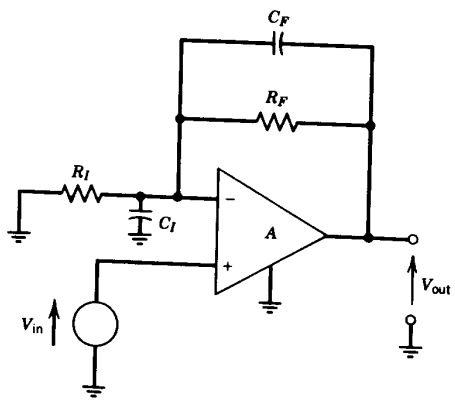

FIGURE 7.4 Lead–lag compensation.

Note that the subscripts have been changed from those of Equation 6.19. Also, in the lead–lag compensation circuit of Figure 7.4, f_L and f_U are chosen such that

$$f_L < f_U, \tag{7.44}$$

hence the subscripts L and U (lower and upper). The ratio f_U/f_L can be written, based on Equation 6.20,

$$\frac{f_U}{f_L} = \frac{1}{F_{N,dc}}\frac{1}{1 + C_I/C_F}; \tag{7.45}$$

hence,

$$\frac{f_U}{f_L} \leqslant \frac{1}{F_{N,dc}}. \tag{7.46}$$

When $A_{dc}F_{N,dc} \gg 1$, then $M_{N,dc} \cong 1/F_{N,dc}$, and Equation 7.46 becomes

$$\frac{f_U}{f_L} \leqslant M_{N,dc}. \tag{7.47}$$

Thus, Equation 7.47 limits the ratio of f_U/f_L to the resulting dc amplification of the feedback amplifier. The limit of $f_U/f_L = M_{N,dc}$ can be approached when the ratio C_I/C_F is small, that is, when the sum C_I of the input capacitance of the operational amplifier and of stray capacitances is small compared to feedback capacitance C_F.

EXAMPLE 7.7. A feedback amplifier uses the lead–lag compensation of Figure 7.4 with $F_{N,dc} = 0.01$ and $C_I = 5$ pF. Thus, according to Equation 7.46, $f_U/f_L \leqslant 1/F_{N,dc} = 1/0.01 = 100$. Corner frequency f_L is chosen as $f_L = 1$ MHz. Also, from Equation 7.43c, $C_F = 1/2\pi R_F f_L$.

When the dc feedback return, $F_{N,dc}$, is realized by $R_F = 1980\,\Omega$ and $R_I = 20\,\Omega$, then $C_F = 1/[2\pi(1980\,\Omega)(1\text{ MHz})] = 80$ pF. Thus, according to Equation 7.45, $f_U/f_L = (1/0.01)/(1 + 5\text{ pF}/80\text{ pF}) = 94.1$, close to the maximum possible 100 given by Equation 7.46. Also, with $f_L = 1$ MHz, $f_U = 94.1 f_L = (94.1)(1\text{ MHz}) = 94.1$ MHz. Note that the Bode plots of F_N in this case are close to those of Figure 6.5 with $f_1 = 1$ MHz.

When the dc feedback return, $F_{N,dc}$, is realized by $R_F = 19{,}800\,\Omega$ and $R_I = 200\,\Omega$, then $C_F = 1/[2\pi(19{,}800\,\Omega)(1\text{ MHz})] = 8$ pF. Thus, according to Equation 7.45, $f_U/f_L = (1/0.01)/(1 + 5\text{ pF}/8\text{ pF}) = 61.5$, significantly less than the maximum possible 100 given by Equation 7.46. Also, in this case, $f_U = 61.5 f_L = (61.5)(1\text{ MHz}) = 61.5$ MHz. The Bode plots of this case are the subject of Problem 7.16.

The value of corner frequency f_L is often chosen to be in the vicinity of a corner frequency of the operational amplifier. The discussion here is limited to the simplest case when f_L equals a corner frequency of the operational amplifier, thus canceling its effect (*pole-zero cancellation*).*

*This limitation will be removed and the general case will be discussed later in the book.

If the amplification of an operational amplifier is given by Equation 7.37 as

$$A = \frac{A_{dc}}{(1 + jf/f_1)^3} \tag{7.48}$$

and lead–lag compensation in the form of Equation 7.43a is applied, the compensated AF_N, $A_{comp}F_N$, can be written

$$A_{comp}F_N = \frac{A_{dc}F_{N,dc}}{(1 + jf/f_1)^3} \frac{1 + jf/f_L}{1 + jf/f_U}. \tag{7.49}$$

When f_L is chosen to equal f_1, Equation 7.49 becomes

$$A_{comp}F_N = \frac{A_{dc}F_{N,dc}}{(1 + jf/f_1)^2(1 + jf/f_U)}, \tag{7.50}$$

where $f_U > f_1$.

EXAMPLE 7.8. An operational amplifier has an amplification of $A = A_{dc}/(1 + jf/f_1)^3$ with $A_{dc} = 10{,}000$ and $f_1 = 1$ MHz. It is used as a noninverting feedback amplifier with a feedback return $F_{N,dc} = 0.01$. Thus, the feedback factor is $A_{dc}F_{N,dc} = (10{,}000)(0.01) = 100$ and, according to Equation 7.13a, the feedback amplifier is not stable.

To make the feedback amplifier stable, lead–lag compensation in the form of Equation 7.43a is introduced with $f_L = 1$ MHz. It can be shown that the criterion of stability, Equation 7.28, becomes approximately

$$f_U \geqslant A_{dc}F_{N,dc}\frac{f_1}{2} = 100\,\frac{1\text{ MHz}}{2} = 50\text{ MHz}.$$

It was seen in Example 7.7 that $f_U = 94.1$ MHz when $R_F = 1980\,\Omega$ and $R_I = 20\,\Omega$, and $f_U = 61.5$ MHz when $R_F = 19{,}800\,\Omega$ and $R_I = 200\,\Omega$. Since both of these cases provide $f_U \geqslant 50$ MHz, they both result in a stable feedback amplifier; however, the latter case provides a smaller margin of safety.

7.5 Conditional Stability

All feedback amplifiers considered thus far could be made stable by lowering A_{dc} of the operational amplifier while holding all other parameters constant. Consider, however, a feedback amplifier characterized by the Nyquist diagram of Figure 7.1*c*. The line of AF_N in Figure 7.1*c* does not encircle the $-1 + j0$ point; hence, the feedback amplifier is stable. However, if A_{dc} is lowered, the diagram shrinks and the unstable feedback amplifier characterized by Figure 7.1*d* may result.

Thus, the stability of a feedback amplifier characterized by the Nyquist diagram of Figure 7.1*c* requires not only that A_{dc} be below a certain value, but the stability is also conditional on not having A_{dc} too low. Such amplifiers are called *conditionally stable*, as opposed to *absolutely stable* feedback amplifiers—such as characterized by the Nyquist diagram of Figure 7.1*a*, where the magnitude $|AF_N| < 1$ for *all* frequencies when the phase $\varphi = -180°$. Next, feedback factor AF_N of a conditionally stable feedback amplifier is described.

Consider the amplifier with the feedback factor

$$AF_N = \frac{A_{dc}F_{N,dc}}{[1 + jf/f_1]^3}\left[\frac{1 + jf/(f_C/w)}{1 + jf/(f_C w)}\right]^2, \tag{7.51}$$

where *crossover frequency* f_C and $w > 1$ are positive real numbers to be specified later. AF_N of Equation 7.51 includes the responses of three identical lag networks with corner frequencies f_1, as well as of two identical lead–lag networks with $f_L = f_C/w$ and $f_U = f_C w$. Such feedback factors occur in systems that include more than one operational amplifier.

When $f_1 \ll f_C/w$, Equation 7.51 can be approximated for $f \geqslant f_C/w$ as

$$AF_N = \frac{A_{dc}F_{N,dc}}{(jf/f_1)^3}\left[\frac{1 + jf/(f_C/w)}{1 + jf/(f_C w)}\right]^2. \tag{7.52}$$

Also, if $A_{dc}F_{N,dc}$ is chosen as

$$A_{dc}F_{N,dc} = \frac{1}{w^2}\frac{f_C^3}{f_1^3}, \tag{7.53}$$

Equation 7.52 becomes

$$AF_N = \frac{1}{w^2}\frac{1}{(jf/f_C)^3}\left[\frac{1 + jf/(f_C/w)}{1 + jf/(f_C w)}\right]^2. \tag{7.54}$$

Figure 7.5 shows the Bode plots of Equation 7.54 with $w = 5$.

It can be shown (see Problem 7.19) that, for any value of w, at $f = f_C$ the magnitude of AF_N of Equation 7.54 becomes 1 and the phase of AF_N becomes $-90° - 4\arctan(1/w)$. It can also be shown (see Problem 7.20) that the feedback amplifier is stable if $w > 1 + \sqrt{2} = 2.41$ in Equation 7.54. The upper and lower limits of $A_{dc}F_{N,dc}$ required for stability are the subject of Problem 7.21.

7.6 Phase Margins

The Nyquist criterion has been found to be a useful tool for determining the limits of stability, and safety margins could be provided by staying away from these limits. However, the Nyquist criterion does not always provide a reliable indication of safety margins.

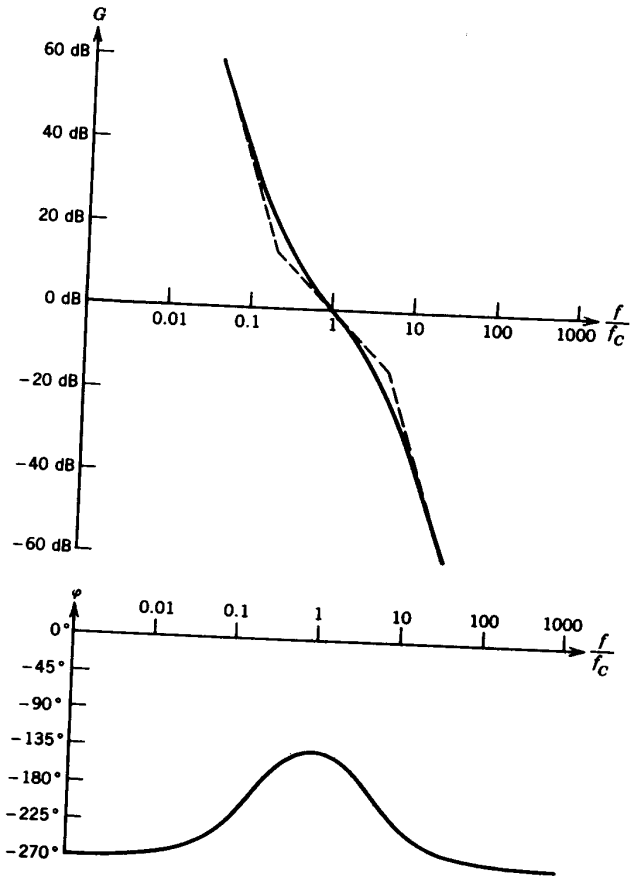

FIGURE 7.5 Bode plots of AF_N of Equation 7.54 with $w = 5$: $G \equiv 20\,\text{dB}\,\log_{10}|AF_N|$ and $\varphi \equiv \underline{/AF_N}$.

EXAMPLE 7.9. The frequency response of an amplifier consisting of two transistor stages is represented by Equation 7.5. According to the Nyquist criterion, such an amplifier is always stable. However, in reality a transistor amplifier stage also has an *excess phase* that makes the actual phase 1 %–10 % more negative than the phase computed from Equation 7.5. Thus, the actual phase may become several degrees more negative than $-180°$, and the feedback amplifier may become unstable.

An alternative approach imposes a requirement on the phase that is stricter than the Nyquist criterion. It requires that, at a frequency where $|AF_N| = 1$, the phase φ should be more positive than or equal to $-180° + \varphi_M$, where φ_M is positive. Thus, it is required that

$$\varphi_{|AF_N|=1} \geqslant -180° + \varphi_M, \tag{7.55}$$

where φ_M is a positive *phase margin* that is typically between 30° and 60°. Note that Equation 7.55 reverts to the Nyquist criterion if $\varphi_M = 0$.

As was also the case for the Nyquist criterion, phase margins can be directly evaluated graphically by use of Bode plots. In what follows here, phase margins of several simple transfer functions are considered.

7.6.1 Two Lag Networks

The transfer function of Equation 7.5 consists of two lag network responses and is always stable according to the Nyquist criterion. Its phase φ can be written (see Problem 7.24)

$$\varphi = \underline{/AF_N} = -\arctan\left(\frac{f}{f_1}\right) - \arctan\left(\frac{f}{f_2}\right). \tag{7.56}$$

To find the frequency where $|AF_N| = 1$, the phase given by Equation 7.56 is substituted into Equation 7.55, resulting in

$$-\arctan\left(\frac{f}{f_1}\right) - \arctan\left(\frac{f}{f_2}\right) \geqslant -180° + \varphi_M. \tag{7.57}$$

It can be shown (see Problem 7.25) that, for $0 < \varphi_M < 90°$ and $f > 0$, f can be expressed from Equation 7.57 as

$$f \leqslant \frac{f_1 + f_2}{2}\cot\varphi_M + \sqrt{\left(\frac{f_1 + f_2}{2}\cot\varphi_M\right)^2 + f_1 f_2}. \tag{7.58}$$

The magnitude $|AF_N|$ can be written, from Equation 7.5,

$$|AF_N| = A_{dc}F_{N,dc}\frac{1}{\sqrt{1 + \left(\frac{f}{f_1}\right)^2}}\frac{1}{\sqrt{1 + \left(\frac{f}{f_2}\right)^2}}; \tag{7.59}$$

hence, the criterion $|AF_N| = 1$ becomes

$$A_{dc}F_{N,dc} = \sqrt{1+\left(\frac{f}{f_1}\right)^2}\sqrt{1+\left(\frac{f}{f_2}\right)^2} \tag{7.60}$$

with f given by Equation 7.58. Equations 7.58 and 7.60 can also be combined as

$$A_{dc}F_{N,dc} \leqslant (A_{dc}F_{N,dc})_{max} = \sqrt{1+\left(\frac{f}{f_1}\right)^2}\sqrt{1+\left(\frac{f}{f_2}\right)^2}, \tag{7.61a}$$

where

$$f = \frac{f_1+f_2}{2}\cot\varphi_M + \sqrt{\left(\frac{f_1+f_2}{2}\cot\varphi_M\right)^2 + f_1 f_2}. \tag{7.61b}$$

EXAMPLE 7.10. Feedback factor AF_N of a feedback amplifier is represented by Equation 7.5 with $f_1 = 1$ MHz and $f_2 = 4$ MHz. What is the maximum permitted value of $A_{dc}F_{N,dc}$ for $\varphi_M = 45°$?

Using Equation 7.61b,

$$f = \frac{1\text{ MHz}+4\text{ MHz}}{2}\cot 45° + \sqrt{\left(\frac{1\text{ MHz}+4\text{ MHz}}{2}\cot 45°\right)^2 + (1\text{ MHz})(4\text{ MHz})}$$
$$= 5.7\text{ MHz}.$$

By use of Equation 7.61a,

$$(A_{dc}F_{N,dc})_{max} = \sqrt{1+\left(\frac{5.7\text{ MHz}}{1\text{ MHz}}\right)^2}\sqrt{1+\left(\frac{5.7\text{ MHz}}{4\text{ MHz}}\right)^2} \cong 10.$$

In the limiting case when one of the corner frequencies is much lower than the other, Equation 7.5 can be written

$$AF_N = \frac{A_{dc}F_{N,dc}}{(jf/f_0)(1+jf/f_1)}. \tag{7.62a}$$

Note that corner frequency f_0 was introduced instead of f_2 of Equation 7.5 to emphasize that in Equation 7.62a

$$f_0 \ll f_1. \tag{7.62b}$$

The phase of Equation 7.62a can be written

$$\varphi = \underline{/AF_N} = -90° - \arctan\frac{f}{f_1}. \tag{7.63}$$

To find the frequency where $|AF_N| = 1$, the phase given by Equation 7.63 is substituted into Equation 7.55, resulting in

$$-90° - \arctan\left(\frac{f}{f_1}\right) \geqslant -180° + \varphi_M, \tag{7.64}$$

which can also be written

$$f \leqslant f_1 \cot\varphi_M. \tag{7.65}$$

The magnitude $|AF_N|$ can be written, from Equation 7.62a,

$$|AF_N| = A_{dc}F_{N,dc}\frac{f_0}{f}\frac{1}{\sqrt{1+\left(\frac{f}{f_1}\right)^2}}. \tag{7.66}$$

The combination of Equations 7.65 and 7.66 with $|AF_N| = 1$ results in

$$A_{dc}F_{N,dc} \leqslant (A_{dc}F_{N,dc})_{max} = \frac{f_1}{f_0}\cot\varphi_M\sqrt{1+\cot^2\varphi_M}. \tag{7.67}$$

EXAMPLE 7.11. A Type 9914A wideband hybrid operational amplifier is characterized by feedback factor AF_N that can be approximated by Equation 7.62a with $A_{dc} = 5000$, $f_0 = 0.5$ MHz, and $f_1 = 50$ MHz. What is the maximum permitted value of $A_{dc}F_{N,dc}$ for $\varphi_M = 45°$?

Using Equation 7.67,

$$(A_{dc}F_{N,dc})_{max} = \frac{50\text{ MHz}}{0.5\text{ MHz}}\cot 45°\sqrt{1+\cot^2 45°} = 141.4.$$

Thus, the maximum permitted value of $F_{N,dc}$ is

$$(F_{N,dc})_{max} = \frac{141.4}{A_{dc}} = \frac{141.4}{5000} \cong 0.028$$

and the minimum permitted value of the resulting amplification $M_{N,dc}$ is approximately

$$(M_{N,dc})_{min} \cong \frac{1}{(F_{N,dc})_{max}} = \frac{1}{0.028} \cong 35.$$

The phase margins may be improved by the introduction of lead–lag compensation of the form of Equations 7.43a–d with $f_L < f_U$. For example, if f_L is chosen to equal f_1 of Equation 7.62a, the resulting feedback factor becomes

$$AF_N = \frac{A_{dc}F_{N,dc}}{(jf/f_0)(1+jf/f_U)}, \tag{7.68}$$

and Equation 7.67 becomes

$$A_{dc}F_{N,dc} \leqslant (A_{dc}F_{N,dc})_{max} = \frac{f_U}{f_0}\cot\varphi_M\sqrt{1+\cot^2\varphi_M}. \tag{7.69}$$

EXAMPLE 7.12. Feedback return F_N of Example 7.11 is changed from a frequency-independent $F_{N,dc}$ to the F_N given by Equation 7.43a with $f_L = 50$ MHz and $f_U = 250$ MHz. Thus, for $\varphi_M = 45°$,

$$(A_{dc}F_{N,dc})_{max} = \frac{250\text{ MHz}}{0.5\text{ MHz}}\cot 45°\sqrt{1+\cot^2 45°} = 707,$$

$$(F_{N,dc})_{max} = \frac{707}{A_{dc}} = \frac{707}{5000} \cong 0.1414$$

and

$$(M_{N,dc})_{min} \cong \frac{1}{(F_{N,dc})_{max}} = \frac{1}{0.1414} \cong 7.$$

Note that this is a significant improvement over the $(M_{N,dc})_{min} = 35$ of Example 7.11.

According to Equation 7.69, it is desirable to have f_U as large as possible in order to be able to use a large value of $A_{dc}F_{N,dc}$. However, the value of f_U is constrained by Equations 7.43a–d. It will now be assumed, and seen later, that in practice the limitations on the choice of feedback capacitance C_F do not limit the choice of other values in Equations 7.43a–d. Thus, C_F is eliminated by combining Equations 7.43b, 7.43c, and 7.43d, resulting in

$$\frac{1}{f_U} = F_{N,dc}\left(\frac{1}{f_L} + 2\pi R_F C_I\right); \tag{7.70}$$

the required value of C_F is given, from Equation 7.43c, as

$$C_F = \frac{1}{2\pi R_F f_L}. \tag{7.71}$$

To have f_U large, $1/f_U$ of Equation 7.70 has to be small. With corner frequency f_L chosen to equal a corner frequency of the operational amplifier, for a given $F_{N,dc}$ the only remaining avenue to reduce $1/f_U$ in Equation 7.70 is to reduce $R_F C_I$. It can be seen in Figure 7.4 that capacitance C_I is the sum of the operational amplifier input capacitance and of stray capacitances; hence, C_I cannot be reduced below a minimum value. This leaves feedback resistor R_F to be reduced. Resistance R_F can be expressed from Equation 7.70 as

$$R_F = \frac{1}{2\pi C_I f_L}\left(\frac{f_L}{F_{N,dc}f_U} - 1\right), \tag{7.72}$$

where $R_F \geqslant 0$ as a consequence of Equation 7.46. Note that the value of R_F given by Equation 7.72 may be impractically low, because the current required for a given output voltage swing may exceed the current capability of the output of the operational amplifier. Output current limitations of operational amplifiers will be discussed in Chapter 10.

EXAMPLE 7.13. In the feedback amplifier of Example 7.12, $f_L = 50$ MHz, $f_U = 250$ MHz, and $F_{N,dc} = (F_{N,dc})_{max} = 0.1414$. Also, $C_I = 10$ pF. Thus, according to Equation 7.72,

$$R_F = \frac{1}{2\pi(10\text{ pF})(50\text{ MHz})}\left(\frac{50\text{ MHz}}{(0.1414)(250\text{ MHz})} - 1\right) \cong 132\,\Omega.$$

The required value of C_F, from Equation 7.71, is

$$C_F = \frac{1}{2\pi(132\,\Omega)(50\text{ MHz})} \cong 24\text{ pF}.$$

The value of R_I can be obtained from Equation 7.43b as

$$R_I = \frac{F_{N,dc}}{1 - F_{N,dc}}R_F = \frac{0.1414}{1 - 0.1414}132\,\Omega \cong 22\,\Omega.$$

Thus,

$$R_F + R_I = 132\,\Omega + 22\,\Omega = 154\,\Omega.$$

As will be seen in Chapter 10, this resistance is sufficiently low to limit the voltage swing at the output of the Type 9914A wideband hybrid operational amplifier.

Consider the amplifier with the feedback factor

$$AF_N = \frac{A_{dc}F_{N,dc}}{(1 + jf/f_1)^2}\,\frac{1 + jf/(f_C/w)}{1 + jf/(f_C w)}, \tag{7.73}$$

where crossover frequency f_C and $w > 1$ are positive real numbers to be specified later. AF_N of Equation 7.73 includes the responses of two identical lag networks with corner frequency f_1, as well as of a lead–lag compensation with $f_L = f_C/w$ and $f_U = f_C w$. Note that the resulting feedback amplifier is always stable according to the Nyquist criterion.

When $f_1 \ll f_C/w$, Equation 7.73 can be approximated for $f \geqslant f_C/w$ as

$$AF_N = \frac{A_{dc}F_{N,dc}}{(jf/f_1)^2}\,\frac{1 + jf/(f_C/w)}{1 + jf/(f_C w)}. \tag{7.74}$$

Also, if $A_{dc}F_{N,dc}$ is chosen as

$$A_{dc}F_{N,dc} = \frac{1}{w}\frac{f_C^2}{f_1^2}, \tag{7.75}$$

Equation 7.74 becomes

$$AF_N = \frac{1}{w}\frac{1}{(jf/f_C)^2}\frac{1 + jf/(f_C/w)}{1 + jf/(f_C w)}. \tag{7.76}$$

Figure 7.6 shows the Bode plots of Equation 7.76 with $w = 3$.

It can be shown (see Problem 7.32) that, for any value of w, at frequency f_C the magnitude of AF_N of Equation 7.76 becomes 1 and the phase of AF_N becomes $-90° - 2\arctan(1/w)$. Thus, by use of Equation 7.55,

$$-90° - 2\arctan\left(\frac{1}{w}\right) \geqslant -180° + \varphi_M; \tag{7.77a}$$

hence,

$$\varphi_M \leqslant 90° - 2\arctan\left(\frac{1}{w}\right). \tag{7.77b}$$

Also, from Equation 7.77b,

$$w \geqslant \frac{1 + \tan\left(\frac{\varphi_M}{2}\right)}{1 - \tan\left(\frac{\varphi_M}{2}\right)}. \tag{7.78}$$

EXAMPLE 7.14. In Figure 7.6, $w = 3$. Thus, according to Equation 7.77b,

$$\varphi_M \leqslant 90° - 2\arctan\left(\frac{1}{3}\right) = 53.1°;$$

that is, the Bode plots of Figure 7.6 satisfy all phase margin requirements of $\varphi_M \leqslant 53.1°$. If the phase margin requirement is $\varphi_M = 45°$ then, from Equation 7.78,

$$w \geqslant \frac{1 + \tan\left(\frac{45°}{2}\right)}{1 - \tan\left(\frac{45°}{2}\right)} = \frac{1 + (\sqrt{2} - 1)}{1 - (\sqrt{2} - 1)} = 1 + \sqrt{2} = 2.41;$$

that is, any $w \geqslant 2.41$ satisfies the phase margin requirement of $\varphi_M = 45°$.

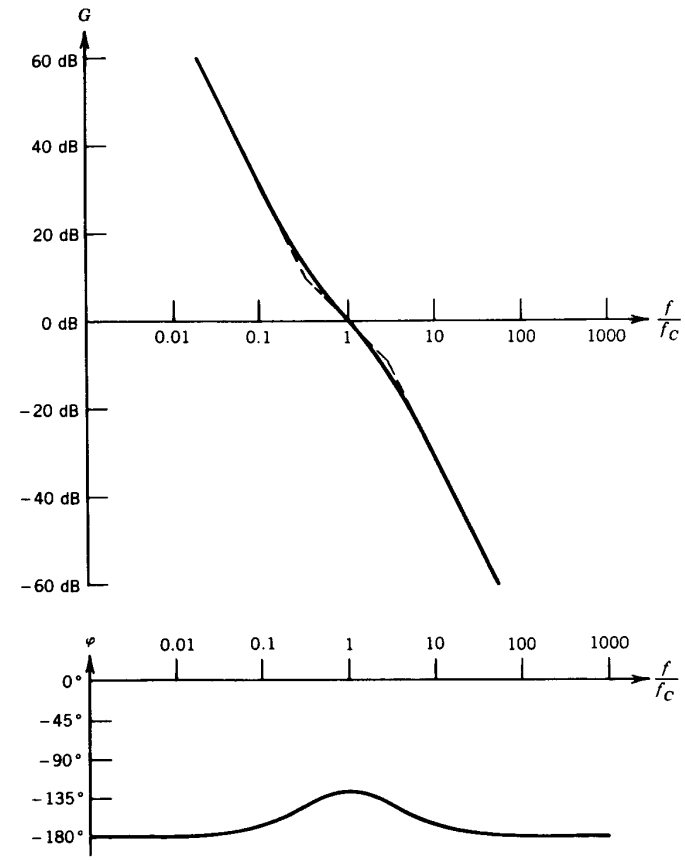

FIGURE 7.6 Bode plots of AF_N of Equation 7.76 with $w = 3$: $G \equiv 20\,\text{dB}\,\log_{10}|AF_N|$ and $\varphi \equiv \underline{/AF_N}$.

7.6.2 Three Lag Networks

The transfer function of Equation 7.6 consists of three lag network responses. In the limiting case when one of the corner frequencies is much lower than the other two, the transfer function of Equation 7.6 can be written

$$AF_N = \frac{A_{dc}F_{N,dc}}{(jf/f_0)(1 + jf/f_1)(1 + jf/f_2)}. \tag{7.79a}$$

Note that corner frequency f_0 was introduced instead of f_3 of Equation 7.6 to emphasize that in Equation 7.79a

$$f_0 \ll f_1 \tag{7.79b}$$

and

$$f_0 \ll f_2. \tag{7.79c}$$

The phase of Equation 7.79a can be written

$$\varphi = \underline{/AF_N} = -90° - \arctan\left(\frac{f}{f_1}\right) - \arctan\left(\frac{f}{f_2}\right). \tag{7.80}$$

To find the frequency where $|AF_N| = 1$, the phase given by Equation 7.80 is substituted into Equation 7.55, resulting in

$$-90° - \arctan\left(\frac{f}{f_1}\right) - \arctan\left(\frac{f}{f_2}\right) \geqslant -180° + \varphi_M. \tag{7.81}$$

It can be shown (see Problem 7.35) that, for $0 \leqslant \varphi_M < 90°$ and $f > 0$, f can be expressed from Equation 7.81 as

$$f \leqslant -\frac{f_1 + f_2}{2}\tan\varphi_M + \sqrt{\left(\frac{f_1 + f_2}{2}\tan\varphi_M\right)^2 + f_1 f_2}. \tag{7.82}$$

Also, by equating $|AF_N| = 1$, it follows from Equation 7.79a that

$$A_{dc}F_{N,dc} \leqslant (A_{dc}F_{N,dc})_{max} = \frac{f}{f_0}\sqrt{1 + \left(\frac{f}{f_1}\right)^2}\sqrt{1 + \left(\frac{f}{f_2}\right)^2}, \tag{7.83a}$$

where

$$f = -\frac{f_1 + f_2}{2}\tan\varphi_M + \sqrt{\left(\frac{f_1 + f_2}{2}\tan\varphi_M\right)^2 + f_1 f_2}. \tag{7.83b}$$

EXAMPLE 7.15. A Type 2539 wideband monolithic operational amplifier is characterized by $A_{dc} = 30{,}000$, $f_0 = 20\,\text{kHz}$, and $f_1 = f_2 = 300\,\text{MHz}$. The phase margin is specified as $\varphi_M = 45°$. Thus, Equation 7.83b becomes

$$f = -\frac{300\,\text{MHz} + 300\,\text{MHz}}{2}\tan 45° + \sqrt{\left(\frac{300\,\text{MHz} + 300\,\text{MHz}}{2}\tan 45°\right)^2 + (300\,\text{MHz})(300\,\text{MHz})}$$
$$= 124\,\text{MHz},$$

and Equation 7.83a becomes

$$(A_{dc}F_{N,dc})_{max} = \frac{124\,\text{MHz}}{0.02\,\text{MHz}}\sqrt{1 + \left(\frac{124\,\text{MHz}}{300\,\text{MHz}}\right)^2}\sqrt{1 + \left(\frac{124\,\text{MHz}}{300\,\text{MHz}}\right)^2} = 7259.$$

Hence,

$$(M_{N,dc})_{min} \cong \frac{1}{(F_{N,dc})_{max}} = \frac{A_{dc}}{7259} = \frac{30{,}000}{7259} = 4.1.$$

Phase margins of transfer functions consisting of three lag network responses may be improved by lead–lag compensation, as was also the case for transfer functions consisting of two lag network responses. If f_L is chosen to equal f_2 in Equation 7.79a, the resulting feedback factor becomes

$$AF_N = \frac{A_{dc}F_{N,dc}}{(jf/f_0)(1 + jf/f_1)(1 + jf/f_U)}, \tag{7.84}$$

and Equations 7.83 are applicable with f_U substituted for f_2. However, lead–lag compensation relocates only one corner frequency and its effects are limited for transfer functions with three lag network responses—especially at low values of $M_{N,dc}$.

EXAMPLE 7.16. A Type 2539 wideband monolithic operational amplifier is characterized by $A_{dc} = 30{,}000$, $f_0 = 20\,\text{kHz}$, and $f_1 = f_2 = 300\,\text{MHz}$. The phase margin is specified as $\varphi_M = 45°$. Lead–lag compensation is introduced with $C_I = 1.8\,\text{pF}$, $R_F = 150\,\Omega$, and $R_I = 75\,\Omega$. Thus,

$$M_{N,dc} \cong (F_{N,dc})^{-1} = \left(\frac{R_I}{R_I + R_F}\right)^{-1} = \left(\frac{75\,\Omega}{75\,\Omega + 150\,\Omega}\right)^{-1} = 3.$$

The value of capacitance $C_I = 1.8$ pF, and $f_L = f_1 = 300$ MHz. Thus,

$$C_F = \frac{1}{2\pi R_F f_L} = \frac{1}{2\pi(150\,\Omega)(300\text{ MHz})} = 3.5368\text{ pF}$$

and

$$f_U = \frac{1}{2\pi \dfrac{R_F R_I}{R_F + R_I}(C_F + C_I)} = \frac{1}{2\pi \dfrac{(150\,\Omega)(75\,\Omega)}{150\,\Omega + 75\,\Omega}(3.5368\text{ pF} + 1.8\text{ pF})}$$
$$= 596.45\text{ MHz}.$$

Also, by use of Equation 7.83b with f_U substituted for f_2,

$$f = -\frac{300\text{ MHz} + 596.45\text{ MHz}}{2} + \sqrt{\left(\frac{300\text{ MHz} + 596.45\text{ MHz}}{2}\right)^2 + (300\text{ MHz})(596.45\text{ MHz})}$$
$$= 168.09\text{ MHz}.$$

Hence, by use of Equation 7.83a with f_U substituted for f_2,

$$(A_{dc}F_{N,dc})_{max} = \frac{168.09\text{ MHz}}{0.02\text{ MHz}}\sqrt{1 + \left(\frac{168.09\text{ MHz}}{300\text{ MHz}}\right)^2}\sqrt{1 + \left(\frac{168.09\text{ MHz}}{596.45\text{ MHz}}\right)^2}$$
$$= 10009.$$

Thus,

$$(A_{dc})_{max} = \frac{(A_{dc}F_{N,dc})_{max}}{F_{N,dc}} = \frac{10009}{1/3} = 30027.$$

This is greater than the specified $A_{dc} = 30{,}000$; hence, the feedback amplifier satisfies the phase margin requirement of $\varphi_M = 45°$. Note, however, that this phase margin requirement would not be satisfied if A_{dc} were increased by 0.1% to a value of 30,030. Also note that

$$R_F + R_I = 150\,\Omega + 75\,\Omega = 225\,\Omega.$$

As will be seen in Chapter 10, this low value of resistance provides a significant limitation on the output voltage swing of the Type 2539 wideband monolithic operational amplifier.

Resulting bandwidths of feedback amplifiers will be discussed in detail in Chapter 8. It will be seen that an operational amplifier built with a given technology can be optimized to attain a maximum resulting bandwidth for a specified resulting amplification $M_{N,dc}$. For example, the Type 2539 wideband monolithic operational amplifier of the preceding two examples is optimized for resulting amplifications $M_{N,dc}$ in the rough vicinity of 10. However, its design could be changed to permit its use as a voltage follower (see Problem 7.37). Hence, one way out of the limitations on $M_{N,dc}$ in the preceding two examples is to find an operational amplifier that is more suited for operation at a low value of $M_{N,dc}$—such as the operational amplifier of Problem 7.37. However, if such an operational amplifier is not readily available, there remain two other approaches for the improvement of phase margins for low values of $M_{N,dc}$.

Consider the use of the voltage divider network of Figure 6.7 (page 66) as a feedback network. However, unlike in a lead–lag compensation, an $f_1 > f_2$ is chosen in Equation 6.19a. Thus,

$$F_N = F_{N,dc}\frac{1 + jf/f_U}{1 + jf/f_L}, \tag{7.85a}$$

where

$$F_{N,dc} = \frac{R_I}{R_F + R_I}, \tag{7.85b}$$

$$f_U = \frac{1}{2\pi R_F C_F}, \tag{7.85c}$$

and

$$f_L = \frac{1}{2\pi \dfrac{R_F R_I}{R_F + R_I}(C_F + C_I)}. \tag{7.85d}$$

Note that subscripts L and U are interchanged from those of Equation 7.43a describing lead–lag compensation, because here the corner frequency in the numerator is higher than the corner frequency in the denominator. For this reason, this compensation is called *lag–lead compensation* (other names are also in use). Also, Equations 7.85b–d do not limit the ratio $f_U/f_L > 1$ because f_L can be decreased by increasing C_I in Equation 7.85d without altering f_U in Equation 7.85c.

Frequency response characteristics of Equations 7.85a–d can be illustrated for $f_U/f_L = 100$ using the Bode plots of Figure 6.2 with f_L substituted for f_1, f_U substituted for f_2, and 20 dB $\log_{10}(F_{N,dc})$ added to the labels of the vertical axis. At frequencies of $f \gg f_U$, feedback factor $F_N = F_{N,dc}f_L/f_U = F_{N,dc}/(f_U/f_L)$; hence, F_N is reduced from its dc value by a factor of $f_U/f_L > 1$. Also, in this frequency range, the phase of F_N approaches zero; hence, it does not alter the phase of the operational amplifier.

Consider the case when f_U is much lower than the frequency where $\angle A = -180° + \varphi_M$. In this case, for the purpose of phase margins, $F_{N,dc}$ is replaced by the lesser $F_{N,dc}/(f_U/f_L)$, because $F_N \cong F_{N,dc}/(f_U/f_L)$ and $\angle AF_N \cong \angle A$ at the frequency where $\angle A = -180° + \varphi_M$. Therefore, $F_{N,dc}$ can be chosen greater, and $M_{N,dc}$ can be chosen smaller, than would be the case without the factor $f_U/f_L > 1$.

EXAMPLE 7.17. A Type 2539 wideband monolithic operational amplifier is characterized by $A_{dc} = 30{,}000$, $f_0 = 20$ kHz, and $f_1 = f_2 = 300$ MHz and is to be used as a feedback amplifier with $M_{N,dc} \cong 1$. The feedback network described by Equation 7.85a is used with $F_{N,dc} = 1$, $f_U = 20$ MHz, and $f_L = 2$ MHz. Thus, the feedback factor can be approximated for frequencies of $f \gg f_0 = 20$ kHz as

$$AF_N = \frac{A_{dc}F_{N,dc}(1 + jf/f_U)}{(jf/f_0)(1 + jf/f_1)^2(1 + jf/f_L)}$$

$$= \frac{(30{,}000)(1)(1 + jf/20\text{ MHz})}{(jf/20\text{ kHz})(1 + jf/300\text{ MHz})^2(1 + jf/2\text{ MHz})}.$$

Bode plots of the exact AF_N are shown in Figure 7.7. Note that $|AF_N| = 1$ at a frequency of approximately 60 MHz, and $f_U = 20$ MHz is less than this only by a factor of 3. However, the resulting phase margin is a reasonable $\varphi_M = 51°$.

The feedback network is realized by that of Figure 7.4 with R_I an open circuit and with an arbitrary choice of $R_F = 1$ kΩ. Thus, from Equation 7.85c,

$$C_F = \frac{1}{2\pi R_F f_U} = \frac{1}{2\pi(1\text{ k}\Omega)(20\text{ MHz})} \cong 8\text{ pF}.$$

Also, for $R_I \to \infty$, Equation 7.85d becomes

$$f_L = \frac{1}{2\pi R_F(C_F + C_I)};$$

hence,

$$C_I = \frac{1}{2\pi R_F f_L} - C_F = \frac{1}{2\pi(1\text{ k}\Omega)(2\text{ MHz})} - 8\text{ pF} \cong 72\text{ pF}.$$

The resulting feedback amplifier provides a resulting dc amplification of $M_{N,dc} = 1/F_{N,dc} = 1$. However, M_N becomes different from 1 at frequencies greater than or equal to $f_L = 2$ MHz. For this reason, the circuit is frequently not called a voltage follower, but only a unity-gain feedback amplifier.

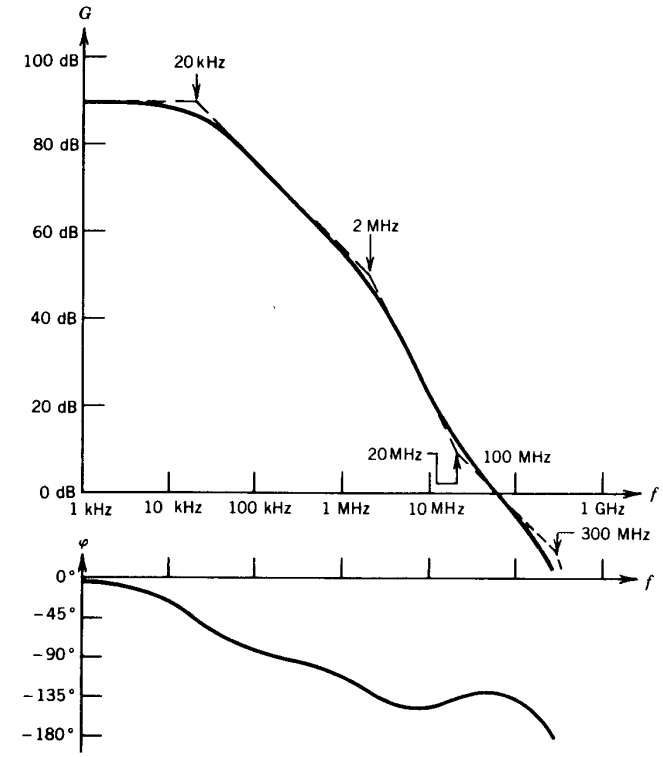

FIGURE 7.7 Bode plots $F \equiv 20$ dB $\log_{10}|AF_N|$ and $\varphi \equiv \angle AF_N$ in Example 7.17.

A disadvantage of lag–lead compensation is that the resulting amplification starts changing from its dc value at frequency f_L, which is very low compared to the corner frequencies of the operational amplifier: $f_L = 2$ MHz as compared to $f_1 = 300$ MHz in Example 7.17. This limitation will be discussed further in Chapter 8.

Still another approach for obtaining low values of resulting amplifications M_N is to attenuate the signal by a resistive attenuator, while building the feedback amplifier with a higher M_N than required. Crude as this may seem, it has some advantages in inverting feedback amplifiers discussed in Sections 7.7 and 8.5.

7.7 Inverting Feedback Amplifiers

Thus far, the discussions of stability and phase margins have been based on a noninverting feedback amplifier, as in Figure 7.4. An inverting feedback amplifier is shown in Figure 7.8.

Figures 7.4 and 7.8 differ in the location of voltage source V_{in}. Therefore, the two circuits become identical when $V_{in} = 0$. Since stability and phase margin considerations have been independent of magnitudes of input voltages, it would seem that they would be equally valid for both Figures 7.4 and 7.8. This is completely correct in principle; however, a practical difference arises from the effects of nonzero source impedances of voltage sources V_{in}.

The stability and phase margins in the noninverting feedback amplifier of Figure 7.4 are quite insensitive to any impedance in series with voltage source V_{in}. In contrast, it was seen that stability and phase margins can critically depend on resistance R_I, therefore also on any impedance in series with voltage source V_{in} in Figure 7.8.

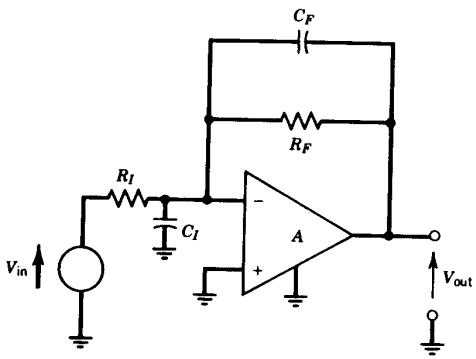

FIGURE 7.8 An inverting feedback amplifier.

The situation is especially critical when V_{in} in Figure 7.8 is at a remote location and is connected through a transmission line. When the termination at the sending end of the transmission line is not close to its characteristic impedance at all frequencies, the impedance presented by the transmission line at the receiving end—that is, at the inverting feedback amplifier—is dependent on its length and on frequency; hence, it cannot be relied on. In such cases, stability and phase margins have to hold up even when a large impedance appears in series with voltage source V_{in} in Figure 7.8. This leads to the circuit of Figure 7.9, where stability and phase margins can be assured by a suitable choice of R_1, R_2, and R_3. In practice, these resistors are chosen such that stability and phase margin requirements are satisfied for any resistive source impedance R_{source}.

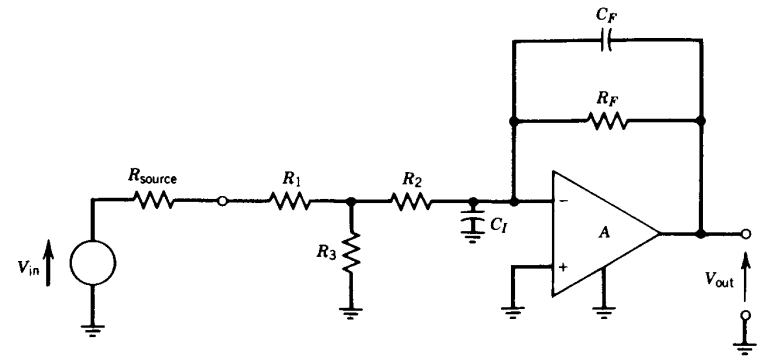

FIGURE 7.9 An inverting feedback amplifier that is suitable for operation with any R_{source}.

EXAMPLE 7.18. A Type 2539 wideband monolithic operational amplifier is characterized by $A_{dc} = 30{,}000$, $f_0 = 20$ kHz, and $f_1 = f_2 = 300$ MHz. It is used as an inverting feedback amplifier in the circuit of Figure 7.9 with $C_I = 1.8$ pF, $C_F = 3.5368$ pF, $R_F = 150\,\Omega$, and $R_2 + R_3 = 75\,\Omega$. Thus, when $R_{source} = \infty$ in Figure 7.9, the circuit becomes identical to that of Example 7.16; hence, it satisfies a phase margin requirement of $\varphi_M = 45°$.

When $R_{source} \neq \infty$, it lowers the value of R_I below $R_2 + R_3 = 75\,\Omega$. This leaves the value of f_L unchanged. However, it increases f_U, thereby increasing the phase margin. Also, it lowers $F_{N,dc}$, thus increasing $M_{N,dc} \cong 1/F_{N,dc}$ and further increasing the phase margin. Therefore, a phase margin requirement of $\varphi_M = 45°$ is satisfied with any value of R_{source} and R_1.

In addition to stability and phase margin, the choice of resistors R_1, R_2, and R_3 is also governed by other requirements such as the resulting frequency response, transient response, and input impedance of the feedback amplifier. For this reason, further discussion of Figure 7.9 is postponed until Chapter 8.

PROBLEMS

7.1 Show that the Nyquist diagram of Figure 7.2 is a circle that has a radius of $A_{dc}F_{N,dc}/2$ and has its center at $A_{dc}F_{N,dc}/2 + j0$. [*Hint:* Multiply the numerator and the denominator of A in Example 7.1 by $(1 - jf/f_0)$ and show that the resulting denominator is real; then express $\mathrm{Im}(AF_N)$ as a function of $\mathrm{Re}(AF_N)$.]

7.2 Derive Equations 7.8, 7.10, and 7.12.

7.3 An internally compensated operational amplifier can be characterized by an A of the form of Equation 5.15 with $f_1 = 10$ Hz, $f_2 = f_3 = 10$ MHz, and $A_{dc} = 200{,}000$. Show that the operational amplifier is stable without additional compensation when it is used as a voltage follower.

7.4 Derive Equations 7.17 and 7.22.

7.5 An operational amplifier is characterized by an A in the form of Equation 7.23 with $f_1 = 1$ MHz, $f_2 = 4$ MHz, $f_3 = 40$ MHz, $f_4 = 100$ MHz, and $A_{dc} = 4000$. Sketch the Bode plots of AF_N if $A_{dc}F_{N,dc} = 40$. Use the Bode plots and sketch an approximate Nyquist diagram. Is the system stable?

7.6 An operational amplifier includes a frequency-independent time delay and is characterized by an $A = 1000\,e^{-jf/f_D}/(1 + jf/f_1)$. Sketch the Bode plots of AF_N, assuming $F_N = 1$, and $f_D/f_1 = 1$, 100, and 10,000. Discuss stability conditions.

***7.7** Use the methods of Appendix B and show that the fractional error of Equation 7.22 has a magnitude of less than $f_0/f_1 + f_0/f_2$.

***7.8** Derive Equations 7.24 and 7.26.

7.9 Sketch the Bode plots of AF_N of Example 7.5 using piecewise linear approximation.

7.10 Sketch the gain plot of AF_N of Problem 7.9, but without using piecewise linear approximation.

7.11 Demonstrate that the stability considerations derived in this chapter for noninverting feedback amplifiers can be applied to inverting feedback amplifiers if $F_{I,dc}/(1 + F_{I,dc})$ is substituted in place of $F_{N,dc}$. [*Hint:* Express $F_{N,dc}$ and $F_{I,dc}$ by resistors R_F and R_I.]

***7.12** An approximate rule of stability states that a system is stable if the Bode plot of the gain of $|AF_N|$, or of $|AF_I/(1 + F_I)|$, crosses the 0-dB axis with a slope that is not steeper than -40 dB/decade. Show that this rule is exact if AF_N is of the form of Equation 7.6 with $f_1 \ll f_2 \leqslant f_3$. Show that the error resulting from the application of this rule in the maximum allowed $A_{dc}F_{N,dc}$ is -35% if AF_N is in the form of Equation 7.6 with $f_1 = f_2 = f_3$. Show that the rule may break down completely in a case such as the one discussed in Problem 7.6.

7.13 Derive Equations 7.28, 7.30, 7.32, and 7.34.

7.14 Derive Equations 7.40 and 7.41.

7.15 Verify Equations 7.43, 7.45, 7.46, and 7.47.

*Optional problem.

7.16 Sketch into Figure 6.5 the Bode plots of Example 7.7 with $f_1 = f_L = 1$ MHz and $f_U = 61.5$ MHz.

7.17 Repeat Example 7.7 with $C_I = 10$ pF, 50 pF, and 100 pF.

7.18 Repeat Example 7.8 with $C_I = 10$ pF, 50 pF, and 100 pF.

7.19 Show that, for any value of w, at $f = f_C$ the magnitude of AF_N of Equation 7.54 becomes 1 and the phase of AF_N becomes $-90° - 4\arctan(1/w)$. [*Hint:* To find the magnitude of the fraction, divide the magnitude of the numerator by the magnitude of the denominator. To find the phase, use the identity $\arctan x = 90° - \arctan(1/x)$, which is valid for $x \geqslant 0$.]

7.20 Show that the feedback amplifier described by Equation 7.54 is stable if $w > 1 + \sqrt{2} \cong 2.41$. [*Hint:* Set the phase of AF_N to $-180°$, and use the identity $\tan 2x = (2\tan x)/(1 - \tan^2 x)$.]

7.21 Use Figure 7.5 to show that, for $w = 5$, the feedback amplifier described by Equation 7.52 is stable if $A_{dc}F_{N,dc} \leqslant 8.4 f_C^3/f_1^3 w^2$ *and* if $A_{dc}F_{N,dc} \geqslant 0.12 f_C^3/f_1^3 w^2$. [*Hint:* Consider that Figure 7.5 shows Equation 7.52 with the $A_{dc}F_{N,dc}$ of Equation 7.53, and set $|AF_N| = 1$ at the frequencies where the phase is $-180°$.]

7.22 Show that the phase margin in Figure 7.5 is $\varphi_M = 44.76°$.

7.23 Show that the phase margin of the feedback amplifier described by Equation 7.54 is $\varphi_M = 45°$ when $w = 1 + \sqrt{2} + \sqrt{4 + 2\sqrt{2}} = 5.027$. [*Hint:* Use the identities $\tan x = (\sin x)/(\cos x)$, $\tan(x/2) = (\sin x)/(1 + \cos x)$, $1 + \tan^2 x = 1/\cos^2 x$, and express $1/w = \tan(45°/4)$ as a function of $\tan 45° = 1$.]

7.24 Derive Equation 7.56 from Equation 7.5. [*Hint:* Note that for any complex W, X, Y, Z, $\underline{/WX} = \underline{/W} + \underline{/X}$ and $\underline{/Y/Z} = \underline{/Y} - \underline{/Z}$.]

7.25 Derive Equation 7.58 from Equation 7.57. [*Hint:* Use the identities $\tan(x + y) = (\tan x + \tan y)/(1 - \tan x \tan y)$ and $\cot x = \tan(90° - x)$; also, assume at the outset and prove at the end that $f^2 < f_1 f_2$.]

7.26 Verify the results of Example 7.10.

7.27 Sketch the Bode plots for the feedback amplifier of Example 7.10.

7.28 Sketch the Bode plots for the feedback amplifier of Example 7.11. What is the phase margin if $M_{N,dc} = 50$?

7.29 Sketch the Bode plots for the feedback amplifier of Example 7.12. What is the phase margin if $M_{N,dc} = 10$?

7.30 Verify Equations 7.70 and 7.72.

7.31 Show that when the feedback network of Example 7.12 is realized by that of Figure 7.4 with $F_{N,dc} = 0.1$ and $C_I = 10\,\text{pF}$, then $C_F = 10\,\text{pF}$, $R_F \cong 318.3\,\Omega$, and $R_I \cong 35.4\,\Omega$.

7.32 Show that, for any value of w, at $f = f_C$ the magnitude of AF_N of Equation 7.76 becomes 1 and the phase of AF_N becomes $-90° - 2\arctan(1/w)$. [*Hint:* To find the magnitude of the fraction, divide the magnitude of the numerator by the magnitude of the denominator. To find the phase, use the identity $\arctan x = 90° - \arctan(1/x)$, which is valid for $x \geqslant 0$.]

7.33 Derive Equation 7.78 from Equation 7.77b. [*Hint:* Use the identity $\tan(x - y) = (\tan x - \tan y)/(1 + \tan x \tan y)$.]

7.34 Use Figure 7.6 to show that, for $w = 3$, the feedback amplifier described by Equation 7.74 has a phase margin of at least 45° if $A_{dc}F_{N,dc} \leqslant 2.7f_C^2/f_1^2 w$ *and* if $A_{dc}F_{N,dc} \geqslant 0.37f_C^2/f_1^2 w$. [*Hint:* Consider that Figure 7.6 shows Equation 7.74 with the $A_{dc}F_{N,dc}$ of Equation 7.75, and set $|AF_N| = 1$ at the frequencies where the phase is $-180° + \varphi_M = -135°$.]

7.35 Derive Equation 7.82 from Equation 7.81. [*Hint:* Use the identities $\tan(x + y) = (\tan x + \tan y)/(1 - \tan x \tan y)$ and $\cot x = \tan(90° - x)$; also, assume at the outset and prove at the end that $f^2 < f_1 f_2$.]

7.36 Repeat Example 7.15 with $\varphi_M = 30°$, and show that $(M_{N,dc})_{min} \cong 2.6$.

7.37 Refer to the compound lag network described in Example 6.7, and show that with $R_2 = 294\,\Omega$ and $C_2 = 18\,\text{pF}$ the overall amplification of the operational amplifier, including the additional corner frequency of 300 MHz in the footnote to Example 6.6, becomes

$$\frac{30{,}000}{(1 + jf/4.3\,\text{kHz})(1 + jf/300\,\text{MHz})(1 + jf/1380\,\text{MHz})}.$$

Also show that, when used as a voltage follower, the resulting feedback amplifier satisfies

(a) a phase margin requirement of $\varphi_M = 60°$,

(b) a phase margin requirement of $\varphi_M = 45°$, even if A_{dc} is raised from 30,000 to 60,000.

CHAPTER 8

Frequency Response and Transient Response of Feedback Amplifiers

Chapter 7 covered stability conditions and margins of feedback amplifiers. This chapter evaluates the frequency responses and the transient responses of the resulting amplifications, M_N and M_I, as well as input impedances. As in Chapter 7, the discussion here is also based on noninverting feedback amplifiers; inverting feedback amplifiers are discussed in Section 8.5.

8.1 Operational Amplifiers with $A = A_{dc} = \infty$

This simple case of the ideal operational amplifier was introduced in Chapter 3. With amplification $A = \infty$ at all frequencies and at all times, the resulting amplification $M_N = 1/F_N$. This limiting case clearly shows the effects of feedback return F_N on the frequency response and the transient response of the resulting amplification M_N; this relation will be obscured with the introduction of frequency-dependent amplifications A in later sections.

8.1.1 Frequency-Independent Feedback

This is the simplest possibility, described by Equation 3.8, whereby

$$M_N = M_{N,dc} = \frac{1}{F_N} = \frac{1}{F_{N,dc}} \tag{8.1}$$

at all frequencies and at all times. This would be an ideal response for amplification without altering the shape of the input signal. Also, unattainable as it is, the limit of Equation 8.1 provides a useful basis for evaluating properties of practical feedback amplifiers.

8.1.2 Lead–Lag Compensation

In lead–lag compensation,

$$F_N = F_{N,\mathrm{dc}} \frac{1 + \mathrm{j}f/f_L}{1 + \mathrm{j}f/f_U}, \tag{8.2a}$$

where

$$f_L < f_U. \tag{8.2b}$$

Lead–lag compensation can be implemented using Figure 7.4 with $F_{N,\mathrm{dc}}$, f_L, and f_U given by Equations 7.43b–d. When $A = A_{\mathrm{dc}} = \infty$ at all frequencies, the resulting amplification of the feedback amplifier becomes

$$M_N = \frac{1}{F_N} = \frac{1}{F_{N,\mathrm{dc}}} \frac{1 + \mathrm{j}f/f_U}{1 + \mathrm{j}f/f_L} = M_{N,\mathrm{dc}} \frac{1 + \mathrm{j}f/f_U}{1 + \mathrm{j}f/f_L}. \tag{8.3}$$

Equation 8.3 can be illustrated for $f_U/f_L = 100$ using the Bode plots of Figure 6.2 with $f_1 = f_L$, $f_2 = f_U$, and 20 dB $\log_{10} M_{N,\mathrm{dc}}$ added to the labels of the vertical axis G, which now represents the resulting amplification M_N. Thus, M_N starts decreasing from its dc value at a frequency of f_L. Note that f_L is the location of the corner frequency that was cancelled from feedback factor AF_N by the introduction of the lead–lag compensation in Chapter 7. For example, $f_L = 300$ MHz in Example 7.16; thus, the decrease of M_N resulting from the frequency dependence of F_N starts at 300 MHz.

When V_{in} and V_{out} are represented in the time domain, the ratio of their Laplace transforms can be written, by use of Equation 8.3,

$$\frac{\mathscr{L}\{V_{\mathrm{out}}(t)\}}{\mathscr{L}\{V_{\mathrm{in}}(t)\}} = M_{N,\mathrm{dc}} \frac{1 + s\tau_U}{1 + s\tau_L}, \tag{8.4a}$$

where

$$\tau_U = \frac{1}{2\pi f_U} \tag{8.4b}$$

and

$$\tau_L = \frac{1}{2\pi f_L}. \tag{8.4c}$$

Note that $f_U > f_L$; hence, $\tau_U < \tau_L$. Also, when input voltage V_{in} is a step function with magnitude V_0,

$$\mathscr{L}\{V_{\mathrm{in}}(t)\} = \frac{V_0}{s} \tag{8.5}$$

and

$$\mathscr{L}\{V_{\mathrm{out}}(t)\} = \frac{1}{s} \frac{1 + s\tau_U}{1 + s\tau_L} M_{N,\mathrm{dc}} V_0. \tag{8.6}$$

The inverse Laplace transform of Equation 8.6 can be written for times $t > 0$ as

$$V_{\mathrm{out}}(t) = M_{N,\mathrm{dc}} V_0 \left[1 - \left(1 - \frac{\tau_U}{\tau_L} \right) e^{-t/\tau_L} \right]. \tag{8.7}$$

EXAMPLE 8.1. In Equation 8.7, $\tau_L/\tau_U = 10$. Thus, $\tau_U/\tau_L = 0.1$ and Equation 8.7 becomes

$$V_{\mathrm{out}}(t) = M_{N,\mathrm{dc}} V_0 (1 - 0.9\, e^{-t/\tau_L}).$$

A comparison with Example 6.2 shows that V_{out} of this example can be illustrated using Figure 6.3 with τ_L substituted for $(R_1 + R_2)C$ and $M_{N,\mathrm{dc}} V_0$ substituted for V_0. Thus, in this example, an initial jump of $0.1 M_{N,\mathrm{dc}} V_0$ is followed by an exponential rise with a magnitude of $0.9 M_{N,\mathrm{dc}} V_0$ and with a time constant of τ_L, to a final value of $M_{N,\mathrm{dc}} V_0$.

8.1.3 Lag–Lead Compensation

In lag–lead compensation,

$$F_N = F_{N,\mathrm{dc}} \frac{1 + \mathrm{j}f/f_U}{1 + \mathrm{j}f/f_L} \tag{8.8a}$$

with

$$f_L < f_U. \tag{8.8b}$$

Lag–lead compensation can be implemented using Figure 7.4 with $F_{N,\mathrm{dc}}$, f_L, and f_U given by Equations 7.85b–d. When $A = A_{\mathrm{dc}} = \infty$ at all frequencies, the resulting amplification of the feedback amplifier becomes

$$M_N = \frac{1}{F_N} = \frac{1}{F_{N,\mathrm{dc}}} \frac{1 + \mathrm{j}f/f_L}{1 + \mathrm{j}f/f_U} = M_{N,\mathrm{dc}} \frac{1 + \mathrm{j}f/f_L}{1 + \mathrm{j}f/f_U}. \tag{8.9}$$

Equation 8.9 can be illustrated for $f_U/f_L = 100$ using the Bode plots of Figure 6.5 with $f_1 = f_L$, $f_2 = f_U$, and 40 dB + 20 dB $\log_{10} M_{N,\mathrm{dc}}$ added to the labels of the vertical axis G, which now represents the resulting amplification M_N. Thus, M_N starts increasing from its dc value at a frequency of f_L. Note that this corner frequency was a comparatively low $f_L = 2$ MHz in Example 7.17 where, as will be seen later, M_N starts increasing from its dc value at a frequency of 2 MHz.

When V_{in} and V_{out} are represented in the time domain, the ratio of their Laplace transforms can be written, by use of Equation 8.9,

$$\frac{\mathscr{L}\{V_{\mathrm{out}}(t)\}}{\mathscr{L}\{V_{\mathrm{in}}(t)\}} = M_{N,\mathrm{dc}} \frac{1 + s\tau_L}{1 + s\tau_U}, \tag{8.10a}$$

where

$$\tau_L = \frac{1}{2\pi f_L} \tag{8.10b}$$

and

$$\tau_U = \frac{1}{2\pi f_U}. \tag{8.10c}$$

Note that $f_U > f_L$; hence, $\tau_U < \tau_L$. Also, when input voltage V_{in} is a step function with magnitude V_0,

$$\mathscr{L}\{V_{out}(t)\} = \frac{1}{s}\frac{1 + s\tau_L}{1 + s\tau_U} M_{N,dc} V_0. \tag{8.11}$$

The inverse Laplace transform of Equation 8.11 can be written for times $t > 0$ as

$$V_{out}(t) = \left[1 + \left(\frac{\tau_L}{\tau_U} - 1\right) e^{-t/\tau_U}\right] M_{N,dc} V_0. \tag{8.12}$$

EXAMPLE 8.2. In Equation 8.12, $\tau_L/\tau_U = 10$. Thus, Equation 8.12 becomes

$$V_{out}(t) = (1 + 9e^{-t/\tau_U}) M_{N,dc} V_0.$$

A comparison with Example 6.4 shows that V_{out} of this example can be illustrated using Figure 6.6 with t/τ_U as the variable of the horizontal axis and with $10M_{N,dc}V_0$ substituted for V_0. Thus, in this example, an initial jump of $10M_{N,dc}V_0$ is followed by an exponential decay with a magnitude of $9M_{N,dc}V_0$ and with a time constant of τ_U, to a final value of $M_{N,dc}V_0$.

Thus, there is an overshoot in the resulting output voltage with a magnitude that is $(\tau_L/\tau_U - 1)$ times the final value—nine times the final value in Example 8.2 above. This overshoot can be eliminated and the frequency response can be made flat by inserting in the signal path, preceding or following the feedback amplifier, a voltage divider network of Figure 6.8*d* with R_P omitted, $R_S C_S = 1/2\pi f_U$, and $R_S(C_S + C_P) = 1/2\pi f_L$. The use of Equations 6.19a–c with $R_P = \infty$ shows that the frequency response of this network is

$$\left(\frac{V_{out}(f)}{V_{in}(f)}\right)_{network} = \frac{1 + jf/f_U}{1 + jf/f_L}. \tag{8.13}$$

This frequency response multiplies the frequency response of Equation 8.9, resulting in an overall amplification that is a constant $M_N = M_{N,dc}$ at all frequencies and at all times.

8.2 Operational Amplifiers with $A = A_{dc}/(1 + jf/f_1)$

Except for the frequency-independent $A = A_{dc}$ discussed in Section 8.1, this is the simplest representation of the frequency dependence of operational amplifiers. Although too simple to fully characterize realistic operational amplifiers, it can be used to illustrate some basic properties. This is done here for frequency-independent feedback and for lag–lead compensation; however, lead–lag compensation is not included, because it requires more complex representations of A for meaningful results.

8.2.1 Frequency-Independent Feedback

In the case of a noninverting feedback amplifier using an operational amplifier that, in the frequency domain, has an amplification of

$$A = \frac{A_{dc}}{1 + jf/f_1}, \tag{8.14}$$

the resulting amplification, M_N, becomes

$$M_N = \frac{A}{1 + AF_{N,dc}}, \tag{8.15}$$

where feedback return $F_{N,dc}$ is a positive real dimensionless number. Substitution of Equation 8.14 into Equation 8.15 results in an expression for M_N that can be written as

$$M_N = \frac{M_{N,dc}}{1 + jf/[f_1(1 + A_{dc}F_{N,dc})]}, \tag{8.16a}$$

or as

$$M_N = \frac{M_{N,dc}}{1 + jf/(f_1 A_{dc}/M_{N,dc})}, \tag{8.16b}$$

where $M_{N,dc}$ is the resulting amplification of the feedback amplifier at zero frequency,

$$M_{N,dc} \equiv \frac{A_{dc}}{1 + A_{dc}F_{N,dc}}. \tag{8.16c}$$

Equations 8.16a–c are illustrated in Figure 8.1 where Bode plots of magnitudes are plotted for the case of $A_{dc} = 10{,}000$ with $M_{N,dc} = 10{,}000$ (i.e., $F_{N,dc} = 0$), and with $M_{N,dc} = 100$ (i.e., $F_{N,dc} = 0.0099$).

It is seen that the corner frequency B of $|M_N|$ has a value of $B = f_1 A_{dc}/M_{N,dc}$. For frequencies of $f \gg B$, $|M_N| \approx A_{dc}f_1/f$, independent of $F_{N,dc}$ and thus of $M_{N,dc}$. As a result, the gain plot of $|M_N|$ can be approximated by two straight lines: $|M_N| \approx M_{N,dc}$ for $f \ll B$ and $|M_N| \approx A_{dc}f_1/f$ for $f \gg B$. Here B equals the *3-dB bandwidth* (or simply *bandwidth*) of M_N: the frequency at which $|M_N|$ is down by 3 dB from its value at zero frequency.

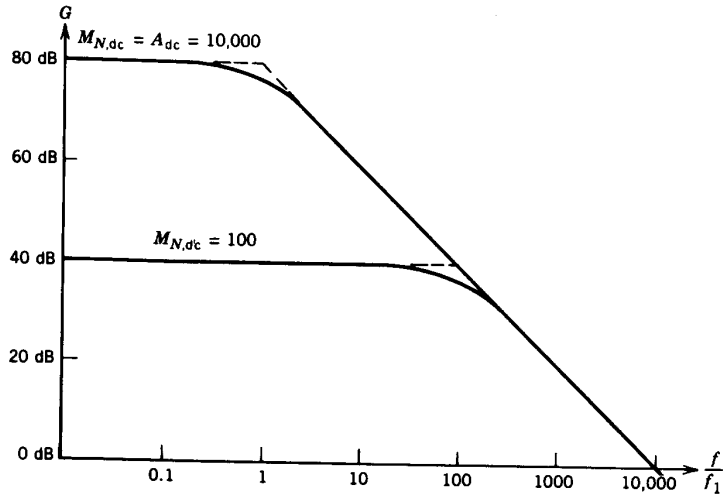

FIGURE 8.1 Bode plots of gain $|M_N|$ of Equations 8.16a–c for A_{dc} = 10,000 with M_{dc} = 10,000 and 100.

EXAMPLE 8.3. An operational amplifier is characterized by an amplification given by Equation 8.14 with $f_1 = 1$ MHz and $A_{dc} = 10{,}000$. It is used as a noninverting feedback amplifier with a resulting amplification at zero frequency of $M_{N,dc} = 200$. The resulting amplification M_N of the feedback amplifier circuit, from Equation 8.16b, is

$$M_N = \frac{M_{N,dc}}{1 + jf/(f_1 A_{dc}/M_{N,dc})} = \frac{200}{1 + jf/[(1\text{ MHz})(10{,}000)/200]}$$
$$= \frac{200}{1 + jf/50\text{ MHz}}.$$

Thus, the 3-dB bandwidth of the feedback amplifier is $B = 50$ MHz.

Equations 8.16 may also be used to approximate M_N for operational amplifiers that have more than one corner frequency. This can be done when only one corner frequency of A is within the resulting bandwidth B, and all other corner frequencies of A are much greater than B.

EXAMPLE 8.4. As a very rough approximation, for frequencies below 1 MHz, the amplification of a Type 741 internally compensated monolithic operational amplifier can be represented by Equation 8.14 with $A_{dc} = 200{,}000$ and $f_1 = 10$ Hz. This approximation ignores an additional corner frequency at 10 MHz, which significantly alters the phase for frequencies above 1 MHz.

When $M_{N,dc} = 10$ then, based on Equation 8.16b, the 3-dB bandwidth of the resulting feedback amplifier is $B = f_1 A_{dc}/M_{N,dc} = (10\text{ Hz})(200{,}000)/10 = 200$ kHz. Since the approximation of A is valid up to 1 MHz, the $B = 200$ kHz approximation is valid.

When $M_{N,dc} = 1$, the 3-dB bandwidth of the resulting feedback amplifier is $B = f_1 A_{dc}/M_{N,dc} = (10\text{ Hz})(200{,}000)/1 = 2$ MHz. Since the approximation of A is valid only up to 1 MHz, the $B = 2$ MHz approximation is inaccurate.

When V_{in} and V_{out} are represented in the time domain, the ratio of their Laplace transforms can be written, based on Equation 8.16b,

$$\frac{\mathscr{L}\{V_{out}(t)\}}{\mathscr{L}\{V_{in}(t)\}} = \frac{M_{N,dc}}{1 + s\tau}, \tag{8.17a}$$

where

$$\tau = \frac{M_{N,dc}}{2\pi f_1 A_{dc}}. \tag{8.17b}$$

When input voltage $V_{in}(t)$ is a step function with magnitude V_0,

$$\mathscr{L}\{V_{out}(t)\} = \frac{1}{s}\frac{M_{N,dc}}{1 + s\tau} V_0. \tag{8.18}$$

The inverse Laplace transform of Equation 8.18 can be written for times $t > 0$ as

$$V_{out}(t) = M_{N,dc} V_0 (1 - e^{-t/\tau}), \tag{8.19}$$

with τ given by Equation 8.17b.

8.2.2 Lag–Lead Compensation

In lag–lead compensation

$$F_N = F_{N,dc}\frac{1 + jf/f_U}{1 + jf/f_L}, \tag{8.20a}$$

hence also

$$\frac{1}{F_N} = \frac{1}{F_{N,dc}}\frac{1 + jf/f_L}{1 + jf/f_U}, \tag{8.20b}$$

where in the above equations

$$f_L < f_U. \tag{8.20c}$$

Figure 8.2 shows piecewise linear approximations for $|1/F_N|$ of Equation 8.20b and for $|A|$ of Equation 8.14 by light lines. A piecewise linear approximation of the resulting $|M_N|$ is shown by the heavy line. Also, note that Figure 8.2 assumes $A_{dc}F_{N,dc} \gg 1$; hence, $M_{N,dc} \cong 1/F_{N,dc}$. Furthermore, note that Figure 8.2 shows equally spaced corner frequencies f_1, f_L, f_U, and f_C: This is only for the purpose of the illustration; in reality, these are rarely spaced evenly.

The piecewise linear approximation of $|M_N|$ in Figure 8.2 is obtained as the lesser of $|A|$ and $|1/F_N|$. The validity of this approximation can be demonstrated as follows.

The expression for M_N is given by Equation 3.6 as

$$M_N = \frac{A}{1 + AF_N} \tag{8.21a}$$

and can also be written as

$$\frac{1}{M_N} = \frac{1}{A} + F_N. \tag{8.21b}$$

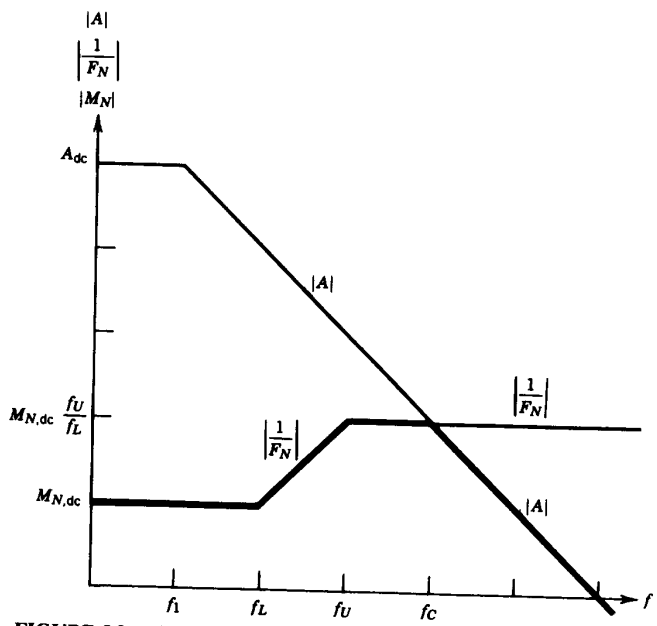

FIGURE 8.2 Piecewise linear approximations of Bode plots for lag–lead compensation. Light lines illustrate $|A|$ from Equation 8.14 and $|1/F_N|$ from Equation 8.20b. The piecewise linear approximation of the resulting $|M_N|$ is shown by the heavy line.

Consider first the case when $|1/A| \gg |F_N|$, that is, when $|A| \ll |1/F_N|$. In this case, the second term on the right side of Equation 8.21b becomes negligibly small. Hence, $|1/M_N| \cong |1/A|$; that is,

$$|M_N| \cong |A|, \tag{8.22a}$$

for

$$|A| \ll \left|\frac{1}{F_N}\right|. \tag{8.22b}$$

In the other extreme, $|1/A| \ll |F_N|$; that is, $|A| \gg |1/F_N|$. In this case, the first term on the right side of Equation 8.21b becomes negligibly small. Hence, $|1/M_N| \cong |F_N|$; that is,

$$|M_N| \cong \left|\frac{1}{F_N}\right|, \tag{8.23a}$$

for

$$\left|\frac{1}{F_N}\right| \ll |A|. \tag{8.23b}$$

Thus, $|M_N|$ can be approximated by $|A|$ or by $|1/F_N|$, whichever is much less than the other.

Special attention is required when $|A|$ is comparable to $|1/F_N|$. This may result in a smooth rounding of the frequency response in the vicinity of the frequency where $|A| = |1/F_N|$—as was the case for $M_{N,dc} = 100$ in Figure 8.1. However, there is another possibility: The imaginary parts of $1/A$ and F_N in Equation 8.21b may cancel each other near the frequency where $|1/A| = |F_N|$, that is, where $|A| = |1/F_N|$. This may result in a minimum in $|1/M_N|$ and hence in a peak in $|M_N|$—as was the case in the frequency responses for $m > 0.5$ in Figure 6.13.

Note that in Figure 8.2, the magnitude of the resulting amplification, $|M_N|$, starts at its dc value, $M_{N,dc}$, and it reaches $M_{N,dc}f_U/f_L$ at a frequency of f_U. It then stays constant up to a frequency of f_C, which is the frequency where $|A| = M_{N,dc}f_U/f_L$. Since $|A| = A_{dc}/(f/f_1)$ for $f \gg f_1$, frequency f_C is given by $M_{N,dc}f_U/f_L = A_{dc}/(f_C/f_1)$; hence,

$$f_C = \frac{A_{dc}f_1f_L}{M_{N,dc}f_U}. \tag{8.24}$$

Also note that the exact expression for M_N is

$$M_N = \frac{A}{1 + AF_N} = \frac{\dfrac{A_{dc}}{1 + jf/f_1}}{1 + \dfrac{A_{dc}}{1 + jf/f_1}F_{N,dc}\dfrac{1 + jf/f_U}{1 + jf/f_L}}$$

$$= \frac{A_{dc}(1 + jf/f_L)}{(1 + jf/f_1)(1 + jf/f_L) + A_{dc}F_{N,dc}(1 + jf/f_U)}. \tag{8.25}$$

As discussed in Chapter 7, lag–lead compensation is used in feedback amplifiers to *reduce* feedback factor AF_N in the vicinity of the frequency where $|AF_N| = 1$ and thus enhance the phase margin. Therefore, to be effective, a lag–lead compensation must have f_L and f_U lower than the frequency where $|AF_N| = 1$.

EXAMPLE 8.5. As a rough approximation, the amplification of a Type 2539 wideband monolithic operational amplifier can be represented as $A = 30{,}000/(1 + jf/20\,\text{kHz})$, which is the same as in Example 7.17 but without the two corner frequencies at 300 MHz. Lag–lead compensation is introduced with $f_U = 20$ MHz, $f_L = 2$ MHz, and $F_{N,dc} = 1$ (same as in Example 7.17).

It can be shown (see Problem 8.10) that the magnitude of the resulting amplification, $|AF_N|$, becomes 1 at a frequency of approximately 60 MHz. Thus, $f_U = 20$ MHz is lower than the frequency where $|AF_N| = 1$ by about a factor of 3.

In general, a low value of f_U is desirable for improving the phase margin. However, as was seen in Section 8.1.3, the resulting amplification M_N starts increasing from its dc value at a frequency of f_L; hence, a high value of f_L is desirable. Thus, there is a conflict in the choice of f_L and f_U when the ratio f_U/f_L is given.

The above suggests that it is useful to consider the value of corner frequency f_U compared to the frequency where $|AF_N| = 1$. However, for simplicity, in what follows here f_U is compared to the frequency f_C where the piecewise linear approximation of $|AF_N| = 1$—and not to the frequency where $|AF_N|$ itself is 1. Thus, f_C is the frequency where the piecewise linear approximations of $|A|$ and $|1/F_N|$ are equal (see Figure 8.2).

EXAMPLE 8.6. The feedback factor AF_N of Example 8.5 can be written

$$AF_N = A_{dc}F_{N,dc}\frac{1 + jf/f_U}{(1 + jf/f_1)(1 + jf/f_L)}$$

$$= (30{,}000)(1)\frac{1 + jf/20\,\text{MHz}}{(1 + jf/20\,\text{kHz})(1 + jf/2\,\text{MHz})}.$$

The piecewise linear approximation of $|AF_N|$ for frequencies $f > f_U$ is obtained by approximating $|AF_N|$ for $f \gg f_U = 20$ MHz as

$$|AF_N| \cong \left|(30{,}000)(1)\frac{jf/20\,\text{MHz}}{(jf/20\,\text{kHz})(jf/2\,\text{MHz})}\right|$$

$$= (30{,}000)(1)\frac{(20\,\text{kHz})(2\,\text{MHz})}{f(20\,\text{MHz})} = \frac{60\,\text{MHz}}{f}.$$

The frequency f_C where this becomes 1 can be found by substituting f_C for f and equating $|AF_N| = 1$:

$$|AF_N| = 1 = \frac{60\,\text{MHz}}{f_C};$$

hence,

$$f_C = 60\,\text{MHz}.$$

Thus, in this example, f_U is less than f_C by exactly a factor of 3.

When A is given by Equation 8.14 and F_N is given by Equation 8.20a, feedback factor AF_N becomes

$$AF_N = A_{dc}F_{N,dc}\frac{1 + jf/f_U}{(1 + jf/f_1)(1 + jf/f_L)}. \tag{8.26}$$

Thus, with $f_1 < f_U$, the piecewise linear approximation of $|AF_N|$ for $f > f_U$ becomes

$$|AF_N| = \left|A_{dc}F_{N,dc}\frac{jf/f_U}{(jf/f_1)(jf/f_L)}\right| = A_{dc}F_{N,dc}\frac{f_1 f_L}{f f_U}. \tag{8.27}$$

The frequency where $|AF_N| = 1$ can be found by substituting f_C for f in Equation 8.27 and equating the result to 1:

$$|AF_N| = 1 = A_{dc}F_{N,dc}\frac{f_1 f_L}{f_C f_U}; \tag{8.28}$$

hence,

$$f_C = A_{dc}F_{N,dc}\frac{f_1 f_L}{f_U}. \tag{8.29}$$

Also, using Equation 8.29, Equation 8.25 can be approximated for $A_{dc}F_{N,dc} \gg 1$ as*

$$M_N = M_{N,dc}\frac{1 + \dfrac{jf}{f_L}}{1 + \dfrac{jf}{f_U}\left(1 + \dfrac{f_L}{f_C}\right) + \dfrac{(jf)^2}{f_C f_U}} \tag{8.30a}$$

provided that

$$A_{dc}F_{N,dc} \gg \frac{f_C}{f_U}\frac{f_U}{f_L}\left(\frac{f_U}{f_L} - 1\right). \tag{8.30b}$$

*The proof of Equations 8.30a and 8.30b is the subject of Problem 8.12.

EXAMPLE 8.7. In Example 8.6, $A_{dc} = 30{,}000$, $F_{N,dc} = 1$, $f_U = 20$ MHz, $f_L = 2$ MHz, and $f_C = 60$ MHz. Thus, Equation 8.30b becomes

$$(30{,}000)(1) = 30{,}000 \gg \frac{60\text{ MHz}}{20\text{ MHz}}\frac{20\text{ MHz}}{2\text{ MHz}}\left(\frac{20\text{ MHz}}{2\text{ MHz}} - 1\right) = 270.$$

Since 30,000 is indeed much greater than 270, Equation 8.30a is applicable:

$$M_N = \frac{1 + \dfrac{jf}{2\text{ MHz}}}{1 + \dfrac{jf}{20\text{ MHz}}\left(1 + \dfrac{2\text{ MHz}}{60\text{ MHz}}\right) + \dfrac{(jf)^2}{(60\text{ MHz})(20\text{ MHz})}}$$

where $M_{N,dc}$ is approximated as $1/F_{N,dc} = 1/1 = 1$ since $A_{dc}F_{N,dc} \gg 1$.

When V_{in} and V_{out} are represented in the time domain then, by use of Equation 8.25, the ratio of their Laplace transforms becomes

$$\frac{\mathscr{L}\{V_{out}(t)\}}{\mathscr{L}\{V_{in}(t)\}} = \frac{A_{dc}\left(1 + \dfrac{s}{2\pi f_L}\right)}{\left(1 + \dfrac{s}{2\pi f_1}\right)\left(1 + \dfrac{s}{2\pi f_L}\right) + A_{dc}F_{N,dc}\left(1 + \dfrac{s}{2\pi f_U}\right)}. \tag{8.31}$$

By use of Equation 8.29, Equation 8.31 can be written*

$$\frac{\mathscr{L}\{V_{out}(t)\}}{\mathscr{L}\{V_{in}(t)\}} = M_{N,dc}\frac{1 + \dfrac{s}{2\pi f_L}}{(1 + s\tau_A)(1 + s\tau_B)}, \tag{8.32a}$$

where

$$M_{N,dc} = \frac{A_{dc}}{1 + A_{dc}F_{N,dc}}, \tag{8.32b}$$

$$\frac{1}{\tau_A} = \frac{b}{2} + \sqrt{\left(\frac{b}{2}\right)^2 - c}, \tag{8.32c}$$

$$\frac{1}{\tau_B} = \frac{b}{2} - \sqrt{\left(\frac{b}{2}\right)^2 - c}, \tag{8.32d}$$

with

$$b = 2\pi f_L + 2\pi f_C\left(1 + \frac{1}{A_{dc}F_{N,dc}}\frac{f_U}{f_L}\right) \tag{8.32e}$$

and

$$c = (2\pi f_U)(2\pi f_C)\left(1 + \frac{1}{A_{dc}F_{N,dc}}\right). \tag{8.32f}$$

*The derivation of Equations 8.32a–f is the subject of Problem 8.14.

Note that $f_U > f_L$ in lag–lead compensation; hence, if $A_{dc}F_{N,dc}f_L/f_U \gg 1$ then also $A_{dc}F_{N,dc} \gg 1$. In such a case, which is quite common, Equations 8.32e and 8.32f become

$$b = 2\pi f_L + 2\pi f_C \tag{8.33a}$$

and

$$c = (2\pi f_U)(2\pi f_C) \tag{8.33b}$$

when

$$A_{dc}F_{N,dc}\frac{f_L}{f_U} \gg 1. \tag{8.33c}$$

τ_A and τ_B of Equations 8.32c and 8.32d are determined by f_L, f_U, and f_C. There are three possibilities for τ_A and τ_B: distinct and real $\tau_A \neq \tau_B$, equal and real $\tau_A = \tau_B$, and complex conjugates τ_A and τ_B. It can be shown (see Problem 8.15) that τ_A and τ_B are distinct and real when

$$\frac{f_U}{f_C} < \left(\frac{f_U}{f_C}\right)_{max}, \tag{8.34a}$$

τ_A and τ_B are equal and real when

$$\frac{f_U}{f_C} = \left(\frac{f_U}{f_C}\right)_{max}, \tag{8.34b}$$

and τ_A and τ_B are complex conjugates when

$$\frac{f_U}{f_C} > \left(\frac{f_U}{f_C}\right)_{max}, \tag{8.34c}$$

where in Equations 8.34a–c

$$\left(\frac{f_U}{f_C}\right)_{max} = \frac{1}{4}\left(1 + \frac{f_L}{f_C}\right)^2 \tag{8.35a}$$

is the maximum permitted value of f_U/f_C if real τ_A and τ_B are desired. It can be shown (see Problem 8.16) that Equation 8.35a can also be written

$$\left(\frac{f_U}{f_C}\right)_{max} = \left(\frac{1 - \sqrt{1 - \dfrac{f_L}{f_U}}}{\dfrac{f_L}{f_U}}\right)^2. \tag{8.35b}$$

Equation 8.35b is plotted in Figure 8.3 for $0 < f_L/f_U < 1$, as is the case for lag–lead compensation. Also, as expected, f_U is less than f_C for this range of f_L/f_U.

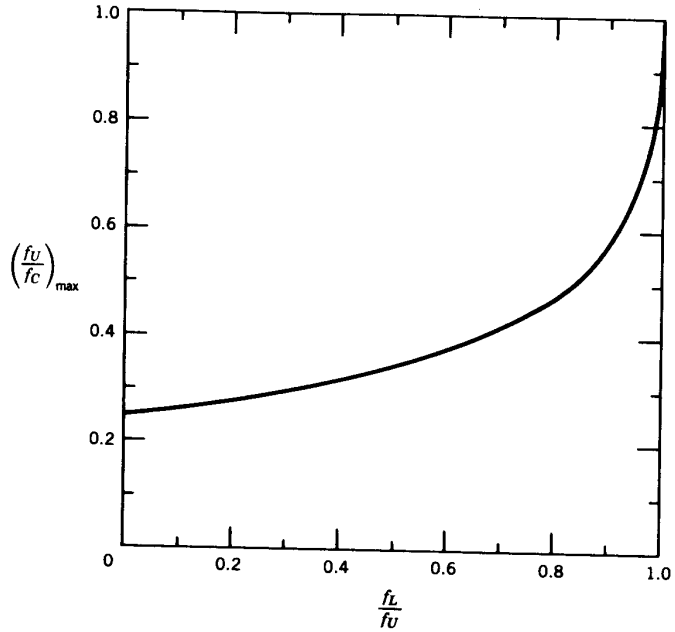

FIGURE 8.3 The maximum value of f_U/f_C for real roots, $(f_U/f_C)_{max}$, as a function of f_L/f_U in lag–lead compensation.

For small values of f_L/f_U, Equation 8.35b can be approximated (see Problems 8.17 and 8.18) as

$$\left(\frac{f_U}{f_C}\right)_{max} \cong \frac{1}{4} + \frac{1}{8}\frac{f_L}{f_U}, \tag{8.36a}$$

for

$$0 < \frac{f_L}{f_U} \ll 1. \tag{8.36b}$$

EXAMPLE 8.8. In Example 8.5 (page 128) the amplification of a Type 2539 wideband monolithic operational amplifier was approximated as $A = A_{dc}/(1 + jf/f_1)$ with $A_{dc} = 30{,}000$ and $f_1 = 20$ kHz. The amplifier is used with $F_{N,dc} = 1$ and with lag–lead compensation with $f_U/f_L = 10$. Thus, according to Equation 8.29,

$$f_C = A_{dc}F_{N,dc}\frac{f_1 f_L}{f_U} = (30{,}000)(1)\frac{0.02\text{ MHz}}{10} = 60\text{ MHz}.$$

By use of Equation 8.35b with $f_L/f_U = 0.1$, $(f_U/f_C)_{max} = 0.2633$; also, the approximate Equation 8.36a yields $(f_U/f_C)_{max} \cong 0.2625$. Therefore, if real roots are desired, f_U must be at most $0.2633f_C = (0.2633)(60\text{ MHz}) = 15.8$ MHz. For example, a choice of $f_L = 1.5$ MHz and $f_U = 15$ MHz would result in real roots. However, the choice of $f_L = 2$ MHz and $f_U = 20$ MHz in Example 8.5 does *not* result in real roots.

The information given by Equation 8.35b and Figure 8.3 can also be presented as shown in Figure 8.4, where $(f_C/f_U)_{min} = 1/(f_U/f_C)_{max}$. Also, $(f_C/f_U)_{min}$ can be approximated as $(f_C/f_U)_{min} \cong 4 - 2f_L/f_U$ when $0 < f_L/f_U \ll 1$ (see Problems 8.20 and 8.21).

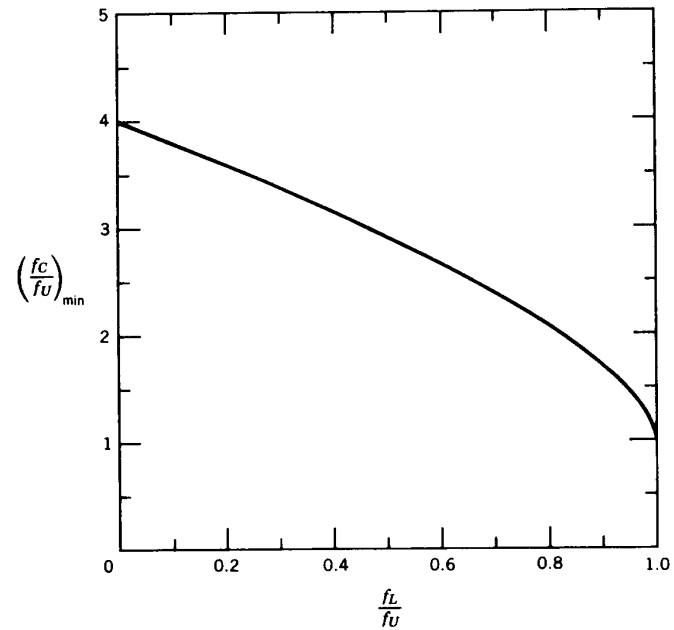

FIGURE 8.4 The minimum value of f_C/f_U for real roots, $(f_C/f_U)_{min}$, as a function of f_L/f_U in lag–lead compensation.

As was also the case in other transients with step-function input voltage, output voltage $V_{out}(t)$ is free of ringing here too when the roots are real. Thus, if a transient with no ringing is desired, f_U/f_C should be at most $(f_U/f_C)_{max}$ given by Equations 8.35a and 8.35b. In what follows here, the transient response is derived for *critical damping*, that is, for the case when $f_U/f_C = (f_U/f_C)_{max}$ as in Equation 8.34b.

In this case, τ_A and τ_B are equal and Equations 8.32a–d become

$$\frac{\mathscr{L}\{V_{out}(t)\}}{\mathscr{L}\{V_{in}(t)\}} = M_{N,dc}\frac{1+\dfrac{s}{2\pi f_L}}{(1+s\tau)^2}, \tag{8.37a}$$

where

$$M_{N,dc} = \frac{A_{dc}}{1+A_{dc}F_{N,dc}} \tag{8.37b}$$

and

$$\tau = \frac{2}{2\pi f_L + 2\pi f_C}. \tag{8.37c}$$

Using Equation 8.35a with $(f_U/f_C)_{max} = f_U/f_C$,

$$\frac{f_U}{f_C} = \frac{1}{4}\left(1+\frac{f_L}{f_C}\right)^2; \tag{8.38a}$$

hence,

$$f_L + f_C = 2\sqrt{f_U f_C}. \tag{8.38b}$$

By use of Equation 8.38b, Equation 8.37c becomes

$$\tau = \sqrt{\frac{f_C}{f_U}}\frac{1}{2\pi f_C}. \tag{8.39}$$

When input voltage V_{in} is a step function with magnitude V_0,

$$\mathscr{L}\{V_{out}(t)\} = M_{N,dc}V_0\frac{1+\dfrac{s}{2\pi f_L}}{s(1+s\tau)^2}, \tag{8.40}$$

where $M_{N,dc}$ and τ are given by Equations 8.37b and 8.39.

From Equation 8.40, $V_{out}(t)$ can be found, by use of Equation 8.39 and Appendix A, as

$$V_{out}(t) = M_{N,dc}V_0\left[1 - e^{-t/\tau} + \left(\frac{f_U}{f_L}\sqrt{\frac{f_C}{f_U}} - 1\right)\frac{t}{\tau}e^{-t/\tau}\right], \tag{8.41}$$

where again $M_{N,dc}$ and τ are given by Equations 8.37b and 8.39.

EXAMPLE 8.9. When $f_U/f_L = 10$ then, by use of Equation 8.35b, $(f_U/f_C)_{max} = 0.2633$. For critical damping, $f_U/f_C = (f_U/f_C)_{max} = 0.2633$, and Equation 8.41 becomes

$$V_{out}(t) = M_{N,dc}V_0\left[1 - e^{-t/\tau} + \left(10\sqrt{\frac{1}{0.2633}} - 1\right)\frac{t}{\tau}e^{-t/\tau}\right]$$
$$= M_{N,dc}V_0\left[1 - e^{-t/\tau} + 18.5\frac{t}{\tau}e^{-t/\tau}\right],$$

where, from Equation 8.39,

$$\tau = \sqrt{\frac{f_C}{f_U}}\frac{1}{2\pi f_C} = \sqrt{\frac{1}{0.2633}}\frac{1}{2\pi f_C} = \frac{1.95}{2\pi f_C}.$$

Figure 8.5 shows output voltage $V_{out}(t)$ as a function of t/τ. It has an initial slope of $19.5M_{N,dc}V_0$ at $t/\tau = 0$, it rises to a peak of about $7.5M_{N,dc}V_0$ at $t/\tau \cong 1.05$, and it settles to $M_{N,dc}V_0$ for long times.

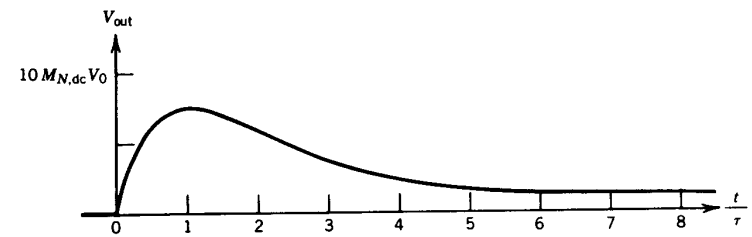

FIGURE 8.5 Transient response of a feedback amplifier using lag–lead compensation with critical damping and with $f_U/f_L = 10$.

Thus, as was the case for an ideal operational amplifier, the transient response has a large overshoot in this case too, as shown by the last term in Equation 8.41. Again, the overshoot can be eliminated by inserting in the signal path a voltage divider network that precedes or follows the feedback amplifier. Also, the situation is similar for distinct real $\tau_A \neq \tau_B$.

8.3 Operational Amplifiers with $A = A_{dc}/[(1 + jf/f_1)(1 + jf/f_2)]$

This form of A provides an accurate representation of many operational amplifier types. In what follows, frequency response and transient response are described with frequency-independent feedback, lead–lag compensation, and lag–lead compensation.

8.3.1 Frequency-Independent Feedback

The discussion of this case starts in the Laplace transform domain; this is followed by descriptions of the frequency response and the transient response.

When V_{in} and V_{out} are represented in the Laplace transform domain,

$$\frac{\mathscr{L}\{V_{out}(t)\}}{\mathscr{L}\{V_{in}(t)\}} = \frac{\dfrac{A_{dc}}{(1+s\tau_1)(1+s\tau_2)}}{1+\dfrac{A_{dc}F_{N,dc}}{(1+s\tau_1)(1+s\tau_2)}}, \tag{8.42}$$

which can also be written

$$\frac{\mathscr{L}\{V_{out}(t)\}}{\mathscr{L}\{V_{in}(t)\}} = \frac{M_{N,dc}}{(1+s\tau_A)(1+s\tau_B)}, \tag{8.43a}$$

where

$$\frac{1}{\tau_A} = \frac{1}{2}\frac{\tau_1+\tau_2}{\tau_1\tau_2}(1-\sqrt{1-4m}), \tag{8.43b}$$

$$\frac{1}{\tau_B} = \frac{1}{2}\frac{\tau_1+\tau_2}{\tau_1\tau_2}(1+\sqrt{1-4m}), \tag{8.43c}$$

with m defined as

$$m \equiv \frac{A_{dc}}{M_{N,dc}}\frac{\tau_1\tau_2}{(\tau_1+\tau_2)^2}, \tag{8.43d}$$

and with

$$M_{N,dc} = \frac{A_{dc}}{1+A_{dc}F_{N,dc}}. \tag{8.43e}$$

The similarity of Equations 8.43a–d here to Equations 6.39a–d describing series RLC circuits in Section 6.5 permits the use of the results given there: Equations 6.39a–d can be used with the substitution of $(\tau_1+\tau_2)/\tau_1\tau_2$ for R/L, and with $RC = (L/R)/m$ from Equation 6.39d. Also, it can be shown that in the frequency domain, with $\tau_1 = 1/2\pi f_1$, $\tau_2 = 1/2\pi f_2$, and $s = j2\pi f$,

$$|M_N| = \frac{M_{N,dc}}{\sqrt{\left[1-\left(\dfrac{f}{f_C}\right)^2\right]^2 + \left(\dfrac{f_1+f_2}{f_C}\dfrac{f}{f_C}\right)^2}}, \tag{8.44a}$$

where f_C is defined as

$$f_C \equiv \sqrt{\frac{A_{dc}}{M_{N,dc}}f_1f_2}. \tag{8.44b}$$

As expected, Equation 8.44a becomes equal to $M_{N,dc}$ for small values of frequency f. Furthermore, it can be shown that Equation 8.44a can be approximated for $f \gg f_C$ as

$$|M_N| \cong M_{N,dc}\left(\frac{f_C}{f}\right)^2 \tag{8.45a}$$

when

$$\frac{f}{f_C} \gg 1. \tag{8.45b}$$

Note that $|M_N|$ of Equation 8.45a becomes equal to $|M_{N,dc}|$ when frequency $f = f_C$.

When $f_2 \gg f_1$, which is the usual case, then also $\tau_1 \gg \tau_2$, and

$$m \cong \frac{A_{dc}}{M_{N,dc}}\frac{f_1}{f_2}, \tag{8.46a}$$

$$f_C \cong f_2\sqrt{m} = \sqrt{\frac{A_{dc}}{M_{N,dc}}f_1f_2}, \tag{8.46b}$$

and

$$|M_N| \cong \frac{M_{N,dc}}{\sqrt{\left[1-\left(\dfrac{f}{f_C}\right)^2\right]^2 + \left(\dfrac{f_2}{f_C}\dfrac{f}{f_C}\right)^2}}. \tag{8.46c}$$

As expected, Equation 8.46c becomes equal to $M_{N,dc}$ for small values of frequency f. Furthermore, Equation 8.46c can be approximated for $f \gg f_C$, with f_C now given by Equation 8.46b,

$$|M_N| \cong M_{N,dc}\left(\frac{f_C}{f}\right)^2 \tag{8.47a}$$

when

$$\frac{f}{f_C} \gg 1. \tag{8.47b}$$

Note that $|M_N|$ of Equation 8.47a becomes equal to $M_{N,dc}$ when frequency $f = f_C$.

EXAMPLE 8.10. A Type 9914A wideband hybrid operational amplifier is characterized by $A_{dc} = 5000$, $f_1 = 0.5$ MHz, and $f_2 = 50$ MHz. Thus, $f_2 \gg f_1$ and Equations 8.46a–c are applicable.

The operational amplifier is used in a noninverting feedback amplifier, and it is desired that the magnitude of the resulting frequency response, $|M_N|$, should have no peaking. Therefore, according to Figure 6.13 and subsequent discussion in Section 6.5, the value of m must be at most 0.5. By use of Equation 8.46a, this constraint leads to

$$M_{N,dc} \geqslant \frac{A_{dc}}{0.5}\frac{f_1}{f_2} = \frac{5000}{0.5}\frac{0.5\text{ MHz}}{50\text{ MHz}} = 100.$$

Thus, the resulting dc amplification, $M_{N,dc}$, must be at least 100 if a frequency response magnitude without peaking is desired.

If $M_{N,dc} = 100$ is chosen, then $m = 0.5$ and, from Equation 8.46b,

$$f_C = f_2\sqrt{m} = (50\text{ MHz})\sqrt{0.5} \cong 35.4\text{ MHz}.$$

The piecewise linear approximation of $|M_N|$ is shown by the heavy graph (*a*) in Figure 8.6. As before, $|M_N|$ is obtained as the lesser of $|A|$ and of $|1/F_N| \cong 100 = 40$ dB. According to Equation 8.47a, for $f \gg f_C = 35.4$ MHz the magnitude $|M_N|$ can be approximated as $100\,(35.4\text{ MHz}/f)^2$. This intersects the $|1/F_N| = 40$ dB line at $f_C = 35.4$ MHz as shown by the broken lines in Figure 8.6.

Details of the frequency response may be found using Figure 6.13 in Section 6.5 with $|M_N|/M_{N,dc}$ substituted for $|G|$. When $f_2 \gg f_1$ then also $\tau_1 \gg \tau_2$, and L/R can be replaced by $\tau_2 = 1/2\pi f_2$ and RC by $1/2\pi f_2 m$. Also, it can be shown that in Figure 6.13

$$\frac{f_C}{f_0} = \frac{1}{\sqrt{m}}, \tag{8.48}$$

where $f_0 = 1/2\pi RC$ and f_C is given by Equation 8.46b.

EXAMPLE 8.11. In Example 8.10, the value of m is 0.5. Thus, by use of Equation 8.48, $f_C/f_0 = 1/\sqrt{0.5} \cong 1.4$ in Figure 6.13. Indeed, for $m = 0.5$, the piecewise linear approximations for $f/f_0 \ll 1$ and $f/f_0 \gg 1$ intersect at $f/f_0 \cong 1.4$ in Figure 6.13.

Therefore, the value of m must be at most 0.5; hence, assuming $f_2 \gg f_1$ and using Equation 8.46a, $M_{N,dc}$ must be at least $A_{dc}f_1/mf_2$ if a frequency response magnitude without peaking is desired. However, lesser values of $M_{N,dc}$ are possible when peaking in the frequency response magnitude is acceptable.

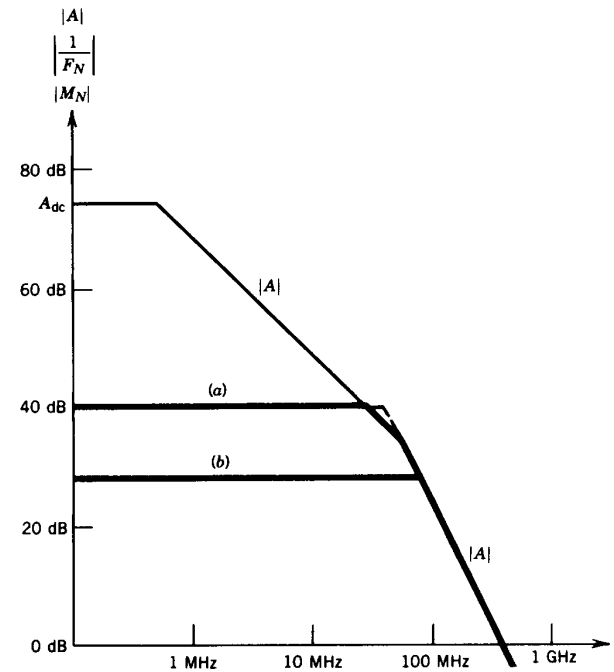

FIGURE 8.6 Piecewise linear approximations of Bode plots for frequency-independent feedbacks. The magnitude $|A|$ is shown by the light line and the magnitudes $|M_N|$ by the heavy lines. (*a*) $|M_N|$ in Example 8.10 and (*b*) $|M_N|$ in Example 8.12.

EXAMPLE 8.12. A Type 9914A wideband hybrid operational amplifier is characterized by $A_{dc} = 5000$, $f_1 = 0.5$ MHz, and $f_2 = 50$ MHz. Thus, $f_2 \gg f_1$ and Equations 8.46a–c are applicable.

The operational amplifier is used in a noninverting feedback amplifier, and an $M_{N,dc} = 25$ is desired. By use of Equation 8.46a,

$$m \cong \frac{A_{dc}}{M_{N,dc}}\frac{f_1}{f_2} = \frac{5000}{25}\frac{0.5\text{ MHz}}{50\text{ MHz}} = 2$$

and, by use of Equation 8.46b,

$$f_C \cong f_2\sqrt{m} = (50\text{ MHz})\sqrt{2} \cong 70.7\text{ MHz}.$$

The piecewise linear approximation of $|M_N|$ is shown by the heavy graph (*b*) in Figure 8.6. As before, $|M_N|$ is obtained as the lesser of $|A|$ and of $|1/F_N| \cong 25 = 28$ dB. According to Equation 8.47a, for $f \gg f_C = 70.7$ MHz the magnitude $|M_N|$ can be approximated as $25(70.7\text{ MHz}/f)^2$. This intersects the $|1/F_N| = 28$ dB line at $f_C = 70.7$ MHz as can be seen in Figure 8.6.

By use of Equation 8.48, $f_C/f_0 = 1/\sqrt{2} \cong 0.7$ in Figure 6.13. Indeed, for $m = 2$, the piecewise linear approximations for $f/f_0 \ll 1$ and $f/f_0 \gg 1$ intersect at $f/f_0 \cong 0.7$ in Figure 6.13. It can also be seen that there is a peaking of about 50% (note logarithmic scale of G).

The characteristics of a feedback amplifier are influenced by variations of operational amplifier parameters A_{dc}, f_1, and f_2. The influence of A_{dc} on the resulting dc amplification $M_{N,dc}$ was discussed in Chapter 4; here $M_{N,dc}$ is approximated as constant.

In the feedback amplifier discussed here, peaking in the frequency response magnitude is governed by m of Equation 8.46a, and the bandwidth is in the vicinity of f_C of Equation 8.46b. An increase in the value of f_2, with all other parameters held constant, reduces m and reduces peaking, and it also increases f_C. Both of these effects are desirable; hence, an increase in f_2 is always beneficial.

An increase in A_{dc} and/or f_1 increases m and increases peaking, and it also increases f_C. The latter effect is desirable; the former is not. The situation is reversed when A_{dc} and/or f_1 decreases. Note that variations of A_{dc} and f_1 have no effect when the product $A_{dc}f_1$ remains constant, as is often the case in integrated circuits (see Problem 8.35).

When input voltage V_{in} is a step function with magnitude V_0 and $f_2 \gg f_1$, Equations 6.40a,b, 6.41a,b and, 6.42a,b of Section 6.5 are applicable with $m = A_{dc}f_1/M_{N,dc}f_2$, $L/R = \tau_2 = 1/2\pi f_2$, $RC = \tau_2/m$, and $M_{N,dc}V_0$ substituted for V_0.

EXAMPLE 8.13. A Type 9914A wideband hybrid operational amplifier is characterized by $A_{dc} = 5000$, $f_1 = 0.5$ MHz, and $f_2 = 50$ MHz. Thus, $f_2 \gg f_1$.

The operational amplifier is used in a noninverting feedback amplifier with $M_{N,dc} = 200$. Therefore,

$$m = \frac{A_{dc}}{M_{N,dc}}\frac{f_1}{f_2} = \frac{5000}{200}\frac{0.5\text{ MHz}}{50\text{ MHz}} = 0.25,$$

$$\frac{L}{R} = \tau_2 = \frac{1}{2\pi f_2} = \frac{1}{2\pi(50\text{ MHz})} \cong 3.18\text{ ns},$$

and

$$RC = \frac{\tau_2}{m} = \frac{3.18\text{ ns}}{0.25} \cong 12.73\text{ ns}.$$

By use of Equation 6.41a with $M_{N,dc}V_0$ substituted for V_0,

$$V_{out}(t) = M_{N,dc}V_0\left[1 - \left(1 + \frac{2t}{RC}\right)e^{-2t/RC}\right],$$

which becomes

$$V_{out}(t) = M_{N,dc}V_0\left[1 - \left(1 + \frac{t}{6.37\text{ ns}}\right)e^{-t/6.37\text{ ns}}\right].$$

This is shown in Figure 8.7. The propagation delay of the 50% point is $t_{50} \cong 11.5$ ns, and the 10%–90% rise time is $t_{10-90} \cong 21.7$ ns.

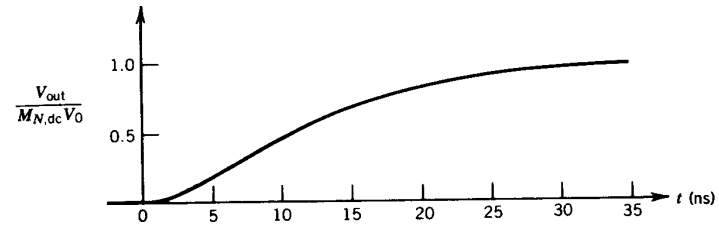

FIGURE 8.7 Transient response of a Type 9914A wideband hybrid operational amplifier with $M_{N,dc} = 200$ in Example 8.13.

Note that $M_{N,dc} = 200$ is the lowest possible resulting dc amplification if a transient without ringing is desired. This is because $M_{N,dc} < 200$ would result in $m > 0.25$ and therefore in transients that include sinusoidal (sine and/or cosine) functions of time (see Equations 6.42a and 6.42b in Section 6.5).

The influence of variations in operational amplifier parameters on the transient response is similar to the case for the frequency response. An increase in the value of f_2, with all other parameters held constant, reduces m and reduces ringing in the transient, and it also increases the speed of the transient. Both of these effects are desirable; hence, an increase in f_2 is always beneficial.

An increase in A_{dc} and/or f_1 increases m and increases ringing, and it also increases the speed of the transient. The latter effect is desirable; the former is not. The situation is reversed when A_{dc} and/or f_1 decreases. Again, variations of A_{dc} and f_1 have no effect when the product $A_{dc}f_1$ remains constant (as in Problem 8.35).

8.3.2 Lead–Lag Compensation

Lead–lag compensation consists of the inclusion of a frequency-dependent feedback network as shown in Figure 7.4 (page 96) and described by Equations 7.43–7.47 in Section 7.4.

When V_{in} and V_{out} are represented in the Laplace transform domain then, with $\tau_1 = 1/2\pi f_1$, $\tau_2 = 1/2\pi f_2$, $\tau_L = 1/2\pi f_L$, and $\tau_U = 1/2\pi f_U$,

$$\frac{\mathscr{L}\{V_{out}(t)\}}{\mathscr{L}\{V_{in}(t)\}} = \frac{\dfrac{A_{dc}}{(1+s\tau_1)(1+s\tau_2)}}{1+\dfrac{A_{dc}F_{N,dc}}{(1+s\tau_1)(1+s\tau_2)}\dfrac{1+s\tau_L}{1+s\tau_U}}, \tag{8.49}$$

where $\tau_L > \tau_U$ hence also $f_L < f_U$.

The value of τ_L is usually in the vicinity of τ_2. The simplest possibility is $\tau_L = \tau_2$; that is, $f_L = f_2$: This case is discussed in Section 8.3.2.1. The case of $f_L > f_2$ (i.e., $\tau_L < \tau_2$) is discussed in Section 8.3.2.2, and the case of $f_L < f_2$ (i.e., $\tau_L > \tau_2$) in Section 8.3.2.3.

8.3.2.1 LEAD–LAG COMPENSATION WITH $f_L = f_2$

In this case (pole-zero cancellation), Equation 8.49 becomes

$$\frac{\mathscr{L}\{V_{out}(t)\}}{\mathscr{L}\{V_{in}(t)\}} = \frac{\dfrac{A_{dc}}{(1+s\tau_1)(1+s\tau_2)}}{1+\dfrac{A_{dc}F_{N,dc}}{(1+s\tau_1)(1+s\tau_U)}}, \tag{8.50}$$

which can also be written

$$\frac{\mathscr{L}\{V_{out}(t)\}}{\mathscr{L}\{V_{in}(t)\}} = \frac{M_{N,dc}}{(1+s\tau_A)(1+s\tau_B)}\frac{1+s\tau_U}{1+s\tau_2}, \tag{8.51a}$$

where

$$\frac{1}{\tau_A} = \frac{1}{2}\frac{\tau_1+\tau_U}{\tau_1\tau_U}(1-\sqrt{1-4m}) \tag{8.51b}$$

and

$$\frac{1}{\tau_B} = \frac{1}{2}\frac{\tau_1+\tau_U}{\tau_1\tau_U}(1+\sqrt{1-4m}), \tag{8.51c}$$

with m defined as

$$m \equiv \frac{A_{dc}}{M_{N,dc}}\frac{\tau_1\tau_U}{(\tau_1+\tau_U)^2} \tag{8.51d}$$

and with

$$M_{N,dc} = \frac{A_{dc}}{1+A_{dc}F_{N,dc}}. \tag{8.51e}$$

When $f_U \gg f_1$, which is the usual case, then also $\tau_U \ll \tau_1$, and

$$\frac{1}{\tau_A} \cong \frac{1}{2\tau_U}(1-\sqrt{1-4m}), \tag{8.52a}$$

$$\frac{1}{\tau_B} \cong \frac{1}{2\tau_U}(1+\sqrt{1-4m}), \tag{8.52b}$$

and

$$m \cong \frac{A_{dc}}{M_{N,dc}}\frac{\tau_U}{\tau_1} = \frac{A_{dc}}{M_{N,dc}}\frac{f_1}{f_U}. \tag{8.52c}$$

In the limiting case of critical damping, $m = 0.25$ and $\tau_A = \tau_B$. In this case, for a $V_{in}(t)$ that is a step function with magnitude V_0, $V_{out}(t)$ becomes (see Problem 8.40)

$$V_{out}(t) = M_{N,dc}V_0\left[1 - \frac{1-\dfrac{\tau_U}{\tau_2}}{\left(1-\dfrac{\tau_A}{\tau_2}\right)^2}e^{-t/\tau_2} + \frac{\left(2-\dfrac{\tau_A}{\tau_2}\right)\dfrac{\tau_A-\tau_U}{\tau_2} + \left(1-\dfrac{\tau_A}{\tau_2}\right)\dfrac{\tau_U}{\tau_2} + \left(1-\dfrac{\tau_A}{\tau_2}\right)\left(1-\dfrac{\tau_U}{\tau_A}\right)\dfrac{t}{\tau_2}}{\left(1-\dfrac{\tau_A}{\tau_2}\right)^2}e^{-t/\tau_A}\right]. \tag{8.53}$$

EXAMPLE 8.14. A Type 9914A wideband hybrid operational amplifier is characterized by $A_{dc} = 5000$, $f_1 = 0.5$ MHz, and $f_2 = 50$ MHz. Thus, $f_2 \gg f_1$.

The operational amplifier is to be used in a noninverting feedback amplifier with $M_{N,dc} = 20$, and a transient response with no ringing is desired. It was seen in the preceding section that for a transient response with no ringing the lowest possible $M_{N,dc}$ is 200 when frequency-independent feedback is used. For this reason, lead–lag compensation is introduced here. An $f_L = f_2$ is used for simplicity and, somewhat arbitrarily, an $m = 0.25$ (critical damping) is chosen. Since $f_U > f_L = f_2 \gg f_1$, Equation 8.52c is applicable; hence,

$$f_U = \frac{A_{dc}}{M_{N,dc}}\frac{f_1}{m} = \frac{5000}{20}\frac{0.5\text{ MHz}}{0.25} = 500\text{ MHz}$$

and

$$\tau_U = \frac{1}{2\pi f_U} = \frac{1}{2\pi(500\text{ MHz})} \cong 0.318\text{ ns}.$$

Also,

$$\tau_2 = \frac{1}{2\pi f_2} = \frac{1}{2\pi(50\text{ MHz})} \cong 3.18\text{ ns}.$$

From Equations 8.52a and 8.52b, with the chosen $m = 0.25$, $\tau_A = \tau_B = 2\tau_U = 2(0.318\text{ ns}) \cong 0.637\text{ ns}$. With these values, Equation 8.53 becomes

$$V_{out}(t) \cong M_{N,dc}V_0\left[1 - 1.4e^{-t/3.18\text{ ns}} + \left(0.4 + \frac{t}{5.09\text{ ns}}\right)e^{-t/0.637\text{ ns}}\right].$$

This is plotted as graph (*a*) in Figure 8.8; the propagation delay of the 50% point is $t_{50} \cong 3.25$ ns, and the 10%–90% rise time is $t_{10-90} \cong 7.5$ ns. It can also be seen in Figure 8.8 that a faster transient response is provided by graph (*b*), which will be discussed later.

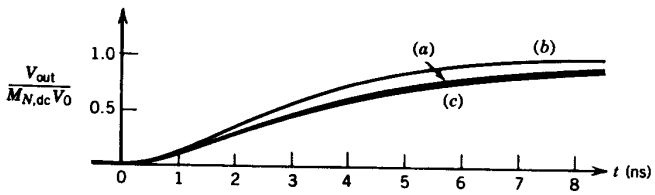

FIGURE 8.8 Transients in a Type 9914A wideband hybrid operational amplifier with $M_{N,dc} = 20$: (*a*) in Example 8.14, (*b*) in Example 8.21, and (*c*) in Example 8.22.

When V_{in} and V_{out} are represented in the frequency domain then, from Equation 8.51a,

$$|M_N| = \frac{M_{N,dc}}{(1 + jf/f_A)(1 + jf/f_B)}\,\frac{1 + jf/f_U}{1 + jf/f_2}, \tag{8.54a}$$

where

$$f_A = \frac{1}{2\pi\tau_A} \tag{8.54b}$$

and

$$f_B = \frac{1}{2\pi\tau_B}. \tag{8.54c}$$

It can be shown (see Problem 8.42) that the resulting bandwidth of the feedback amplifier is approximately $B = f_1A_{dc}/M_{N,dc}$ when $m \leqslant 1$. Also, when $m \geqslant 0.5$, it can be shown (see Problem 8.43) that the resulting bandwidth is in the vicinity of

$$f_C = \sqrt{\frac{A_{dc}}{M_{N,dc}}f_1f_2}, \tag{8.55}$$

which is identical to the rightmost expression of Equation 8.46b.

EXAMPLE 8.15. In Example 8.14, $A_{dc} = 5000$, $M_{N,dc} = 20$, $f_1 = 0.5$ MHz, $f_2 = 50$ MHz, and $m = 0.25$. Thus, the resulting bandwidth of the feedback amplifier is approximately

$$B = \frac{f_1A_{dc}}{M_{N,dc}} = \frac{(0.5\text{ MHz})(5000)}{20} = 125\text{ MHz}.$$

The design of lead–lag compensation also includes determining the values of C_I, C_F, R_F, and R_I, as was done in Section 7.4.

EXAMPLE 8.16. In Example 8.14, $f_L = f_2 = 50$ MHz, $f_U = 500$ MHz, and $F_{N,dc} \cong 1/M_{N,dc} = 1/20 = 0.05$. The value of C_I is 5 pF, which includes the input capacitance of the operational amplifier and stray capacitances. Thus, by use of Equation 7.45,

$$C_F = \frac{C_I}{\dfrac{1}{F_{N,dc}f_U/f_L} - 1} \cong \frac{C_I}{\dfrac{M_{N,dc}}{f_U/f_L} - 1} = \frac{5\text{ pF}}{\dfrac{20}{500\text{ MHz}/50\text{ MHz}} - 1} = 5\text{ pF}.$$

Also,

$$R_F = \frac{1}{2\pi f_LC_F} = \frac{1}{2\pi(50\text{ MHz})(5\text{ pF})} \cong 637\,\Omega$$

and, from $F_{N,dc} = R_I/(R_I + R_F)$,

$$R_I = \frac{R_F}{\dfrac{1}{F_{N,dc}} - 1} \cong \frac{R_F}{M_{N,dc} - 1} = \frac{637\,\Omega}{20 - 1} \cong 33.5\,\Omega.$$

The influence of variations in A_{dc} and f_1 is similar to that described earlier. However, variations in f_2 result in $f_2 < f_L$ or $f_2 > f_L$ and are considered in Sections 8.3.2.2 and 8.3.2.3.

8.3.2.2 LEAD–LAG COMPENSATION WITH $f_L > f_2$

Equation 8.49 is applicable here too; however, its evaluation becomes more involved than for $f_L = f_2$. As a first step, a frequency ratio R is introduced as

$$R = \frac{f_2}{f_L} = \frac{\tau_L}{\tau_2}. \tag{8.56}$$

Note that $R < 1$ when $f_L > f_2$, which is the case here; also, $R = 1$ when $f_L = f_2$.

Next a crossover frequency f_C is introduced as

$$f_C = A_{dc}F_{N,dc}Rf_1. \tag{8.57a}$$

Therefore,

$$\tau_C = \frac{1}{2\pi f_C} = \frac{\tau_1}{A_{dc}F_{N,dc}R}. \tag{8.57b}$$

It can be shown (see Problem 8.46) that f_C is the frequency where the piecewise linear approximation of the Bode plot of $|AF_N|$ becomes 1, provided that $f_2 \leqslant f_C$, $f_L \leqslant f_C$, and $f_U \geqslant f_C$, which conditions will be seen to be valid here.

Also, two more frequency ratios, w_1 and w_2, are introduced as

$$w_1 = \frac{f_C}{f_L} = \frac{\tau_L}{\tau_C} \tag{8.58a}$$

and

$$w_2 = \frac{f_U}{f_C} = \frac{\tau_C}{\tau_U}. \tag{8.58b}$$

Note that $w_1 > 1$ when $f_L < f_C$, and that $w_2 > 1$ when $f_U > f_C$.

With the above, Equation 8.49 can be written

$$\frac{\mathscr{L}\{V_{out}(t)\}}{\mathscr{L}\{V_{in}(t)\}} = \frac{M_{N,dc}(1 + s\tau_U)}{1 + M_{N,dc}F_{N,dc}\frac{1}{r}[(s\tau_C)^3 + p(s\tau_C)^2 + q(s\tau_C)]} \tag{8.59a}$$

where $M_{N,dc} = A_{dc}/(1 + A_{dc}F_{N,dc})$,

$$p = w_2 + \frac{R}{w_1}, \tag{8.59b}$$

$$q = w_2\left(1 + \frac{R}{w_1}\right), \tag{8.59c}$$

and

$$r = \frac{w_2}{w_1}. \tag{8.59d}$$

When $A_{dc}F_{N,dc} \gg 1$, as is the usual case, $M_{N,dc} \cong 1/F_{N,dc}$ and Equation 8.59a becomes

$$\frac{\mathscr{L}\{V_{out}(t)\}}{\mathscr{L}\{V_{in}(t)\}} = \frac{M_{N,dc}r(1 + s\tau_U)}{(s\tau_C)^3 + p(s\tau_C)^2 + q(s\tau_C) + r}, \tag{8.60}$$

with p, q, and r given by Equations 8.59b, 8.59c, and 8.59d.

Equation 8.60 can also be written

$$\frac{\mathscr{L}\{V_{out}(t)\}}{\mathscr{L}\{V_{in}(t)\}} = \frac{M_{N,dc}r(1 + s\tau_U)}{(s\tau_C + \tau_C/\tau_A)(s\tau_C + \tau_C/\tau_B)(s\tau_C + \tau_C/\tau_D)}, \tag{8.61}$$

where τ_A, τ_B, and τ_D remain to be found. Appendix A outlines a procedure for solving the third-order (cubic) equation in the denominator of Equation 8.60, yielding τ_A, τ_B, and τ_D. However, the procedure can become quite lengthy. This is not the case when $R = 0$ which will be discussed later. The procedure also simplifies somewhat when at least two of τ_A, τ_B, and τ_D are equal. This is convenient, because (see Problem 8.48) it marks the transition between two regions: All three of τ_A, τ_B, and τ_D are real in one region, whereas in the other region only one of τ_A, τ_B, and τ_D is real and the remaining two are complex. The importance of this transition is that real τ_A, τ_B, and τ_D imply a transient response that is free of ringing. For this reason, the discussion that follows here examines the case when at least two of τ_A, τ_B, and τ_D are equal. The three are interchangeable in Equation 8.61 and, somewhat arbitrarily, $\tau_D = \tau_A$ is assumed. Thus, Equation 8.61 becomes

$$\frac{\mathscr{L}\{V_{out}(t)\}}{\mathscr{L}\{V_{in}(t)\}} = \frac{M_{N,dc}r(1 + s\tau_U)}{(s\tau_C + \tau_C/\tau_A)^2(s\tau_C + \tau_C/\tau_B)}. \tag{8.62a}$$

Performing squaring and multiplication operations in the denominator of Equation 8.62a results in

$$\frac{\mathscr{L}\{V_{out}(t)\}}{\mathscr{L}\{V_{in}(t)\}} = \frac{M_{N,dc}r(1 + s\tau_U)}{(s\tau_C)^3 + \left(2\frac{\tau_C}{\tau_A} + \frac{\tau_C}{\tau_B}\right)(s\tau_C)^2 + \frac{\tau_C}{\tau_A}\left(\frac{\tau_C}{\tau_A} + 2\frac{\tau_C}{\tau_B}\right)(s\tau_C) + \left(\frac{\tau_C}{\tau_A}\right)^2\frac{\tau_C}{\tau_B}}. \tag{8.62b}$$

The comparison of Equation 8.62b with Equations 8.60, 8.59b, 8.59c, and 8.59d shows that

$$w_2 + \frac{R}{w_1} = 2\frac{\tau_C}{\tau_A} + \frac{\tau_C}{\tau_B}, \tag{8.63a}$$

$$w_2\left(1 + \frac{R}{w_1}\right) = \frac{\tau_C}{\tau_A}\left(\frac{\tau_C}{\tau_A} + 2\frac{\tau_C}{\tau_B}\right), \tag{8.63b}$$

and

$$\frac{w_2}{w_1} = \left(\frac{\tau_C}{\tau_A}\right)^2\frac{\tau_C}{\tau_B}. \tag{8.63c}$$

These three equations can provide τ_C/τ_A, τ_C/τ_B, and w_2 for given R and w_1—at least in principle. In reality, this leads to complications and it is preferable to express w_1 and w_2 as functions of R and τ_C/τ_A (see Problem 8.50) as

$$w_1 = \frac{3-\left(2\frac{\tau_C}{\tau_A}-1\right)R+\sqrt{\left[3-\left(2\frac{\tau_C}{\tau_A}-1\right)R\right]^2-4\frac{\tau_C}{\tau_A}\left(2-\frac{\tau_C}{\tau_A}\right)R\left(2\frac{\tau_A}{\tau_C}-R\right)}}{2\frac{\tau_C}{\tau_A}\left(2-\frac{\tau_C}{\tau_A}\right)} \tag{8.64a}$$

and

$$w_2 = \frac{2\frac{\tau_C}{\tau_A}w_1 - R}{w_1 - \left(\frac{\tau_A}{\tau_C}\right)^2}. \tag{8.64b}$$

Also, from Equation 8.63a,

$$\frac{\tau_C}{\tau_B} = w_2 + \frac{R}{w_1} - 2\frac{\tau_C}{\tau_A}. \tag{8.64c}$$

Varying τ_C/τ_A between 0.5 and 2 results in the relations between w_1 and w_2 shown in Figure 8.9 for $R < 1$. (The $R = 1$ line is obtained from Section 8.3.2.1; results for $R > 1$ will be discussed in Section 8.3.2.3.)

The use of Figure 8.9 requires finding τ_C/τ_A for given R, w_1, and w_2. It can be shown (see Problem 8.52) that

$$\frac{\tau_C}{\tau_A} = \frac{1}{3}\left[\left(w_2+\frac{R}{w_1}\right) \pm \sqrt{\left(w_2+\frac{R}{w_1}\right)^2 - 3\left(1+\frac{R}{w_1}\right)w_2}\right], \tag{8.65}$$

where the plus sign is applicable to the lower (horizontal) branches of the graphs and the minus sign to the upper (vertical) branches.

EXAMPLE 8.17. A Type 9914A wideband hybrid operational amplifier is characterized by $A_{dc} = 5000$, $f_1 = 0.5$ MHz, and $f_2 = 50$ MHz. Thus, $f_2 \gg f_1$.

The operational amplifier is to be used in a noninverting feedback amplifier with $M_{N,dc} = 10$, and a transient response with no ringing is desired. It can be shown (see Problem 8.53) that this cannot be attained using lead–lag compensation with $f_L = f_2$ (pole-zero cancellation). Thus, use of lead–lag compensation with $f_L > f_2$ is considered.

Somewhat arbitrarily, a frequency ratio $R = 0.625$ is assumed. Thus, by use of Equation 8.56,

$$f_L = \frac{f_2}{R} = \frac{50\text{ MHz}}{0.625} = 80\text{ MHz}.$$

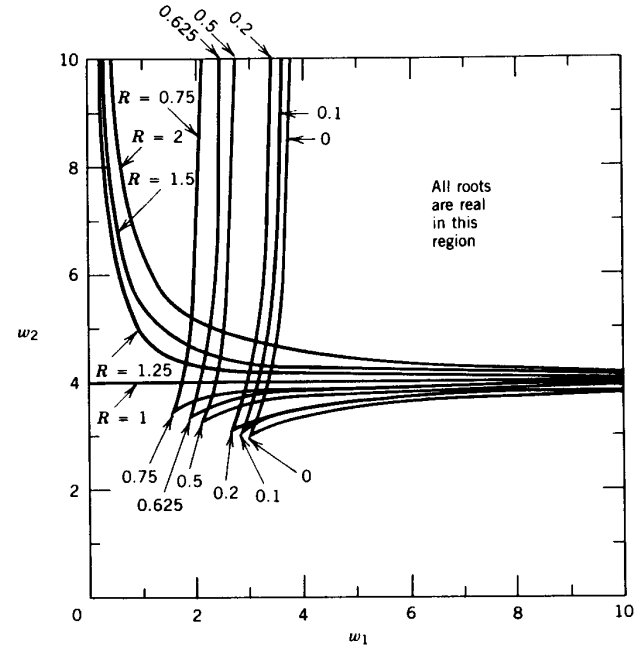

FIGURE 8.9 Roots of the denominator of Equation 8.60 with p, q, and r given by Equations 8.59b, 8.59c, and 8.59d.

Also, from Equation 8.57a,

$$f_C = A_{dc}F_{N,dc}Rf_1 \cong \frac{A_{dc}Rf_1}{M_{N,dc}} = \frac{(5000)(0.625)(0.5\text{ MHz})}{10} = 156.25\text{ MHz}.$$

Furthermore,

$$\tau_C = \frac{1}{2\pi f_C} = \frac{1}{2\pi(156.25\text{ MHz})} \cong 1\text{ ns}$$

and, from Equation 8.58a,

$$w_1 = \frac{f_C}{f_L} = \frac{156.25\text{ MHz}}{80\text{ MHz}} \cong 1.95.$$

According to Figure 8.9, all roots are real for $R = 0.625$ and $w_1 = 1.95$ when w_2 is *between* approximately 3.4 and 3.5. This is a narrow range that would be difficult to guarantee with realistic variations of circuit parameters. However, for the purpose of this example, $w_2 = 3.4$ is used here, which lies *on* the lower branch of the $R = 0.625$ graph. Because of this, Equation 8.62a and the subsequent equations are applicable (otherwise, Equation 8.61 with distinct τ_A, τ_B, and τ_D would have to be used, which would be much more difficult).

With $w_2 = 3.4$, from Equation 8.58b,

$$f_U = w_2 f_C = (3.4)(156.25\text{ MHz}) \cong 531\text{ MHz}$$

and

$$\tau_U = \frac{1}{2\pi f_U} = \frac{1}{2\pi(531\text{ MHz})} \cong 0.3\text{ ns}.$$

Also, from Equation 8.65 with the plus sign,

$$\frac{\tau_C}{\tau_A} = \frac{1}{3}\left[\left(w_2 + \frac{R}{w_1}\right) + \sqrt{\left(w_2 + \frac{R}{w_1}\right)^2 - 3\left(1 + \frac{R}{w_1}\right)w_2}\right]$$

$$= \frac{1}{3}\left[\left(3.4 + \frac{0.625}{1.95}\right) + \sqrt{\left(3.4 + \frac{0.625}{1.95}\right)^2 - 3\left(1 + \frac{0.625}{1.95}\right)3.4}\right] \cong 1.44.$$

Hence,

$$\tau_A = \frac{\tau_C}{1.44} = \frac{1}{2\pi f_C(1.44)} = \frac{1}{2\pi(156.25\text{ MHz})(1.44)} \cong 0.71\text{ ns}.$$

Furthermore, from Equation 8.64c,

$$\tau_B = \frac{\tau_C}{w_2 + \dfrac{R}{w_1} - 2\dfrac{\tau_C}{\tau_A}} = \frac{1\text{ ns}}{3.4 + \dfrac{0.625}{1.95} - 2(1.44)} \cong 1.2\text{ ns}.$$

Figure 8.10 shows the piecewise linear approximation of the Bode plot for $|AF_N|$. The transient response of the circuit is the subject of Example 8.18.

It is now assumed that the value of C_I is 5 pF, which includes the input capacitance of the operational amplifier and stray capacitances. Thus, by use of Equation 7.45,

$$C_F = \frac{C_I}{\dfrac{1}{F_{N,\text{dc}} f_U/f_L} - 1} \cong \frac{C_I}{\dfrac{M_{N,\text{dc}}}{f_U/f_L} - 1} = \frac{5\text{ pF}}{\dfrac{10}{531\text{ MHz}/80\text{ MHz}} - 1} \cong 10\text{ pF}.$$

Also,

$$R_F = \frac{1}{2\pi f_L C_F} = \frac{1}{2\pi(80\text{ MHz})(10\text{ pF})} \cong 200\,\Omega$$

and, from $F_{N,\text{dc}} = R_I/(R_I + R_F)$,

$$R_I = \frac{R_F}{\dfrac{1}{F_{N,\text{dc}}} - 1} \cong \frac{R_F}{M_{N,\text{dc}} - 1} = \frac{200\,\Omega}{10 - 1} \cong 22\,\Omega.$$

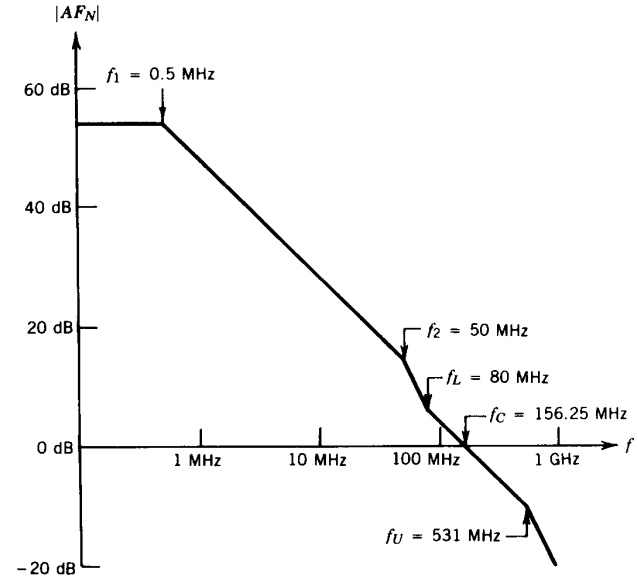

FIGURE 8.10 Piecewise linear approximation of the Bode plot for $|AF_N|$ in Example 8.17.

It can be shown (see Problem 8.54) that Equation 8.62a can also be written

$$\frac{\mathscr{L}\{V_{\text{out}}(t)\}}{\mathscr{L}\{V_{\text{in}}(t)\}} = M_{N,\text{dc}} \frac{1 + s\tau_U}{(1 + s\tau_A)^2(1 + s\tau_B)}. \tag{8.66}$$

When $V_{\text{in}}(t)$ is a step function with magnitude V_0,

$$\mathscr{L}\{V_{\text{out}}(t)\} = \frac{1}{s}\frac{M_{N,\text{dc}}V_0(1 + s\tau_U)}{(1 + s\tau_A)^2(1 + s\tau_B)}. \tag{8.67a}$$

A comparison of Equation 8.66 and Equation 8.51a with $\tau_B = \tau_A$ shows that Equation 8.53 is applicable with τ_B substituted for τ_2; that is,

$$V_{out}(t) = M_{N,dc}V_0\left[1 - \frac{\left(1-\frac{\tau_U}{\tau_B}\right)}{\left(1-\frac{\tau_A}{\tau_B}\right)^2}e^{-t/\tau_B} + \frac{\left(2-\frac{\tau_A}{\tau_B}\right)\frac{\tau_A-\tau_U}{\tau_B} + \left(1-\frac{\tau_A}{\tau_B}\right)\frac{\tau_U}{\tau_B} + \left(1-\frac{\tau_A}{\tau_B}\right)\left(1-\frac{\tau_U}{\tau_A}\right)\frac{t}{\tau_B}}{\left(1-\frac{\tau_A}{\tau_B}\right)^2}e^{-t/\tau_A}\right]. \tag{8.67b}$$

EXAMPLE 8.18. In Example 8.17, $M_{N,dc} = 10$, $\tau_A = 0.71$ ns, $\tau_B = 1.2$ ns, and $\tau_U = 0.3$ ns. With these, Equation 8.67b becomes

$$V_{out}(t) \cong M_{N,dc}V_0\left[1 - 4.5e^{-t/1.2\,\text{ns}} + \left(3.5 + \frac{t}{0.85\,\text{ns}}\right)e^{-t/0.71\,\text{ns}}\right].$$

This is shown by graph (*a*) in Figure 8.11; the propagation delay of the 50% point is $t_{50} \cong 2$ ns and the 10%–90% rise time is $t_{10-90} \cong 3.7$ ns.

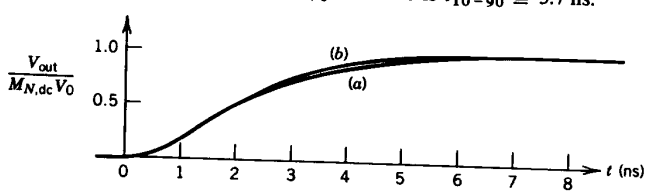

FIGURE 8.11 Transients in a Type 9914A wideband hybrid operational amplifier with $M_{N,dc} = 10$: (*a*) in Example 8.18 and (*b*) in Example 8.20.

The choice of $\tau_D = \tau_A$ in Equation 8.61 resulted in Equation 8.62a. When, in addition, $\tau_B = \tau_A$ in Equation 8.62a, that is, when $\tau_D = \tau_B = \tau_A$ in Equation 8.61, then Equation 8.62a becomes

$$\frac{\mathscr{L}\{V_{out}(t)\}}{\mathscr{L}\{V_{in}(t)\}} = \frac{M_{N,dc}r(1 + s\tau_U)}{(s\tau_C + \tau_C/\tau_A)^3}, \tag{8.68a}$$

which can also be written

$$\frac{\mathscr{L}\{V_{out}(t)\}}{\mathscr{L}\{V_{in}(t)\}} = \frac{M_{N,dc}r(1 + s\tau_U)}{(s\tau_C)^3 + 3\frac{\tau_C}{\tau_A}(s\tau_C)^2 + 3\left(\frac{\tau_C}{\tau_A}\right)^2(s\tau_C) + \left(\frac{\tau_C}{\tau_A}\right)^3}. \tag{8.68b}$$

Comparison of Equation 8.68b with Equations 8.60, 8.59b, 8.59c, and 8.59d shows that

$$w_2 + \frac{R}{w_1} = 3\frac{\tau_C}{\tau_A}, \tag{8.69a}$$

$$w_2\left(1 + \frac{R}{w_1}\right) = 3\left(\frac{\tau_C}{\tau_A}\right)^2, \tag{8.69b}$$

and

$$\frac{w_2}{w_1} = \left(\frac{\tau_C}{\tau_A}\right)^3. \tag{8.69c}$$

Frequency ratios w_2 and w_1 can be expressed as functions of τ_C/τ_A (see Problem 8.59) as

$$w_2 = \frac{1}{2}\left(1 + 3\frac{\tau_C}{\tau_A}\right) + \sqrt{\left[\frac{1}{2}\left(1 + 3\frac{\tau_C}{\tau_A}\right)\right]^2 - 3\left(\frac{\tau_C}{\tau_A}\right)^2} \tag{8.70a}$$

and

$$w_1 = w_2\left(\frac{\tau_A}{\tau_C}\right)^3, \tag{8.70b}$$

and frequency ratio R is given by

$$R = \left(3\frac{\tau_C}{\tau_A} - w_2\right)w_1. \tag{8.70c}$$

Varying τ_C/τ_A between 1 and 2 results in the graphs of w_1, w_2, and τ_C/τ_A as functions of R shown in Figure 8.12. The figure also shows, for later use, R^2/w_1 and Rw_2 as functions of R.

Figure 8.12 represents the special case when all three roots of the denominator of Equation 8.60 are equal. A comparison with Figure 8.9 shows that w_1 and w_2 of Figure 8.12 provide the locations of the *cusps* in Figure 8.9, that is, the points where the upper and the lower branches of a graph meet.

Before proceeding to use Figure 8.12, Equations 8.56, 8.57a, and 8.58a are combined to yield R^2/w_1. By expressing f_L from Equation 8.56 and substituting it into Equation 8.58a, and by substituting f_C of Equation 8.57a into Equation 8.58a,

$$w_1 = \frac{A_{dc}F_{N,dc}Rf_1}{f_2/R}; \tag{8.71a}$$

hence,

$$\frac{R^2}{w_1} = \frac{f_2}{A_{dc}F_{N,dc}f_1}. \tag{8.71b}$$

Note that Equations 8.71a and 8.71b are valid in general and can be used whether f_L is greater than, equal to, or less than f_2.

The use of Figure 8.12 and of Equation 8.71b is illustrated in Example 8.19.

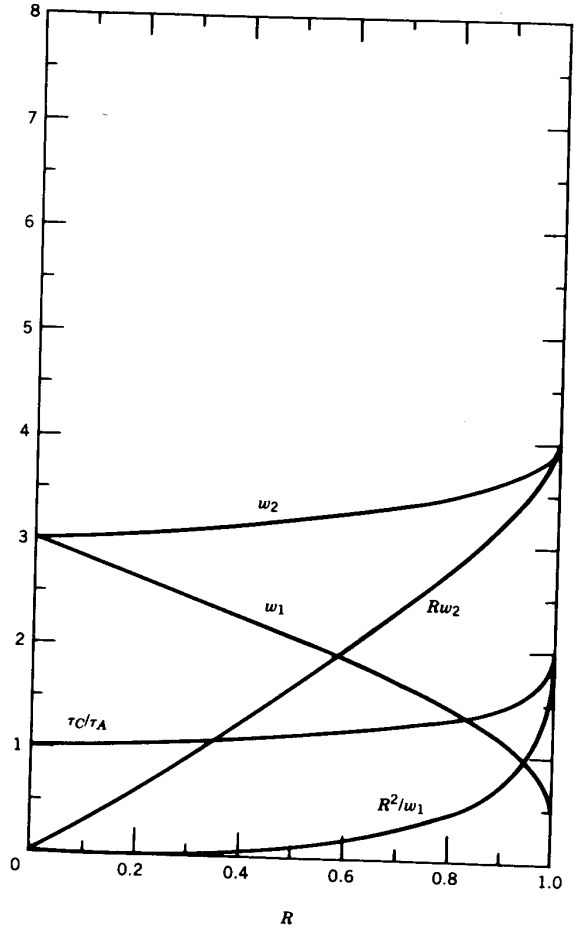

FIGURE 8.12 Solution of the denominator of Equation 8.60 for three equal roots, with p, q, and r given by Equations 8.59b, 8.59c, and 8.59d.

EXAMPLE 8.19. In Examples 8.17 and 8.18, a Type 9914A wideband hybrid operational amplifier was used with $M_{N,dc} = 10$ and with lead–lag compensation using $f_L > f_2$ and $R = 0.625$. This example and Example 8.20 choose R so as to result in a transfer function of the form of Equation 8.68a.

From Equation 8.71b, with $F_{N,dc} \cong 1/M_{N,dc} = 1/10 = 0.1$,

$$\frac{R^2}{w_1} = \frac{f_2}{A_{dc}F_{N,dc}f_1} = \frac{50\text{ MHz}}{(5000)(0.1)(0.5\text{ MHz})} = 0.2.$$

In Figure 8.12, $R^2/w_1 = 0.2$ occurs at $R \cong 0.61$. Also, at $R = 0.61$, $w_1 \cong 1.86$, $w_2 \cong 3.3$, and $\tau_C/\tau_A \cong 1.2$.

Thus, by use of Equation 8.56,

$$f_L = \frac{f_2}{R} = \frac{50\text{ MHz}}{0.61} \cong 82\text{ MHz}.$$

Furthermore, from Equation 8.58a,

$$f_C = w_1 f_L = (1.86)(82\text{ MHz}) \cong 152.5\text{ MHz}$$

and, from Equation 8.58b,

$$f_U = w_2 f_C = (3.3)(152.5\text{ MHz}) \cong 503.2\text{ MHz}.$$

Also,

$$\tau_L = 1/2\pi f_L = 1/[2\pi(82\text{ MHz})] \cong 1.94\text{ ns},$$

$$\tau_C = 1/2\pi f_C = 1/[2\pi(152.5\text{ MHz})] \cong 1.04\text{ ns},$$

$$\tau_A = \tau_C/1.2 = 1.04\text{ ns}/1.2 \cong 0.87\text{ ns},$$

and

$$\tau_U = 1/2\pi f_U = 1/[2\pi(503.2\text{ MHz})] \cong 0.32\text{ ns}.$$

It is now assumed that the value of C_I is 5 pF, which includes the input capacitance of the operational amplifier and stray capacitances. Thus, by use of Equation 7.45,

$$C_F = \frac{C_I}{\dfrac{1}{F_{N,dc}f_U/f_L} - 1} \cong \frac{C_I}{\dfrac{M_{N,dc}}{f_U/f_L} - 1} = \frac{5\text{ pF}}{\dfrac{10}{503.2\text{ MHz}/82\text{ MHz}} - 1} \cong 8\text{ pF}.$$

Also,

$$R_F = \frac{1}{2\pi f_L C_F} = \frac{1}{2\pi(82\text{ MHz})(8\text{ pF})} \cong 243\,\Omega$$

and, from $F_{N,dc} = R_I/(R_I + R_F)$,

$$R_I = \frac{R_F}{\dfrac{1}{F_{N,dc}} - 1} \cong \frac{R_F}{M_{N,dc} - 1} = \frac{243\,\Omega}{10 - 1} = 27\,\Omega.$$

Note that the values of $R_F = 243\,\Omega$ and $R_I = 27\,\Omega$ are by about 20% greater than the $R_F = 200\,\Omega$ and $R_I = 22\,\Omega$ in Example 8.17.

It can be shown (see Problem 8.64) that Equation 8.68a can also be written

$$\frac{\mathscr{L}\{V_{out}(t)\}}{\mathscr{L}\{V_{in}(t)\}} = M_{N,dc}\frac{1 + s\tau_U}{(1 + s\tau_A)^3}. \tag{8.72}$$

When $V_{in}(t)$ is a step function with magnitude V_0,

$$\mathscr{L}\{V_{out}(t)\} = \frac{1}{s}\frac{M_{N,dc}V_0(1 + s\tau_U)}{(1 + s\tau_A)^3}. \tag{8.73a}$$

The inverse Laplace transform of Equation 8.73a can be written (see Problem 8.65)

$$V_{out}(t) = M_{N,dc}V_0\left\{1 - \left[1 + \frac{t}{\tau_A} + \frac{1}{2}\left(1 - \frac{\tau_U}{\tau_A}\right)\left(\frac{t}{\tau_A}\right)^2\right]e^{-t/\tau_A}\right\}. \tag{8.73b}$$

EXAMPLE 8.20. In Example 8.19, $\tau_A = 0.87$ ns and $\tau_U = 0.32$ ns. With these, Equation 8.73b becomes

$$V_{out}(t) = M_{N,dc}V_0\left\{1 - \left[1 + \frac{t}{0.87\text{ ns}} + \left(\frac{t}{1.55\text{ ns}}\right)^2\right]e^{-t/0.87\text{ ns}}\right\}.$$

This is shown by graph (*b*) in Figure 8.11. The propagation delay of the 50% point is $t_{50} \cong 2$ ns. Also, the 10%–90% rise time is $t_{10-90} \cong 3.6$ ns—only slightly less than the $t_{10-90} \cong 3.7$ ns of graph (*a*).

The special case of Equations 8.68a and 8.72 is compared to lead–lag compensation with $f_L = f_2$ (pole-zero cancellation) in Example 8.21.

EXAMPLE 8.21. In Example 8.14, a Type 9914A wideband hybrid operational amplifier was used with $M_{N,dc} = 20$ and with lead–lag compensation using $f_L = f_2$ (pole-zero cancellation). This example uses a transfer function of the form of Equation 8.72.

From Equation 8.71b, with $F_{N,dc} \cong 1/M_{N,dc} = 1/20 = 0.05$,

$$\frac{R^2}{w_1} = \frac{f_2}{A_{dc}F_{N,dc}f_1} = \frac{50\text{ MHz}}{(5000)(0.05)(0.5\text{ MHz})} = 0.4.$$

In Figure 8.12, $R^2/w_1 = 0.4$ occurs at $R \cong 0.77$. Also, at $R = 0.77$, $w_1 \cong 1.52$, $w_2 \cong 3.45$, and $\tau_C/\tau_A \cong 1.32$.

Thus, by use of Equation 8.56,

$$f_L = \frac{f_2}{R} = \frac{50\text{ MHz}}{0.77} \cong 64.9\text{ MHz}.$$

Furthermore, from Equation 8.58a,

$$f_C = w_1 f_L = (1.52)(64.9\text{ MHz}) \cong 98.7\text{ MHz}$$

and, from Equation 8.58b,

$$f_U = w_2 f_C = (3.45)(98.7\text{ MHz}) = 340.5\text{ MHz}.$$

Also, $\tau_L = 1/2\pi f_L \cong 2.45$ ns, $\tau_C = 1/2\pi f_C \cong 1.6$ ns, $\tau_A = \tau_C/1.32 \cong 1.2$ ns, and $\tau_U = 1/2\pi f_U \cong 0.47$ ns. Figure 8.13 shows the piecewise linear approximation of the Bode plot for $|AF_N|$.

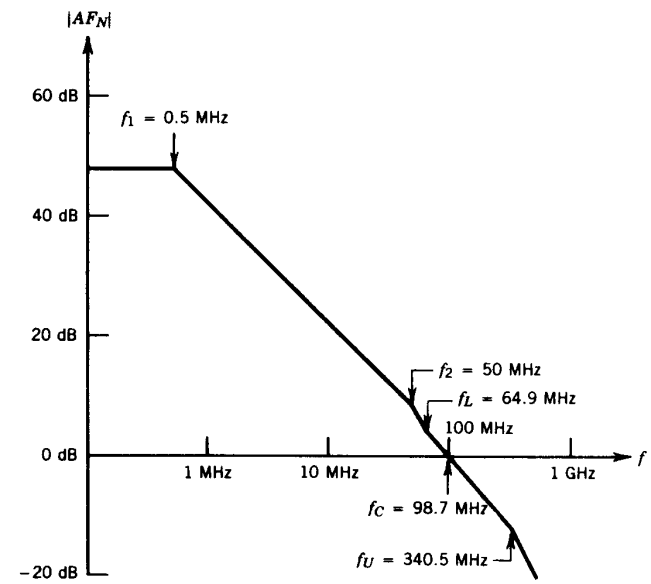

FIGURE 8.13 Piecewise linear approximation of the Bode plot for $|AF_N|$ in Example 8.21.

It is now assumed that the value of C_I is 5 pF, which includes the input capacitance of the operational amplifier and stray capacitances. Thus, by use of Equation 7.45,

$$C_F = \frac{C_I}{\dfrac{1}{F_{N,dc}f_U/f_L} - 1} \cong \frac{C_I}{\dfrac{M_{N,dc}}{f_U/f_L} - 1} = \frac{5\text{ pF}}{\dfrac{20}{340.5\text{ MHz}/64.9\text{ MHz}} - 1} \cong 1.8\text{ pF}.$$

Also,

$$R_F = \frac{1}{2\pi f_L C_F} = \frac{1}{2\pi(64.9\text{ MHz})(1.8\text{ pF})} \cong 1370\,\Omega$$

and, from $F_{N,dc} = R_I/(R_I + R_F)$,

$$R_I = \frac{R_F}{\dfrac{1}{F_{N,dc}} - 1} \cong \frac{R_F}{M_{N,dc} - 1} = \frac{1370\,\Omega}{20 - 1} \cong 72\,\Omega.$$

Note that the values $R_F = 1370\,\Omega$ and $R_I = 72\,\Omega$ obtained here are significantly greater than the values $R_F = 637\,\Omega$ and $R_I = 33.5\,\Omega$ in Examples 8.14, 8.15, and 8.16.

When $V_{in}(t)$ is a step function with magnitude V_0, by use of Equation 8.73b, $V_{out}(t)$ becomes

$$V_{out}(t) = M_{N,dc}V_0\left\{1 - \left[1 + \frac{t}{1.2\text{ ns}} + \left(\frac{t}{2.17\text{ ns}}\right)^2\right]e^{-t/1.2\text{ ns}}\right\}.$$

This is shown by graph (*b*) in Figure 8.8. The propagation delay of the 50% point is $t_{50} \cong 2.7$ ns and the 10%–90% rise time is $t_{10-90} \cong 5$ ns. Note that these are less than the $t_{50} = 3.25$ ns and the $t_{10-90} = 7.5$ ns of graph (*a*) of Example 8.14. Thus, in this case, the use of $f_L > f_2$ led to improvements in t_{50} and t_{10-90}, as well as in $R_F + R_I$.

8.3.2.3 LEAD–LAG COMPENSATION WITH $f_L < f_2$

This region is rarely used intentionally, because the performance of the resulting feedback amplifier is inferior to that attainable with $f_L \geqslant f_2$. However, $f_L < f_2$ may also occur as a result of variations in parameter values. Example 8.22 discusses a feedback amplifier where f_L is intentionally chosen to be less than f_2.

EXAMPLE 8.22. A Type 9914A wideband hybrid operational amplifier is characterized by $A_{dc} = 5000$, $f_1 = 0.5$ MHz, and $f_2 = 50$ MHz. It is used in a noninverting feedback amplifier with $M_{N,dc} = 20$, and a transient response without ringing is desired.

Preceding examples implemented this feedback amplifier using $f_L = f_2 = 50$ MHz and $f_L = 64.9$ MHz. This example implements the feedback amplifier with $f_L = 40$ MHz and with a transfer function of the form of Equation 8.66. Thus, $R = f_2/f_L = 50\text{ MHz}/40\text{ MHz} = 1.25$. Also, from Equation 8.71a,

$$w_1 = \frac{A_{dc}F_{N,dc}R^2 f_1}{f_2} = \frac{(5000)(0.05)(1.25)^2(0.5\text{ MHz})}{50\text{ MHz}} \cong 3.9;$$

hence, by use of Equation 8.58a,

$$f_C = w_1 f_L = (3.9)(40\text{ MHz}) \cong 156\text{ MHz}.$$

At $w_1 = 3.9$, the $R = 1.25$ graph in Figure 8.9 yields $w_2 \cong 4.15$. Thus, by use of Equation 8.58b,

$$f_U = w_2 f_C = (4.15)(156\text{ MHz}) \cong 647\text{ MHz}.$$

Note that this choice of w_2 and f_U results in a transfer function of the form of Equation 8.66. Figure 8.14 shows the piecewise linear approximation of the Bode plot for $|AF_N|$.

From the above, $\tau_2 = 1/2\pi f_2 \cong 3.2$ ns, $\tau_L = 1/2\pi f_L \cong 4$ ns, $\tau_C = 1/2\pi f_C \cong 1$ ns, and $\tau_U = 1/2\pi f_U \cong 0.25$ ns. Also, from Equation 8.65 with the plus sign,

$$\frac{\tau_C}{\tau_A} = \frac{1}{3}\left[\left(w_2 + \frac{R}{w_1}\right) + \sqrt{\left(w_2 + \frac{R}{w_1}\right)^2 - 3\left(1 + \frac{R}{w_1}\right)w_2}\right] \cong 2.1;$$

hence, $\tau_A = \tau_C/2.1 = 1\text{ ns}/2.1 \cong 0.48$ ns. Furthermore, from Equation 8.64c,

$$\frac{\tau_C}{\tau_B} = w_2 + \frac{R}{w_1} - 2\frac{\tau_C}{\tau_A} = 0.27;$$

hence, $\tau_B = \tau_C/0.27 = 1\text{ ns}/0.27 \cong 3.7$ ns.

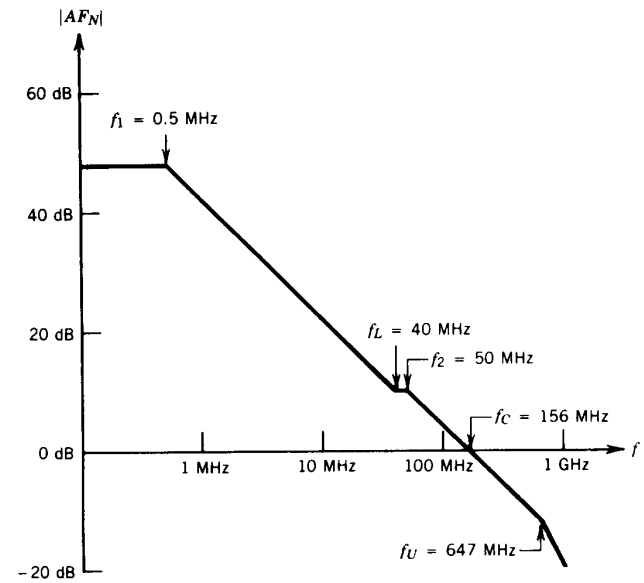

FIGURE 8.14 Piecewise linear approximation of the Bode plot for $|AF_N|$ in Example 8.22.

When input voltage V_{in} is a step function with magnitude V_0, Equation 8.67b is applicable and $V_{out}(t)$ becomes

$$V_{out}(t) \cong 1 - 1.23\,e^{-t/3.7\,\text{ns}} + \left(0.23 + \frac{t}{6.72\,\text{ns}}\right)e^{-t/0.48\,\text{ns}}.$$

This is shown as graph (*c*) in Figure 8.8. It can be seen that it is slightly slower than the transient response with $f_L = f_2 = 50$ MHz shown by graph (*a*). Thus, lowering f_L from 50 MHz to 40 MHz is unfavorable to the transient response.

When C_I is 5 pF then, by use of Equation 7.45,

$$C_F = \frac{C_I}{\dfrac{1}{F_{N,dc}f_U/f_L} - 1} \cong \frac{C_I}{\dfrac{M_{N,dc}}{f_U/f_L} - 1} = \frac{5\,\text{pF}}{\dfrac{20}{647\,\text{MHz}/40\,\text{MHz}} - 1} \cong 21\,\text{pF}.$$

Also,

$$R_F = \frac{1}{2\pi f_L C_F} = \frac{1}{2\pi(40\,\text{MHz})(21\,\text{pF})} \cong 190\,\Omega$$

and, from $F_{N,dc} = R_I/(R_I + R_F)$,

$$R_I = \frac{R_F}{\dfrac{1}{F_{N,dc}} - 1} \cong \frac{R_F}{M_{N,dc} - 1} = \frac{190\,\Omega}{20 - 1} = 10\,\Omega.$$

These values are less than those of Example 8.16 ($R_F = 637\,\Omega$ and $R_I = 33.5\,\Omega$) for graph (*a*) in Figure 8.8; they are also less than those of Example 8.21 ($R_F = 1370\,\Omega$ and $R_I = 72\,\Omega$) for graph (*b*) in Figure 8.8. Thus, the use of $f_L = 40$ MHz is unfavorable for operating speed, as well as for R_F and R_I as compared to the use of $f_L = f_2 = 50$ MHz of Examples 8.14, 8.15, and 8.16 [graph (*a*) in Figure 8.8], as well as compared to the use of $f_L = 64.9$ MHz of Example 8.21 [graph (*b*) in Figure 8.8].

8.3.3 Lag–Lead Compensation

In this case, in the frequency domain,

$$A = \frac{A_{dc}}{(1 + jf/f_1)(1 + jf/f_2)} \tag{8.74a}$$

and

$$F_N = F_{N,dc}\frac{1 + jf/f_U}{1 + jf/f_L}, \tag{8.74b}$$

where

$$f_1 < f_L < f_U < f_2. \tag{8.74c}$$

Figure 8.15 illustrates the magnitude $|A|$, as well as $|1/F_N|$ and the resulting $|M_N|$. Note that Figure 8.15 shows equally spaced corner frequencies f_1, f_L, f_U, f_C, and f_2: This is only for the purpose of the illustration; in reality, these are rarely spaced evenly. However, the sequencing of the corner frequencies given by Equation 8.74c has to be followed.

From Equations 8.74a and 8.74b, feedback factor AF_N can be written

$$AF_N = \frac{A_{dc}F_{N,dc}}{(1 + jf/f_1)(1 + jf/f_2)}\,\frac{1 + jf/f_U}{1 + jf/f_L}. \tag{8.74d}$$

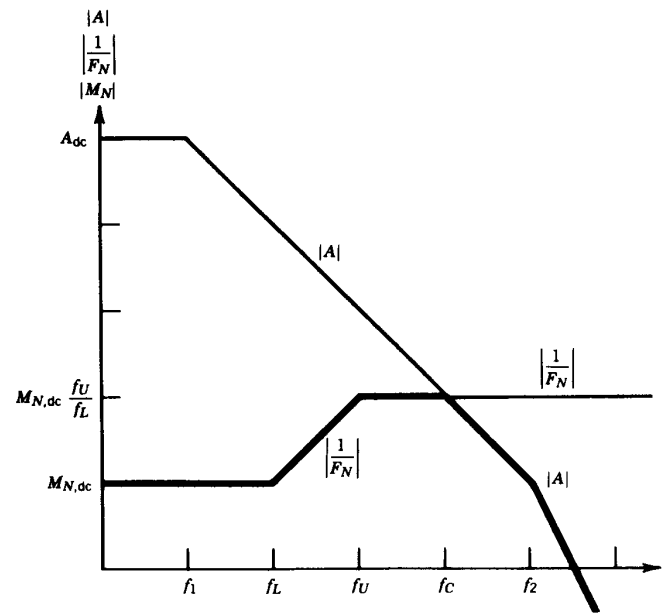

FIGURE 8.15 Piecewise linear approximations of Bode plots for lag–lead compensation. Light lines illustrate $|A|$ from Equation 8.74a and $|1/F_N|$ from Equation 8.74b. The piecewise linear approximation of the resulting $|M_N|$ is shown by the heavy line.

EXAMPLE 8.23. A Type 13741 internally compensated FET-input operational amplifier is characterized by $A_{dc} = 100{,}000$, $f_1 = 10$ Hz, and $f_2 = 1$ MHz. Lag–lead compensation is applied with $F_{N,dc} = 1$ (voltage follower), $f_L = 41.1$ kHz, and $f_U = 129.8$ kHz. (The reason for this choice of f_L and f_U will be seen later.)

With these, feedback factor AF_N becomes

$$AF_N = \frac{100{,}000}{(1 + jf/10\,\text{Hz})(1 + jf/1\,\text{MHz})} \frac{1 + jf/129.8\,\text{kHz}}{1 + jf/41.1\,\text{kHz}}.$$

Figure 8.16 shows the piecewise linear approximation of the Bode plot for $|AF_N|$.

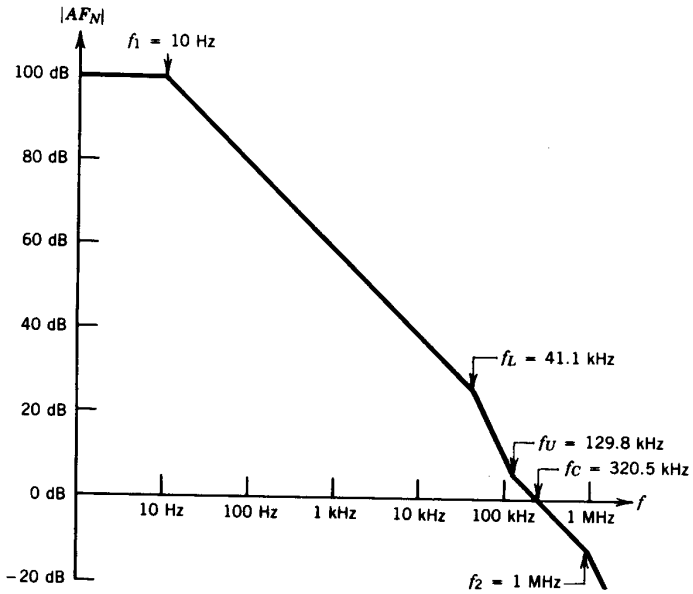

FIGURE 8.16 Piecewise linear approximation of the Bode plot for $|AF_N|$ in Example 8.23.

An inspection of feedback factor AF_N for lag–lead compensation shows that it is identical to that of lead–lag compensation with $f_L > f_2$, but with f_L substituted for f_2, f_U substituted for f_L, and f_2 substituted for f_U.

EXAMPLE 8.24. Figure 8.13 shows the piecewise linear approximation of the Bode plot for $|AF_N|$ for a lead–lag compensation with $f_L > f_2$. A comparison with Figure 8.16 shows that the patterns of the corner frequencies are identical. However, corner frequencies f_2, f_L, and f_U of Figure 8.13 are replaced by f_L, f_U, and f_2, respectively, in Figure 8.16.

In the Laplace transform domain, by use of $M_N = A/(1 + AF_N)$ and of Equations 8.74a and 8.74b with $s = j2\pi f$, $\tau_1 = 1/2\pi f_1$, $\tau_2 = 1/2\pi f_2$, $\tau_U = 1/2\pi f_U$, and $\tau_L = 1/2\pi f_L$,

$$\frac{\mathscr{L}\{V_{out}(t)\}}{\mathscr{L}\{V_{in}(t)\}} = \frac{\dfrac{A_{dc}}{(1 + s\tau_1)(1 + s\tau_2)}}{1 + \dfrac{A_{dc}F_{N,dc}}{(1 + s\tau_1)(1 + s\tau_2)} \dfrac{1 + s\tau_U}{1 + s\tau_L}}. \tag{8.75a}$$

Equation 8.75a can also be written

$$\frac{\mathscr{L}\{V_{out}(t)\}}{\mathscr{L}\{V_{in}(t)\}} = \frac{A_{dc}(1 + s\tau_L)}{(1 + s\tau_1)(1 + s\tau_2)(1 + s\tau_L) + A_{dc}F_{N,dc}(1 + s\tau_U)}. \tag{8.75b}$$

Also, when $A_{dc}F_{N,dc} \gg 1$, which is the usual case, Equation 8.75b becomes

$$\frac{\mathscr{L}\{V_{out}(t)\}}{\mathscr{L}\{V_{in}(t)\}} = M_{N,dc} \frac{1 + s\tau_L}{1 + s\tau_U + \dfrac{M_{N,dc}}{A_{dc}}(1 + s\tau_1)(1 + s\tau_2)(1 + s\tau_L)}. \tag{8.75c}$$

This can also be written

$$\frac{\mathscr{L}\{V_{out}(t)\}}{\mathscr{L}\{V_{in}(t)\}} = M_{N,dc} \frac{1 + s\tau_L}{(1 + s\tau_A)(1 + s\tau_B)(1 + s\tau_D)}, \tag{8.75d}$$

where τ_A, τ_B, and τ_D remain to be found. It can be shown (see Problem 8.72) that τ_A, τ_B, and τ_D are identical with those in Section 8.3.2.2 (lead–lag compensation with $f_L > f_2$), but with τ_2, τ_L, and τ_U replaced by τ_L, τ_U, and τ_2, respectively, and with f_2, f_L, and f_U replaced by f_L, f_U, and f_2, respectively. Note that this replacement does *not* apply to the numerator of Equation 8.75d because it includes τ_L, whereas the corresponding numerator in Section 8.3.2.2 includes τ_U—and *not* τ_2.

EXAMPLE 8.25. A Type 13741 internally compensated FET-input operational amplifier is characterized by $A_{dc} = 100{,}000$, $f_1 = 10$ Hz, and $f_2 = 1$ MHz. Lag–lead compensation is applied with $F_{N,dc} = 1$ (voltage follower), and a transient response without ringing is desired.

By choosing, somewhat arbitrarily, $\tau_A = \tau_B = \tau_D$ in Equation 8.75d, the results of Figure 8.12 can be used. However, in the expression $R = f_2/f_L$ of Equation 8.56, f_2 has to be replaced by f_L and f_L by f_U; thus, R becomes $R = f_L/f_U$. Also, in the expression $w_2 = f_U/f_C$ of Equation 8.58b, f_U has to be replaced by f_2; thus w_2 becomes $w_2 = f_2/f_C$. Equation 8.57a is still applicable because τ_1 is unaltered in Equation 8.75c; hence, f_1 remains unaltered as well—however, now $R = f_L/f_U$.

Combining the above results, the product Rw_2 can be written

$$Rw_2 = \frac{f_L}{f_U}\frac{f_2}{f_C}.$$

Also, Equation 8.57a can now be written

$$f_C = A_{dc}F_{N,dc}Rf_1 = A_{dc}F_{N,dc}\frac{f_L}{f_U}f_1.$$

Thus, the product Rw_2 becomes

$$Rw_2 = \frac{f_L}{f_U}\frac{f_2}{A_{dc}F_{N,dc}\dfrac{f_L}{f_U}f_1} = \frac{f_2}{A_{dc}F_{N,dc}f_1}.$$

With the parameters of this example

$$Rw_2 = \frac{1\text{ MHz}}{(100{,}000)(1)(10\text{ Hz})} = 1.$$

For $Rw_2 = 1$, Figure 8.12 provides $R = 0.317$, $w_1 = 2.47$, $w_2 = 3.12$, and $\tau_C/\tau_A = 1.1$. Therefore, from $w_2 = f_2/f_C$,

$$f_C = \frac{f_2}{w_2} = \frac{1\text{ MHz}}{3.12} = 320.5\text{ kHz}.$$

Also, replacing f_L by f_U, w_1 of Equation 8.58a becomes $w_1 = f_C/f_U$; hence,

$$f_U = \frac{f_C}{w_1} = \frac{320.5\text{ kHz}}{2.47} = 129.8\text{ kHz}.$$

Finally, using $R = f_L/f_U$,

$$f_L = Rf_U = (0.317)(129.8\text{ kHz}) = 41.1\text{ kHz}.$$

Note that the resulting $|AF_N|$ as a function of frequency was plotted in Figure 8.16, where f_L and f_U were chosen to coincide with the values of this example.

The transfer functions and the time responses of Equations 8.67a,b and 8.73a,b can be used with τ_U replaced by τ_L.

EXAMPLE 8.26. In Example 8.25, $f_L = 41.1$ kHz, $f_C = 320.5$ kHz, and $\tau_C/\tau_A = 1.1$. Thus,

$$\tau_L = \frac{1}{2\pi f_L} = \frac{1}{2\pi(41.1\text{ kHz})} = 3.87\ \mu\text{s},$$

$$\tau_C = \frac{1}{2\pi f_C} = \frac{1}{2\pi(320.5\text{ kHz})} = 0.496\ \mu\text{s},$$

and

$$\tau_A = \frac{\tau_C}{1.1} = \frac{0.496\ \mu\text{s}}{1.1} = 0.45\ \mu\text{s}.$$

Equation 8.73a is applicable with τ_U replaced by τ_L. Thus, for an input voltage that is a step function with magnitude V_0:

$$\mathscr{L}\{V_{out}(t)\} = \frac{1}{s}\frac{M_{N,dc}V_0(1 + s\tau_L)}{(1 + s\tau_A)^3}$$

with $M_{N,dc} \cong 1$, $\tau_L = 3.87\ \mu$s, and $\tau_A = 0.45\ \mu$s. Also, by use of Equation 8.73b, $V_{out}(t)$ becomes

$$V_{out}(t) = M_{N,dc}V_0\left\{1 - \left[1 + \frac{t}{\tau_A} + \frac{1}{2}\left(1 - \frac{\tau_L}{\tau_A}\right)\left(\frac{t}{\tau_A}\right)^2\right]e^{-t/\tau_A}\right\}$$
$$= M_{N,dc}V_0\{1 - [1 + 2.22t - 18.8t^2]e^{-t/0.45}\}$$

where time t is in microseconds (μs).

Graph (*a*) of Figure 8.17 shows $V_{out}(t)/M_{N,dc}V_0$ as a function of time. As expected, there is a large overshoot: The peak of the transient is about 2.7 times its final value. As before, this overshoot can be eliminated by inserting a compensating network preceding or following the feedback amplifier. The insertion of a network with a transfer function of $(1 + s\tau_A)/(1 + s\tau_L)$ results in graph (*b*) of Figure 8.17, whereas the somewhat simpler transfer function of $1/(1 + s\tau_L)$ results in graph (*c*) of Figure 8.17. The propagation delay of the 50% point is 0.75 μs for graph (*b*) and it is 1.25 μs for graph (*c*); also, the 10%–90% rise time is 1.5 μs for graph (*b*) and it is 1.9 μs for graph (*c*). (See also Problems 8.75, 8.76, and 8.77.)

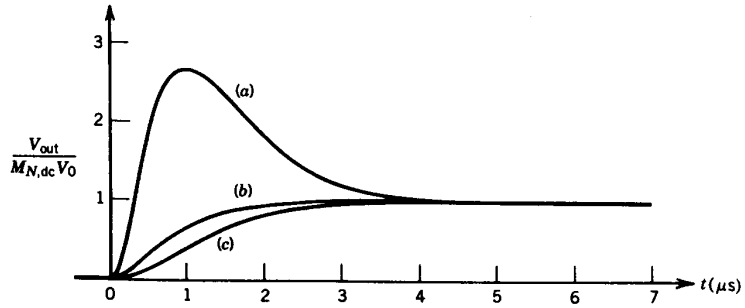

FIGURE 8.17 Transient response of a Type 13741 operational amplifier used as a voltage follower with lag–lead compensation: (a) transient response of the feedback amplifier, (b) transient response using a network with a transfer function of $(1 + s\tau_A)/(1 + s\tau_L)$ preceding or following the feedback amplifier, and (c) transient response using a network with a transfer function of $1/(1 + s\tau_L)$ preceding or following the feedback amplifier.

8.4 Operational Amplifiers with $A = A_{dc}/[(1 + jf/f_1)(1 + jf/f_2)(1 + jf/f_3)]$

This form of A is required for the accurate representation of high-performance operational amplifiers, such as those built using dielectric isolation technology. In what follows, frequency response is considered briefly, followed by descriptions of transient responses with frequency-independent feedback, lead–lag compensation, and lag–lead compensation.

8.4.1 Frequency Response

As before, the piecewise linear approximation of $|M_N|$ is obtained as the lesser of the piecewise linear approximation of $|A|$ and the piecewise linear approximation of $|1/F_N|$.

EXAMPLE 8.27. A Type 2539 wideband monolithic operational amplifier is built using dielectric isolation technology and, as an approximation, it is characterized by $A_{dc} = 30{,}000$, $f_1 = 20\,\text{kHz}$, and $f_2 = f_3 = 300\,\text{MHz}$. Thus, for frequencies between 20 kHz and 300 MHz, the piecewise linear approximation of $|A|$ becomes $30{,}000/(f/20\,\text{kHz}) = 600\,\text{MHz}/f$.

The operational amplifier is used with a frequency-independent feedback of $1/F_N = 20$. The piecewise linear approximation of $|A|$ becomes 20 at the frequency f where $600\,\text{MHz}/f = 20$, that is, at $f = 600\,\text{MHz}/20 = 30\,\text{MHz}$. Thus, the piecewise linear approximation of $|M_N|$ equals $|1/F_N| = 20$ for frequencies up to 30 MHz and it equals $600\,\text{MHz}/f$ for frequencies between 30 MHz and 300 MHz.

Bode plots for $|A|$, $|1/F_N|$, and $|M_N|$ are the subject of Problem 8.78.

8.4.2 Transient Response with Frequency-Independent Feedback

The transient response is now evaluated for the simplest case when corner frequency f_1 of A is much less than the other two corner frequencies. In this case, A can be approximated as

$$A = \frac{A_{dc}}{(jf/f_1)(1 + jf/f_2)(1 + jf/f_3)}. \tag{8.76}$$

For a frequency-independent feedback return $F_N = F_{N,dc}$, the resulting amplification can be written in the Laplace transform domain as

$$\begin{aligned}\frac{\mathscr{L}\{V_{out}(t)\}}{\mathscr{L}\{V_{in}(t)\}} &= \frac{A}{1 + AF_N} = \frac{A}{1 + AF_{N,dc}} \\ &= \frac{\dfrac{A_{dc}}{(s/2\pi f_1)(1 + s/2\pi f_2)(1 + s/2\pi f_3)}}{1 + \dfrac{A_{dc}F_{N,dc}}{(s/2\pi f_1)(1 + s/2\pi f_2)(1 + s/2\pi f_3)}} \\ &= \frac{A_{dc}}{A_{dc}F_{N,dc} + (s/2\pi f_1)(1 + s/2\pi f_2)(1 + s/2\pi f_3)}.\end{aligned} \tag{8.77}$$

When $A_{dc}F_{N,dc} \gg 1$, which is the usual case, Equation 8.77 can be approximated as

$$\frac{\mathscr{L}\{V_{out}(t)\}}{\mathscr{L}\{V_{in}(t)\}} = \frac{M_{N,dc}}{1 + (s/2\pi f_C)(1 + s/2\pi f_2)(1 + s/2\pi f_3)}, \tag{8.78a}$$

where

$$M_{N,dc} = \frac{A_{dc}}{1 + A_{dc}F_{N,dc}} \tag{8.78b}$$

and

$$f_C = A_{dc}F_{N,dc}f_1. \tag{8.78c}$$

It can be shown (see Problem 8.80) that f_C is the frequency where the piecewise linear approximation of $|AF_N|$ becomes 1, provided that f_2 and f_3 are above f_C.

Equation 8.78a can also be written

$$\frac{\mathscr{L}\{V_{out}(t)\}}{\mathscr{L}\{V_{in}(t)\}} = \frac{M_{N,dc}}{1 + (s/2\pi f_C)(1 + s/2\pi f_C w_{21})(1 + s/2\pi f_C w_{31})}, \tag{8.79a}$$

where

$$w_{21} = \frac{f_2}{f_C} = \frac{f_2}{A_{dc}F_{N,dc}f_1} \tag{8.79b}$$

and

$$w_{31} = \frac{f_3}{f_C} = \frac{f_3}{A_{dc}F_{N,dc}f_1}. \tag{8.79c}$$

Furthermore, Equation 8.79a can also be written

$$\frac{\mathscr{L}\{V_{\text{out}}(t)\}}{\mathscr{L}\{V_{\text{in}}(t)\}} = \frac{M_{N,\text{dc}}r}{\left(\frac{s}{2\pi f_C}\right)^3 + p\left(\frac{s}{2\pi f_C}\right)^2 + q\left(\frac{s}{2\pi f_C}\right) + r}, \tag{8.80a}$$

where

$$p = w_{21} + w_{31}, \tag{8.80b}$$

$$q = w_{21}w_{31}, \tag{8.80c}$$

and

$$r = w_{21}w_{31}. \tag{8.80d}$$

Note that $q = r$; they are distinguished only to conform to Appendix A.

The transient response is free of ringing when all three roots of the denominator of Equation 8.80a are real. According to Appendix A, this occurs when

$$\frac{b^2}{4} \leqslant -\frac{a^3}{27}, \tag{8.81a}$$

where

$$a = \frac{1}{3}(3q - p^2) \tag{8.81b}$$

and

$$b = \frac{1}{27}(2p^3 - 9pq + 27r). \tag{8.81c}$$

It can be shown (see Problem 8.82) that the criterion of Equation 8.81a leads to

$$w_{21} \geqslant 27\frac{w_{31}}{w_{21}}\left(\left(\frac{w_{31}}{w_{21}}+1\right)\left[1-2\left(\frac{w_{31}}{w_{21}}-1\right)\left(\frac{w_{31}}{w_{21}}-\frac{3}{2}\right)\right] + \sqrt{\left\{\left(\frac{w_{31}}{w_{21}}+1\right)\left[1-2\left(\frac{w_{31}}{w_{21}}-1\right)\left(\frac{w_{31}}{w_{21}}-\frac{3}{2}\right)\right]\right\}^2 + 27\left[\frac{w_{31}}{w_{21}}\left(\frac{w_{31}}{w_{21}}-1\right)\right]^2}\right)^{-1}. \tag{8.82}$$

By varying w_{31}/w_{21}, the criterion of Equation 8.82 can be represented as shown in Figure 8.18. Note that w_{21} and w_{31} are interchangeable in Figure 8.18, as is expected from Equation 8.76—although this interchangeability is not obvious in Equation 8.82.

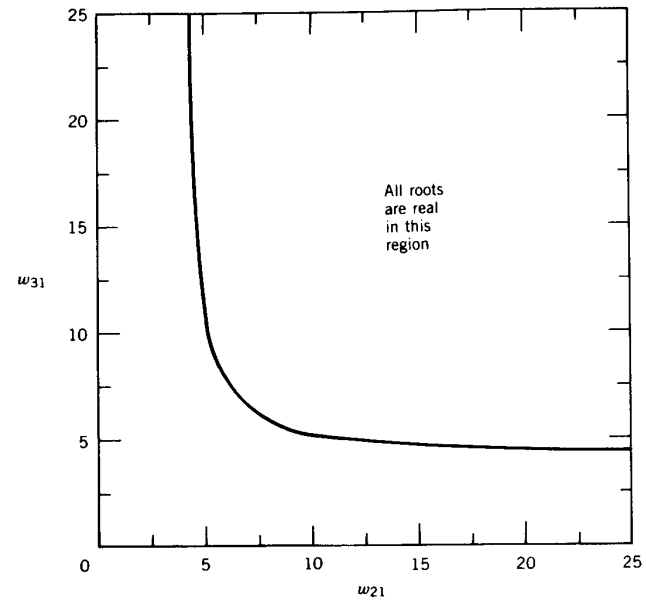

FIGURE 8.18 Conditions for real roots in a feedback amplifier with the amplification A of Equation 8.76 and with a frequency-independent feedback $F_{N,\text{dc}}$. Variables w_{21} and w_{31} are given by Equations 8.79b and 8.79c.

EXAMPLE 8.28. A Type 2539 wideband monolithic operational amplifier is characterized by $A_{\text{dc}} = 30{,}000$, $f_1 = 20$ kHz, and $f_2 = f_3 = 300$ MHz. Thus, $f_1 \ll f_2$ and $f_1 \ll f_3$; therefore, Equations 8.76 and 8.77 are applicable. The operational amplifier is used in a noninverting feedback amplifier with a frequency-independent feedback of $F_N = F_{N,\text{dc}} = 1/20$. Thus, $A_{\text{dc}}F_{N,\text{dc}} = (30{,}000)(1/20) = 1500 \gg 1$; therefore, Equations 8.78–8.82 and Figure 8.18 are applicable.

From Equation 8.78b,

$$M_{N,\text{dc}} = \frac{A_{\text{dc}}}{1 + A_{\text{dc}}F_{N,\text{dc}}} = \frac{30{,}000}{1 + 30{,}000/20} = 19.987 \cong 20$$

and, from Equation 8.78c,

$$f_C = A_{\text{dc}}F_{N,\text{dc}}f_1 = (30{,}000)(1/20)(20\text{ kHz}) = 30\text{ MHz}.$$

Also, from Equation 8.79b,

$$w_{21} = \frac{f_2}{f_C} = \frac{300\text{ MHz}}{30\text{ MHz}} = 10$$

and, from Equation 8.79c,

$$w_{31} = \frac{f_3}{f_C} = \frac{300\text{ MHz}}{30\text{ MHz}} = 10.$$

According to Equation 8.82 and Figure 8.18, all roots are real and the transient response is free of ringing when $w_{21} = w_{31} \geqslant 6.75$. Thus, the transient response of the feedback amplifier in this example is free of ringing because it has $w_{21} = w_{31} = 10$.

In Example 8.28, a Type 2539A wideband monolithic operational amplifier was used with a frequency-independent feedback of $F_N = F_{N,\text{dc}} = 1/20$ and a resulting dc amplification $M_{N,\text{dc}} \cong 20$. It was seen that the transient response of the feedback amplifier is free of ringing. Example 8.29 shows that this is not the case with $M_{N,\text{dc}} \cong 10$.

EXAMPLE 8.29. A Type 2539A wideband monolithic operational amplifier is characterized by $A_{\text{dc}} = 30{,}000$, $f_1 = 20\text{ kHz}$, and $f_2 = f_3 = 300\text{ MHz}$. Thus, $f_1 \ll f_2$ and $f_1 \ll f_3$; therefore, Equations 8.76 and 8.77 are applicable. The operational amplifier is used in a noninverting feedback amplifier with a frequency-independent feedback of $F_N = F_{N,\text{dc}} = 1/10$. Thus, $A_{\text{dc}}F_{N,\text{dc}} = (30{,}000)(1/10) = 3000 \gg 1$; therefore, Equations 8.78–8.82 and Figure 8.18 are applicable.

From Equation 8.78b,

$$M_{N,\text{dc}} = \frac{A_{\text{dc}}}{1 + A_{\text{dc}}F_{N,\text{dc}}} = \frac{30{,}000}{1 + 30{,}000/10} = 9.997 \cong 10$$

and, from Equation 8.78c,

$$f_C = A_{\text{dc}}F_{N,\text{dc}}f_1 = (30{,}000)(1/10)(20\text{ kHz}) = 60\text{ MHz}.$$

Also, from Equation 8.79b,

$$w_{21} = \frac{f_2}{f_C} = \frac{300\text{ MHz}}{60\text{ MHz}} = 5$$

and, from Equation 8.79c,

$$w_{31} = \frac{f_3}{f_C} = \frac{300\text{ MHz}}{60\text{ MHz}} = 5.$$

According to Equation 8.82 and Figure 8.18, all roots are real and the transient response is free of ringing when $w_{21} = w_{31} \geqslant 6.75$. Thus, the transient response of the feedback amplifier in this example is *not* free of ringing because it has $w_{21} = w_{31} = 5$.

8.4.3 Transient Response with Lead–Lag Compensation

Lead–lag compensation consists of the inclusion of a frequency-dependent feedback network as shown in Figure 7.4 (page 96) and described by Equations 7.43–7.47 in Section 7.4.

When V_{in} and V_{out} are represented in the Laplace transform domain then, with $\tau_1 = 1/2\pi f_1$, $\tau_2 = 1/2\pi f_2$, $\tau_3 = 1/2\pi f_3$, $\tau_L = 1/2\pi f_L$, $\tau_U = 1/2\pi f_U$, and with $f_1 \ll f_2$ and $f_1 \ll f_3$,

$$\frac{\mathscr{L}\{V_{\text{out}}(t)\}}{\mathscr{L}\{V_{\text{in}}(t)\}} = \frac{\dfrac{A_{\text{dc}}}{(1 + s\tau_1)(1 + s\tau_2)(1 + s\tau_3)}}{1 + \dfrac{A_{\text{dc}}F_{N,\text{dc}}}{(1 + s\tau_1)(1 + s\tau_2)(1 + s\tau_3)}\dfrac{1 + s\tau_L}{1 + s\tau_U}}$$

$$\cong \frac{\dfrac{A_{\text{dc}}}{s\tau_1(1 + s\tau_2)(1 + s\tau_3)}}{1 + \dfrac{A_{\text{dc}}F_{N,\text{dc}}}{s\tau_1(1 + s\tau_2)(1 + s\tau_3)}\dfrac{1 + s\tau_L}{1 + s\tau_U}}, \tag{8.83}$$

where $\tau_L > \tau_U$, therefore also $f_L < f_U$.

The value of τ_L is usually chosen to be in the vicinity of τ_2 or τ_3. A simple choice is $\tau_L = \tau_3$; that is, $f_L = f_3$ (pole-zero cancellation): This case is discussed in Section 8.4.3.1. The case of $f_L > f_3$ (i.e., $\tau_L < \tau_3$) is outlined in Section 8.4.3.2, and the case of $f_L < f_3$ (i.e., $\tau_L > \tau_3$) is not discussed.

8.4.3.1 LEAD–LAG COMPENSATION WITH $f_L = f_3$

In this case (pole–zero cancellation), Equation 8.83 becomes

$$\frac{\mathscr{L}\{V_{\text{out}}(t)\}}{\mathscr{L}\{V_{\text{in}}(t)\}} \cong \frac{\dfrac{A_{\text{dc}}}{s\tau_1(1 + s\tau_2)(1 + s\tau_3)}}{1 + \dfrac{A_{\text{dc}}F_{N,\text{dc}}}{s\tau_1(1 + s\tau_2)(1 + s\tau_U)}}$$

$$= \frac{A_{\text{dc}}}{A_{\text{dc}}F_{N,\text{dc}} + s\tau_1(1 + s\tau_2)(1 + s\tau_U)}\frac{1 + s\tau_U}{1 + s\tau_3}$$

$$= \frac{A_{\text{dc}}}{A_{\text{dc}}F_{N,\text{dc}} + (s/2\pi f_1)(1 + s/2\pi f_2)(1 + s/2\pi f_U)}\frac{1 + s/2\pi f_U}{1 + s/2\pi f_3}. \tag{8.84}$$

In considering the last form of this equation, note that it is a product of two fractions. The root of the denominator of the second fraction is always real. Also, the first fraction equals Equation 8.77 with f_3 replaced by f_U. Thus, for the purpose of determining whether all roots are real, the results of Section 8.4.2 may be used with f_3 replaced by f_U.

EXAMPLE 8.30. A Type 2539 wideband monolithic operational amplifier is characterized by $A_{dc} = 30{,}000$, $f_1 = 20$ kHz, and $f_2 = f_3 = 300$ MHz. The operational amplifier is used in a noninverting feedback amplifier with lead–lag compensation. Resistor values are $R_F = 900\,\Omega$ and $R_I = 100\,\Omega$; hence, $F_{N,dc} = 1/10$ and $M_{N,dc} \cong 10$. The value of C_I is 1.8 pF, which includes the input capacitance of the operational amplifier and stray capacitances. The value of C_F is chosen as $C_F = 0.59$ pF.

Thus, from Equation 7.43c,

$$f_L = \frac{1}{2\pi R_F C_F} = \frac{1}{2\pi(900\,\Omega)(0.59\text{ pF})} \cong 300\text{ MHz}$$

and, from Equation 7.43d,

$$f_U = \frac{1}{2\pi \dfrac{R_F R_I}{R_F + R_I}(C_F + C_I)} = \frac{1}{2\pi \dfrac{(900\,\Omega)(100\,\Omega)}{900\,\Omega + 100\,\Omega}(0.59\text{ pF} + 1.8\text{ pF})} \cong 738\text{ MHz}.$$

Thus, $f_L = f_3$. Also, $f_1 \ll f_2$, $f_1 \ll f_3$, and $A_{dc}F_{N,dc} \gg 1$. Hence, the piecewise linear approximation of $|AF_N|$ is as shown in Figure 8.19; also, Equation 8.84 is applicable.

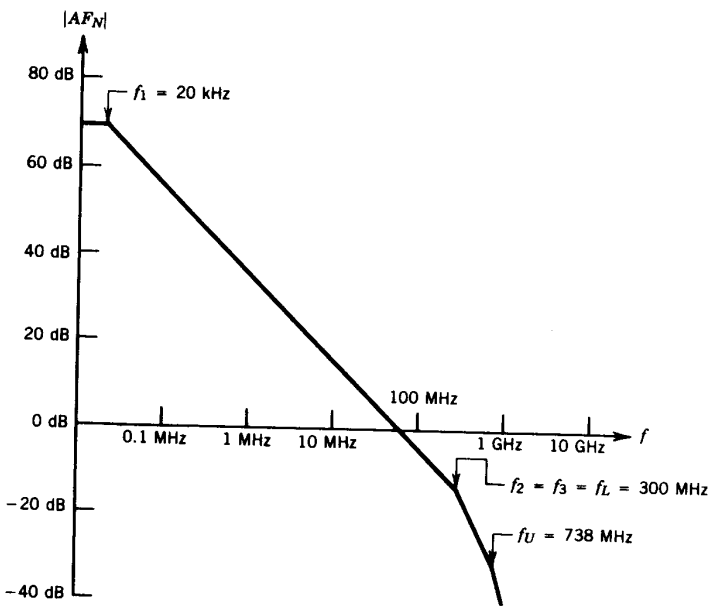

FIGURE 8.19 Piecewise linear approximation of $|AF_N|$ in Example 8.30.

The value of f_C is, from Equation 8.78c,

$$f_C = A_{dc}F_{N,dc}f_1 = (30{,}000)(1/10)(20\text{ kHz}) = 60\text{ MHz}$$

and, from Equation 8.79b,

$$w_{21} = \frac{f_2}{f_C} = \frac{300\text{ MHz}}{60\text{ MHz}} = 5.$$

However, in evaluating Equation 8.79c for w_{31}, f_3 has to be replaced by f_U:

$$w_{31} = \frac{f_U}{f_C} = \frac{738\text{ MHz}}{60\text{ MHz}} = 12.3.$$

A close inspection of Figure 8.18 shows that the $w_{21} = 5$, $w_{31} = 12.3$ point is within the region where all roots are real (see also Problem 8.91). Thus, in this example, the transient response of the feedback amplifier is free of ringing. This is an improvement over the feedback amplifier of Example 8.29 that also had $M_{N,dc} \cong 10$, but it used frequency-independent feedback and its transient response was *not* free of ringing.

To find the transient response, the transfer function of Equation 8.84 has to be rewritten using the roots of the denominator.

EXAMPLE 8.31. In Example 8.30, the values of w_{21} and w_{31} were such that the point they represented in Figure 8.18 was barely within the region where all roots are real. Also, Problem 8.91 indicates that the two sides in the inequality of Equation 8.81a are almost equal. In what follows, the approximation is made that the point in Figure 8.18 lies *on* the boundary line between the two regions, and that Equation 8.81a is an equality. In this case, the roots of the denominator in the left fraction of Equation 8.84 can be computed with Equations 8.80b, 8.80c, 8.80d, 8.81b, and 8.81c with f_3 replaced by f_U (this is a result of the similarity of Equation 8.77 and the left fraction in Equation 8.84).

Thus, with $w_{21} = 5$ and $w_{31} = 12.3$,

$$p = w_{21} + w_{31} = 5 + 12.3 = 17.3,$$

$$q = r = w_{21}w_{31} = (5)(12.3) = 61.5,$$

and

$$b = \frac{1}{27}(2p^3 - 9pq + 27r) = \frac{1}{27}[2(17.3)^3 - 9(17.3)(61.5) + 27(61.5)] = 90.4.$$

The roots of a cubic equation are given in Appendix A, with at least two roots equal when $b^2/4 = -a^3/27$, which is the case here. The two equal roots are given as

$$\left(\frac{s}{2\pi f_C}\right)_A = -\sqrt[3]{-\frac{b}{2} - \frac{p}{3}} = -\sqrt[3]{-\frac{90.4}{2} - \frac{17.3}{3}} = -2.2$$

and the third root is given as

$$\left(\frac{s}{2\pi f_C}\right)_B = 2\sqrt[3]{-\frac{b}{2} - \frac{p}{3}} = 2\sqrt[3]{-\frac{90.4}{2} - \frac{17.3}{3}} = -12.9.$$

The corresponding time constants are

$$\tau_A = -\frac{1}{s_A} = \frac{1}{2.2}\frac{1}{2\pi f_C} = \frac{1}{2.2}\frac{1}{2\pi(60\text{ MHz})} = 1.2\text{ ns}$$

and

$$\tau_B = -\frac{1}{s_B} = \frac{1}{12.9}\frac{1}{2\pi f_C} = \frac{1}{12.9}\frac{1}{2\pi(60\text{ MHz})} = 0.205\text{ ns}.$$

The time constants corresponding to f_U and f_3 are

$$\tau_U = \frac{1}{2\pi f_U} = \frac{1}{2\pi(738\text{ MHz})} = 0.215\text{ ns}$$

and

$$\tau_3 = \frac{1}{2\pi f_3} = \frac{1}{2\pi(300\text{ MHz})} = 0.53\text{ ns}.$$

Thus (see Problem 8.92), the transfer function becomes

$$\frac{\mathscr{L}\{V_{out}(t)\}}{\mathscr{L}\{V_{in}(t)\}} = \frac{M_{N,dc}}{(1+s\tau_A)^2(1+s\tau_B)}\frac{1+s\tau_U}{1+s\tau_3}$$

$$= \frac{M_{N,dc}}{[1+s(1.2\text{ ns})]^2[1+s(0.205\text{ ns})]}\frac{1+s(0.215\text{ ns})}{1+s(0.53\text{ ns})},$$

which can be approximated (see Problem 8.93) as

$$\frac{\mathscr{L}\{V_{out}(t)\}}{\mathscr{L}\{V_{in}(t)\}} \cong \frac{M_{N,dc}}{[1+s(1.2\text{ ns})]^2[1+s(0.53\text{ ns})]}.$$

The output voltage as a function of time is obtained by multiplying the transfer function by the Laplace transform of the input voltage and taking the inverse Laplace transform of the product.

EXAMPLE 8.32. In the feedback amplifier of Example 8.31, the input voltage is a step function with magnitude V_0. Thus, Equation 5.30 is applicable and the resulting output voltage is given by Equation 5.31a with $\tau_1 = 0.53$ ns, $\tau_2 = 1.2$ ns, and with A_{dc} replaced by $M_{N,dc} \cong 10$. Therefore, $\tau_2/\tau_1 = 1.2\text{ ns}/0.53\text{ ns} = 2.26$ in Equation 5.31a, and

$$V_{out}(t) = M_{N,dc}V_0\left[1 - 0.63\,e^{-t/0.53\text{ ns}} - \left(0.37 + \frac{t}{0.67\text{ ns}}\right)e^{-t/1.2\text{ ns}}\right].$$

This is shown in Figure 8.20. The propagation delay of the 50% point is $t_{50} \approx 2.6$ ns and the 10%–90% rise time is $t_{10-90} \approx 4.3$ ns.

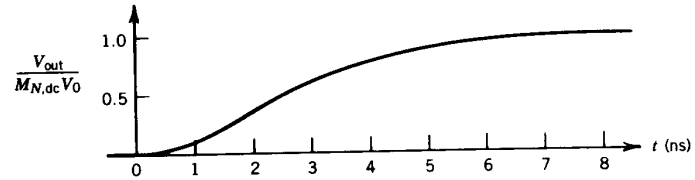

FIGURE 8.20 Transient response of a Type 2539 operational amplifier using lead–lag compensation with $f_L = f_3$; also, $M_{N,dc} \cong 10$.

8.4.3.2 LEAD–LAG COMPENSATION WITH $f_L > f_3$

As was the case without corner frequency f_3 in Section 8.3.2.2, here too it is convenient to introduce the frequency ratio R by Equation 8.56, the crossover frequency f_C by Equation 8.57a, and the frequency ratios w_1 and w_2 by Equations 8.58a and 8.58b. However, because Equation 8.83 is more complicated than Equation 8.49, the equations corresponding to Equations 8.59–8.61 become more complicated here. Specifically, the denominators of Equations 8.59a and 8.60 become fourth order in s and the denominator of Equation 8.61 becomes a product of four terms. Finding criteria for transients without ringing—hence for real roots—becomes more difficult, and only limited results are outlined here.

Figure 8.21 shows results for the case when frequency ratio R of Equation 8.56 can be approximated as $R = 0$, that is, when $f_2 \ll f_L$. As before, frequency ratios w_1 and w_2 are given by Equations 8.58a and 8.58b. The derivation of Figure 8.21 is the subject of Problem 8.97.

Note that, as expected from a comparison of Equations 8.49 and 8.83, the $f_3/f_2 = \infty$ graph of Figure 8.21 is identical with the $R = 0$ graph of Figure 8.9. Also, when real roots are desired, lowering f_3/f_2 necessitates increasing $w_2 = f_U/f_C$, which is not unreasonable.

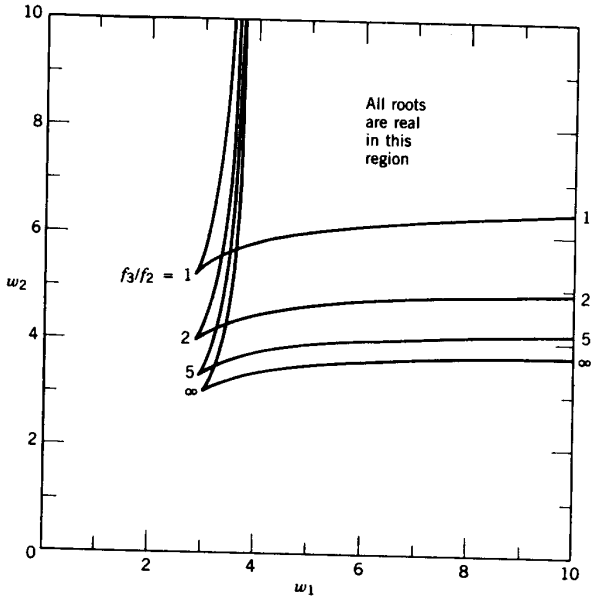

FIGURE 8.21 Criteria for real roots—hence for transients without ringing—for lead–lag compensation with $f_L > f_3$ and with $f_2 \ll f_L$. Frequency ratios w_1 and w_2 are given by Equation 8.58a and 8.58b.

The cusps of the graphs represent solutions where three roots out of the four roots are equal. This limit is detailed as a function of f_2/f_3 in Figure 8.22.

Note that, as expected, data for $f_3/f_2 = \infty$—that is, for $f_2/f_3 = 0$ in Figure 8.22—is identical with data for $R = 0$ in Figure 8.12. The three identical real roots are represented by τ_A and the fourth root by τ_B in Figure 8.22, where also w_1 and w_2 are given by Equations 8.58a and 8.58b.

Note that corner frequency f_L is usually chosen in the vicinity of f_3. Because $f_2 \ll f_L$, when $R \cong 0$, this implies $f_2 \ll f_3$. Hence, the $R = 0$ approximation is only of limited use in lead–lag compensation when f_3 is significant. (However, it it often provides a useful approximation in lag–lead compensation discussed in the next section.)

Figures 8.23–8.25 (pages 178–180) describe criteria for real roots with three identical roots, for $f_3/f_2 = 1$, 2, and 5. They are similar to Figure 8.12, which represents the limit of $f_3/f_2 = \infty$. The three identical roots are represented by τ_A, the fourth root by τ_B. (See also Problem 8.98.)

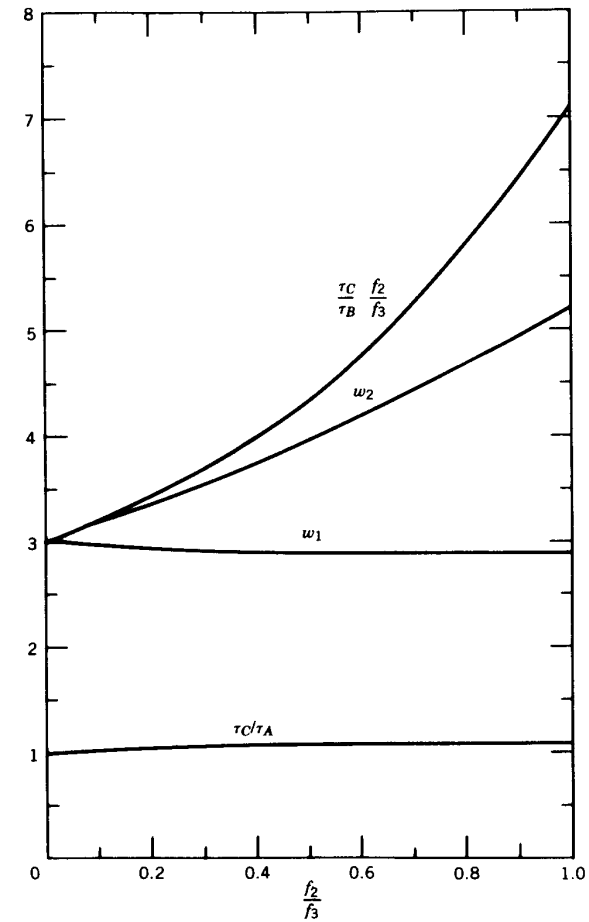

FIGURE 8.22 Criteria for real roots, including three identical roots τ_A, for lead–lag compensation with $f_L > f_3$ and with $f_2 \ll f_L$. Frequency ratios w_1 and w_2 are given by Equations 8.58a and 8.58b.

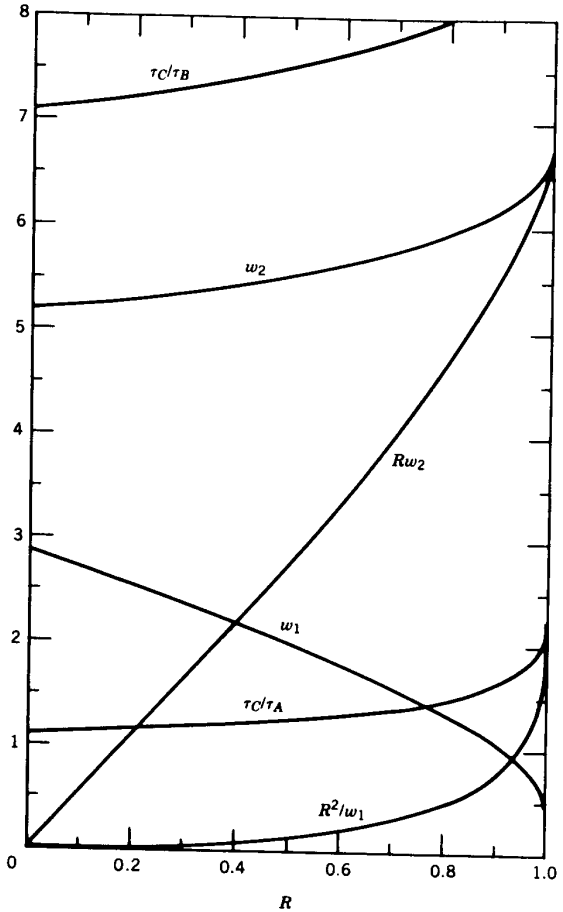

FIGURE 8.23 Criteria for real roots, including three identical roots τ_A, for lead–lag compensation and $f_3 = f_2$. Frequency ratios w_1 and w_2 are given by Equations 8.58a and 8.58b.

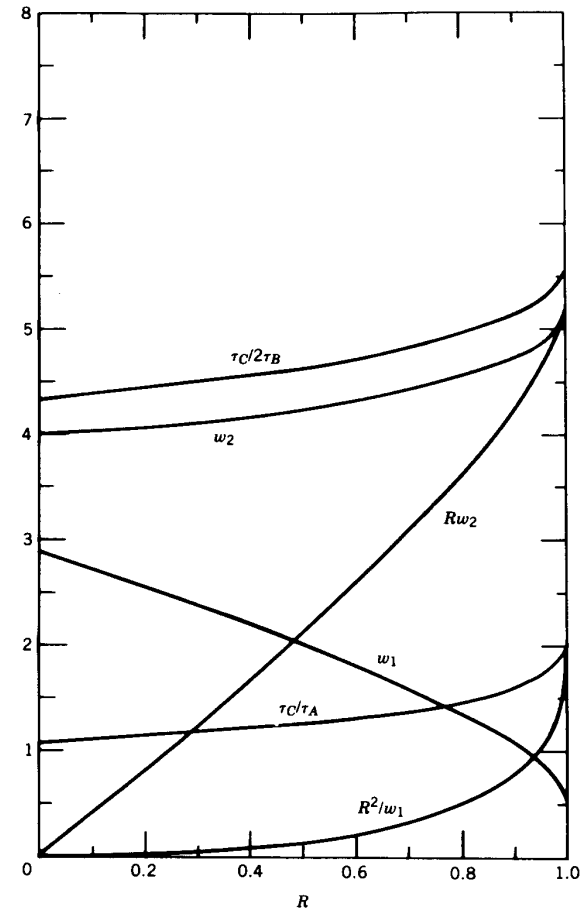

FIGURE 8.24 Criteria for real roots, including three identical roots τ_A, for lead–lag compensation and $f_3 = 2f_2$. Frequency ratios w_1 and w_2 are given by Equations 8.58a and 8.58b.

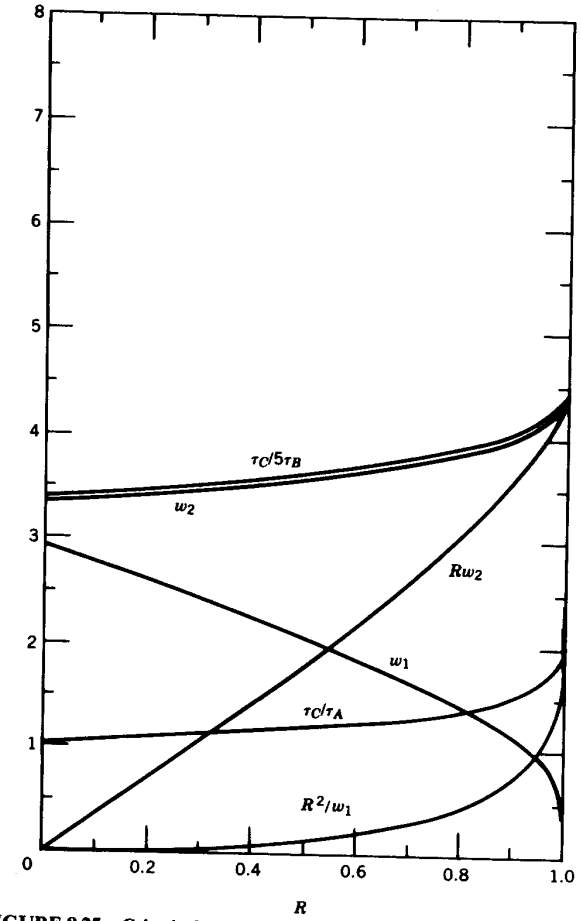

FIGURE 8.25 Criteria for real roots, including three identical roots τ_A, for lead–lag compensation and $f_3 = 5f_2$. Frequency ratios w_1 and w_2 are given by Equations 8.58a and 8.58b.

8.4.4 Transient Response with Lag–Lead Compensation

In a way similar to Section 8.3.3, the results of lead–lag compensation are applicable here too with τ_2, τ_L, and τ_U replaced by τ_L, τ_U, and τ_2, respectively, and with f_2, f_L, and f_U replaced by f_L, f_U, and f_2, respectively, in the *denominator* of the transfer function.

EXAMPLE 8.33. A Type 2539 wideband monolithic operational amplifier is characterized by $A_{dc} = 30{,}000$, $f_1 = 20$ kHz, and $f_2 = f_3 = 300$ MHz. Lag–lead compensation is applied with $F_{N,dc} = 1$ (voltage follower), and a transient response without ringing is desired.

By choosing, somewhat arbitrarily, three equal roots, the results of Figure 8.23 can be used. However, in the $R = f_2/f_L$ of Equation 8.56, f_2 has to be replaced by f_L and f_L by f_U; thus, R becomes $R = f_L/f_U$. Also, in the $w_2 = f_U/f_C$ of Equation 8.58b, f_U has to be replaced by f_2; thus, w_2 becomes $w_2 = f_2/f_C$. Equation 8.57a is still applicable because τ_1 of Equation 8.75c remains unaltered. Hence f_1 remains unaltered as well; however, now $R = f_L/f_U$.

Combining the above results, product Rw_2 can be written

$$Rw_2 = \frac{f_L}{f_U}\frac{f_2}{f_C}.$$

Also, Equation 8.57a can now be written

$$f_C = A_{dc}F_{N,dc}Rf_1 = A_{dc}F_{N,dc}\frac{f_L}{f_U}f_1.$$

Thus, the product Rw_2 becomes

$$Rw_2 = \frac{f_L}{f_U}\frac{f_2}{A_{dc}F_{N,dc}\dfrac{f_L}{f_U}f_1} = \frac{f_2}{A_{dc}F_{N,dc}f_1}.$$

With the parameters of this example

$$Rw_2 = \frac{300\text{ MHz}}{(30{,}000)(1)(20\text{ kHz})} = 0.5.$$

For $Rw_2 = 0.5$, Figure 8.23 provides $R = 0.095$, $w_1 = 2.72$, $w_2 = 5.25$, $\tau_C/\tau_A = 1.12$, and $\tau_C/\tau_B = 7.17$. Thus, from $w_2 = f_2/f_C$,

$$f_C = \frac{f_2}{w_2} = \frac{300\text{ MHz}}{5.25} = 57.1\text{ MHz}.$$

Also, replacing f_L by f_U, w_1 of Equation 8.58a becomes $w_1 = f_C/f_U$; hence,

$$f_U = \frac{f_C}{w_1} = \frac{57.1\text{ MHz}}{2.72} = 21\text{ MHz}.$$

Finally, using $R = f_L/f_U$,

$$f_L = Rf_U = (0.095)(21\text{ MHz}) = 2\text{ MHz}.$$

The transfer functions and the time responses may also be found in a way similar to Section 8.3.3.

EXAMPLE 8.34. In Example 8.33, $f_L = 2$ MHz, $f_C = 57.1$ MHz, $\tau_C/\tau_A = 1.12$, and $\tau_C/\tau_B = 7.17$. Thus,

$$\tau_L = \frac{1}{2\pi f_L} = \frac{1}{2\pi(2\text{ MHz})} \cong 80\text{ ns},$$

$$\tau_C = \frac{1}{2\pi f_C} = \frac{1}{2\pi(57.1\text{ MHz})} \cong 2.8\text{ ns},$$

$$\tau_A = \frac{\tau_C}{1.12} = \frac{2.8\text{ ns}}{1.12} \cong 2.5\text{ ns},$$

and

$$\tau_B = \frac{\tau_C}{7.17} = \frac{2.8\text{ ns}}{7.17} \cong 0.4\text{ ns}.$$

For an input voltage that is a step function with magnitude V_0,

$$\mathscr{L}\{V_{out}(t)\} = \frac{1}{s}\frac{M_{N,dc}V_0(1 + s\tau_L)}{(1 + s\tau_A)^3(1 + s\tau_B)},$$

with $M_{N,dc} \cong 1$, $\tau_L \cong 80$ ns, $\tau_A \cong 2.5$ ns, and $\tau_B \cong 0.4$ ns. It can be shown (see Problem 8.100) that the inverse Laplace transform of $\mathscr{L}\{V_{out}(t)\}$ is as shown in Figure 8.26.

Note that the transient response has a large overshoot: The peak is almost nine times the final value. As before, the overshoot can be eliminated by inserting a compensating network preceding or following the feedback amplifier.

8.5 Inverting Feedback Amplifiers

An inverting feedback amplifier was shown in Figure 7.8 and an extended circuit in Figure 7.9. It was seen that if the performance of the circuit using lead–lag compensation with $f_L = f_2$ (pole-zero cancellation) was acceptable for $R_{source} = \infty$, then it was also acceptable for any value of R_{source}.

Whether the transient response is free of ringing or not is determined by AF_N and is independent of the input. Thus, if the transient response of the circuit of Figure 7.9 using lead–lag compensation with $f_L = f_2$ (or $f_L = f_3$) is free of ringing for $R_{source} = \infty$, then it is also free of ringing for any value of R_{source}.

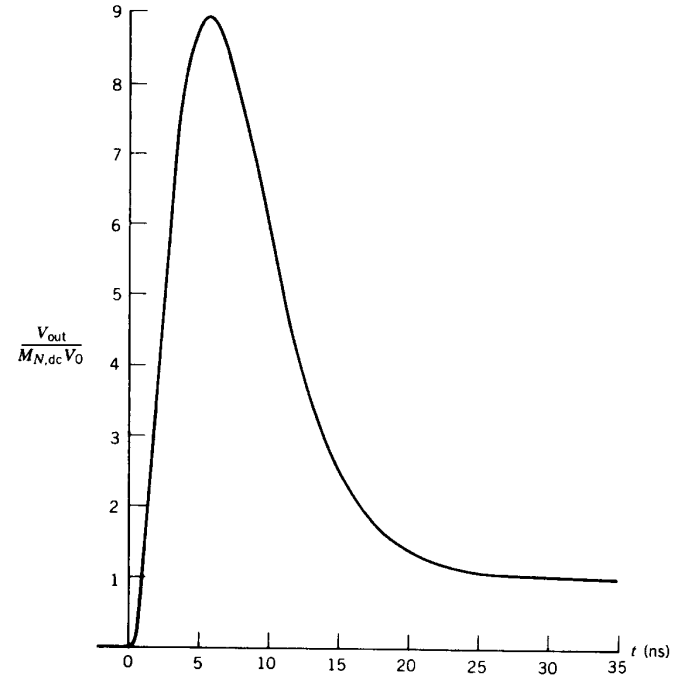

FIGURE 8.26 Transient response of a Type 2539 operational amplifier used as a voltage follower.

EXAMPLE 8.35. In Example 8.30, a Type 2539 wideband monolithic operational amplifier was used with $f_L = f_3$. The values of the feedback network were $R_F = 900\,\Omega$, $R_I = 100\,\Omega$, $C_F = 0.59$ pF, and $C_I = 1.8$ pF, and the transient response was free of ringing.

Thus, the transient response of the circuit of Figure 7.9 is free of ringing for any value of R_{source}, if it uses a Type 2539 operational amplifier, $R_F = 900\,\Omega$, $R_2 + R_3 = 100\,\Omega$, $C_F = 0.59$ pF, and $C_I = 1.8$ pF.

The situation becomes more complicated when R_{source} of Figure 7.9 is not a pure resistance. In such cases, it is often necessary to specify a minimum value for R_1 if a transient response without ringing is desired.

8.6 Computer-Aided Design

In the foregoing, this chapter introduced analytical and graphical methods for finding the frequency response and the transient response of feedback amplifiers. These methods also provided guidance for the choice of component values required to achieve desired performance characteristics, such as transients that are free of ringing. In some cases, they also provided insight into the tradeoffs that are possible in a given circuit, such as the tradeoff between operating speed and the maximum output voltage swing.

It was also seen that the derivation of these methods could become difficult even in the simple circuits discussed here. Also, in some cases, the use of the resulting equations and design graphs required a substantial amount of work.

An alternative to the analytical and graphical methods is provided by *computer-aided design* methods. Contrary to their name, these methods are suitable mainly for *analyzing* the performance of a *given* circuit. The transient response is usually computed by advancing the time in small time increments and evaluating voltages and currents in the circuit at each time step. Thus, the writing of equations is eliminated, and the transient response is obtained directly as a graph or a listing. The frequency response can also be found, as well as the effects of input offset voltage, input currents, and other parameters.

Computer-aided design is often a convenient tool for finding the performance of a given circuit when a computer and a suitable program are available. Also, changing the values of components (circuit parameters) is usually easy; hence, circuits can be evaluated with different combinations of component values.

EXAMPLE 8.36. A Type 9914A wideband hybrid operational amplifier was used in Examples 8.17 and 8.18 with $M_{N,dc} = 10$ and with lead–lag compensation with $f_L > f_2$. It was found that, with $f_C = 156.25$ MHz and $f_L = 80$ MHz, the transient was free of ringing when $w_2 = f_U/f_C$ was between 3.4 and 3.5, that is, when f_U was between 531 MHz and 547 MHz.

In practice, such a narrow range of f_U is difficult to guarantee with realistic variations of circuit parameters. On the other hand, a small amount of ringing on the transient response may be acceptable.

A computer-aided design process may proceed as follows. As a starting point, the feedback amplifier is designed with $f_U = 3.4f_C = 531$ MHz. The resulting transient response is found using computer-aided methods. Next, circuit parameters are varied and the resulting transient responses found, again by computer-aided methods. As a last step, the transient responses are evaluated to determine whether the resulting ringing is acceptable.

Computer-aided design can also be used for generating design graphs, such as Figures 8.21–8.25. This can be attained by an exhaustive evaluation of transients with all possible combinations of the variables of the horizontal and vertical axes. Such a procedure requires the evaluation of many transients: in the rough vicinity of 10,000 transients for the accuracy of Figures 8.21–8.25. This may become expensive and time-consuming; nevertheless, such use of computer-aided design is often practical, especially by use of mainframe computers.

PROBLEMS

8.1 Verify Equation 8.3.

8.2 Verify Equations 8.4–8.6.

8.3 Derive Equation 8.7 from Equation 8.6. [*Hint*: Note the similarities between Equations 8.6 and 6.8.]

8.4 Verify Equation 8.9.

8.5 Verify Equations 8.10 and 8.11.

8.6 Derive Equation 8.12 from Equation 8.11.

8.7 Verify the statement following Equation 8.13 at the end of Section 8.1.3.

8.8 Approximate the amplification of the operational amplifier in Example 7.17 as $A = 30{,}000/(1 + jf/20\text{ kHz})$ and sketch piecewise linear approximations for $|A|$, $|1/F_N|$, and $|M_N|$.

8.9 Verify Equations 8.24 and 8.25.

8.10 Approximate $1 + jf/20\text{ kHz}$ by $jf/20\text{ kHz}$, and show that $|AF_N|$ of Example 8.5 becomes 1 at a frequency of 63 MHz.

8.11 Verify Equations 8.26–8.29.

8.12 Prove Equations 8.30a and 8.30b.

8.13 Verify Equation 8.31.

8.14 Derive Equations 8.32a–f from Equations 8.29 and 8.31.

8.15 Derive Equations 8.34 and 8.35a from Equations 8.32c, 8.32d, and 8.33.

***8.16** Derive Equation 8.35b from Equation 8.35a by the following steps:

(a) Substitute $(f_L/f_U)(f_U/f_C)_{max}$ for f_L/f_C in Equation 8.35a.

(b) Find the two solutions $(f_U/f_C)_{max}$ of the resulting second-order equation.

(c) Show that one solution is as given by Equation 8.35b, where $(f_U/f_C)_{max} < 1$ for $0 < f_L/f_U < 1$, which is the case for lag–lead compensation.

(d) Show that the other solution results in $(f_U/f_C)_{max} > 1$ for $0 < f_L/f_U < 1$; hence, it is of no interest.

8.17 Verify that Figure 8.3 is consistent with Equations 8.36a and 8.36b.

***8.18** Derive Equations 8.36a and 8.36b from Equation 8.35b using the series expansion of the square root for small values of f_L/f_U in Equation 8.35b. [*Hint:* Use the approximation $\sqrt{1+x} \cong 1 + x/2 - x^2/8$ for $|x| \ll 1$.]

8.19 Verify that the condition $A_{dc}F_{N,dc}f_L/f_U \gg 1$ of Equation 8.33c is valid in Example 8.8.

*Optional problem.

8.20 Verify that Figure 8.4 is consistent with the approximation $(f_C/f_U)_{\min} \cong 4 - 2f_L/f_U$ when $0 < f_L/f_U \ll 1$.

***8.21** Verify that the approximation $(f_C/f_U)_{\min} \cong 4 - 2f_L/f_U$ is valid when $0 < f_L/f_U \ll 1$. Use the series expansion of the square root for small values of f_L/f_U given in Problem 8.18.

8.22 Verify Equations 8.37a–c.

8.23 Derive Equation 8.38b from Equation 8.38a.

8.24 Verify Equations 8.39 and 8.40.

8.25 Derive Equation 8.41.

8.26 Use Equation 8.41 and show that V_{out} of Figure 8.5 has an initial slope of $19.5M_{N,dc}V_0$ at $t/\tau = 0$.

8.27 Use Equation 8.41 and show that V_{out} of Figure 8.5 has its maximum of approximately $7.5M_{N,dc}V_0$ at $t/\tau \cong 1.05$.

8.28 Derive Equations 8.43a–e from Equation 8.42.

8.29 Derive Equations 8.44a, 8.45, 8.46, and 8.47.

8.30 Verify the results of Example 8.10.

8.31 Verify Equation 8.48.

8.32 Verify the results of Example 8.11.

8.33 Verify the results of Example 8.12.

8.34 Find the phase margin in Example 8.12.

8.35 A stage in an operational amplifier is represented by the lag network of Figure 5.1 (page 39), with I_{in} proportional to the input voltage of the stage. Capacitance C is controlled within $\pm 10\%$; however, variations of R are much greater because R represents collector (or drain) resistances that are poorly controlled in the integrated circuit process. Show that an increase in the value of R increases the dc amplification and reduces the value of the corner frequency $f_1 = 1/2\pi RC$; however, it has no influence on the amplification of the stage at frequencies $f \gg f_1$ as long as C remains constant.

***8.36** Verify the statements following Example 8.13 at the end of Section 8.3.1. [*Hint:* Use Equations 6.40–6.42 and Figure 6.14.]

8.37 A Type 741 internally compensated monolithic operational amplifier is characterized by $A_{dc} = 200{,}000$, $f_1 = 10$ Hz, and $f_2 = 10$ MHz, and it is used with frequency-independent feedback. Show that the frequency response magnitude is free of peaking and the transient response is free of ringing for all possible $M_{N,dc}$, including $M_{N,dc} \cong 1$ (voltage follower).

*Optional problem.

8.38 A Type 13741 internally compensated FET-input operational amplifier is characterized by $A_{dc} = 100{,}000$, $f_1 = 10$ Hz, and $f_2 = 1$ MHz, and it is used with frequency-independent feedback.

(a) Show that the magnitude of the frequency response is free of peaking if, and only if, $M_{N,dc} \geqslant 2$.

(b) Show that the transient response is free of ringing if, and only if, $M_{N,dc} \geqslant 4$.

8.39 Derive Equations 8.51a–e from Equation 8.50.

***8.40** Derive Equation 8.53 from Equations 8.51a and 8.52 for a step-function input, using Appendix A.

8.41 Derive the equation for V_{out} in Example 8.14 from Equation 8.53.

***8.42** Verify that the bandwidth approximations given in the text following Example 8.14 are valid for frequency-independent feedback *and* for lead–lag compensation with $f_L = f_2$ (pole-zero cancellation). Ignore the region of $m \gg 1$ and show the following:

(a) The bandwidth is approximately $f_1 A_{dc}/M_{N,dc}$ when $m \leqslant 1$.

(b) The bandwidth is approximately $\sqrt{(A_{dc}/M_{N,dc})f_1 f_2}$ when $m \geqslant 1$ (but *not* when $m \gg 1$). [*Hint:* Use the piecewise linear approximations of the Bode plots for $|M_N|$.]

***8.43** Show that the approximate bandwidth given in (b) of Problem 8.42 is also applicable for $0.5 \leqslant m \leqslant 1$. [*Hint:* Use the results of Figure 6.13.]

8.44 Verify the results of Example 8.16.

8.45 A Type 13741 internally compensated FET-input operational amplifier is characterized by $A_{dc} = 100{,}000$, $f_1 = 10$ Hz, and $f_2 = 1$ MHz. It is used in a noninverting feedback amplifier with $F_N = F_{N,dc} = 1$ (voltage follower). Find the resulting value of m and estimate the bandwidth of the feedback amplifier.

8.46 Use Equation 8.49 and show that the piecewise linear approximation of the Bode plot of $|AF_N|$ becomes 1 at f_C given by Equation 8.57a when $f_2 \leqslant f_C$, $f_L \leqslant f_C$, and $f_U \geqslant f_C$. Assume $A_{dc}F_{N,dc} \gg 1$.

8.47 Verify Equations 8.59a–d and Equation 8.60.

***8.48** Consider the procedure given in Appendix A for the solution of third-order (cubic) equations. Verify that the case of $\tau_D = \tau_A$ in Equation 8.61 marks the transition between two regions: All three of τ_A, τ_B, and τ_D are real in one region, whereas in the other region only one of τ_A, τ_B, and τ_D is real and the remaining two are complex. Assume nonzero s, τ_A, τ_B, τ_C, and τ_D.

8.49 Verify Equations 8.62b, 8.63a, 8.63b, and 8.63c.

*Optional problem.

*8.50 Derive Equations 8.64a–c from Equations 8.63a–c as follows:
(a) Express τ_C/τ_B from Equation 8.63a; the result is Equation 8.64c.
(b) Substitute the result of (a) above (i.e., Equation 8.64c) into Equation 8.63c.
(c) Obtain Equation 8.64b from the result of (b) above.
(d) Substitute the result of (a) above (i.e., Equation 8.64c) and the result of (c) above (i.e., Equation 8.64b) into Equation 8.63b. Simplify and express w_1; the result is Equation 8.64a.

8.51 Compute Equations 8.64a and 8.64b with $R = 0.625$ and $\tau_C/\tau_A = 1.44$. Verify that the results are consistent with Figure 8.9.

*8.52 Derive Equation 8.65 by substituting τ_C/τ_B of Equation 8.64c into Equation 8.63b and solving the resulting equation for τ_C/τ_A.

8.53 Show that lead–lag compensation with $f_L = f_2$ (pole-zero cancellation) would require $f_U/f_L = 20$ in Example 8.17, which cannot be implemented because $M_{N,dc}$ is only 10.

8.54 Derive Equation 8.66 from Equation 8.62a. [*Hint:* Use Equations 8.59d and 8.63c.]

8.55 Verify Equation 8.67b.

8.56 Verify the equation for $V_{out}(t)$ in Example 8.18.

8.57 Verify Equations 8.68a and 8.68b.

8.58 Verify Equations 8.69a–c.

*8.59 Derive Equations 8.70a–c from Equations 8.69a–c as follows:
(a) Express R/w_1 from Equation 8.69a and substitute it into Equation 8.69b.
(b) Express w_2 from the result of (a) above. The result is Equation 8.70a.
(c) Express w_1 from Equation 8.69c. The result is Equation 8.70b.
(d) Express R from Equation 8.69a. The result is Equation 8.70c.

8.60 Verify that w_1 and w_2 of Figure 8.12 provide the locations of the cusps for $R = 0$, 0.1, 0.2, 0.5, 0.625, and 0.75 in Figure 8.9.

8.61 Compute Equations 8.70a–c at $\tau_C/\tau_A = 1.2$. Verify that the results are consistent with Figure 8.12.

8.62 Verify Equations 8.71a and 8.71b.

8.63 Verify the results of Example 8.19.

8.64 Derive Equation 8.72 from Equation 8.68a. [*Hint:* Use Equations 8.59d and 8.63c with $\tau_B = \tau_A$.]

*Optional problem.

8.65 Derive Equation 8.73b from Equation 8.73a using Appendix A.

8.66 Verify the equation for $V_{out}(t)$ in Example 8.20.

8.67 Verify the results of Example 8.21.

8.68 Show that $1/(R^2/w_1)$ is equal to the piecewise linear approximation of the Bode plot for $|AF_N|$ at $f = f_2$:
(a) in Figure 8.10;
(b) in Figure 8.13;
(c) in general when $f_L \geqslant f_2$ and $f_U \geqslant f_2$.

8.69 A Type 9914A wideband hybrid operational amplifier is characterized by $A_{dc} = 5000$, $f_1 = 0.5$ MHz, and $f_2 = 50$ MHz. It is used in a noninverting feedback amplifier with $M_{N,dc} = 50$, and a transient response without ringing is desired. Input voltage $V_{in}(t)$ is a step function with magnitude V_0.
(a) Find output voltage $V_{out}(t)$ if lead–lag compensation with $f_L = f_2$ and $m = 0.25$ is used.
(b) Find t_{50} and t_{10-90} of (a) above.
(c) Find output voltage $V_{out}(t)$ if lead–lag compensation with $f_L > f_2$ is used and if the transfer function is of the form of Equation 8.72.
(d) Find t_{50} and t_{10-90} of (c) above.

8.70 Verify the results of Example 8.22.

8.71 Verify Equations 8.74a–d and 8.75a–d.

8.72 Verify the statements following Equation 8.75d by the steps given below:
(a) Show that Equation 8.49 can also be written

$$\frac{\mathscr{L}\{V_{out}(t)\}}{\mathscr{L}\{V_{in}(t)\}} = \frac{A_{dc}(1 + s\tau_U)}{(1 + s\tau_1)(1 + s\tau_U)(1 + s\tau_2) + A_{dc}F_{N,dc}(1 + s\tau_L)}.$$

(b) Show that when $A_{dc}F_{N,dc} \gg 1$, the result of (a) above can be written

$$\frac{\mathscr{L}\{V_{out}(t)\}}{\mathscr{L}\{V_{in}(t)\}} = M_{N,dc}\frac{1 + s\tau_U}{1 + s\tau_L + \dfrac{M_{N,dc}}{A_{dc}}(1 + s\tau_1)(1 + s\tau_U)(1 + s\tau_2)}.$$

(c) Verify that the denominator of Equation 8.75c is identical to the denominator of the result of (b) above with τ_2, τ_L, and τ_U replaced by τ_L, τ_U, and τ_2, respectively.
(d) Verify that, in general, the numerators of Equations 8.75c and 8.75d are *not* identical to the numerator of the result of (b) above.

8.73 Verify the results of Example 8.25.

8.74 (a) Verify the equation given for $V_{out}(t)$ in Example 8.26.
(b) Evaluate the equation at $t = 1\ \mu s$ and compare the result with graph (*a*) of Figure 8.17.

8.75 Derive the equation representing graph (*b*) in Figure 8.17. Evaluate the equation at $t = 1\ \mu s$ and compare the result with the figure.

***8.76** Derive the equation representing graph (*c*) in Figure 8.17. Evaluate the equation at $t = 1\ \mu s$ and compare the result with the figure.

8.77 In Example 8.25, the value of C_I is 10 pF, which includes the input capacitance of the operational amplifier and stray capacitances. Show that a feedback network consisting of $R_F = 265\ k\Omega$ in parallel with $C_F = 4.6$ pF results in $f_U = 129.8$ kHz and $f_L = 41.1$ kHz, as required.

8.78 Sketch piecewise linear approximations of the Bode plots for $|A|$, $|1/F_N|$, and $|M_N|$ in Example 8.27. Use a logarithmic horizontal scale of 10 kHz to 1 GHz and a vertical scale of -20 dB to 100 dB.

8.79 Verify Equations 8.77 and 8.78a–c.

8.80 Use Equations 8.76 and 8.77, and show that f_C of Equation 8.78c is the frequency where the piecewise linear approximation of $|AF_N|$ becomes 1 when $f_2 \geqslant f_C$ and $f_3 \geqslant f_C$.

8.81 Verify Equations 8.79a–c and 8.80a–d.

***8.82** Derive Equation 8.82 from Equations 8.80a–d and 8.81a–c. [*Hint:* As a first step show that Equation 8.81a can be written

$$27\frac{w_{31}}{w_{21}}\left(\frac{1}{w_{21}}\right)^2 - \left(\frac{w_{31}}{w_{21}}+1\right)\left[18\frac{w_{31}}{w_{21}} - 4\left(\frac{w_{31}}{w_{21}}+1\right)^2\right]\left(\frac{1}{w_{21}}\right) - \frac{w_{31}}{w_{21}}\left(\frac{w_{31}}{w_{21}}-1\right)^2 \leqslant 0,$$

then solve for $1/w_{21}$.]

8.83 Show that w_{21} given by Equation 8.82 becomes $27/4 = 6.75$ when $w_{31} = w_{21}$. Verify Figure 8.18 at this point.

***8.84** Show that, based on previous results of this chapter, w_{21} of Equation 8.79b and Figure 8.18 is expected to become 4 when $w_3 \to \infty$ in Equation 8.79c (i.e., when $f_3 \to \infty$). Verify that Figure 8.18 is consistent with this result.

8.85 Show that w_{21} of Equation 8.82 becomes 4 when $w_{31}/w_{21} \to \infty$. [*Hint:* First show that $1/w_{21}$ can be approximated as

$$\frac{1}{w_{21}} \cong \frac{2(w_{31}/w_{21})^2}{27}\left[-1 + \sqrt{1 + \frac{27}{4(w_{31}/w_{21})^2}}\right],$$

then use the approximation $\sqrt{1+x} \cong 1 + x/2$ for $|x| \ll 1$.]

8.86 Evaluate Equation 8.82 and verify Figure 8.18 at $w_{31}/w_{21} = 0.2, 0.5, \frac{2}{3}, 1.5, 2$, and 5.

*Optional problem.

8.87 Verify the results of Examples 8.28 and 8.29.

8.88 A Type 2539 wideband monolithic operational amplifier is characterized by $A_{dc} = 30{,}000$, $f_1 = 20$ kHz, and $f_2 = f_3 = 300$ MHz. The operational amplifier is used in a noninverting feedback amplifier with frequency-independent feedback. Show that the transient response is free of ringing if, and only if, the resulting dc amplification, $M_{N,dc}$, is at least $\approx 27/2 = 13.5$.

8.89 Verify Equations 8.83 and 8.84.

8.90 Verify the results of Example 8.30.

8.91 Evaluate Equation 8.81a for Example 8.30 and show that the right side of Equation 8.81a is greater by roughly 1.5% than its left side.

8.92 Verify the results of Example 8.31.

***8.93** The end result of Example 8.31 was reached by approximating by 1 the transfer function $[1 + s(0.215\text{ ns})]/[1 + s(0.205\text{ ns})]$. Show that the transient response corresponding to this transfer function multiplied by $1/s$ is $1 + 0.05\,e^{-t/0.205\text{ ns}}$, which can be approximated by 1 with an error of less than 2% for times greater than 0.2 ns.

8.94 Verify the results of Example 8.32.

8.95. The results of Section 8.4.3.2 are expected to reduce to those of Section 8.3.2.2 when $f_3 \gg f_2$. Verify that this indeed is the case in Figure 8.22.

8.96 Verify that the $R = 0$ limits of Figures 8.23–8.25 are consistent with Figure 8.22.

***8.97** Derive the results of Figures 8.21 and 8.22 as follows:

(a) Show that the fourth-order equation to be solved can be written

$$\frac{s^4}{s_C^4} + \frac{s^3}{s_C^3}w_2\left(1 + \frac{f_3}{f_2}\right) + \frac{s^2}{s_C^2}w_2^2\frac{f_3}{f_2} + \frac{s}{s_C}w_2^2\frac{f_3}{f_2} + \frac{w_2^2}{w_1}\frac{f_3}{f_2} = 0.$$

(b) Show that the expression $(s + s_A)^2(s + s_B)(s + s_D)$ can also be written

$$s^4 + s^3(2s_A + s_B + s_D) + s^2[s_A^2 + 2s_A(s_B + s_D) + s_Bs_D] + ss_A[s_A(s_B + s_D) + 2s_Bs_D] + s_A^2s_Bs_D.$$

(c) Multiply the equation in (a) by s_C^4 and match the coefficients of the result with the coefficients of (b).

(d) Write the equation resulting from the s^3 terms of (a) and (b) as

$$\frac{s_B + s_D}{s_A} = \left(1 + \frac{f_3}{f_2}\right)\frac{s_C}{s_A}w_2 - 2.$$

*Optional problem.

(e) Write the equation resulting from the s terms of (a) and (b) as

$$\frac{f_3}{f_2}\left(\frac{s_C}{s_A}w_2\right)^2 = \frac{s_A}{s_C}\left(\frac{s_B+s_D}{s_A} + 2\frac{s_B s_D}{s_A^2}\right).$$

(f) Combine the equations resulting from the s^3 and s^2 terms of (a) and (b) as

$$\frac{s_B s_D}{s_A^2} = \frac{f_3}{f_2}\left(\frac{s_C}{s_A}w_2\right)^2 - 2\left(1+\frac{f_3}{f_2}\right)\frac{s_C}{s_A}w_2 + 3.$$

(g) Write the equations resulting from the constant terms of (a) and (b) as

$$\frac{f_3}{f_2}\left(\frac{s_C}{s_A}w_2\right)^2\left(\frac{s_C}{s_A}\right)^2\frac{1}{w_1} = \frac{s_B s_D}{s_A^2}.$$

(h) Combine the results of (f) and (g) and express w_1 as

$$w_1 = \frac{f_3}{f_2}\left(\frac{s_C}{s_A}\right)^2 \frac{\left(\frac{s_C}{s_A}w_2\right)^2}{\frac{f_3}{f_2}\left(\frac{s_C}{s_A}w_2\right)^2 - 2\left(1+\frac{f_3}{f_2}\right)\frac{s_C}{s_A}w_2 + 3}.$$

(i) Substitute the results of (d) and (f) into (e) and express s_A/s_C as

$$\frac{s_A}{s_C} = \frac{\frac{f_3}{f_2}\left(\frac{s_C}{s_A}w_2\right)^2}{2\frac{f_3}{f_2}\left(\frac{s_C}{s_A}w_2\right)^2 - 3\left(1+\frac{f_3}{f_2}\right)\frac{s_C}{s_A}w_2 + 4}.$$

(j) Multiply the result of (i) by $(s_C/s_A)w_2$ to obtain w_2 as

$$w_2 = \frac{\frac{f_3}{f_2}\left(\frac{s_C}{s_A}w_2\right)^3}{2\frac{f_3}{f_2}\left(\frac{s_C}{s_A}w_2\right)^2 - 3\left(1+\frac{f_3}{f_2}\right)\frac{s_C}{s_A}w_2 + 4}.$$

(k) Evaluate the results of (h) and (j) for $f_3/f_2 = 2$ and $(s_C/s_A)w_2 = 2.5$. Verify that the results are consistent with Figure 8.21. Repeat for $f_3/f_2 = 5$ and $(s_C/s_A)w_2 = 2.3$.

***8.98** Derive the results of Figures 8.23–8.25 as follows:

(a) Show that the fourth-order equation to be solved can be written

$$\frac{s^4}{s_C^4} + \frac{s^3}{s_C^3}\left[w_2\left(1+\frac{f_3}{f_2}\right) + \frac{R}{w_1}\right] + \frac{s^2}{s_C^2}w_2\left[w_2\frac{f_3}{f_2} + \frac{R}{w_1}\left(1+\frac{f_3}{f_2}\right)\right] + \frac{s}{s_C}w_2^2\frac{f_3}{f_2}\left(1+\frac{R}{w_1}\right) + \frac{w_2^2}{w_1}\frac{f_3}{f_2} = 0.$$

*Optional problem.

(b) Show that the expression $(s+s_A)^3(s+s_B)$ can also be written

$$s^4 + s^3(3s_A + s_B) + s^2 3s_A(s_A + s_B) + ss_A^2(s_A + 3s_B) + s_A^3 s_B.$$

(c) Multiply the equation in (a) by s_C^4 and match the coefficients of the result with the coefficients of (b).

(d) Combine the equations resulting from the s^3 and s^2 terms of (a) and (b) as

$$\frac{s_C}{s_A}\frac{R}{w_1} = \frac{\frac{f_3}{f_2}\left(\frac{s_C}{s_A}w_2\right)^2 - 3\left(1+\frac{f_3}{f_2}\right)\left(\frac{s_C}{s_A}w_2\right) + 6}{3 - \left(1+\frac{f_3}{f_2}\right)\left(\frac{s_C}{s_A}w_2\right)}.$$

[*Hint:* Express s_B from the equation resulting from the s^3 terms and substitute it into the equation resulting from the s^2 terms.]

(e) Rearrange the equation resulting from the s^2 terms of (a) and (b) as

$$\frac{s_A}{s_C} = \frac{\frac{f_3}{f_2}\left(\frac{s_C}{s_A}w_2\right)^2}{3\left(1+\frac{f_3}{f_2}\right)\left(\frac{s_C}{s_A}w_2\right) - 8 - \left[\frac{f_3}{f_2}\left(\frac{s_C}{s_A}w_2\right)^2 - 3\right]\frac{s_C}{s_A}\frac{R}{w_1}}.$$

(f) Multiply the result of (d) with the result of (e) and obtain R/w_1.

(g) Combine the equations resulting from the s^3 terms and the constant terms of (a) and (b) such as to eliminate s_B. Write the result as

$$R = \frac{f_3}{f_2}\left(\frac{s_C}{s_A}w_2\right)^2\frac{s_C}{s_A}\frac{R}{w_1}\frac{1}{\frac{s_A}{s_C}\left[\left(1+\frac{f_3}{f_2}\right)\left(\frac{s_C}{s_A}w_2\right) - 3\right] + \frac{R}{w_1}}.$$

(h) Divide the result of (g) by the result of (f) to obtain w_1.

(i) Multiply the result of (e) by $(s_C/s_A)w_2$ to obtain w_2.

(j) Express s_B/s_C from the equation resulting from the s^3 terms of (a) and (b) as

$$\frac{s_B}{s_C} = \frac{s_A}{s_C}\left[\left(1+\frac{f_3}{f_2}\right)\frac{s_C}{s_A}w_2 - 3\right] + \frac{R}{w_1}.$$

(k) Note that $\tau_C/\tau_A = s_A/s_C$ and $\tau_C/\tau_B = s_B/s_C$.

(l) Evaluate the results of (d)–(k) above, in the order given, for $f_3/f_2 = 1$ and $(s_C/s_A)w_2 = 4$. Verify that the results are consistent with Figure 8.23. Repeat for $f_3/f_2 = 1$ and $(s_C/s_A)w_2 = 4.5$.

(m) Evaluate the results of (d)–(k) above, in the order given, for $f_3/f_2 = 2$ and $(s_C/s_A)w_2 = 3$. Verify that the results are consistent with Figure 8.24. Repeat for $f_3/f_2 = 2$ and $(s_C/s_A)w_2 = 3.5$.

(n) Evaluate the results of (d)–(k) above, in the order given, for $f_3/f_2 = 5$ and $(s_C/s_A)w_2 = 3$. Verify that the results are consistent with Figure 8.25.

8.99 Verify the results of Example 8.33.

***8.100** Verify Figure 8.26 as follows:

(a) Verify that for any a, b, and s,

$$\frac{1}{(s-a)^3(s-b)} = \frac{1}{(a-b)}\frac{1}{(s-a)^3} - \frac{1}{(a-b)^2}\frac{1}{(s-a)^2} + \frac{1}{(a-b)^3}\frac{1}{(s-a)} - \frac{1}{(a-b)^3}\frac{1}{(s-b)}.$$

(b) Use the result of (a) above and show that in Example 8.34

$$\frac{V_{out}(t)}{V_0} = 1 - e^{-t/\tau_A}\left[\frac{1}{1-\frac{\tau_B}{\tau_A}} - \frac{\tau_B}{\tau_A}\frac{1}{\left(1-\frac{\tau_B}{\tau_A}\right)^2} + \left(\frac{\tau_B}{\tau_A}\right)^2\frac{1}{\left(1-\frac{\tau_B}{\tau_A}\right)^3}\right]$$
$$+ e^{-t/\tau_B}\left(\frac{\tau_B}{\tau_A}\right)^3\frac{1}{\left(1-\frac{\tau_B}{\tau_A}\right)^3} - \frac{t}{\tau_A}e^{-t/\tau_A}\left[\frac{1}{1-\frac{\tau_B}{\tau_A}} - \frac{\tau_B}{\tau_A}\frac{1}{\left(1-\frac{\tau_B}{\tau_A}\right)^2}\right]$$
$$-\frac{1}{2}\left(\frac{t}{\tau_A}\right)^2 e^{-t/\tau_A}\frac{1}{1-\frac{\tau_B}{\tau_A}}.$$

[*Hint:* Use Laplace transforms from Appendix A.]

(c) Evaluate $V_{out}(t)$ at $t = 5$ ns and 10 ns, and show that the resulting values of $V_{out}(t)$ are consistent with Figure 8.26.

***8.101** Equation 7.76 and Figure 7.6 describe feedback factor AF_N of a feedback amplifier in the vicinity of frequency $f = f_C$, where $|AF_N| = 1$ at $f = f_C$.

(a) Show analytically that the denominator of the resulting amplification M_N can be written $(1 + s\tau_C)^3$ when $w = 3$, where time constant $\tau_C = 1/2\pi f_C$.

(b) Sketch a piecewise linear approximation for the Bode plot of $|AF_N|$ for the feedback amplifier of Figure 8.12 with $R = 0$.

(c) Compare the plot of (b) above with Figure 7.6, and show that the results of (a) above provide an analytical verification of Figure 8.12 with $R = 0$.

*Optional problem.

***8.102** Equation 7.54 and Figure 7.5 describe feedback factor AF_N of a conditionally stable feedback amplifier in the vicinity of frequency $f = f_C$, where $|AF_N| = 1$ at $f = f_C$. Show analytically that the denominator of the resulting amplification M_N can be written $(1 + s\tau_C)^5$ when $w = 5$, where time constant $\tau_C = 1/2\pi f_C$. (Note: Although straightforward, working this problem is time-consuming because of the many terms involved.)

*Optional problem.

CHAPTER 9

Properties of Real Operational Amplifiers, Part I

In the preceding, ideal operational amplifiers were assumed in accordance with Equations 2.1 and 2.2. In the case of a real operational amplifier, however, these equations can be considered only as approximations. In this chapter and in Chapter 10, departures of real operational amplifiers from Equations 2.1 and 2.2 are discussed.

9.1 Common-Mode Amplification and Common-Mode Rejection

Consider the circuit of Figure 9.1. If the amplifier is ideal, the output voltage is given by

$$V_{out} = AV_d \tag{9.1}$$

and voltage V_c has no effect whatsoever on the output voltage.

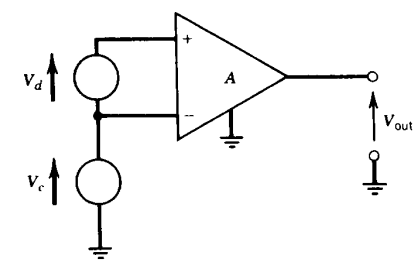

FIGURE 9.1 Circuit for determining the common-mode rejection of an operational amplifier.

In reality, a small fraction of V_c finds its way to the output; that is,

$$V_{out} = AV_d + A_{CM}V_c, \tag{9.2}$$

where A_{CM} is designated *common-mode amplification*. In the case of a real operational amplifier, $A_{CM} \neq 0$, but usually its magnitude is much smaller than that of A:

$$|A_{CM}| \ll |A|. \tag{9.3}$$

The output voltage of the amplifier, V_{out}, can be approximated as

$$V_{out} = D_dV_d + D_c(V_c + V_d/2) + K, \tag{9.4a}$$

where D_d, D_c, and K are constants (in general, D_d and D_c are the partial derivatives of V_{out} with respect to V_d and V_c, respectively). Note that the second term in Equation 9.4a is the constant D_c multiplied by the average of the voltages at the positive (+) and negative (−) input terminals of the operational amplifier. With the foregoing, the *common-mode rejection ratio* (*CMRR*) is defined as

$$\text{CMRR} \equiv -20\,\text{dB}\,\log_{10}\left|\frac{D_c}{D_d}\right| = 20\,\text{dB}\,\log_{10}\left|\frac{D_d}{D_c}\right|. \tag{9.4b}$$

It can be seen that for an ideal operational amplifier, that is, for $D_c = 0$, the common-mode rejection ratio is CMRR = ∞. For the circuit of Figure 9.1, $D_c = A_{CM}$ and $D_d = A$; hence, Equation 9.4b becomes

$$\text{CMRR} = -20\,\text{dB}\,\log_{10}\left|\frac{A_{CM}}{A}\right| = 20\,\text{dB}\,\log_{10}\left|\frac{A}{A_{CM}}\right|. \tag{9.5}$$

In many cases, it is of interest to specify CMRR as a function of frequency. In general, the common-mode rejection ratio is best (CMRR the largest in magnitude) at dc, that is, at zero frequency, where

$$\text{CMRR}_{f=0} = 20\,\text{dB}\,\log_{10}\left|\frac{A_{f=0}}{A_{CM_{f=0}}}\right| = 20\,\text{dB}\,\log_{10}\left|\frac{A_{dc}}{A_{CM_{f=0}}}\right|, \tag{9.6}$$

designated as *dc common-mode rejection ratio*, or in many instances simply as common-mode rejection ratio.

EXAMPLE 9.1. An operational amplifier is characterized by an amplification at zero frequency of $A_{dc} = 4000$ and by a common-mode amplification at zero frequency of $|A_{CM}| = 0.04$. Thus, at zero frequency $|A_{CM}/A| = 0.04/4000 = 10^{-5}$, and the dc common-mode rejection ratio becomes

$$\text{CMRR}_{f=0} = -20\,\text{dB}\,\log_{10}(10^{-5}) = 20\,\text{dB}\,\log_{10}(10^5) = 100\,\text{dB}.$$

For many operational amplifiers, the common-mode rejection ratio as a function of frequency can be approximated as

$$\begin{aligned}\text{CMRR}(f) &\approx 20\,\text{dB}\,\log_{10}\left|\frac{A_{dc}}{(1 + jf/f_{CM})A_{CM_{f=0}}}\right| \\ &= 20\,\text{dB}\,\log_{10}\left|\frac{A_{dc}}{A_{CM_{f=0}}}\right| - 20\,\text{dB}\,\log_{10}\left|1 + \frac{jf}{f_{CM}}\right| \\ &= \text{CMRR}_{f=0} - 20\,\text{dB}\,\log_{10}\sqrt{1 + \left(\frac{f}{f_{CM}}\right)^2},\end{aligned} \tag{9.7}$$

where f_{CM} is the corner frequency of the common-mode rejection ratio.

EXAMPLE 9.2. An operational amplifier has a dc common-mode rejection ratio of 95 dB. When driven from a zero-impedance source, as in Figure 9.1, the corner frequency of the common-mode rejection ratio is $f_{CM} = 0.5$ MHz. By use of Equation 9.7, the common-mode rejection ratio as a function of frequency becomes

$$\begin{aligned}\text{CMRR}(f) &= \text{CMRR}_{f=0} - 20\,\text{dB}\,\log_{10}\sqrt{1 + \left(\frac{f}{f_{CM}}\right)^2} \\ &= 95\,\text{dB} - 20\,\text{dB}\,\log_{10}\sqrt{1 + \left(\frac{f}{0.5\,\text{MHz}}\right)^2}.\end{aligned}$$

Thus, for example, at a frequency $f = 2$ MHz,

$$\begin{aligned}\text{CMRR}_{f=2\,\text{MHz}} &= 95\,\text{dB} - 20\,\text{dB}\,\log_{10}\sqrt{1 + \left(\frac{2\,\text{MHz}}{0.5\,\text{MHz}}\right)^2} \\ &= 95\,\text{dB} - 12.3\,\text{dB} = 82.7\,\text{dB}.\end{aligned}$$

It is of importance to determine the common-mode rejection properties of feedback amplifiers, in particular those of the differential feedback amplifier with equalized amplifications (Figure 3.4). If the operational amplifier is ideal, that is, if $A_{CM} = 0$, then the circuit, shown again in Figure 9.2*a*, has an output voltage (see Equation 3.26)

$$V_{out} = \frac{A}{1 + \dfrac{R_S}{R_P} + A\dfrac{R_I}{R_F}\left(1 + \dfrac{R_S}{R_P}\right)\Big/\left(1 + \dfrac{R_I}{R_F}\right)}(V_d + V_c) - \frac{A}{1 + \dfrac{R_I}{R_F} + A\dfrac{R_I}{R_F}}V_c. \tag{9.8}$$

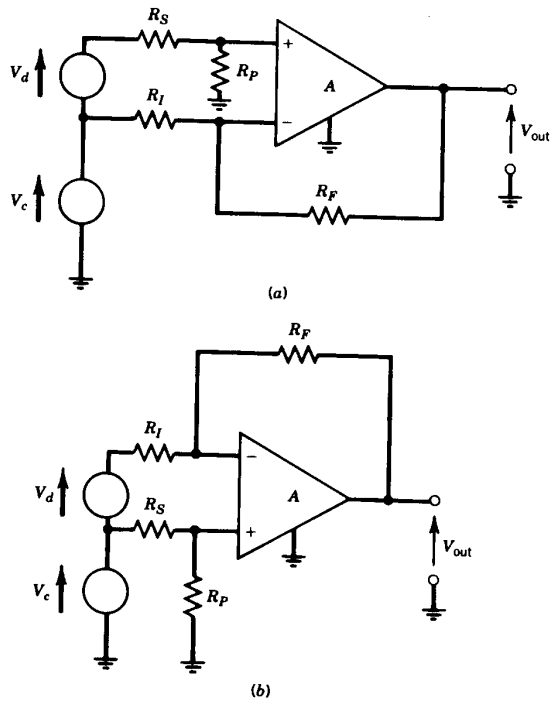

FIGURE 9.2 Two equivalent circuits for determining the common-mode rejection of a differential amplifier with feedback.

It can be shown that, if $A_{CM} \neq 0$, the output voltage in Figure 9.2*a* is given by

$$V_{out} = \frac{A}{1 + \dfrac{R_S}{R_P} + A\dfrac{R_I}{R_F}\left(1 + \dfrac{R_S}{R_P}\right)\Big/\left(1 + \dfrac{R_I}{R_F}\right)}(V_d + V_c)$$

$$- \frac{A}{1 + \dfrac{R_I}{R_F} + A\dfrac{R_I}{R_F}} V_c + \frac{A_{CM}}{1 + \dfrac{R_I}{R_F} + A\dfrac{R_I}{R_F}} \frac{1 + \dfrac{R_I}{R_F}}{1 + \dfrac{R_S}{R_P}} V_c, \tag{9.9}$$

provided that Equation 9.3 is valid and that $|(1 + R_S/R_P)/(1 + R_I/R_F) - 1| \ll A$. Equation 9.9 is now evaluated for several cases.

If $R_S/R_P = R_I/R_F$ and $A_{CM} = 0$, Equation 9.9 becomes

$$V_{out} = \frac{A}{1 + \dfrac{R_I}{R_F} + A\dfrac{R_I}{R_F}} V_d, \tag{9.10}$$

and the common-mode rejection ratio of the circuit is CMRR = ∞.

If $R_S/R_P = R_I/R_F$, but $A_{CM} \neq 0$, Equation 9.9 becomes

$$V_{out} = \frac{AV_d + A_{CM}V_c}{1 + \dfrac{R_I}{R_F} + A\dfrac{R_I}{R_F}}, \tag{9.11}$$

and the common-mode rejection ratio of the circuit, by use of Equation 9.4b, is

$$\text{CMRR} = -20\,\text{dB}\log_{10}\left|\frac{A_{CM}}{A}\right| = 20\,\text{dB}\log_{10}\left|\frac{A}{A_{CM}}\right|, \tag{9.12}$$

the same as that of an amplifier without feedback. Thus, if the resistors are perfectly balanced, the feedback has no effect on the common-mode rejection ratio.

If $A_{CM} = 0$ but $R_S/R_p \neq R_I/R_F$, it can be shown by use of Equations 9.4b and 9.8 that the common-mode rejection ratio of the circuit is

$$\begin{aligned}\text{CMRR} &= -20\,\text{dB}\log_{10}\left|\left(1 - \frac{R_S}{R_P}\frac{R_F}{R_I}\right)\Big/\left(1 + \frac{R_F}{R_I}\right)\right| \\ &= 20\,\text{dB}\log_{10}\left|\left(1 + \frac{R_F}{R_I}\right)\Big/\left(1 - \frac{R_S}{R_P}\frac{R_F}{R_I}\right)\right|.\end{aligned} \tag{9.13}$$

In the case when $A_{CM} \neq 0$ and $R_S/R_P \neq R_I/R_F$, but

$$\left|\frac{R_S/R_P - R_I/R_F}{R_S/R_P + R_I/R_F}\right| \ll 1,$$

by use of Equations 9.4b and 9.9, the *worst-case limit of CMRR* can be given as

$$\text{CMRR} \geqslant -20\,\text{dB}\log_{10}\left[\left|\frac{A_{CM}}{A}\right| + \left|\left(1 - \frac{R_S}{R_P}\frac{R_F}{R_I}\right)\Big/\left(1 + \frac{R_F}{R_I}\right)\right|\right].^{*} \tag{9.14}$$

*It would seem that, based on Equation 9.9, a nonzero A_{CM} could be compensated by a suitable choice of parameters. Unfortunately, as a rule, only the magnitude of A_{CM} is known; hence, only the worst-case limit of the common-mode rejection ratio can be determined.

EXAMPLE 9.3. An operational amplifier with a common-mode rejection ratio of CMRR = 80 dB is used in the circuit of Figure 9.2*a*. Nominally, $R_I = R_S = 1000\,\Omega$ and $R_F = R_P = 10{,}000\,\Omega$, but all four resistors have a $\pm 0.1\,\%$ tolerance. By use of Equation 9.5,

$$\left|\frac{A_{CM}}{A}\right| = 10^{-\mathrm{CMRR}/20\,\mathrm{dB}} = 10^{-80\,\mathrm{dB}/20\,\mathrm{dB}} = 10^{-4}.$$

The worst-case limit of CMRR, from Equation 9.14, is given by

$$\begin{aligned}\mathrm{CMRR} &\geqslant -20\,\mathrm{dB}\log_{10}\left[\left|\frac{A_{CM}}{A}\right| + \left|\left(1 - \frac{R_S}{R_P}\frac{R_F}{R_I}\right)\Big/\left(1 + \frac{R_F}{R_I}\right)\right|\right] \\ &= -20\,\mathrm{dB}\log_{10}\left[10^{-4} + \left|\left(1 - \frac{1001}{9990}\frac{10{,}010}{999}\right)\Big/\left(1 + \frac{10{,}010}{999}\right)\right|\right] \\ &= -20\,\mathrm{dB}\log_{10}(10^{-4} + 3.6 \times 10^{-4}) = 66.7\,\mathrm{dB}.\end{aligned}$$

9.2 Input Impedances

In the case of a real operational amplifier, input currents I_p and I_n of Figure 2.1 are different from zero. Two approximately equivalent representations of the input terminals of a real operational amplifier are shown in Figure 9.3. Input current I_p can be decomposed into a voltage-independent $I_{p,0}$ and a voltage-dependent component. Input current I_n can also be decomposed into a voltage-independent $I_{n,0}$ and a voltage-dependent component. In this section, the voltage-dependent components of the input currents are discussed, whereas $I_{p,0}$ and $I_{n,0}$ will be discussed in Chapter 10.

The *differential input impedance* of an operational amplifier represented by Figure 9.3 can be defined as

$$Z_d \equiv \frac{\partial V_d}{\partial I_p}, \tag{9.15}$$

and the *common-mode input impedance* as

$$Z_c \equiv \frac{\partial V_c}{\partial (I_p + I_n)}. \tag{9.16}$$

EXAMPLE 9.4. At zero frequency, an operational amplifier has a differential input impedance of $7000\,\Omega$ and a common-mode input impedance of $1\,\mathrm{M}\Omega$. Thus, in Figure 9.3, $R_d = 7000\,\Omega$ and $R_c = 1\,\mathrm{M}\Omega$. It might also be useful to separate capacitances C_d and C_c of Figure 9.3; unfortunately, such a separation is rarely specified on present-day data sheets of operational amplifiers.

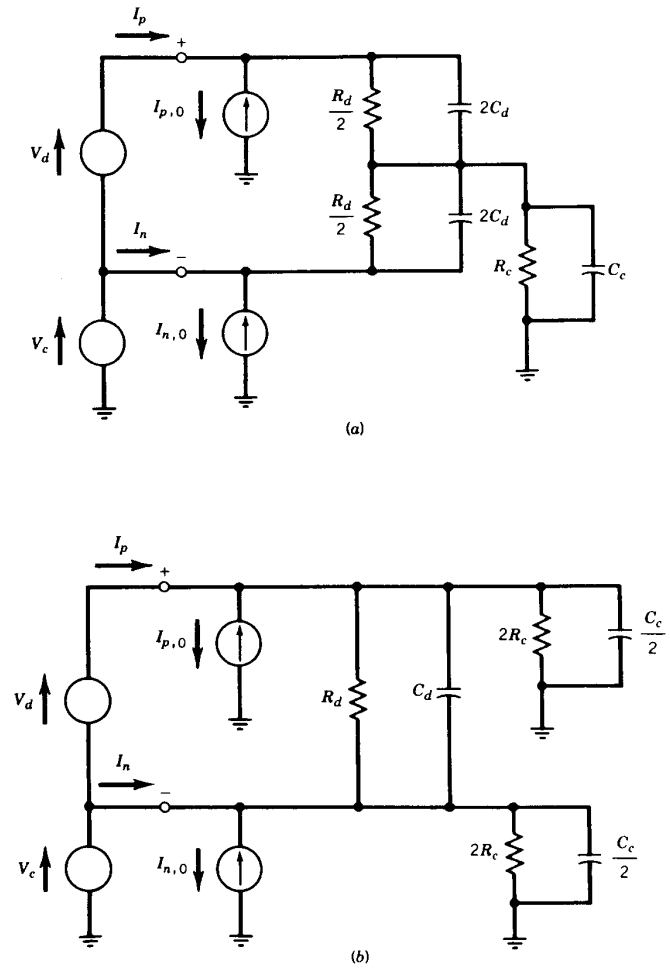

FIGURE 9.3 Two representations of the input terminals of an operational amplifier that are equivalent if $R_d \ll R_c$ and $C_d \gg C_c$.

It is of significant interest to investigate the input impedance of feedback amplifiers. The noninverting feedback amplifier of Figure 3.1 with the input of the operational amplifier represented by Figure 9.3*b* is shown in Figure 9.4. It can be shown that for $2R_c \gg R_I R_F/(R_I + R_F)$, the resulting input impedance at zero frequency, R_{in}, can be approximated as

$$R_{in} \equiv \left(\frac{\partial V_{in}}{\partial I_p}\right)_{f=0} = \frac{1}{\dfrac{1}{2R_c} + \dfrac{1}{\dfrac{R_I R_F}{R_I + R_F} + R_d \dfrac{A_{dc}}{M_{dc}}}}, \tag{9.17}$$

where M_{dc} is the resulting dc amplification of the feedback amplifier as given by M_N of Equation 3.6 with F_N that of Equation 3.2.

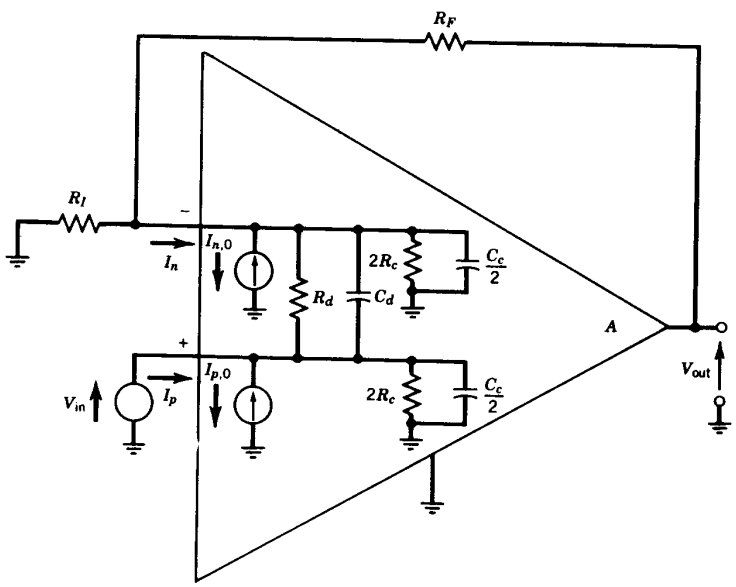

FIGURE 9.4 The noninverting feedback amplifier of Figure 3.1 with the input of the operational amplifier represented by the circuit of Figure 9.3*b*.

EXAMPLE 9.5. An operational amplifier with $R_d = 7000\,\Omega$, $R_c = 1\,\text{M}\Omega$, and $A_{dc} = 1000$ is used as a noninverting feedback amplifier with $R_I = 1000\,\Omega$ and $R_F = 9000\,\Omega$. Thus,

$$M_{dc} = \frac{A_{dc}}{1 + \dfrac{A_{dc}R_I}{R_I + R_F}} = \frac{1000}{1 + \dfrac{(1000)(1000\,\Omega)}{1000\,\Omega + 9000\,\Omega}} \approx 10,$$

and $A_{dc}/M_{dc} \approx 1000/10 \approx 100$. From Equation 9.17, the input impedance at zero frequency is

$$R_{in} = \left[\frac{1}{2(10^6\,\Omega)} + \frac{1}{\dfrac{(1000\,\Omega)(9000\,\Omega)}{1000\,\Omega + 9000\,\Omega} + (7000\,\Omega)(100)}\right]^{-1} = 0.52\,\text{M}\Omega.$$

9.3 Output Impedance

In the case of an ideal operational amplifier, Equation 2.1 states that the output voltage is determined by the input voltages and is independent of the output current. In reality, the output voltage is a function of the output current; that is, in Figure 2.1,

$$Z_{out} \equiv -\frac{\partial V_{out}}{\partial I_{out}} \neq 0. \tag{9.18}$$

In general, *output impedance* Z_{out} is a function of frequency; in many cases, it can be represented as a resistance in series with an inductance.

EXAMPLE 9.6. The output impedance of an operational amplifier can be approximated by a resistance of $75\,\Omega$ in series with an inductance of $40\,\mu\text{H}$. Thus, $Z_{out}(f) = 75\,\Omega + j2\pi(40\,\mu\text{H})f$ and $|Z_{out}(f)| = \sqrt{75^2 + [2\pi(40 \times 10^{-6}f)]^2}$. For example, at a frequency of $f = 1\,\text{MHz}$,

$$|Z_{out}(f)| = \sqrt{75^2 + [2\pi(40 \times 10^{-6})(10^6)]^2} = 262\,\Omega.$$

When an operational amplifier with a nonzero output impedance is used in a feedback amplifier, Figure 9.5, the resulting output impedance of the circuit is a function of the output impedance Z_{out} of the operational amplifier, of amplification A of the operational amplifier, and of resistors R_I and R_F. It can be shown that the resulting output impedance of the feedback amplifier of Figure 9.5 is

$$\frac{\partial V_{out}}{\partial I_{load}} = \frac{Z_{out}}{1 + \left(A + \dfrac{Z_{out}}{R_I}\right)\dfrac{R_I}{R_I + R_F}}. \tag{9.19}$$

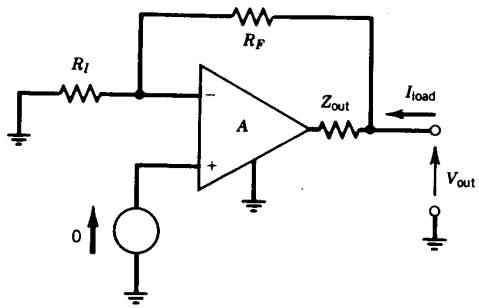

FIGURE 9.5 Circuit for determining the output impedance $\partial V_{out}/\partial I_{load}$ of a feedback amplifier.

If, as is the usual case,

$$\left|\frac{Z_{out}}{R_I}\right| \ll |A|, \tag{9.20}$$

Equation 9.19 becomes

$$\frac{\partial V_{out}}{\partial I_{load}} \approx \frac{Z_{out}}{1 + A\dfrac{R_I}{R_I + R_F}} = \frac{Z_{out}}{1 + AF_N} = Z_{out}\frac{M_N}{A}. \tag{9.21}$$

EXAMPLE 9.7. An operational amplifier with an output impedance $Z_{out}(f) = 75\,\Omega + j2\pi(40\,\mu H)f$ and an amplification $A \approx 200{,}000/(1 + jf/10\,Hz)$ is used in the circuit of Figure 9.5 with $R_I = 100\,\Omega$ and $R_F = 10{,}000\,\Omega$. Hence,

$$F_N = F_{N,dc} = \frac{R_I}{R_I + R_F} = \frac{100\,\Omega}{100\,\Omega + 10{,}000\,\Omega} \approx 0.01,$$

and the resulting amplification at zero frequency is

$$M_{dc} = \frac{A_{dc}}{1 + A_{dc}F_{N,dc}} = \frac{200{,}000}{1 + (200{,}000)(0.01)} \approx 100.$$

The resulting output impedance at zero frequency, by use of Equation 9.21, is

$$\left(\frac{\partial V_{out}}{\partial I_{load}}\right)_{f=0} = \left(Z_{out}\frac{M_N}{A}\right)_{f=0} = 75\,\Omega\,\frac{100}{200{,}000} = 0.0375\,\Omega.$$

9.4 Supply-Voltage Rejection

The output voltage of an ideal operational amplifier depends only on the input voltages and it is independent of the power supply voltage. In reality, the output voltage is a function of the power supply voltage, or supply voltages if there are more than one. It has been customary to define a *supply-voltage rejection ratio*, or *power supply rejection ratio, PSRR*, as

$$\text{PSRR} \equiv \left|\frac{1}{A_{dc}}\frac{\partial V_{out}}{\partial V_{supply}}\right|, \tag{9.22}$$

that is, as the ratio of the equivalent voltage change at the input of the amplifier to a change in supply voltage.*

EXAMPLE 9.8. The supply-voltage rejection ratio of an operational amplifier is $30\,\mu V/V = 30 \times 10^{-6}$, and its dc amplification is $A_{dc} = 200{,}000$. Thus, if there is a $\Delta V_{supply} = 10\,mV$ ripple on the power supply, this will be equivalent to a $(10\,mV)(30 \times 10^{-6}) = 0.3\,\mu V$ on the input of the amplifier. Thus, without feedback, the ripple voltage on the output $|\Delta V_{out}| = (0.3\,\mu V)(200{,}000) = 60\,mV$. This result can also be obtained directly by use of Equation 9.22:

$$|\Delta V_{out}| = \text{PSRR}|A_{dc}|\,|\Delta V_{supply}| = (30 \times 10^{-6})(200{,}000)(10\,mV) = 60\,mV.$$

In the case of an operational amplifier with negative feedback and a resulting amplification of M_N, it can be shown that the output voltage ΔV_{out} resulting from a supply-voltage change of ΔV_{supply} is given by

$$|\Delta V_{out}| = |\text{PSRR}(M_N)(\Delta V_{supply})|. \tag{9.23}$$

EXAMPLE 9.9. An operational amplifier has a supply-voltage rejection ratio of PSRR $= 30\,\mu V/V$ and a dc amplification of $A_{dc} = 200{,}000$. It is used as a feedback amplifier with a resulting feedback amplification of $M_N = 100$, and there is a $\Delta V_{supply} = 10\,mV$ ripple on the power supply voltage. As a result, by use of Equation 9.23, the ripple at the output of the amplifier is

$$|\Delta V_{out}| = |\text{PSRR}(M_N)(\Delta V_{supply})| = (30 \times 10^{-6})(100)(10\,mV) = 30\,\mu V.$$

In general, the supply-voltage rejection ratio, PSRR, is a function of frequency having, as a rule, its best (lowest) value at dc; this frequency dependence is also a function of the compensation scheme used. Unfortunately, information in present-day operational amplifier data sheets on the frequency dependence of the supply-voltage rejection ratio is very limited.

*Note that PSRR of Equation 9.22 is *referred to the input (RTI)*.

PROBLEMS

9.1 Common-mode rejection properties of an operational amplifier are measured in the circuit of Figure 9.1. At $V_c = 0$ and $V_d = 1$ mV, a $V_{out} = 5$ V is measured. At $V_c = 1$ mV and $V_d = 0$, a $V_{out} = -0.5$ mV is measured. Find A, $|A_{CM}|$, and the dc common-mode rejection ratio CMRR.

9.2 An operational amplifier has a dc common-mode rejection ratio of $\text{CMRR}_{f=0} = 90$ dB. At $f = 1$ MHz, $\text{CMRR}_{f=1\,\text{MHz}} = 16$ dB. Find corner frequency f_{CM} of the common-mode rejection ratio.

9.3 Show that the common-mode rejection ratio does not change if in the circuit of Figure 9.1 the positive and negative input terminals of the operational amplifier are interchanged.

9.4 Show that the common-mode rejection ratios of the circuits of Figures 9.2*a* and 9.2*b* are identical if the components are identical.

9.5 A Type 108A operational amplifier with a common-mode rejection ratio of CMRR = 96 dB is used in the circuit of Figure 9.2*a*. The useful signal is $V_d = 10\,\mu$V and the undesired noise is $V_c = 10$ mV. Find the ratio of the useful signal to the undesired noise at the output of the circuit.

9.6 Derive Equations 9.9–9.14.

9.7 Show that the worst-case limit of the common-mode rejection ratio of the compound differential amplifier of Figure 3.10 can be approximated as

$$\text{CMRR} = -20\,\text{dB}\log_{10}\left[\left|1-\left(1+\frac{R_I}{R_F}\right)\Big/\left(1+\frac{R_S}{R_P}\right)\right| + \left|1-\frac{A_2}{1+A_2}\,\frac{1+A_1}{A_1}\right|\right].$$

9.8 Derive Equation 9.17.

9.9 Estimate the input impedance seen at the positive input terminal of the circuit of Figure 3.1 with the voltage source removed, if the operational amplifier input terminals can be represented by the circuits of Figure 9.3 with $C_d = 10$ pF, $C_c = 1$ pF, $R_d = 10{,}000\,\Omega$, and $R_c = 1$ MΩ.

9.10 An operational amplifier with an output impedance consisting of a resistance of 75 Ω in series with an inductance of 40 μH has an amplification $A \approx 200{,}000/(1 + jf/10\,\text{Hz})$. Find the resulting output impedance at zero frequency and the magnitude of the resulting output impedance at a frequency $f = 1$ MHz if the operational amplifier is used as a voltage follower.

9.11 An operational amplifier has a dc amplification $A_{dc} = 4000$ and a supply-voltage rejection ratio PSRR = 75 μV/V. Find the ripple on the output, if the amplifier is used without feedback and if there is a ripple of 10 mV on the power supply voltage.

9.12 Derive Equation 9.23.

CHAPTER 10

Properties of Real Operational Amplifiers, Part II

In Chapter 9, various linear attributes of real operational amplifiers were described. This chapter presents additional properties and limitations.

10.1 Input Currents

The input circuit of an operational amplifier has been represented by the circuit of Figure 9.3. It can be seen that when $V_c = V_d = 0$, that is, when the voltages on both input terminals of the operational amplifier are zero, there is a current $I_{p,0}$ flowing into the positive terminal and a current $I_{n,0}$ into the negative terminal. For many practical operational amplifiers,

$$|I_{p,0} - I_{n,0}| \ll \left|\frac{I_{p,0} + I_{n,0}}{2}\right|. \tag{10.1}$$

Thus, it is reasonable to define an *input bias current* I_B as the average of $I_{p,0}$ and $I_{n,0}$:

$$I_B \equiv \frac{I_{p,0} + I_{n,0}}{2}, \tag{10.2}$$

and an *input offset current* I_{offset} as

$$I_{\text{offset}} \equiv I_{p,0} - I_{n,0}.^{*} \tag{10.3}$$

*Frequently, the input offset current is specified as $|I_{\text{offset}}|$ or as $\pm|I_{\text{offset}}|$. Also, in some cases, input currents $I_{p,0}$ and $I_{n,0}$ of Equation 10.2 are specified separately.

EXAMPLE 10.1. At a temperature of 25°C, a Type 741 operational amplifier has a *typical* input bias current $I_{B,\text{typ}} = 80$ nA, a maximum input bias current $I_{B,\max} = 500$ nA, a *typical* input offset current $|I_{\text{offset}}|_{\text{typ}} = 20$ nA, and a maximum input offset current $|I_{\text{offset}}|_{\max} = 200$ nA. No minimum is specified for I_B, and it is assumed that this minimum is zero. Thus, if the current into the positive input terminal is $I_p = 250$ nA, the current into the negative input terminal, I_n, can be between 50 nA and 450 nA; if $I_p = 600$ nA, $I_n = 400$ nA; and if $I_p = 10$ nA, I_n can be between zero and 210 nA.

When operation over a certain temperature range is desired, it is important to take into account the temperature dependence of the input currents.

EXAMPLE 10.2. At a temperature of −55°C, a Type 741 operational amplifier has a maximum input bias current $I_{B,\max} = 1.5\ \mu$A and a maximum input offset current $|I_{\text{offset}}|_{\max} = 0.5\ \mu$A. At a temperature of +125°C, $I_{B,\max} = 0.5\ \mu$A and $|I_{\text{offset}}|_{\max} = 0.2\ \mu$A. Comparison with the data in Example 10.1 shows that $I_{B,\max}$ and $|I_{\text{offset}}|_{\max}$ are the same at +125°C as they are at +25°C but are worse at −55°C.

In some cases, the temperature dependence is given in terms of a *temperature coefficient*. If the temperature coefficient η (eta) of a current is measured in amperes per degree centigrade (°C), the current change ΔI over a temperature range ΔT can be approximated as

$$\Delta I = \eta\, \Delta T. \tag{10.4}$$

EXAMPLE 10.3. The maximum temperature coefficient of the input offset current of an operational amplifier is $|\eta_{\text{offset}}|_{\max} = 0.1$ nA/°C. Thus, if the temperature varies by $\Delta T = 10$°C, the input offset current varies by $\Delta I = |\eta_{\text{offset}}|_{\max}\, \Delta T = (0.1\ \text{nA/°C})(10\text{°C}) = 1$ nA, or by less.

When an operational amplifier with an input bias current of I_B and an input offset current of I_{offset} is used in the feedback amplifier of Figure 3.4, it can be shown that, for $V_p = V_n = 0$, V_{out} can be approximated as

$$V_{\text{out}} \approx -M_{\text{dc}} \frac{R_I R_F}{R_I + R_F} I_{\text{offset}} + M_{\text{dc}} \left(\frac{R_I R_F}{R_I + R_F} - \frac{R_S R_P}{R_S + R_P} \right) I_B, \tag{10.5a}$$

where the resulting dc amplification of the feedback amplifier, M_{dc}, is defined as

$$M_{\text{dc}} \equiv \frac{A_{\text{dc}}}{1 + \dfrac{A_{\text{dc}} R_I}{R_I + R_F}}, \tag{10.5b}$$

and A_{dc} is the amplification of the operational amplifier at zero frequency.

EXAMPLE 10.4. At a temperature of 25°C, an operational amplifier has a maximum input offset current $|I_{\text{offset}}|_{\max} = 50$ pA, a maximum input bias current $|I_B|_{\max} = 100$ pA, and a dc amplification $A_{\text{dc}} = 30{,}000$. The amplifier is used in the circuit of Figure 3.4 with $R_S = R_I = 10\ \text{M}\Omega$, $R_P = R_F = 90\ \text{M}\Omega$, and $V_p = V_n = 0$. Thus, the resulting dc amplification of the feedback amplifier, M_{dc}, is

$$M_{\text{dc}} = \frac{A_{\text{dc}}}{1 + \dfrac{A_{\text{dc}} R_I}{R_I + R_F}} = \frac{30{,}000}{1 + \dfrac{(30{,}000)(10\ \text{M}\Omega)}{10\ \text{M}\Omega + 90\ \text{M}\Omega}} \approx 10.$$

Since $R_S = R_I$ and $R_P = R_F$, input bias current I_B has no effect on the output voltage (see Equation 10.5a). Input offset current $|I_{\text{offset}}|_{\max}$ results in an output voltage with a magnitude of

$$|V_{\text{out}}| = \left| -M_{\text{dc}} \frac{R_I R_F}{R_I + R_F} |I_{\text{offset}}|_{\max} \right| = \left| -10 \frac{(10\ \text{M}\Omega)(90\ \text{M}\Omega)}{10\ \text{M}\Omega + 90\ \text{M}\Omega} 50\ \text{pA} \right| = 4.5\ \text{mV}.$$

Thus, in this example, output voltage V_{out} is always between +4.5 mV and −4.5 mV.

10.2 Input Offset Voltage

In the case of an ideal operational amplifier, the output voltage is zero if both input voltages are zero. In the case of a real operational amplifier, however, there may be a nonzero output voltage even if both input voltages are zero. It has been customary to define, for the operational amplifier of Figure 2.1 with a dc amplification of A_{dc}, an *input offset voltage* V_{offset} as

$$V_{\text{offset}} = \left| \frac{V_{\text{out},V_p=0,V_n=0}}{A_{\text{dc}}} \right|. \tag{10.6}$$

Thus, V_{offset} is an equivalent offset voltage at the input of the amplifier.* The input offset voltage can also be represented by a battery V_{offset} connected in series with one of the input terminals of the operational amplifier.

EXAMPLE 10.5. The input offset voltage of an operational amplifier with a dc amplification $A_{\text{dc}} = 10{,}000$ is measured by grounding both input terminals and measuring the output voltage. An output voltage $V_{\text{out}} = 5$ V is measured this way. Thus, the input offset voltage is $V_{\text{offset}} = 5\ \text{V}/10{,}000 = 0.5$ mV.

*Frequently, the input offset voltage is specified as $\pm V_{\text{offset}}$. Also, the input offset voltage is often called the offset voltage *referred to the input* (*RTI*), as opposed to the offset voltage *referred to the output* (*RTO*) which is $M_{N,\text{dc}}$ times the offset voltage referred to the input.

The input offset voltage V_{offset} is, in general, a function of temperature. This temperature dependence can be described either by specifying V_{offset} at several temperatures, or by a *temperature coefficient* $|dV_{offset}/dT|$, where T is the temperature.

EXAMPLE 10.6. The temperature coefficient of the input offset voltage V_{offset} of an operational amplifier is specified as being at most $10\,\mu V/°C$ between the temperatures of $-55°C$ and $+125°C$; also, $A_{dc} = 4000$. Thus, if the temperature changes from 0°C to +50°C, input offset voltage V_{offset} changes by $(50°C)(10\,\mu V/°C) = 500\,\mu V$, or by less. If the operational amplifier is operated without feedback, then, since its dc amplification is $A_{dc} = 4000$, the output voltage changes by $(500\,\mu V)(4000) = 2$ V, or by less, over the 0°C–50°C temperature range.

If the operational amplifier is used as a feedback amplifier in the circuit of Figure 3.4 with $V_p = V_n = 0$, it can be shown that an input offset voltage V_{offset} results in an output voltage

$$V_{out} = M_{dc} V_{offset}, \tag{10.7a}$$

where the resulting dc amplification, M_{dc}, is defined as

$$M_{dc} \equiv \frac{A_{dc}}{1 + A_{dc}\dfrac{R_I}{R_I + R_F}}, \tag{10.7b}$$

and A_{dc} is the amplification of the operational amplifier at zero frequency. Thus, the voltage at the positive (+) input of the operational amplifier and input offset voltage V_{offset} are both amplified by the same amount.

10.3 Limitations and Ratings

In the preceding, it was assumed that dc amplification A_{dc} of the operational amplifier was constant. In reality, ignoring the offset voltage, the output voltage as a function of input voltage can be characterized by a curve such as shown in Figure 10.1. It can be seen that the slope of the curve, that is, dc amplification $A_{dc} \equiv \partial V_{out}/\partial V_{in}$, is a fairly constant $A_{dc} = 10{,}000$ between a *maximum output voltage* of approximately +20 V and a *minimum output voltage* of approximately −10 V. A realistic design must take these limiting voltages (*output voltage swing*) into account.

The output voltage swing is specified at a given *output current*, which may lead to additional limitations.

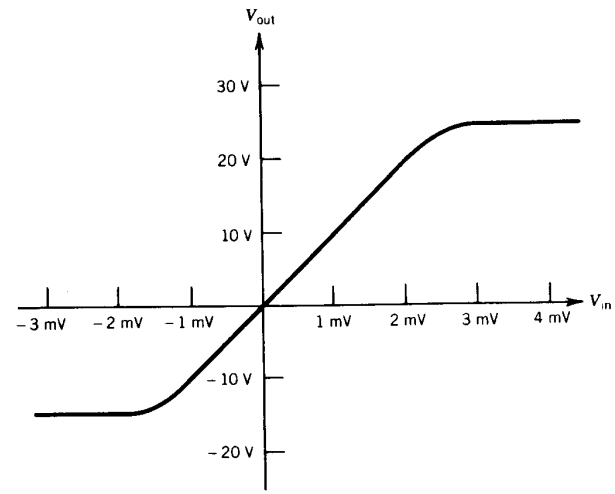

FIGURE 10.1 Output voltage V_{out} versus input voltage V_{in} for a real operational amplifier.

EXAMPLE 10.7. The output voltage swing of the Type 2539 wideband monolithic operational amplifier is specified as ±10 V at output currents of ±10 mA, and the output voltage swing of the Type 9914A wideband hybrid operational amplifier is specified as ±10 V at output currents of ±50 mA. Thus, if the full ±10 V output voltage swings are desired, the output of a Type 2539 wideband monolithic operational amplifier should not be loaded by a resistance less than 10 V/10 mA = 1 kΩ, and the output of a Type 9914A wideband hybrid operational amplifier should not be loaded by a resistance less than 10 V/50 mA = 200 Ω.

Particular care should be exercised in the design to assure that the *maximum ratings* of an operational amplifier are not exceeded. Such ratings include, although are not restricted to, maximum supply voltages, maximum output current, maximum and minimum input voltages, maximum differential input voltage, power dissipation, operating temperature range, storage temperature range, and lead temperature during soldering. In general, damage to the structure of the operational amplifier may result if a maximum rating is exceeded.

10.4 Slew Rate

The slew rate is a limitation on the rate of change in the output voltage of an operational amplifier. The source of this limitation can be seen in Example 5.4, where a stage of an operational amplifier is represented by the circuit of Figure 5.1 consisting of a 1-mA current source in parallel with a resistance $R = 1000\,\Omega$ and with a capacitance C. It is seen that for a step-function input current of $I_{in} = (1\text{ mA})u(t)$, the voltage is $V_{out} = (1\text{ V})(1 - e^{-t/RC})$. In a real operational amplifier, the source of current I_{in} is a transistor that cannot deliver arbitrarily large currents. Thus, I_{in} and hence dV_{out}/dt are limited. Such limitations lead to a specification of the output slew rate, usually given in units of V/μs.

EXAMPLE 10.8. In the circuit of Figure 5.1, capacitance $C = 10$ pF, and the maximum available input current is $I_{in} = 1$ mA. Voltage V_{out} can be written

$$V_{out} = I_{in}R(1 - e^{-t/RC}).$$

From this,

$$\frac{dV_{out}}{dt} = \frac{I_{in}}{C}e^{-t/RC}.$$

The slew rate S is the maximum of $|dV_{out}/dt|$, which occurs at $t = 0$,

$$S = \left|\frac{dV_{out}}{dt}\right|_{max} = \left|\frac{I_{in}}{C}\right| = \left|\frac{1\text{ mA}}{10\text{ pF}}\right| = 100\text{ V}/\mu\text{s}.$$

The finite slew rate also imposes a limitation on the maximum amplitude of a sinewave the operational amplifier can deliver at its output. In the case of a sinewave in the form

$$V_s = V_0 \sin 2\pi ft, \tag{10.8}$$

the rate of change of voltage V_s is

$$\frac{dV_s}{dt} = V_0 2\pi f \cos 2\pi ft. \tag{10.9}$$

The maximum value of $|dV_s/dt|$ is limited by slew rate S:

$$S = \left|\frac{dV_s}{dt}\right|_{max} \geq V_0 2\pi f; \tag{10.10}$$

hence, the maximum of amplitude V_0, $V_{0,max}$, that is available at a frequency f is given by

$$V_{0,max} = \frac{S}{2\pi f}. \tag{10.11}$$

EXAMPLE 10.9. A Type 741 internally compensated operational amplifier has a slew rate of 0.5 V/μs. Thus, for a sinewave with a frequency of $f = 10$ kHz, the maximum amplitude available at the output of the amplifier is

$$V_{0,max} = \frac{S}{2\pi f} = \frac{0.5\text{ V}/\mu\text{s}}{2\pi(10\text{ kHz})} \cong 8\text{ V}.$$

In general, the slew rate and the maximum output amplitude as a function of frequency depend on the resulting amplification and on the frequency compensation used. For this reason, the slew rate is usually specified for a given circuit.

10.5 Noise

Electrical conduction takes place by means of discrete charge carriers, such as electrons and holes. As a result, noise voltage and noise currents are superimposed on the inputs of an operational amplifier. When the signal levels are low, these noise sources may become significant.

If the operational amplifier "sees" a resistance R at its input terminals, the resulting total input noise power per unit bandwidth, designated as *narrow-band noise* or *spot noise*, can be approximated as

$$\frac{v_t^2}{R} = 4kT + \frac{v_n^2}{R} + Ri_n^2. \tag{10.12}$$

The term $4kT$ is the thermal noise power per unit bandwidth contributed by resistance R, v_n^2/R is the noise power per unit bandwidth contributed by the *input noise voltage* v_n of the operational amplifier, and Ri_n^2 is the noise power per unit bandwidth contributed by the *input noise current* i_n of the operational amplifier. The value of kT at room temperature is 0.4×10^{-20} VA/Hz; v_t and v_n are measured in V/$\sqrt{\text{Hz}}$, i_n in A/$\sqrt{\text{Hz}}$.

When v_n and i_n can be considered constants within the bandwidth of interest B, the resulting *input noise power*, P_B, is given by

$$P_B = \frac{Bv_t^2}{R}, \tag{10.13}$$

where v_t^2/R is given by Equation 10.12.* Also, the *rms input noise voltage*, V_B, can be written

$$V_B = \sqrt{P_B R} = v_t\sqrt{B}. \tag{10.14}$$

*When v_n or i_n cannot be considered constant, the resulting *wideband noise* has to be determined by integrating over the bandwidth the product of the amplification and the input noise power per unit bandwidth.

EXAMPLE 10.10. At a frequency of 10 kHz, an operational amplifier has an input noise voltage $v_n = 10\,\text{nV}/\sqrt{\text{Hz}}$ and an input noise current $i_n = 10\,\text{pA}/\sqrt{\text{Hz}}$, both constant within the bandwidth of interest; $B = 100$ Hz. It has an amplification $A = 10{,}000$ and it is operated in the inverting amplifier circuit of Figure 3.2 with $R_I = 101\,\Omega$ and $R_F = 10\,\text{k}\Omega$. Thus, the resulting amplification is $M_I = -100$ and the resistance seen by the operational amplifier at its input terminals is $R = 100\,\Omega$.

The resulting total input noise power per unit bandwidth is given by Equation 10.12:

$$\frac{v_t^2}{R} = 4kT + \frac{v_n^2}{R} + Ri_n^2$$

$$= 1.6 \times 10^{-20}\,\text{VA/Hz} + \frac{10^{-16}\,\text{V}^2/\text{Hz}}{100\,\Omega} + (100\,\Omega)(10^{-22}\,\text{A}^2/\text{Hz})$$

$$= 1.026 \times 10^{-18}\,\text{VA/Hz}.$$

The resulting input noise power within the bandwidth $B = 100$ Hz, from Equation 10.13, is

$$P_B = \frac{Bv_t^2}{R} = (100\,\text{Hz})(1.026 \times 10^{-18}\,\text{VA/Hz}) = 1.026 \times 10^{-16}\,\text{VA},$$

and the resulting rms noise voltage at the input, from Equation 10.14, is

$$V_B = \sqrt{P_B R} = \sqrt{(1.026 \times 10^{-16}\,\text{VA})(100\,\Omega)} = 101\,\text{nV}.$$

The resulting rms noise voltage at the output of the amplifier is $|M_I|\,V_B = (100)(101\,\text{nV}) = 10.1\,\mu\text{V}$.

In many cases, the noise performance of an amplifier circuit is described by a *noise figure* $\mathscr{F}$, which is a measure of the noise degradation resulting from adding the noise of the operational amplifier to the thermal noise of input resistance R. When the resulting amplification is large ($|M_I| \gg 1$ or $M_N \gg 1$), the noise figure can be approximated by

$$\mathscr{F} = 10\,\text{dB}\,\log_{10}\left(1 + \frac{v_n^2/R + i_n^2 R}{4kT}\right). \tag{10.15}$$

It can be shown that the noise figure $\mathscr{F}$ has its minimum value, $\mathscr{F}_{\min}$, when $R = R_{\text{opt}} = v_n/i_n$, and it is

$$\mathscr{F}_{\min} = \mathscr{F}_{R = v_n/i_n} = 10\,\text{dB}\,\log_{10}\left(1 + \frac{v_n^2/R_{\text{opt}}}{2kT}\right). \tag{10.16}$$

EXAMPLE 10.11. In Example 10.10, $v_n = 10^{-8}\,\text{V}/\sqrt{\text{Hz}}$, $i_n = 10^{-11}\,\text{A}/\sqrt{\text{Hz}}$, $R = 100\,\Omega$, and $|M_I| \gg 1$. Thus, from Equation 10.15 and with $kT = 0.4 \times 10^{-20}$ VA/Hz, the noise figure becomes

$$\mathscr{F} = 10\,\text{dB}\,\log_{10}\left(1 + \frac{v_n^2/R + i_n^2 R}{4kT}\right) = 10\,\text{dB}\,\log_{10} 64.1 = 18\,\text{dB}.$$

The minimum noise figure is attained at $R = R_{\text{opt}} = v_n/i_n = (10^{-8}\,\text{V}/\sqrt{\text{Hz}})/(10^{-11}\,\text{A}/\sqrt{\text{Hz}}) = 1\,\text{k}\Omega$, and its value, from Equation 10.16, is

$$\mathscr{F}_{\min} = 10\,\text{dB}\,\log_{10}\left(1 + \frac{v_n^2/R_{\text{opt}}}{2kT}\right) = 10\,\text{dB}\,\log_{10}\left(1 + \frac{(10^{-16}\,\text{V}^2/\text{Hz})/1000\,\Omega}{2(0.4 \times 10^{-20}\,\text{VA/Hz})}\right)$$

$$= 10\,\text{dB}\,\log_{10} 13.5 = 11.3\,\text{dB}.$$

Above considerations apply equally well to inverting and noninverting amplifiers. In the case of differential amplifiers with signals applied to both inputs, the evaluation of the noise becomes slightly more involved.

PROBLEMS

10.1 At a temperature of +25°C, a hybrid operational amplifier has a maximum input bias current of $\pm 10\,\mu$A and a maximum input offset current of $\pm 1\,\mu$A. Find the maximum and minimum values of current I_p into the positive input terminal, if $I_n = 0.5\,\mu$A, $5\,\mu$A, and $10.5\,\mu$A.

10.2 The Type 13741 operational amplifier uses field-effect transistors (FETs) at its inputs and as a result it has low input currents. At a temperature of +25°C, the maximum input bias current is 200 pA and the maximum input offset current is 50 pA. The signs of the currents are not specified and it is assumed that they can be either positive or negative. Three of these amplifiers are used in the circuit of Figure 3.10 with $R_1 = 10\,\text{M}\Omega$, $R_2 = 11\,\text{M}\Omega$, $R_I = R_S = 100\,\Omega$, $R_F = R_P = 10{,}000\,\Omega$, and $A_1 = A_2 = A_3 = 100{,}000$. Find the maximum change in output voltage V_{out} resulting from the input bias currents and from the input offset currents.

10.3 Derive Equation 10.5a.

10.4 The input offset current of a hybrid operational amplifier has a maximum temperature coefficient of $0.1\,\mu\text{A}/°\text{C}$. Find the minimum and maximum values of the input offset current I_{offset}, if the temperature is varied between −55°C and +125°C, and if at a temperature of +25°C the input offset current is $I_{\text{offset}} = 1\,\mu$A.

10.5 The input offset voltage V_{offset} of an operational amplifier has a temperature coefficient $|dV_{offset}/dT|$ of less than 25 μV/°C; the dc amplification is $A_{dc} = 30{,}000$. Find the maximum change in the output voltage as a result of the nonzero dV_{offset}/dT, if the amplifier is operated without feedback.

10.6 Derive Equation 10.7a.

10.7 At a temperature of +25°C, the maximum input offset voltage of a Type 13741 operational amplifier is $V_{offset} = 15$ mV. This operational amplifier is used in the differential amplifier of Figure 3.4 with $V_n = V_p = 0$, $R_S = R_I = 10$ MΩ, and $R_P = R_F = 90$ MΩ. Find the maximum change in output voltage V_{out} as a result of input offset voltage V_{offset}.

10.8 At a temperature of +25°C, a Type 108A operational amplifier has a maximum input bias current of 2 nA, a maximum input offset current of 0.2 nA, a maximum input offset voltage of 0.5 mV, and a dc amplification of $A_{dc} = 300{,}000$. Find the range of the output voltage, if the amplifier is used in the circuit of Figure 3.4 with $R_S = R_I = 10$ MΩ, $R_P = R_F = 90$ MΩ, and $V_p = V_n = 0$.

10.9 A Type 9914A hybrid operational amplifier has a slew rate of 1000 V/μs. Find the maximum frequency at which this amplifier can supply a 10-V *peak-to-peak* sinewave.

10.10 When lead–lag compensation is applied to an operational amplifier, for an $M_{dc} = 10$ its slew rate is 50 V/μs. The maximum and minimum voltages that the amplifier can provide at its output are +5 V and −5 V, respectively. Sketch the maximum available sinewave amplitude as a function of frequency for frequencies between 1 kHz and 10 MHz.

10.11 The noise characteristics of the Type 9914A hybrid operational amplifier are specified at a frequency of 10 kHz by $v_n = 20\ \text{nV}/\sqrt{\text{Hz}}$ and $i_n = 10\ \text{pA}/\sqrt{\text{Hz}}$. It has an amplification $A = 5000$ and it is used in the noninverting feedback amplifier of Figure 3.1 with a resulting amplification $M_N = 100$ and with a bandwidth $B = 10$ Hz. Find the values of input resistor R_I and feedback resistor R_F such that the minimum noise figure is attained. Also, find the value of the minimum noise figure. What is the resulting rms noise voltage at the output of the amplifier?

10.12 Show that the noise figure of Equation 10.15 has its minimum value when $R = v_n/i_n$.

CHAPTER 11

Other Circuits

The preceding chapters described the use of operational amplifiers as voltage amplifiers; this chapter discusses other applications. Section 11.1 describes amplifiers with current source inputs, used for converting an input current I_{in} to a proportional output voltage V_{out}. Section 11.2 presents two adder circuits, used mainly for analog computation. Sections 11.3 and 11.4 describe two types of pulse-shaping circuits: integrators and differentiators. Section 11.5 outlines two nonlinear circuits: an exponential amplifier and a logarithmic amplifier.

11.1 Current Source Inputs

There are two basic representations of signal sources: One consists of a voltage source V_{in} in series with a source resistance R_{source}, and the other consists of a current source I_{in} in parallel with a source resistance R_{source}. The two representations are equivalent if $I_{in} = V_{in}/R_{source}$.

Thus far, this book has used the representation consisting of a voltage source V_{in} in series with a source resistance R_{source}. Also, except in Sections 7.7 and 8.5 dealing with inverting feedback amplifiers, it was assumed that the effects of nonzero R_{source} are negligibly small and the schematic diagrams were shown with $R_{source} = 0$.

This section deals with the other extreme, where it is preferable to represent a signal source by a current source I_{in} in parallel with a source resistance R_{source}. Such situations arise, for example, in high-impedance transducers as well as at the collectors of bipolar transistors and at the drains of MOS devices.

Because of the equivalence of the two representations, in principle, the results derived previously are also applicable for a current source input. However, this approach does not readily provide results for the limit of $R_{source} \to \infty$, which is often a realistic approximation. Thus, in addition to using previously obtained results, this section provides results that are applicable to current source inputs.

11.1.1 dc Characteristics

Figure 11.1 shows the schematic diagram of a feedback amplifier with current source input I_{in}. It can be shown (see Problem 11.1) that

$$\frac{V_{out}}{I_{in}} = -R_F \frac{1}{1 + \dfrac{1 + R_F/R_I}{A}}. \tag{11.1a}$$

With

$$F_{N,dc} = \frac{R_I}{R_F + R_I}, \tag{11.1b}$$

Equation 11.1a can also be written as

$$\frac{V_{out}}{I_{in}} = -\frac{R_F R_I}{R_F + R_I} \frac{A}{1 + AF_{N,dc}} \tag{11.1c}$$

or as

$$\frac{V_{out}}{I_{in}} = -R_F F_{N,dc} \frac{A}{1 + AF_{N,dc}}. \tag{11.1d}$$

Also, V_{out}/I_{in} can be approximated as

$$\frac{V_{out}}{I_{in}} \cong -R_F \tag{11.2a}$$

provided that

$$A \gg 1 + \frac{R_F}{R_I}, \tag{11.2b}$$

which is the usual case.

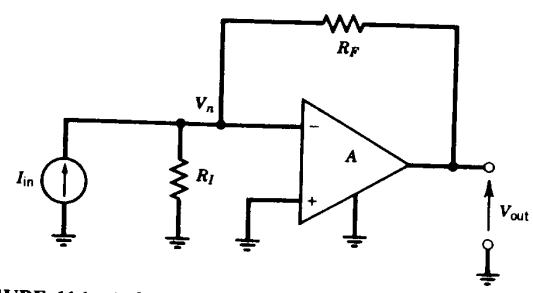

FIGURE 11.1 A dc schematic diagram of a feedback amplifier with a current source input.

11.1.2 Transient Response and Frequency Response

Figure 11.2 shows the schematic diagram of a feedback amplifier with current source input I_{in} and with capacitances C_F and C_I in addition to resistances R_F and R_I. Capacitance C_I is the sum of the input capacitance of the operational amplifier, the capacitance of the current source, stray capacitances, and in some cases it also includes a capacitance added intentionally. Capacitance C_F includes stray capacitances, and often it also includes a capacitance added to improve stability and transient response.

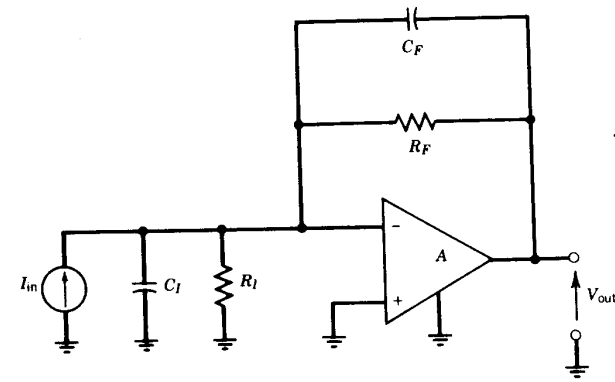

FIGURE 11.2 Schematic diagram of a feedback amplifier with a current source input.

It can be shown (see Problem 11.3) that in the Laplace transform domain

$$\frac{\mathscr{L}\{V_{out}(t)\}}{\mathscr{L}\{I_{in}(t)\}} = \frac{-R_F}{1 + sR_F C_F} F_N \frac{A}{1 + AF_N}, \tag{11.3a}$$

where

$$F_N = F_{N,dc} \frac{1 + s\tau_U}{1 + s\tau_L} \tag{11.3b}$$

with $F_{N,dc}$ given by Equation 11.1b and with

$$\tau_U = R_F C_F \tag{11.3c}$$

and

$$\tau_L = \frac{R_F R_I}{R_F + R_I}(C_F + C_I). \tag{11.3d}$$

Note that Equation 11.3a can also be written

$$\frac{\mathscr{L}\{V_{out}(t)\}}{\mathscr{L}\{I_{in}(t)\}} = -R_F \frac{F_{N,dc}}{1 + s\tau_L} \frac{A}{1 + AF_N}. \tag{11.4}$$

Also note that when

$$A = \frac{A_{dc}}{(1 + s\tau_1)(1 + s\tau_2)}, \tag{11.5a}$$

Equation 11.4 can be written*

$$\frac{\mathscr{L}\{V_{out}(t)\}}{\mathscr{L}\{V_{in}(t)\}} = -R_F \frac{A_{dc}}{A_{dc}(1 + s\tau_U) + (1 + s\tau_1)(1 + s\tau_2)(1 + s\tau_L)/F_{N,dc}}. \tag{11.5b}$$

Whether the transient response is free of ringing or not is determined by $1 + AF_N$ in Equation 11.4—exactly as was the case for a noninverting feedback amplifier with a voltage source input. However, because the numerator of Equation 11.4 is a constant, a transient response that is free of ringing is also free of overshoot—unlike in a noninverting feedback amplifier with a voltage source input where there is a $1 + s\tau_L$ term in the numerator of the equation equivalent to Equation 11.4.

EXAMPLE 11.1. A Type 13741 internally compensated FET-input operational amplifier is characterized by $A_{dc} = 100{,}000$, $f_1 = 10$ Hz, and $f_2 = 1$ MHz. It is used in the circuit of Figure 11.2 with $C_I = 10$ pF, which includes the input capacitance of the operational amplifier, the capacitance of the current source, and stray capacitances. Also, $R_F = 265$ kΩ and $C_F = 4.6$ pF are chosen based on the lag–lead compensation used in Example 8.25 and Problem 8.77 of Chapter 8. The value of R_I is much greater than R_F, and its presence can be ignored in Figure 11.2; thus, $F_{N,dc} = 1$.

It can be shown (see Problem 11.5) that, based on Example 8.26, Equation 11.4 can also be written

$$\frac{\mathscr{L}\{V_{out}(t)\}}{\mathscr{L}\{V_{in}(t)\}} = -R_F \frac{1}{(1 + s\tau_L)} \frac{1}{(1 + s\tau_A)^3},$$

where $R_F = 265$ kΩ, $\tau_L = 3.87$ μs, and $\tau_A = 0.45$ μs.

To obtain the frequency response, $V_{out}(f)/I_{in}(f)$, the variable s has to be replaced by $j2\pi f$ in $\mathscr{L}\{V_{out}(t)\}/\mathscr{L}\{I_{in}(t)\}$.

*The derivation of Equation 11.5b is the subject of Problem 11.4.

EXAMPLE 11.2. The frequency response of the circuit described in Example 11.1 can be written

$$\frac{V_{out}(f)}{I_{in}(f)} = -R_F \frac{1}{1 + jf/f_L} \frac{1}{(1 + jf/f_A)^3},$$

where $R_F = 265$ kΩ, $f_L \cong 41$ kHz, and $f_A \cong 354$ kHz.

The magnitude of the frequency response is

$$\left|\frac{V_{out}(f)}{I_{in}(f)}\right| = \frac{R_F}{\sqrt{\left[1 + \left(\frac{f}{f_L}\right)^2\right]\left[1 + \left(\frac{f}{f_A}\right)^2\right]^3}}.$$

Also, the phase is

$$\varphi = -\arctan\frac{f}{f_L} - 3\arctan\frac{f}{f_A}.$$

11.2 Adder Circuits

Adder circuits are capable of summing several input signals. This section describes basic properties of two simple circuits.

11.2.1 dc Characteristics

Figure 11.3 shows the schematic diagram of a *noninverting adder* with three input voltages V_1, V_2, and V_3 (the circuit can also be extended to more inputs). It can be shown (see Problem 11.7) that at low frequencies the output voltage in Figure 11.3 is given by

$$V_{out} = M_{N,dc} \frac{\frac{V_1}{R_1} + \frac{V_2}{R_2} + \frac{V_3}{R_3}}{\frac{1}{R_1} + \frac{1}{R_2} + \frac{1}{R_3}}, \tag{11.6}$$

where $M_{N,dc}$ is the resulting dc amplification of the feedback amplifier. Note that the value of $M_{N,dc}$ is approximately 1 in Figure 11.3; however, this can be altered by adding a feedback network at the negative input of the operational amplifier, as in previous noninverting amplifiers.

Figure 11.4 shows the schematic diagram of an *inverting adder* with three input voltages V_1, V_2, and V_3 (as before, the circuit can also be extended to more inputs). It can be shown (see Problem 11.8) that at low frequencies the output voltage in Figure 11.4 is given by

$$V_{out} = -R_F\left(\frac{V_1}{R_1} + \frac{V_2}{R_2} + \frac{V_3}{R_3}\right) F_{N,dc} \frac{A}{1 + AF_{N,dc}}, \tag{11.7a}$$

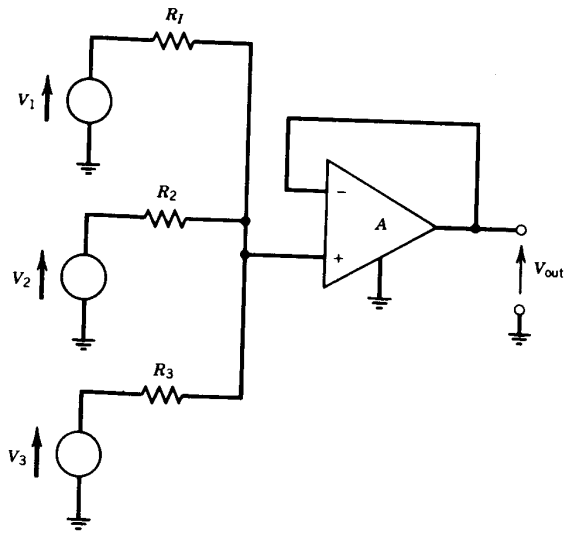

FIGURE 11.3 Noninverting adder with three inputs.

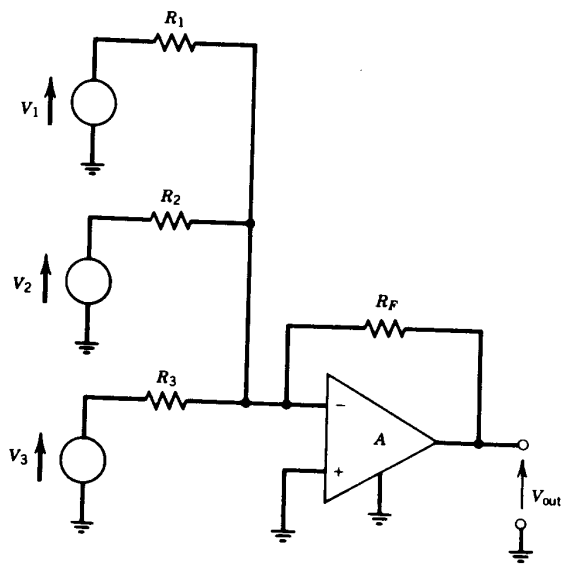

FIGURE 11.4 Inverting adder with three inputs.

where

$$F_{N,dc} = \frac{R_I}{R_F + R_I} \tag{11.7b}$$

with

$$\frac{1}{R_I} = \frac{1}{R_1} + \frac{1}{R_2} + \frac{1}{R_3}. \tag{11.7c}$$

11.2.2 Transient Response and Frequency Response

The transient response and frequency response of adder circuits can be found as was discussed for feedback amplifiers in Chapter 8. Thus, V_{out} in the noninverting adder of Figure 11.3 is given by Equation 11.6 with $M_{N,dc}$ replaced by M_N of the feedback amplifier, which may include a feedback network consisting of R_F, R_I, C_F, and C_I, as in previous noninverting feedback amplifiers. The situation is similar in the inverting adder of Figure 11.4; however, in this case, the limitations discussed in Sections 7.7 and 8.5 must also be taken into account.

11.3 Integrator Circuits

An integrator provides an approximation of the time integral of the input voltage, that is, $V_{out} \cong \text{constant} \cdot \int V_{in} dt$. Figure 11.5 shows a simple integrator circuit that uses an operational amplifier.*

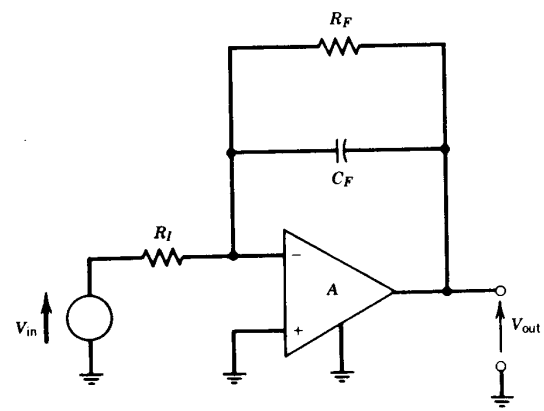

FIGURE 11.5 Integrator circuit using an operational amplifier.

*The circuit may also include a capacitance C_I between the negative input of the operational amplifier and ground. This is discussed in Problem 11.15.

In the Laplace transform domain, by use of Equations 3.12 and 3.13 with R_F replaced by $R_F/(1 + sR_FC_F)$,

$$\frac{\mathscr{L}\{V_{out}(t)\}}{\mathscr{L}\{V_{in}(t)\}} = \frac{-A}{1 + (A+1)\dfrac{R_I}{R_F}(1 + sR_FC_F)}, \tag{11.8}$$

where A is the amplification of the operational amplifier. For A with two corner frequencies, in the Laplace transform domain,

$$A = \frac{A_{dc}}{(1 + s\tau_1)(1 + s\tau_2)}. \tag{11.9}$$

It can be shown (see Problem 11.10) that for the A given by Equation 11.9, Equation 11.8 can be approximated as

$$\frac{\mathscr{L}\{V_{out}(t)\}}{\mathscr{L}\{V_{in}(t)\}} = -\frac{A_{dc}+1}{1 + (A_{dc}+1)\dfrac{R_I}{R_F}} \frac{1}{1 + \dfrac{A_{dc}+1}{1 + (A_{dc}+1)\dfrac{R_I}{R_F}} sR_IC_F} \frac{A}{1+A} \tag{11.10}$$

when

$$\frac{1}{1 + \dfrac{R_I}{R_F} + \dfrac{\dfrac{1}{\tau_1} + \dfrac{1}{\tau_2}}{\dfrac{1}{R_IC_F}}} \ll 1 \tag{11.11a}$$

and

$$\frac{1}{1 + \dfrac{R_I}{R_F} + (A_{dc}+1)\dfrac{R_IC_F}{\tau_1 + \tau_2}} \ll 1. \tag{11.11b}$$

It can also be shown (see Problem 11.11) that for $R_I/R_F \ll 1$, the conditions of Equations 11.11a and 11.11b can be written

$$\frac{\dfrac{1}{R_IC_F}}{\dfrac{1}{\tau_1} + \dfrac{1}{\tau_2}} \ll 1 \tag{11.12a}$$

and, for $A_{dc} \gg 1$,

$$\frac{\tau_1 + \tau_2}{A_{dc}R_IC_F} \ll 1. \tag{11.12b}$$

Note that the requirement for Equations 11.12a and 11.12b to be valid is $R_I/R_F \ll 1$; however, the stricter condition $(A_{dc} + 1)R_I/R_F \ll 1$ is *not* required.

Another limiting case of interest arises when $\tau_1 \gg \tau_2$; that is, $f_1 \ll f_2$, which is common in operational amplifiers. In this case, Equations 11.11a and 11.11b become

$$\frac{1}{1 + \dfrac{R_I}{R_F} + \dfrac{R_IC_F}{\tau_2}} \ll 1 \tag{11.13a}$$

and

$$\frac{1}{1 + \dfrac{R_I}{R_F} + (A_{dc}+1)\dfrac{R_IC_F}{\tau_1}} \ll 1. \tag{11.13b}$$

Also, for $\tau_1 \gg \tau_2$ *and* $R_I/R_F \ll 1$, the conditions of Equations 11.13a and 11.13b can be written

$$\frac{\tau_2}{R_IC_F} \ll 1 \tag{11.14a}$$

and, for $A_{dc} \gg 1$,

$$\frac{\tau_1}{A_{dc}R_IC_F} \ll 1. \tag{11.14b}$$

EXAMPLE 11.3. A Type 13741 internally compensated FET-input operational amplifier is characterized by $A_{dc} = 100{,}000$, $f_1 = 10$ Hz, and $f_2 = 1$ MHz. It is used in the integrator circuit of Figure 11.5 with $R_I = 1$ MΩ and with a feedback capacitance $C_F = 1$ μF that has an unavoidable leakage resistance of $R_F = 10$ GΩ. Also, there is a capacitance $C_I = 10$ pF (not shown in Figure 11.5) between the negative input of the operational amplifier and ground. However, this C_I is ignored because $C_I/C_F = 10\text{ pF}/1\ \mu\text{F} = 10^{-5} \ll 1$ (see Problem 11.15); hence, the results for $C_I = 0$ are applicable.

From the above, $f_2/f_1 = \tau_1/\tau_2 = 1\text{ MHz}/10\text{ Hz} = 10^5 \gg 1$; also, $R_I/R_F = 1\text{ M}\Omega/10\text{ G}\Omega = 10^{-4} \ll 1$. Hence, Equations 11.14a and 11.14b can be used. The left side of Equation 11.14a becomes

$$\frac{\tau_2}{R_IC_F} = \frac{1}{2\pi f_2 R_IC_F} = \frac{1}{2\pi(1\text{ MHz})(1\text{ M}\Omega)(1\ \mu\text{F})} \cong 0.16 \times 10^{-6}.$$

The left side of Equation 11.14b becomes

$$\frac{\tau_1}{A_{dc}R_IC_F} = \frac{1}{2\pi f_1 A_{dc}R_IC_F} = \frac{1}{2\pi(10\text{ Hz})(100{,}000)(1\text{ M}\Omega)(1\ \mu\text{F})} \cong 0.16 \times 10^{-6}.$$

Thus, in this circuit, the left sides of Equations 11.14a and 11.14b are equal. Also, they are both much less than 1; hence, the conditions are satisfied and Equation 11.10 is valid and can be written

$$\frac{\mathscr{L}\{V_{out}(t)\}}{\mathscr{L}\{V_{in}(t)\}} \cong \frac{-9091}{1 + s(9091 \text{ seconds})} \frac{A}{1 + A},$$

where

$$A = \frac{100{,}000}{(1 + s\tau_1)(1 + s\tau_2)}$$

with

$$\tau_1 = \frac{1}{2\pi f_1} = \frac{1}{2\pi(10 \text{ Hz})} \cong 16 \text{ ms}$$

and

$$\tau_2 = \frac{1}{2\pi f_2} = \frac{1}{2\pi(1 \text{ MHz})} \cong 0.16\ \mu\text{s}.$$

The right side of Equation 11.10 is the product of three fractions. The first fraction is a constant and the second fraction approximates integration: These are discussed in Section 11.3.1. The third fraction is near 1 except at very high frequencies and very short times; it also determines whether the circuit is stable: This is discussed in Section 11.3.2. The overall frequency response and transient response are discussed in Section 11.3.3.

11.3.1 Integration

In this section, Equation 11.10 is approximated as

$$\frac{\mathscr{L}\{V_{out}(t)\}}{\mathscr{L}\{V_{in}(t)\}} \cong -\frac{A_{dc} + 1}{1 + (A_{dc} + 1)\dfrac{R_I}{R_F}} \frac{1}{1 + \dfrac{A_{dc} + 1}{1 + (A_{dc} + 1)\dfrac{R_I}{R_F}} sR_IC_F}, \tag{11.15a}$$

with the assumption that

$$\frac{A}{1 + A} \cong 1. \tag{11.15b}$$

Note that the left side of Equation 11.15b is the transfer function of a voltage follower with the negative input of the operational amplifier directly connected to its output. This configuration has the highest operating speed, provided that it is stable. As a result, the approximation of Equation 11.15b is realistic for a wide range of times and frequencies: This is discussed later.

EXAMPLE 11.4. Example 11.3 used a Type 13741 operational amplifier in the integrator circuit of Figure 11.5 with $R_I = 1\ \text{M}\Omega$, $R_F = 10\ \text{G}\Omega$, and $C_F = 1\ \mu\text{F}$. Using the results obtained there, Equation 11.15a can be written as

$$\frac{\mathscr{L}\{V_{out}(t)\}}{\mathscr{L}\{V_{in}(t)\}} = \frac{-9091}{1 + s(9091 \text{ seconds})}.$$

Also, in the condition of Equation 11.15b,

$$A = \frac{A_{dc}}{(1 + s\tau_1)(1 + s\tau_2)},$$

where $\tau_1 \cong 16$ ms, $\tau_2 \cong 0.16\ \mu$s, and $A_{dc} = 100{,}000$.

When input voltage $V_{in}(t)$ is a step function with magnitude V_0 then, by use of Equation 11.15a,

$$V_{out}(t) \cong -|M_{dc}|V_0(1 - e^{-t/[|M_{dc}|R_IC_F]}), \tag{11.16}$$

where

$$|M_{dc}| \equiv \frac{A_{dc} + 1}{1 + (A_{dc} + 1)\dfrac{R_I}{R_F}} \tag{11.17}$$

is the magnitude of the dc voltage amplification of the circuit. Note that the time constant is a large $|M_{dc}|R_IC_F$—*not* R_IC_F. Also note that output voltage $V_{out}(t)$ becomes $-|M_{dc}|V_0$ for times $t \gg |M_{dc}|R_IC_F$. Furthermore, it can be shown (see Problem 11.20) that for short times Equation 11.16 can be approximated as

$$V_{out}(t) \cong -V_0 \frac{t}{R_IC_F} \tag{11.18a}$$

when

$$t \ll |M_{dc}|R_IC_F. \tag{11.18b}$$

EXAMPLE 11.5. In Example 11.4, $A_{dc} = 100{,}000$, $R_I = 1\ \text{M}\Omega$, $R_F = 10\ \text{G}\Omega$, and $C_F = 1\ \mu\text{F}$. Hence, from Equation 11.17,

$$|M_{dc}| = \frac{A_{dc} + 1}{1 + (A_{dc} + 1)\dfrac{R_I}{R_F}} = \frac{100{,}000 + 1}{1 + (100{,}000 + 1)\dfrac{1\ \text{M}\Omega}{10\ \text{G}\Omega}} \cong 9091.$$

Thus, for an input voltage $V_{in}(t)$ that is a step function with magnitude V_0, from Equation 11.16,

$$V_{out}(t) = -|M_{dc}|V_0(1 - e^{-t/[|M_{dc}|R_IC_F]}) = -9091\ V_0(1 - e^{-t/[9091(1\ \text{M}\Omega)(1\ \mu\text{F})]})$$
$$= -9091\ V_0(1 - e^{-t/9091 \text{ seconds}}).$$

Also, from Equation 11.18a, $V_{out}(t)$ can be approximated as

$$V_{out}(t) \cong -V_0 \frac{t}{R_I C_F} = -V_0 \frac{t}{(1\ \text{M}\Omega)(1\ \mu\text{F})} = -V_0 \frac{t}{1\ \text{second}}$$

when, according to Equation 11.18b,

$$t \ll |M_{dc}| R_I C_F = 9091(1\ \text{M}\Omega)(1\ \mu\text{F}) = 9091\ \text{seconds}.$$

In many applications, input voltage V_{in} is a narrow pulse that can be approximated by an *impulse function*, $\delta(t)$, which is also known as a δ *function* (*delta function*). For the purposes of this discussion, the impulse function can be considered to be the time derivative of a step function with magnitude 1, that is, the time derivative of $u(t)$:

$$\delta(t) = \frac{du(t)}{dt}, \tag{11.19a}$$

whereby also

$$u(t) = \int \delta(t)dt. \tag{11.19b}$$

Note that $\delta(t)$ has a dimension of 1/second.

Since $u(t) = 0$ for $t < 0$ and it is 1 for $t > 0$, its time derivative $\delta(t)$ is zero for all times except *at* $t = 0$ where it is infinitely large; also the area under the impulse function is 1. Also note that the Laplace transform of the impulse function is 1:

$$\mathscr{L}\{\delta(t)\} = 1. \tag{11.20}$$

When input voltage $V_{in}(t) = \Phi_0\delta(t)$ then, by use of Equation 11.15a,

$$V_{out}(t) \cong -\frac{\Phi_0}{R_I C_F} e^{-t/[|M_{dc}|R_I C_F]}, \tag{11.21}$$

where $|M_{dc}|$ is given by Equation 11.17. Note that Φ_0 has a dimension of volt · second.

Also, it can be shown (see Problem 11.24) that for short times Equation 11.21 can be approximated as

$$V_{out}(t) \cong -\frac{\Phi_0}{R_I C_F} \tag{11.22a}$$

when

$$t \ll |M_{dc}| R_I C_F. \tag{11.22b}$$

EXAMPLE 11.6. The step-function input in Example 11.5 is replaced by $V_{in}(t) = \Phi_0\delta(t)$. Thus, from Equation 11.21,

$$V_{out}(t) = -\frac{\Phi_0}{R_I C_F} e^{-t/[|M_{dc}|R_I C_F]} = -\frac{\Phi_0}{(1\ \text{M}\Omega)(1\ \mu\text{F})} e^{-t/[9091(1\ \text{M}\Omega)(1\ \mu\text{F})]}$$

$$= -\frac{\Phi_0}{1\ \text{second}} e^{-t/9091\ \text{seconds}}.$$

Also, from Equation 11.22a, $V_{out}(t)$ can be approximated as

$$V_{out}(t) \cong -\frac{\Phi_0}{R_I C_F} = -\frac{\Phi_0}{(1\ \text{M}\Omega)(1\ \mu\text{F})} = -\frac{\Phi_0}{1\ \text{second}}$$

when, according to Equation 11.22b,

$$t \ll 9091\ \text{seconds}.$$

The time integral of a step function with magnitude V_0, that is, the time integral of $V_0u(t)$, can be written

$$\int_{-\infty}^{t} V_0 u(t)dt = V_0 t, \tag{11.23a}$$

for times

$$t > 0, \tag{11.23b}$$

and the integral is zero for $t < 0$. Also, the time integral of an impulse function with magnitude Φ_0, that is, the time integral of $\Phi_0\delta(t)$, can be written

$$\int_{-\infty}^{t} \Phi_0\delta(t)dt = \Phi_0, \tag{11.24a}$$

for times

$$t > 0, \tag{11.24b}$$

and the integral is zero for $t < 0$.

The output voltage, $V_{out}(t)$, in the integrator of Figure 11.5 was approximated by Equations 11.18a and 11.22a for times $t \ll |M_{dc}|R_I C_F$: by Equation 11.18a for a step-function input $V_0u(t)$ and by Equation 11.22a for an impulse-function input $\Phi_0\delta(t)$. Thus, at least for these two input functions, the integrator of Figure 11.5 provides an output voltage

$$V_{out}(t) = -\frac{1}{R_I C_F}\int_0^t V_{in}(t)dt \tag{11.25a}$$

for times

$$0 < t \ll |M_{dc}|R_I C_F \tag{11.25b}$$

provided that $V_{out}(t) = 0$ for $t < 0$.

Thus, according to Equation 11.25a, the circuit of Figure 11.5 provides integration with a scale factor of $-1/R_I C_F$ in the time range limited by Equation 11.25b. It can be shown that, based on Equation 11.15a, this is also true for *any* input voltage $V_{in}(t)$ and not only for the step-function and impulse-function inputs discussed above. (See also Problem 11.27.)

11.3.2 Response at High Frequencies and Short Times

In Section 11.3.1, the fraction $A/(1 + A)$ was approximated as 1 (see Equation 11.15b). This section discusses the frequency response and the transient response resulting from $A/(1 + A)$.

The transfer function $A/(1 + A)$ is that of a voltage follower with the negative input of the operational amplifier directly connected to its output. This transfer function is applicable to Figure 11.5, which omits capacitance C_I between the negative input of the operational amplifier and ground; however, it is also applicable to nonzero C_I when $C_I \ll C_F$ (see Problem 11.15).

The voltage follower represented by $A/(1 + A)$ may be unstable. In such a case, the circuit is useless.

EXAMPLE 11.7. A Type 2539 wideband monolithic operational amplifier is characterized by $A_{dc} = 30{,}000$, $f_1 = 20\,\text{kHz}$, and $f_2 = f_3 = 300\,\text{MHz}$. It is used in the integrator circuit of Figure 11.5 with $R_I = 1\,\text{k}\Omega$, $C_F = 1\,\mu\text{F}$, and $R_F = 10\,\text{G}\Omega$. Also, there is a capacitance $C_I = 5\,\text{pF}$ (not shown in Figure 11.5) between the negative input of the operational amplifier and ground. However, this C_I is ignored because $C_I/C_F = 5\,\text{pF}/1\,\mu\text{F} = 0.5 \times 10^{-5} \ll 1$ (see Problem 11.15); hence, the results for $C_I = 0$ are applicable.

From the above,

$$\tau_1 = \frac{1}{2\pi f_1} = \frac{1}{2\pi(20\,\text{kHz})} \cong 8\,\mu\text{s}$$

and

$$\tau_2 = \tau_3 = \frac{1}{2\pi f_2} = \frac{1}{2\pi f_3} = \frac{1}{2\pi(300\,\text{MHz})} \cong 0.5\,\text{ns}.$$

Thus, $\tau_1 \gg \tau_2$ and the conditions given in Problem 11.14 may be used for the validity of Equation 11.10. The left side of the first condition becomes

$$\frac{1}{1 + \dfrac{R_I}{R_F} + \dfrac{R_I C_F}{\tau_2 + \tau_3}} = \frac{1}{1 + \dfrac{1\,\text{k}\Omega}{10\,\text{G}\Omega} + \dfrac{(1\,\text{k}\Omega)(1\,\mu\text{F})}{0.5\,\text{ns} + 0.5\,\text{ns}}} \cong 10^{-6}.$$

This is much less than 1; hence, the first condition is satisfied. The left side of the second condition becomes

$$\frac{1}{1 + \dfrac{R_I}{R_F} + (A_{dc} + 1)\dfrac{R_I C_F}{\tau_1}} = \frac{1}{1 + \dfrac{1\,\text{k}\Omega}{10\,\text{G}\Omega} + (30{,}000 + 1)\dfrac{(1\,\text{k}\Omega)(1\,\mu\text{F})}{8\,\mu\text{s}}}$$

$$\cong 0.27 \times 10^{-6}$$

This is much less than 1; hence, the second condition is also satisfied. Therefore, both conditions are satisfied, Equation 11.10 is applicable, and the high-frequency response is represented by $A/(1 + A)$.

According to Example 7.4, a voltage follower with this $A/(1 + A)$ is on the verge of instability. Thus, the circuit of this example is also on the verge of instability and is useless.

When Equation 11.10 is valid, the phase margin of the integrator is determined by the phase margin of $A/(1 + A)$. This is illustrated in Example 11.8.

EXAMPLE 11.8. In the integrator of Example 11.3,

$$A = \frac{100{,}000}{(1 + \text{j}f/10\,\text{Hz})(1 + \text{j}f/1\,\text{MHz})}.$$

Since $10\,\text{Hz} \ll 1\,\text{MHz}$, for the purpose of finding the phase margin A can be approximated as

$$A = \frac{100{,}000}{(\text{j}f/10\,\text{Hz})(1 + \text{j}f/1\,\text{MHz})}.$$

Thus, Equation 7.62a is applicable with $A_{dc}F_{N,dc} = 100{,}000$, $f_0 = 10\,\text{Hz}$, and $f_1 = 1\,\text{MHz}$. Hence, Equation 7.67 can be applied to find phase margin φ_M:

$$A_{dc}F_{N,dc} = \frac{f_1}{f_0}\cot\varphi_M\sqrt{1 + \cot^2\varphi_M};$$

that is,

$$100{,}000 = \frac{1\,\text{MHz}}{10\,\text{Hz}}\cot\varphi_M\sqrt{1 + \cot^2\varphi_M}.$$

From this, φ_M can be expressed (see Problem 11.28) as

$$\varphi_M = \operatorname{arccot}\sqrt{\frac{\sqrt{5} - 1}{2}} = 51.8^\circ.$$

When Equation 11.10 is valid, the frequency response for high frequencies and the transient response for short times are determined by $A/(1 + A)$. The frequency response for high frequencies is illustrated in Example 11.9 and the transient response for short times in Example 11.10.

EXAMPLE 11.9. In the integrator of Example 11.3,

$$A = \frac{100{,}000}{(1 + \mathrm{j}f/10\ \mathrm{Hz})(1 + \mathrm{j}f/1\ \mathrm{MHz})}$$

and feedback return $F_N = 1$.

According to Section 8.3.1, the piecewise linear approximation of the Bode plot for the resulting amplification, $|M_N|$, is obtained as the lesser of the piecewise linear approximations of $|A|$ and $|1/F_N|$. In this example, $|1/F_N| = 1$; also $|A| > 1$ for frequencies $f < 1$ MHz and $|A| = (1\ \mathrm{MHz}/f)^2$ for $f > 1$ MHz. Thus, $|M_N| = 1$ for $f < 1$ MHz and $|M_N| = (1\ \mathrm{MHz}/f)^2$ for $f > 1$ MHz.

EXAMPLE 11.10. In the integrator of Example 11.3, $M_{N,\mathrm{dc}} = A_{\mathrm{dc}}/(1 + A_{\mathrm{dc}}) \cong 1$. Also, A can be written

$$A = \frac{A_{\mathrm{dc}}}{(1 + \mathrm{j}f/f_1)(1 + \mathrm{j}f/f_2)},$$

where $f_1 = 10$ Hz, $f_2 = 1$ MHz, and $A_{\mathrm{dc}} = 100{,}000$.

According to the discussion following Example 8.12 (see page 140), the transients of Figure 6.14 are applicable with

$$m = \frac{A_{\mathrm{dc}} f_1}{M_{N,\mathrm{dc}} f_2} = \frac{(100{,}000)(10\ \mathrm{Hz})}{(1)(1\ \mathrm{MHz})} = 1,$$

$$\frac{L}{R} = \tau_2 = \frac{1}{2\pi f_2} = \frac{1}{2\pi(1\ \mathrm{MHz})} \cong 0.16\ \mu\mathrm{s},$$

and

$$RC = \frac{\tau_2}{m} \cong \frac{0.16\ \mu\mathrm{s}}{1} = 0.16\ \mu\mathrm{s}.$$

Hence, the $m = 1$ graph of Figure 6.14 is applicable with each division of t/RC corresponding to $0.16\ \mu$s. Also, there is an overshoot of about 15% on the transient, which is followed by a decaying ringing.

It is of interest to find a time $t_{\min}$ beyond which the transient is confined within a band of $1 \pm \varepsilon$. Equation 6.42a shows a multiplier of $e^{-t/2mRC}$ governing this decay. From this, as a rough approximation,

$$\varepsilon = e^{-t_{\min}/2mRC};$$

hence,

$$t_{\min} = 2mRC \ln \frac{1}{\varepsilon}.$$

For example, for $\varepsilon = 0.1\% = 0.001$,

$$t_{\min} = 2(1)(0.16\ \mu\mathrm{s}) \ln \frac{1}{0.001} \cong 2.2\ \mu\mathrm{s}.$$

11.3.3 The Overall Response

When Equation 11.10 is applicable, the overall transfer function is the product of two transfer functions: One of these was discussed in Section 11.3.1 and the other in Section 11.3.2. Also, the overall frequency response can be obtained by substituting $\mathrm{j}2\pi f$ for s in the overall transfer function.

Finding the overall transient response is more difficult because, in general, the overall transient response is *not* the product of the two individual transient responses. However, the overall transient response can be *approximated* as the product of the two individual transient responses for times when at least one of the two individual transient responses can be approximated by a constant.

EXAMPLE 11.11. In Example 11.6 of Section 11.3.1, for an input voltage of $V_{\mathrm{in}}(t) = \Phi_0 \delta(t)$,

$$V_{\mathrm{out}} = -\frac{\Phi_0}{1\ \mathrm{second}} e^{-t/9091\ \mathrm{seconds}}.$$

For times $t \ll 9091$ seconds, V_{out} can be approximated as $V_{\mathrm{out}} \cong -\Phi_0/1$ second. The fractional error ε committed by this approximation at times less than $t_{\max}$ is

$$\varepsilon = 1 - e^{-t_{\max}/9091\ \mathrm{seconds}},$$

which can be approximated for $t_{\max} \ll 9091$ seconds as

$$\varepsilon \cong \frac{t_{\max}}{9091\ \mathrm{seconds}};$$

hence,

$$t_{\max} \cong (\varepsilon)(9091\ \mathrm{seconds}).$$

For example, for $\varepsilon = 0.1\% = 0.001$,

$$t_{\max} \cong (0.001)(9091\ \mathrm{seconds}) \cong 9\ \mathrm{seconds}.$$

Hence, with an accuracy of 0.1 %, the transient response of Example 11.6 in Section 11.3.1 can be approximated by a constant for times less than about 9 seconds. Also, the transient response in Example 11.10 in Section 11.3.2 can be approximated by a constant for times greater than 2.2 microseconds. Thus, in this case it is true that at least one of the two transient responses can be approximated by a constant *at all times*: Within an error of 0.1 %, the transient response of Example 11.6 is constant for $t \leqslant 2.2\ \mu s$, both transient responses are constant for $2.2\ \mu s \leqslant t \leqslant 9$ s, and the transient response of Example 11.10 is constant for $t \geqslant 9$ s.

Thus, in the integrator discussed in Examples 11.6 and 11.10, the overall transient response can be approximated as the product of the two individual transient responses.

Thus far, it has been assumed that an integrator remains within its linear region of operation. However, this is not always the case, especially when V_{in} is a narrow pulse with a high peak voltage (over 100 volts) that can be delivered by some transducers.

The output impedance of an operational amplifier includes an inductive component and, as a result, capacitance C_F cannot protect the negative input of the operational amplifier from large voltage excursions in Figure 11.5. If the maximum input voltage rating of the operational amplifier is exceeded, even for a short time, this may result in a large input current and hence in a loss of charge and in an incorrect output. However, the situation is alleviated by a nonzero capacitance C_I (not shown in Figure 11.5) between the negative input of the operational amplifier and ground.

EXAMPLE 11.12. The integrator of Example 11.3 includes a $C_I = 10$ pF. Input voltage V_{in} is a pulse of 100 V for a duration of 100 ns. Assuming that the output of the operational amplifier can be approximated as an open circuit for such a short time, the entire charge delivered through the $R_I = 1\ \text{M}\Omega$ resistor goes into C_I. By assuming (subject to later verification) that the voltage across C_I always remains much less than 100 V, at the end of the 100-ns pulse this voltage can be approximated as

$$\frac{(100\ \text{V})(100\ \text{ns})}{(1\ \text{M}\Omega)(10\ \text{pF})} = 1\ \text{V}.^*$$

This is less than the maximum input voltage rating of the operational amplifier, and output voltage V_{out} will settle (within roughly 10 microseconds) to the correct value of

$$-\frac{(100\ \text{V})(100\ \text{ns})}{(1\ \text{M}\Omega)(1\ \mu\text{F})} = -10\ \mu\text{V}.$$

---

*The exact value of the voltage is $100\ \text{V}(1 - e^{-100\ \text{ns}/[(1\ \text{M}\Omega)(10\ \text{pF})]}) = 0.995$ V.

11.4 Differentiator Circuits

A differentiator provides an approximation of the time derivative of the input voltage; that is, V_{out} is of the form $V_{out} = \tau_L dV_{in}/dt$. The transfer function corresponding to this is $s\tau_L$ and the corresponding frequency response is $j2\pi\tau_L f$. Clearly, these are not realizable because they require an amplification that increases without bound for increasing frequency f. For this reason, practical realizations provide transfer functions in the forms $s\tau_L/(1 + s\tau_A)$, $s\tau_L/[(1 + s\tau_A)(1 + s\tau_B)]$, and so on, where *parasitic time constants* τ_A and τ_B are much smaller than *differentiating time constant* τ_L.

EXAMPLE 11.13. A Type 9914A wideband hybrid operational amplifier is characterized by $A_{dc} = 5000$, $f_1 = 0.5$ MHz, and $f_2 = 50$ MHz. It is used in the differentiator circuit shown in Figure 11.6 with $1/2\pi RC = 25$ Hz.

It can be shown (see Problem 11.34) that the resulting frequency response can be approximated as

$$\frac{V_{out}(f)}{V_{in}(f)} = \frac{-f/25\ \text{Hz}}{(1 + f/250\ \text{kHz})^2}$$

and the resulting transfer function as

$$\frac{\mathscr{L}\{V_{out}(t)\}}{\mathscr{L}\{V_{in}(t)\}} = \frac{-s(6.4\ \text{ms})}{[1 + s(0.64\ \mu\text{s})]^2}.$$

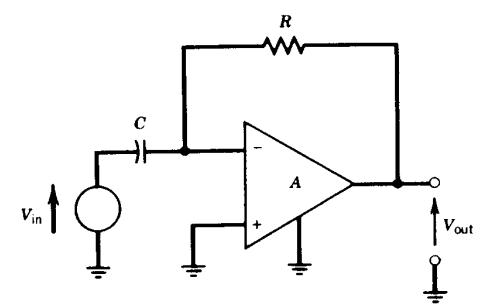

FIGURE 11.6 Differentiator circuit using an operational amplifier.

Another approach provides V_{out} = constant $\cdot(1 + \tau_L dV_{in}/dt)$, with a corresponding transfer function of constant $\cdot(1 + s\tau_L)$ and a corresponding frequency response of constant $\cdot(1 + j2\pi\tau_L f)$. Again, these are not realizable, and practical realizations provide transfer functions in the form $(1 + s\tau_L)/(1 + s\tau_A)$, $(1 + s\tau_L)/[(1 + s\tau_A)(1 + s\tau_B)]$, and so on, where parasitic time constants τ_A and τ_B are much smaller than differentiating time constant τ_L.*

EXAMPLE 11.14. Example 8.33 described a voltage follower circuit using a Type 2539 wideband monolithic operational amplifier. Lag–lead compensation was used with $f_L = 2$ MHz and $f_U = 21$ MHz. This resulted in a transfer function of

$$\frac{\mathscr{L}\{V_{out}(t)\}}{\mathscr{L}\{V_{in}(t)\}} = M_{N,dc}\frac{1 + s\tau_L}{(1 + s\tau_A)^3(1 + s\tau_B)}$$

with $M_{N,dc} \cong 1$, $\tau_L \cong 80$ ns, $\tau_A \cong 2.5$ ns, and $\tau_B \cong 0.4$ ns.

Thus, this circuit can be used as a differentiator with the differentiating time constant of 80 ns and with the four parasitic time constants of 2.5 ns, 2.5 ns, 2.5 ns, and 0.4 ns.

Differentiator circuits are often used in feedback systems for alleviating the effects of unavoidable slow time constants that introduce a transfer function in the form $1/(1 + s\tau_{slow})$. Such a transfer function may be cancelled, and time constant τ_{slow} may be replaced by faster time constants by use of a differentiator circuit.

EXAMPLE 11.15. A feedback system includes a power amplifier that is characterized by the transfer function constant/$(1 + s\tau_{slow})$ where time constant $\tau_{slow} = 80$ ns. To enhance the stability of the system, the differentiator described in Example 11.14 is inserted in the signal path. This results in a transfer function

$$\frac{\text{constant}}{1 + s\tau_{slow}}\frac{1 + s\tau_L}{(1 + s\tau_A)^3(1 + s\tau_B)}$$

with $\tau_{slow} = 80$ ns, $\tau_L = 80$ ns, $\tau_A = 2.5$ ns, and $\tau_B = 0.4$ ns. Since $\tau_L = \tau_{slow}$, the transfer function becomes

$$\frac{\text{constant}}{(1 + s\tau_A)^3(1 + s\tau_B)}.$$

Thus, the introduction of the differentiator replaced the $\tau_{slow} = 80$ ns time constant by the four time constants of 2.5 ns, 2.5 ns, 2.5 ns, and 0.4 ns.

*The effect of the 1 in the numerator can be cancelled by a subtraction (not discussed here).

11.5 Nonlinear Circuits

Operational amplifiers may also be used in conjunction with nonlinear components such as diodes and transistors. The nonlinear properties of bipolar transistors are used in an exponential amplifier in Example 11.16.

EXAMPLE 11.16. The collector current I_C of a bipolar transistor is an exponential function of base-emitter voltage V_{BE}; that is, I_C = constant $\cdot e^{V_{BE}/V_T}$, where V_T is a constant. An *exponential amplifier* with input voltage V_{in} and output voltage V_{out} is built by applying V_{in} as V_{BE}, using a voltage follower, and by converting I_C to a proportional output voltage V_{out}, using the current input amplifier of Figure 11.1.

Operational amplifiers may also be used to convert a nonlinear function to another nonlinear function. This is illustrated for a *logarithmic amplifier* in Example 11.17.

EXAMPLE 11.17. Figure 11.7 shows a logarithmic amplifier that consists of operational amplifier A and of exponential amplifier B. The latter is characterized by $V_2 = V_K e^{V_1/V_T}$, where V_K and V_T are constants. It can be shown (see Problem 11.36) that this results in $V_{out} \cong V_T \ln(V_{in}/V_K)$ when amplification $A \cong \infty$.

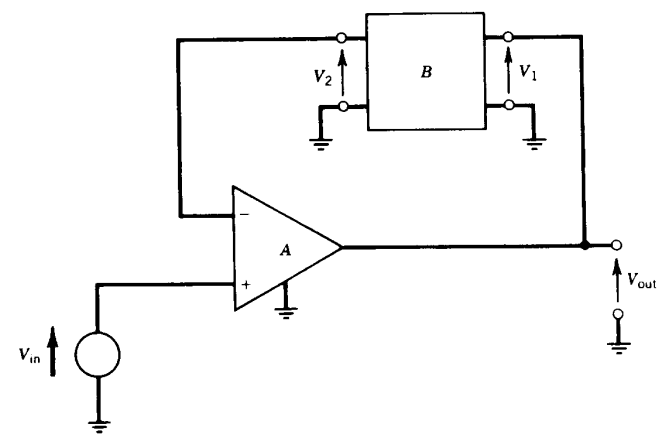

FIGURE 11.7 Logarithmic amplifier circuit using operational amplifier A and exponential amplifier B.

PROBLEMS

11.1 Verify Equations 11.1a–d and 11.2a,b by writing loop and node equations in Figure 11.1 and by noting that $V_{out} = -AV_n$.

11.2 Expand the circuit of Figure 11.1 by including a resistor R_p in series with the positive (+) input of the operational amplifier. Show that this eliminates the effects of the input bias currents, but not the effects of the input offset current, when $R_p = R_F R_I/(R_F + R_I)$.

11.3 Verify Equations 11.3a–d and 11.4 by writing loop and node equations or by using results from Section 6.3.

11.4 Derive Equation 11.5b from Equations 11.3a–d, 11.4, and 11.5a.

11.5 Verify the results of Example 11.1 by use of Examples 8.25 and 8.26 and Problem 8.77 of Chapter 8.

11.6 Verify the results of Example 11.2.

11.7 Derive Equation 11.6. [*Hint:* Replace the series combination of V_1 and R_1 by the parallel combination of R_1 and a current source of V_1/R_1; repeat for V_2 and R_2, and V_3 and R_3. Then use Equation 11.1d.]

11.8 Derive Equations 11.7a–c. [*Hint:* Replace the series combination of V_1 and R_1 by the parallel combination of R_1 and a current source of V_1/R_1; repeat for V_2 and R_2, and V_3 and R_3. Then use Equation 11.1d.]

11.9 Verify Equation 11.8.

***11.10** Derive Equations 11.11a and 11.11b as follows:

(a) Use Equation 11.9 and bring both the exact Equation 11.8 and the approximate Equation 11.10 to the form constant/$(s^3 + ps^2 + qs + r)$.

(b) Show that the coefficients r are identical in the two equations.

(c) Show that $|(p_{approximate} - p_{exact})/p_{exact}|$ equals the left side of Equation 11.11a.

(d) Show that $|(q_{approximate} - q_{exact})/q_{exact}|$ equals the left side of Equation 11.11b.

11.11 Show that Equations 11.11a and 11.11b can be approximated by Equation 11.12 when $R_I/R_F \ll 1$.

11.12 Verify Equations 11.13a,b and 11.14a,b.

*Optional problems.

***11.13** Show that the approximation of Equation 11.10 is also valid when

$$A = \frac{A_{dc}}{(1 + s\tau_1)(1 + s\tau_2)(1 + s\tau_3)}$$

and when the conditions of Equations 11.11a and 11.11b are replaced by

$$\frac{1}{1 + \dfrac{R_I}{R_F} + \dfrac{\tau_1 + \tau_2 + \tau_3}{\dfrac{\tau_1\tau_2 + \tau_1\tau_3 + \tau_2\tau_3}{\dfrac{1}{R_I C_F}}}} \ll 1$$

and

$$\frac{1}{1 + \dfrac{R_I}{R_F} + (A_{dc} + 1)\dfrac{R_I C_F}{\tau_1 + \tau_2 + \tau_3}} \ll 1.$$

[*Hint:* Proceed as in Problem 11.10: Show that the coefficients of the constant and the s^4 terms are equal in the exact and the approximate denominators, and show that the condition originating from the s^3 terms is not constraining because the $|\varepsilon|$ resulting from it is always less than the $|\varepsilon|$ resulting from the s^2 terms.]

11.14 Verify that for $f_1 \ll f_2$ and $f_1 \ll f_3$, that is, for $\tau_1 \gg \tau_2$ and $\tau_1 \gg \tau_3$, the conditions given in Problem 11.13 for $A = A_{dc}/[(1 + s\tau_1)(1 + s\tau_2)(1 + s\tau_3)]$ become

$$\frac{1}{1 + \dfrac{R_I}{R_F} + \dfrac{R_I C_F}{\tau_2 + \tau_3}} \ll 1$$

and

$$\frac{1}{1 + \dfrac{R_I}{R_F} + (A_{dc} + 1)\dfrac{R_I C_F}{\tau_1}} \ll 1.$$

Compare these conditions with those of Equations 11.13a and 11.13b.

11.15 Expand the integrator circuit of Figure 11.5 by including a capacitance C_I between the negative (−) input of the operational amplifier and ground.

(a) Show that the resulting transfer function can be written

$$\frac{\mathscr{L}\{V_{out}(t)\}}{\mathscr{L}\{V_{in}(t)\}} = \frac{-A}{1 + (A + 1)\dfrac{R_I}{R_F} + sAR_I C_F + sR_I(C_F + C_I)}.$$

(b) Verify that the transfer function of (a) above reverts to the $C_I = 0$ case of Equation 11.8 when $C_I \ll C_F$.

11.16 Verify the results of Example 11.3.

11.17 Verify the results of Example 11.4.

11.18 Verify Equation 11.16.

11.19 Verify Equation 11.18a by using (but not proving) the approximation $e^{-x} \cong 1 - x$ for $0 \leqslant x \ll 1$.

***11.20** Show that the exponential function e^{-x} can be expanded as $e^{-x} = 1 - x + \Delta_1$, where $|\Delta_1| < x^2/2$ when $0 \leqslant x < 1$. Use the following steps:

(a) Write the series expansion of the exponential function as

$$e^{-x} = 1 - x + \frac{x^2}{2} - \Delta_{\text{series}}.$$

(b) Note that

$$\Delta_{\text{series}} = \frac{x^3}{2 \cdot 3} - \frac{x^4}{2 \cdot 3 \cdot 4} \pm \cdots$$

(c) Verify that the magnitudes of the terms diminish in Δ_{series} of (b) above.

(d) Note that the series expansion given in (a) is *absolutely convergent*; therefore (c) above implies that $0 < \Delta_{\text{series}} < x^3/6$.

(e) Verify that, based on the above, the series of (a) can be written

$$e^{-x} = 1 - x + \Delta_1,$$

where $|\Delta_1| < x^2/2$ when $0 \leqslant x < 1$.

(f) Note that both $|\Delta_{\text{series}}|$ and $|\Delta_1|$ represent error magnitudes and *not fractional* errors.

11.21 Verify the results of Example 11.5.

11.22 Verify Equation 11.21.

11.23 Verify Equation 11.22a by using (but not proving) the approximation $e^{-x} \cong 1$ for $0 \leqslant x \ll 1$.

***11.24** Show that the exponential function e^{-x} can be expanded as $e^{-x} = 1 - \Delta_0$, where $|\Delta_0| < x$ when $0 \leqslant x < 1$. [*Hint:* Consider the process used in Problem 11.20 and alter it as required.]

11.25 Verify the results of Example 11.6.

11.26 Verify Equation 11.25a for $V_{\text{in}}(t) = V_0 u(t)$ and $V_{\text{in}}(t) = \Phi_0 \delta(t)$. Compare with Equations 11.18a and 11.22a.

***11.27** Provide a support, but not a proof, of Equation 11.25a for any input $V_{\text{in}}(t)$ as follows:

(a) Show that Equation 11.15a can be written

$$\frac{\mathscr{L}\{V_{\text{out}}(t)\}}{\mathscr{L}\{V_{\text{in}}(t)\}} = -\frac{|M_{\text{dc}}|}{1 + s|M_{\text{dc}}|R_I C_F},$$

where $|M_{\text{dc}}|$ is defined by Equation 11.17.

(b) Consider that, in a way, large values of s correspond to small values of t, and show that the result of (a) above can be approximated as

$$\frac{\mathscr{L}\{V_{\text{out}}(t)\}}{\mathscr{L}\{V_{\text{in}}(t)\}} \cong -\frac{1}{sR_I C_F}$$

provided that $|sM_{\text{dc}}R_I C_F| \gg 1$.

(c) Note that the condition in (b) above is not easy to evaluate because Laplace transform variable s is complex. However, if s is replaced by $1/t$ (*without any proof*), then for $t > 0$ this results in

$$t \ll |M_{\text{dc}}|R_I C_F.$$

(d) Verify that the condition of (c) above is identical to those of Equations 11.18b, 11.22b, and 11.25b.

(e) Verify that the transfer function in (b) above represents integration with a scale factor of $-1/R_I C_F$.

11.28 Verify the result of Example 11.8. [*Hint:* Introduce a variable x defined as $x \equiv \cot^2 \varphi_M$, find x, and express phase margin φ_M as $\varphi_M = \text{arccot} \sqrt{x}$.]

11.29 Verify the results of Example 11.9.

11.30 Verify the results of Example 11.10.

11.31 Verify the results of Example 11.11.

11.32 Verify the results of Example 11.12.

***11.33** Show that the output voltage in Example 11.12 settles to its correct value of $-10\,\mu$V with an accuracy of 0.01 % in about 6.6 μs. [*Hint:* Use the equation for $t_{\min}$ given in Example 11.10.]

***11.34** Derive the results of Example 11.13 as follows.

(a) Show that

$$\frac{\mathscr{L}\{V_{\text{out}}(t)\}}{\mathscr{L}\{V_{\text{in}}(t)\}} = \frac{-sRCA_{\text{dc}}}{(1 + sRC)(1 + s\tau_1)(1 + s\tau_2) + A_{\text{dc}}},$$

where $\tau_1 = 1/[2\pi(0.5\text{ MHz})]$ and $\tau_2 = 1/[2\pi(50\text{ MHz})]$.

(b) Verify that, since $\tau_2 \ll \tau_1 < RC$, the result of (a) above can be approximated as

$$\frac{\mathscr{L}\{V_{out}(t)\}}{\mathscr{L}\{V_{in}(t)\}} = -sRC\frac{A_{dc}}{(1 + sRC)(1 + s\tau_1) + A_{dc}}.$$

(c) Verify that the fraction on the right in (b) above equals the right side of Equation 8.42 with $F_{N,dc} = 1$ and with τ_2 replaced by RC.

(d) Verify that the result of (c) above also equals Equation 8.43a with $M_{N,dc} \cong 1$, and that Equations 8.43b, 8.43c, and 8.43d are applicable with τ_2 replaced by RC.

(e) Show that Equation 8.43d becomes $m \cong 0.25$, and that Equations 8.43b and 8.43c lead to $\tau_A \cong \tau_B \cong 2\tau_1$.

(f) Substitute $M_{N,dc} = 1$ and the results of (e) above into the right side of Equation 8.43a.

(g) Note that the result of (f) above equals the fraction on the right side in (b) above.

11.35 A Type 9914A wideband hybrid operational amplifier is characterized by $A_{dc} = 5000$, $f_1 = 0.5$ MHz, and $f_2 = 50$ MHz. It is used as a voltage follower with lag–lead compensation; that is, $F_N = (1 + jf/f_U)/(1 + jf/f_L)$, where $f_L = 37$ kHz and $f_U = 5.5$ MHz.

(a) Sketch a piecewise linear approximation of the Bode plot for $|AF_N|$.

*(b) Show that the resulting transfer function of the voltage follower can be approximated as

$$\frac{\mathscr{L}\{V_{out}(t)\}}{\mathscr{L}\{V_{in}(t)\}} = \frac{1 + s(4.3\ \mu s)}{[1 + s(9.5\ ns)]^3}.$$

[*Hint:* Use the results of Section 8.3.3.]

(c) The voltage follower is inserted into the signal path of a feedback system that includes a power amplifier with a transfer function of $1/[1 + s(4.3\ \mu s)]$. Use the transfer function given in (b) above and verify that the overall transfer function is $1/[1 + s(9.5\ ns)]^3$; that is, the 4.3-μs time constant of the power amplifier is replaced by three time constants of 9.5 ns each.

11.36 Derive the equation for V_{out} given in Example 11.17 for an operational amplifier with an amplification A that can be approximated as $A = \infty$. [*Hint:* Note that an amplification $A = \infty$ implies zero voltage between the positive and negative input terminals of an operational amplifier.]

CHAPTER 12

Internal Structure

This chapter outlines three important circuits used in operational amplifiers: input stages, current mirrors, and output stages. Although present technology permits elaborate circuits, only the simplest circuits are discussed here.

12.1 Input Stages

Figure 12.1 shows the circuit diagram of a simple input stage. The positive and negative inputs, V_p and V_n, of the operational amplifier are connected to the bases of *npn* transistors Q_1 and Q_2. The emitters of the transistors are connected together and they share dc current I_{dc}; details of current source I_{dc} are described in Section 12.2. The collectors of the transistors are connected to the positive power supply, V_+, through resistors R_{C1} and R_{C2} and through balance adjustment potentiometer $R_{balance}$.

Current I_{dc} splits evenly between Q_1 and Q_2 when $V_p = V_n$, $R_{C1} = R_{C2}$, and when Q_1 and Q_2 are identical and $R_{balance}$ is set at its center. In this ideal case, each emitter carries a current of $I_{dc}/2$, each collector a current of $(I_{dc}/2)h_{FE}/(1 + h_{FE})$, and each base a current of $(I_{dc}/2)/(1 + h_{FE})$, where h_{FE} is the current gain of the transistor.

The input bias current, I_B, of the operational amplifier equals the base current; thus,

$$I_B = \frac{I_{dc}/2}{1 + h_{FE}}. \tag{12.1}$$

EXAMPLE 12.1 The circuit of Figure 12.1 uses two identical transistors with $h_{FE} = 100$; also, $I_{dc} = 10$ mA. Transistors Q_1 and Q_2 are identical and the circuit, all voltages, and all currents are symmetrical. Thus, the input bias current of the operational amplifier is, from Equation 12.1,

$$I_B = \frac{I_{dc}/2}{1 + h_{FE}} = \frac{10\ mA/2}{1 + 100} \cong 49.5\ \mu A.$$

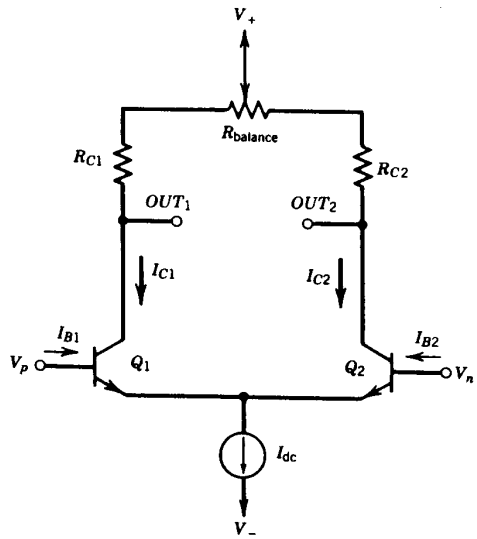

FIGURE 12.1 Circuit diagram of a simple input stage.

When the circuit is not symmetrical, a nonzero input offset current I_{offset} may result:

$$I_{offset} = |I_{B1} - I_{B2}|. \tag{12.2}$$

EXAMPLE 12.2 The positive and negative input voltages, V_p and V_n, are identical in Figure 12.1; also, $I_{dc} = 10$ mA and the current gain of each transistor is $h_{FE} = 100$. Because of asymmetries in Q_1 and Q_2, the emitter of Q_1 carries a current of 4 mA and the emitter of Q_2 a current of 6 mA. Thus, the input offset current becomes

$$I_{offset} = |I_{B1} - I_{B2}| = \left|\frac{4\text{ mA}}{1+100} - \frac{6\text{ mA}}{1+100}\right| \cong 19.8\ \mu\text{A}.$$

The output voltages of the input stage are available for further use at points OUT_1 and OUT_2 in Figure 12.1. They are developed as voltage drops across resistors R_{C1} and R_{C2} and portions of balance adjustment potentiometer $R_{balance}$. This potentiometer is replaced by short-circuits in the simplest operational amplifiers, it can be connected externally in others, and it is internal in some advanced operational amplifiers (in the form of a resistor network that is individually trimmed as a last step of the manufacturing process).

The purpose of potentiometer $R_{balance}$ is to zero out any nonzero input offset voltage V_{offset} of the operational amplifier. This is preferable to offsetting one of the inputs, in which case there would remain a temperature coefficient of approximately

$$\frac{dV_{offset}}{dT} \cong \frac{V_{offset}}{T}, \tag{12.3}$$

where T is the absolute temperature in °K, about 273°C above the temperature expressed in degrees centigrade (°C). Note that a difference of 1°K equals a difference of 1°C.

EXAMPLE 12.3 An operational amplifier has an input offset voltage of $V_{offset} = 6$ mV that is zeroed out at one of the inputs of the operational amplifier. Thus, the output voltage of the operational amplifier is zero at the temperature where the zeroing was performed, which is approximately 27°C; hence, $T \cong 273°\text{C} + 27°\text{C} = 300°\text{K}$. However, there remains a temperature coefficient that, from Equation 12.3, is

$$\frac{dV_{offset}}{dT} \cong \frac{V_{offset}}{T} = \frac{6\text{ mV}}{300°\text{K}} = 20\ \mu\text{V/°K} = 20\ \mu\text{V/°C}.$$

If, for example, the temperature changes by 10°C, there will appear an input offset voltage of (10°C)(20 μV/°C) = 0.2 mV.

Note that the inclusion of potentiometer $R_{balance}$ does not completely eliminate the temperature coefficient of the input offset voltage, because there remains the temperature coefficient of the second stage of the operational amplifier. However, the effect of this is reduced by the amplification of the first stage, which is usually at least 100.

12.2 Current Mirrors

Figure 12.2 shows the circuit diagram of a simple current mirror using two identical *npn* transistors Q_1 and Q_2; current mirrors are also built using *pnp* transistors. It is now shown that, with the directions of currents as in Figure 12.2, I_{out} approximately equals I_{in} as long as the external load connected to output OUT is such that $V_{C2} \geqslant V_B$.

The emitters of both Q_1 and Q_2 are connected to V_E, which is usually a power supply voltage. The bases of Q_1 and Q_2 are connected together and they settle to a voltage of V_B, which is about 0.7 V higher than V_E. The collector of Q_1 is also connected to V_B, thus this transistor operates with a collector-emitter voltage of about 0.7 V. The collector of Q_2 is connected to output OUT. The design of transistors Q_1 and Q_2 is such that the collector-emitter voltage does not have much influence on the collector current, as long as it is at least 0.7 V.

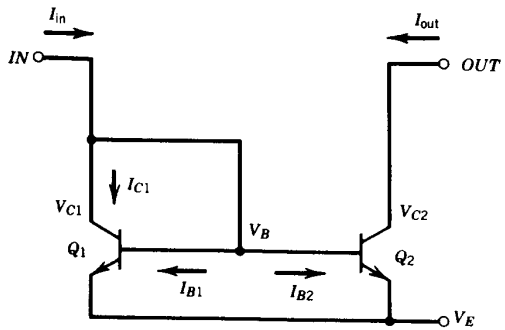

FIGURE 12.2 Circuit diagram of a simple current mirror.

Thus,

$$I_{out} \cong I_{C1} \tag{12.4}$$

in Figure 12.2 as long as $V_{C2} \geqslant V_B$, because Q_1 and Q_2 are identical. For the same reason,

$$I_{B1} = I_{B2}, \tag{12.5}$$

and also

$$I_{C1} = h_{FE} I_{B1} \tag{12.6a}$$

and

$$I_{out} = h_{FE} I_{B2}, \tag{12.6b}$$

where h_{FE} is the current gain of Q_1 and of Q_2.
Furthermore, a node equation can be written for node V_B:

$$I_{in} = I_{C1} + I_{B1} + I_{B2}. \tag{12.7}$$

It can be shown (see Problem 12.3) that Equations 12.4–12.7 can be combined as

$$I_{out} \cong \frac{I_{in}}{1 + \dfrac{2}{h_{FE}}}. \tag{12.8}$$

Thus, I_{out} is close to I_{in} when h_{FE} is large. This can also be seen in Figure 12.2, where the base-emitter voltages of Q_1 and Q_2 are equal; hence, $I_{out} \cong I_{in}$ when the base currents are negligibly small.

Therefore, the insertion of a current mirror circuit between a source (generator) and a load reverses (inverts) the direction of the current through the load from the direction without the current mirror. Consider, for example, a current that flows from the source *into* the load without a current mirror. If a current mirror circuit is now inserted between the source and the load, the current from the source flows into the current mirror circuit, and a current with an approximately equal magnitude flows *out of* the load.

EXAMPLE 12.4 Output *OUT* in Figure 12.2 is loaded such that $V_{C2} \geqslant V_B$; hence, Equation 12.8 is applicable.

(a) If $h_{FE} = 100$, which is common for *npn* transistors, then, from Equation 12.8,

$$\frac{I_{out}}{I_{in}} \cong \frac{1}{1 + \dfrac{2}{h_{FE}}} = \frac{1}{1 + \dfrac{2}{100}} \cong 0.98,$$

a loss of 2%.

(b) If $h_{FE} = 10$, which is common for *pnp* transistors in some processes, then, from Equation 12.8,

$$\frac{I_{out}}{I_{in}} \cong \frac{1}{1 + \dfrac{2}{h_{FE}}} = \frac{1}{1 + \dfrac{2}{10}} \cong 0.83,$$

a loss of 17%.

Figure 12.3 illustrates the use of a current mirror for generating I_{dc} in the input stage of Figure 12.1, which is only partially shown. The voltage across resistor R_1 is about 14.3 V and current I_{dc} is in the vicinity of 14.3 V/R_1.

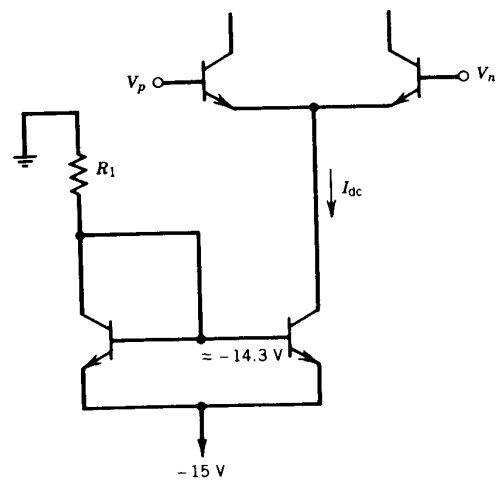

FIGURE 12.3 Use of a current mirror for generating I_{dc} in Figure 12.1.

Figure 12.4 illustrates the use of a current mirror for signal inversion in the input stage of Figure 12.1. Current $I_{mirror} \cong I_{C1}$ flows *into* node A in Figure 12.4. (Note that a direct connection of the left collector to node OUT would make I_{C1} flow *out of* node OUT and would result in a useless circuit.)

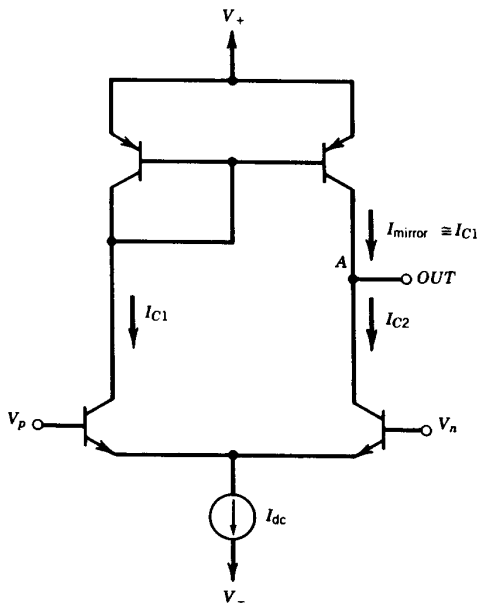

FIGURE 12.4 Use of a current mirror for signal inversion.

Figure 12.5 shows a current mirror with two outputs. It can be shown (see Problem 12.5) that when OUT_1 and OUT_2 are at least 0.7 V above V_E,

$$I_{out,1} \cong I_{out,2} \cong \frac{I_{in}}{1 + \frac{3}{h_{FE}}}. \tag{12.9}$$

Figure 12.6 illustrates the use of a two-output current mirror in the input stage of Figure 12.1. The *FEEDBACK* signal is derived from subsequent circuitry not shown, and it sets the dc operating points of OUT_1 and OUT_2.

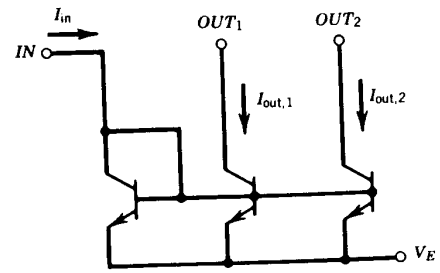

FIGURE 12.5 A current mirror with two outputs.

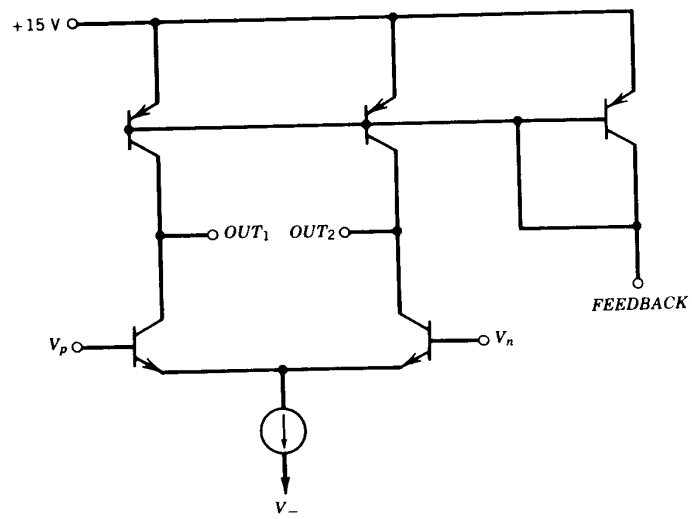

FIGURE 12.6 Use of a current mirror with two outputs.

Note that neither Figure 12.4 nor Figure 12.6 has a provision for zeroing out input offset voltage V_{offset}, as was done by $R_{balance}$ in Figure 12.1. However, the balancing feature can be incorporated in either circuit by the inclusion of additional circuitry. One way of doing this is to use two of the current mirrors of Figure 12.2. Output OUT of one current mirror is connected to the left collectors and output OUT of the other current mirror to the right collectors.

The V_E terminals of both current mirrors are connected to a negative power supply voltage, as in Figure 12.3. Also, input *IN* of each current mirror is connected to ground via a resistor, and zeroing is performed by varying one of these resistors (see Problem 12.6).

12.3 Output Stages

Figure 12.7 shows an output stage using complementary *npn* and *pnp* transistors. Output transistors Q_3 and Q_4 are capable of delivering high currents with both polarities: *npn* transistor Q_3 can provide a high current flowing *out* of the circuit and *pnp* transistor Q_4 can provide a high current flowing *into* the circuit.

Transistors Q_1 and Q_2 provide level shifting. The circuit is designed such that the base-emitter voltage drops of Q_1 and Q_4 are equal, and also the base-emitter voltage drops of Q_2 and Q_3 are equal.

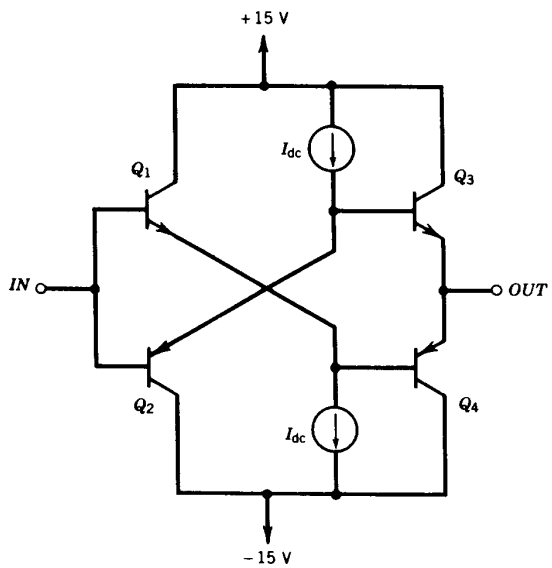

FIGURE 12.7 An output stage using *npn* and *pnp* transistors.

PROBLEMS

12.1 The circuit of Figure 12.1 uses two identical transistors with $h_{FE} = 200$, also, $I_{dc} = 0.1$ mA. Find the input bias current.

12.2 An operational amplifier has an input offset voltage $V_{offset} = 3$ mV which is zeroed out at one of the inputs of the operational amplifier. Find the input offset voltage for a temperature change of 10°C.

12.3 Derive Equation 12.8 from Equations 12.4–12.7. [*Hint:* Express I_{B1} from Equation 12.6a and I_{B2} from Equation 12.6b; substitute them into Equation 12.7. Express I_{C1} from the result and substitute it into Equation 12.4.]

12.4 Find I_{out}/I_{in} in the current mirror circuit of Figure 12.2 if $V_{C2} > V_B$ and $h_{FE} = 5$.

12.5 Derive Equation 12.9 by writing equations similar to Equations 12.4–12.7 and manipulating them as in Problem 12.3.

12.6 Incorporate input offset voltage balancing in Figure 12.4 by adding two current mirrors. Sketch a complete circuit diagram.

APPENDIX A

Mathematical Equations

This appendix provides a short summary of the mathematical equations that are frequently used in this book: quadratic equations, cubic equations, and Laplace transform pairs.

A.1 Quadratic Equations

Any quadratic equation may be reduced to the form

$$ax^2 + bx + c = 0.$$

Then

$$x = \frac{-b \pm \sqrt{b^2 - 4ac}}{2a}.$$

If a, b, and c are real then:
If $b^2 - 4ac$ is positive, the roots are real and unequal.
If $b^2 - 4ac$ is zero, the roots are real and equal.
If $b^2 - 4ac$ is negative, the roots are complex and unequal.

A.2 Cubic Equations

Any cubic equation,

$$y^3 + py^2 + qy + r = 0$$

may be reduced to the form

$$x^3 + ax + b = 0$$

by substituting for y the value,

$$y = x - \frac{p}{3}.$$

Also,

$$a = \frac{1}{3}(3q - p^2)$$

and

$$b = \frac{1}{27}(2p^3 - 9pq + 27r).$$

For solution, define

$$A \equiv \sqrt[3]{-\frac{b}{2} + \sqrt{\frac{b^2}{4} + \frac{a^3}{27}}}$$

and

$$B \equiv \sqrt[3]{-\frac{b}{2} - \sqrt{\frac{b^2}{4} + \frac{a^3}{27}}},$$

then the three values of x are given by

$$x = A + B,$$

$$x = -\frac{A+B}{2} + \frac{A-B}{2}\sqrt{-3},$$

and

$$x = -\frac{A+B}{2} - \frac{A-B}{2}\sqrt{-3}.$$

If p, q, r are real, then:

If $\frac{b^2}{4} + \frac{a^3}{27} > 0$, there is one real root and two conjugate complex roots.

If $\frac{b^2}{4} + \frac{a^3}{27} = 0$, there are three real roots of which at least two are equal.

If $\frac{b^2}{4} + \frac{a^3}{27} < 0$, there are three real and unequal roots.

A.3 Laplace Transform Pairs

$f(t)$ for $t > 0$	$\mathscr{L}\{f(t)\}$
$\delta(t-a)$	e^{-as}
1	$\frac{1}{s}$
e^{-at}	$\frac{1}{s+a}$
te^{-at}	$\frac{1}{(s+a)^2}$
$e^{-bt} - e^{-at}$	$\frac{a-b}{(s+a)(s+b)}$
$ae^{-at} - be^{-bt}$	$\frac{(a-b)s}{(s+a)(s+b)}$
$(c-b)e^{-at} + (a-c)e^{-bt} + (b-a)e^{-ct}$	$\frac{(a-b)(b-c)(c-a)}{(s+a)(s+b)(s+c)}$
$1 - \left[\frac{bce^{-at}}{(b-a)(c-a)} + \frac{ace^{-bt}}{(a-b)(c-b)} + \frac{abe^{-ct}}{(a-c)(b-c)}\right]$	$\frac{abc}{s(s+a)(s+b)(s+c)}$
$e^{-at} - [1-(a-b)t]e^{-bt}$	$\frac{(a-b)^2}{(s+a)(s+b)^2}$
$1 - \frac{b^2e^{-at}}{(a-b)^2} - \left(\frac{a(a-2b)}{(a-b)^2} + \frac{abt}{a-b}\right)e^{-bt}$	$\frac{ab^2}{s(s+a)(s+b)^2}$
$1 - e^{-at}$	$\frac{a}{s(s+a)}$
$(1-at)e^{-at}$	$\frac{s}{(s+a)^2}$
$\frac{t^{n-1}e^{-at}}{(n-1)!}$	$\frac{1}{(s+a)^n}$
$1 - e^{-at}\left(1 + \frac{at}{1!} + \cdots + \frac{(at)^n}{n!}\right)$	$\frac{a^{n+1}}{s(s+a)^{n+1}}$
$a - b - ae^{-bt} + be^{-at}$	$\frac{ab(a-b)}{s(s+a)(s+b)}$

APPENDIX B

Derivations

This appendix provides details of derivations that are too extensive to be included in the main text.

B.1 Proof of Equations 6.31a–e

In this section, the validity of Equations 6.31a–e is demonstrated. Specifically, it is shown that the magnitudes of the fractional errors of τ_L and τ_U of Equations 6.31c and 6.31d are always less than R_2/R_1.

The fractional error ε of a time constant τ can be written

$$\varepsilon = \frac{\tau_{\text{approximate}} - \tau_{\text{exact}}}{\tau_{\text{exact}}}, \tag{B.1a}$$

which can be rearranged as

$$\varepsilon = \frac{\tau_{\text{approximate}}}{\tau_{\text{exact}}} - 1. \tag{B.1b}$$

To find the fractional error ε_L of time constant τ_L, the approximate τ_L from Equation 6.31c has to be substituted for $\tau_{\text{approximate}}$ in Equations B.1a and B.1b, and the exact τ_L from Equation 6.30c has to be substituted for τ_{exact} in Equations B.1a and B.1b.

Thus, Equation B.1b becomes

$$\varepsilon_L = R_1(C_1 + C_2)\frac{R_1C_1 + R_1C_2 + R_2C_2}{2R_1C_1R_2C_2} \times \left(1 - \sqrt{1 - \frac{4R_1C_1R_2C_2}{(R_1C_1 + R_1C_2 + R_2C_2)^2}}\right) - 1. \tag{B.2}$$

Now it is determined whether ε_L is positive, zero, or negative, that is, whether in the equation

$$\varepsilon_L \gtreqless 0 \tag{B.3}$$

the top sign ($>$), the center sign ($=$), or the bottom sign ($<$) is valid.

By substitution of Equation B.2, Equation B.3 becomes

$$R_1(C_1 + C_2)\frac{R_1C_1 + R_1C_2 + R_2C_2}{2R_1C_1R_2C_2} \times \left(1 - \sqrt{1 - \frac{4R_1C_1R_2C_2}{(R_1C_1 + R_1C_2 + R_2C_2)^2}}\right) - 1 \gtreqless 0. \tag{B.4}$$

Equation B.4 can be rearranged as

$$1 - \frac{1}{R_1(C_1 + C_2)}\frac{2R_1C_1R_2C_2}{R_1C_1 + R_1C_2 + R_2C_2} \gtreqless \sqrt{1 - \frac{4R_1C_1R_2C_2}{(R_1C_1 + R_1C_2 + R_2C_2)^2}}. \tag{B.5}$$

The right side of Equation B.5 is always positive or zero because, by convention, $\sqrt{x} \geqslant 0$ for any positive real x. When the left side of Equation B.5 is negative, the bottom sign ($<$) is valid in Equation B.5 and hence in Equation B.3 as well. Thus, in this case,

$$\varepsilon_L < 0 \tag{B.6}$$

and also

$$|\varepsilon_L| = -\varepsilon_L. \tag{B.7}$$

When the left side of Equation B.5 is positive or zero, none of the three possible signs ($>$, $=$, and $<$) is altered if both sides of Equation B.5 are squared, because in this case both sides of Equation B.5 are positive or zero. This results in Equation B.8:

$$\left(1 - \frac{1}{R_1(C_1 + C_2)}\frac{2R_1C_1R_2C_2}{R_1C_1 + R_1C_2 + R_2C_2}\right)^2 \gtreqless 1 - \frac{4R_1C_1R_2C_2}{(R_1C_1 + R_1C_2 + R_2C_2)^2}. \tag{B.8}$$

It can be shown that Equation B.8 can be rearranged as

$$-\frac{R_2}{R_1}\left(\frac{C_2}{C_1 + C_2}\right)^2 \gtreqless 0. \tag{B.9}$$

Clearly, the bottom sign ($<$) is valid in Equation B.9 and hence in Equation B.3 as well. Thus, Equations B.6 and B.7 are valid in this case too.

Now it is determined whether $|\varepsilon_L|$ is greater than, equal to, or less than R_2/R_1; that is, whether in the equation

$$|\varepsilon_L| \gtreqless \frac{R_2}{R_1} \tag{B.10}$$

the top sign ($>$), the center sign ($=$), or the bottom sign ($<$) is valid.

By use of Equations B.2 and B.7, Equation B.10 becomes

$$-R_1(C_1 + C_2)\frac{R_1C_1 + R_1C_2 + R_2C_2}{2R_1C_1R_2C_2} \times \left(1 - \sqrt{1 - \frac{4R_1C_1R_2C_2}{(R_1C_1 + R_1C_2 + R_2C_2)^2}}\right) - 1 \gtreqless \frac{R_2}{R_1}. \tag{B.11}$$

Equation B.11 can be rearranged as

$$\sqrt{1 - \frac{4R_1C_1R_2C_2}{(R_1C_1 + R_1C_2 + R_2C_2)^2}} \gtreqless 1 + \left(1 + \frac{R_2}{R_1}\right)\frac{1}{R_1(C_1 + C_2)}\frac{2R_1C_1R_2C_2}{R_1C_1 + R_1C_2 + R_2C_2}. \tag{B.12}$$

The left side of Equation B.12 is always positive or zero because, by convention, $\sqrt{x} \geqslant 0$ for any positive real x. The right side of Equation B.12 is also always positive. Thus, none of the three possible signs ($>$, $=$, and $<$) is altered if both sides of Equation B.12 are squared. This results in Equation B.13:

$$1 - \frac{4R_1C_1R_2C_2}{(R_1C_1 + R_1C_2 + R_2C_2)^2} \gtreqless \left[1 + \left(1 + \frac{R_2}{R_1}\right)\frac{1}{R_1(C_1 + C_2)}\frac{2R_1C_1R_2C_2}{R_1C_1 + R_1C_2 + R_2C_2}\right]^2. \tag{B.13}$$

Equation B.13 can be rearranged as

$$-\frac{4R_1C_1R_2C_2}{(R_1C_1 + R_1C_2 + R_2C_2)^2} \gtreqless \left[1 + \left(1 + \frac{R_2}{R_1}\right)\frac{1}{R_1(C_1 + C_2)}\frac{2R_1C_1R_2C_2}{R_1C_1 + R_1C_2 + R_2C_2}\right]^2 - 1. \tag{B.14}$$

The left side of Equation B.14 is always negative and the right side is always positive; hence, the left side is always less than the right side. Thus, the bottom sign ($<$) is valid in Equation B.14 and hence in Equation B.10 as well. Therefore, Equation B.10 becomes

$$|\varepsilon_L| < \frac{R_2}{R_1}. \tag{B.15}$$

Thus, the magnitude of the fractional error of τ_L of Equation 6.31c, $|\varepsilon_L|$, is indeed always less than R_2/R_1.

To find the fractional error ε_U of time constant τ_U, the approximate τ_U from Equation 6.31d has to be substituted for $\tau_{\text{approximate}}$ in Equations B.1a and B.1b, and the exact τ_U from Equation 6.30d has to be substituted for τ_{exact} in Equations B.1a and B.1b. Thus, Equation B.1b becomes

$$\varepsilon_U = R_2 \frac{C_1C_2}{C_1+C_2} \frac{R_1C_1+R_1C_2+R_2C_2}{2R_1C_1R_2C_2} \times \left(1+\sqrt{1-\frac{4R_1C_1R_2C_2}{(R_1C_1+R_1C_2+R_2C_2)^2}}\right) - 1. \tag{B.16}$$

Now it is determined whether ε_U is positive, zero, or negative; that is, whether in the equation

$$\varepsilon_U \gtreqless 0 \tag{B.17}$$

the top sign (>), the center sign (=), or the bottom sign (<) is valid. By substitution of Equation B.16, Equation B.17 becomes

$$R_2 \frac{C_1C_2}{C_1+C_2} \frac{R_1C_1+R_1C_2+R_2C_2}{2R_1C_1R_2C_2} \times \left(1+\sqrt{1-\frac{4R_1C_1R_2C_2}{(R_1C_1+R_1C_2+R_2C_2)^2}}\right) - 1 \gtreqless 0. \tag{B.18}$$

Equation B.18 can be rearranged as

$$\sqrt{1-\frac{4R_1C_1R_2C_2}{(R_1C_1+R_1C_2+R_2C_2)^2}} \gtreqless \frac{R_1C_1+R_1C_2-R_2C_2}{R_1C_1+R_1C_2+R_2C_2}. \tag{B.19}$$

The left side of Equation B.19 is always positive because, by convention, $\sqrt{x} \geqslant 0$ for any positive real x. When the right side of Equation B.19 is negative, then the top sign (>) is valid in Equation B.19 and hence in Equation B.17 as well. Thus, in this case

$$\varepsilon_U > 0 \tag{B.20}$$

and also

$$|\varepsilon_U| = \varepsilon_U. \tag{B.21}$$

When the right side of Equation B.19 is positive or zero, then none of the three possible signs (>, =, and <) is altered if both sides of Equation B.19 are squared, because in this case both sides of Equation B.19 are positive or zero. This results in Equation B.22:

$$1-\frac{4R_1C_1R_2C_2}{(R_1C_1+R_1C_2+R_2C_2)^2} \gtreqless \frac{(R_1C_1+R_1C_2-R_2C_2)^2}{(R_1C_1+R_1C_2+R_2C_2)^2}. \tag{B.22}$$

Equation B.22 can be rearranged as

$$4R_1C_1R_2C_2 \gtreqless 0. \tag{B.23}$$

Clearly, the top sign (>) is valid in Equation B.23 and hence in Equation B.17 as well. Thus, Equations B.20 and B.21 are valid in this case too.

Now it is determined whether $|\varepsilon_U|$ is greater than, equal to, or less than R_2/R_1; that is, whether in the equation

$$|\varepsilon_U| \gtreqless \frac{R_2}{R_1} \tag{B.24}$$

the top sign (>), the center sign (=), or the bottom sign (<) is valid. By use of Equations B.16 and B.21, Equation B.24 becomes

$$R_2 \frac{C_1C_2}{C_1+C_2} \frac{R_1C_1+R_1C_2+R_2C_2}{2R_1C_1R_2C_2} \times \left(1+\sqrt{1-\frac{4R_1C_1R_2C_2}{(R_1C_1+R_1C_2+R_2C_2)^2}}\right) - 1 \gtreqless \frac{R_2}{R_1}. \tag{B.25}$$

Equation B.25 can be rearranged as

$$\sqrt{1-\frac{4R_1C_1R_2C_2}{(R_1C_1+R_1C_2+R_2C_2)^2}} \gtreqless \frac{R_1C_1+R_1C_2+2R_2C_1+R_2C_2}{R_1C_1+R_1C_2+R_2C_2}. \tag{B.26}$$

The left side of Equation B.26 is always positive or zero because, by convention, $\sqrt{x} \geqslant 0$ for any positive real x. The right side of Equation B.26 is also always positive. Thus, none of the three possible signs (>, =, and <) is altered if both sides of Equation B.26 are squared. This results in Equation B.27:

$$1-\frac{4R_1C_1R_2C_2}{(R_1C_1+R_1C_2+R_2C_2)^2} \gtreqless \frac{R_1C_1+R_1C_2+2R_2C_1+R_2C_2}{R_1C_1+R_1C_2+R_2C_2}. \tag{B.27}$$

Equation B.27 can be rearranged as

$$-2 \gtreqless 1+\frac{C_1}{C_2}+\frac{R_2}{R_1}. \tag{B.28}$$

Clearly, the bottom sign (<) is valid. Therefore, Equation B.24 becomes

$$|\varepsilon_U| < \frac{R_2}{R_1}. \tag{B.29}$$

Thus, the magnitude of the fractional error of τ_U of Equation 6.31d, $|\varepsilon_U|$, is indeed always less than R_2/R_1. This completes the proof of the statement that the magnitudes of the fractional errors of τ_L and τ_U of Equations 6.31c and 6.31d are always less than R_2/R_1.

B.2 The Relative Magnitudes of τ_L, τ_2, and τ_U

First, the relative magnitudes of τ_2 and τ_L, from Equations 6.30b and 6.30c are compared; that is, it is determined whether in the equation

$$\frac{1}{\tau_L} \gtreqless \frac{1}{\tau_2} \tag{B.30}$$

the top sign (>), the center sign (=), or the bottom sign (<) is valid. By substitution of Equations 6.30b and 6.30c, Equation B.30 becomes

$$\frac{R_1C_1 + R_1C_2 + R_2C_2}{2R_1C_1R_2C_2}\left(1 - \sqrt{1 - \frac{4R_1C_1R_2C_2}{(R_1C_1 + R_1C_2 + R_2C_2)^2}}\right) \gtreqless \frac{1}{R_2C_2}. \tag{B.31}$$

Equation B.31 can be rearranged as

$$-\sqrt{1 - \frac{4R_1C_1R_2C_2}{(R_1C_1 + R_1C_2 + R_2C_2)^2}} \gtreqless \frac{R_1C_1 - R_1C_2 - R_2C_2}{R_1C_1 + R_1C_2 + R_2C_2}. \tag{B.32}$$

The validity of an inequality is not altered if both sides are multiplied by -1 *and* are interchanged. Hence, Equation B.32 can be written

$$\frac{-R_1C_1 + R_1C_2 + R_2C_2}{R_1C_1 + R_1C_2 + R_2C_2} \gtreqless \sqrt{1 - \frac{4R_1C_1R_2C_2}{(R_1C_1 + R_1C_2 + R_2C_2)^2}}. \tag{B.33}$$

The right side of Equation B.33 is always positive or zero because, by convention, $\sqrt{x} \geqslant 0$ for any positive real x. When the left side of Equation B.33 is negative, the bottom sign (<) is valid in Equation B.33 and hence in Equation B.30 as well. Thus, in this case,

$$\frac{1}{\tau_L} < \frac{1}{\tau_2}. \tag{B.34}$$

When the left side of Equation B.33 is positive or zero, none of the three possible signs (>, =, and <) is altered if both sides of Equation B.33 are squared, because in this case both sides of Equation B.33 are positive or zero. This results in Equation B.35:

$$\frac{(-R_1C_1 + R_1C_2 + R_2C_2)^2}{(R_1C_1 + R_1C_2 + R_2C_2)^2} \gtreqless 1 - \frac{4R_1C_1R_2C_2}{(R_1C_1 + R_1C_2 + R_2C_2)^2}. \tag{B.35}$$

It can be shown that Equation B.35 can be rearranged as

$$0 \gtreqless 4R_1^2C_1C_2. \tag{B.36}$$

Clearly, the bottom sign (<) is valid in Equation B.36 and hence in Equation B.30 as well. Thus, Equation B.34 is valid in this case too.

Next, the relative magnitudes of τ_2 and τ_U from Equations 6.30b and 6.30d are compared; that is, it is determined whether in the equation

$$\frac{1}{\tau_U} \gtreqless \frac{1}{\tau_2} \tag{B.37}$$

The top sign (>), the center sign (=), or the bottom sign (<) is valid. By substitution of Equations 6.30b and 6.30d, Equation B.37 becomes

$$\frac{R_1C_1 + R_1C_2 + R_2C_2}{2R_1C_1R_2C_2}\left(1 + \sqrt{1 - \frac{4R_1C_1R_2C_2}{(R_1C_1 + R_1C_2 + R_2C_2)^2}}\right) \gtreqless \frac{1}{R_2C_2}. \tag{B.38}$$

Equation B.38 can be rearranged as

$$\sqrt{1 - \frac{4R_1C_1R_2C_2}{(R_1C_1 + R_1C_2 + R_2C_2)^2}} \gtreqless \frac{R_1C_1 - R_1C_2 - R_2C_2}{R_1C_1 + R_1C_2 + R_2C_2}. \tag{B.39}$$

The left side of Equation B.39 is always positive or zero because, by convention, $\sqrt{x} \geqslant 0$ for any positive real x. When the right side of Equation B.39 is negative, the top sign (>) is valid in Equation B.39 and hence in Equation B.37 as well. Thus, in this case,

$$\frac{1}{\tau_U} > \frac{1}{\tau_2}. \tag{B.40}$$

When the right side of Equation B.39 is positive or zero, none of the three possible signs (>, =, and <) is altered if both sides of Equation B.39 are squared, because in this case both sides of Equation B.39 are positive or zero. This results in Equation B.41:

$$1 - \frac{4R_1C_1R_2C_2}{(R_1C_1 + R_1C_2 + R_2C_2)^2} \gtreqless \frac{(R_1C_1 - R_1C_2 - R_2C_2)^2}{(R_1C_1 + R_1C_2 + R_2C_2)^2}. \tag{B.41}$$

It can be shown that Equation B.41 can be rearranged as

$$4R_1^2C_1C_2 \gtreqless 0. \tag{B.42}$$

Clearly, the top sign (>) is valid in Equation B.42 and hence in Equation B.37 as well. Thus, Equation B.40 is valid in this case too.

The combination of Equations B.34 and B.40 results in Equation 6.32a. This completes the proof of Equation 6.32a.

APPENDIX C

Properties of Operational Amplifiers Used in the Examples and Problems

The properties listed in this appendix are typical except where stated otherwise.

Type:	108A	725C	741	2539	9914A	13741
Description:	Precision Monolithic	High-Gain Monolithic	Internally Compensated Monolithic	Wideband Monolithic	Wideband Hybrid	Internally Compensated FET-Input
Dc Amplification	300,000	3,000,000	200,000	30,000	5000	100,000
Maximum input bias current	2 nA	125 nA	500 nA	20 μA	20 μA	0.2 nA
Maximum input offset current	0.2 nA	35 nA	200 nA	6 μA	20 μA	0.05 nA
Maximum input offset voltage	0.5 mV	2.5 mV	5 mV	15 mV	30 mV	15 mV
Temperature coefficient of input offset voltage	5 μV/°C	10 μV/°C	30 μV/°C	50 μV/°C	100 μV/°C	15 μV/°C
Minimum dc common-mode rejection ratio	96 dB	94 dB	70 dB	60 dB	90 dB	70 dB
Differential input resistance	70 MΩ	1.5 MΩ	2 MΩ	10 kΩ	10 kΩ	500 GΩ
Minimum supply voltage rejection ratio	96 dB	90 dB	77 dB	60 dB	70 dB	77 dB
Corner frequencies	20 Hz[a] 2 MHz[a]	2 Hz[a] 1.5 MHz[a]	10 Hz 10 MHz	20 kHz 300 MHz 300 MHz	500 kHz 50 MHz	10 Hz 1 MHz
Slew rate	1.5 V/μs	10 V/μs	0.5 V/μs	600 V/μs	1000 V/μs	0.5 V/μs

[a]When compensated for $M_N = 10$.

Answers to Selected Problems

CHAPTER 1

1.1 -1 V

CHAPTER 2

2.7 0, 10 V

2.10 1 millisecond

CHAPTER 3

3.10 0, 10 mV

3.14 -0.999 mV

3.16 $-10{,}000$

CHAPTER 4

4.1 9616.3 to 10,001

4.10 0

4.12 10%

4.13 $\approx \pm 0.4\%$

CHAPTER 5

5.11 3.18 MHz

CHAPTER 7

7.28 52°

7.29 52°

CHAPTER 8

8.34 38.7°

8.45 1, 1 MHz

8.75 $1 - (1 + 2.22t)e^{-t/0.45}$

8.76 $1 - (1 + 2.22t + 2.47t^2)e^{-t/0.45}$

CHAPTER 9

9.1 5000, 0.5, 80 dB

9.2 200 Hz

CHAPTER 10

10.7 150 mV

10.8 23 mV

Index

108A, 208, 218, 268
725C, 35, 268
741, 186, 215, 268
2539, 74–76, 91, 109–115, 118, 166, 169–170, 172–175, 181–183, 185, 190–191, 213, 232–233, 238, 268
9914A, 103–105, 117–118, 137–141, 143–145, 148–152, 155–160, 184, 188–189, 213, 218, 237, 244, 268
13741, 162–166, 187–190, 217–218, 222–223, 227–231, 233–236, 243–244, 268

Adder, 223–225, 240
Amplification, 1–3, 5, 8–10, 28–30, 33–37, 39, 268
  accuracy, 3, 24, 27–37
  closed-loop, *see* Resulting amplification
  infinite, 12–25, 119–122

Balance adjustment, 246–247, 251–253
Bandwidth, 39, 123–127, 187
Bias current, *see* Input bias current
Bode plot, 44, 55–56, 87, 116

Common-mode amplification, 2–3, 197–202
Common-mode rejection, 197–201, 208, 268
Common-mode rejection ratio, 198–202, 208, 268 dc, 198, 208
  frequency characteristics, 198–199, 208
Comparator, 10
Compound differential amplifier, 23, 36, 208
Compound lag network, 70–76, 81, 118, 259–265
Computer-aided design, 184
Corner frequency, 40, 44, 59, 87, 94, 115–118, 119, 268
  four, 87, 92–94
  no, 119–122
  one, 87, 115, 123–135, 185–186
  three, 87–91, 93–95, 98, 108–113, 116, 118, 166–182, 190–194
  two, 87, 101–107, 117–118, 135–166, 186–190
Crossover frequency, 99
Cubic equation, *see* Third-order equation
Current mirror, 247–253
Current source input, 219–223, 240
Cyclic frequency, 40

Decibel, 44
Decompensated operational amplifier, 94
Delay, 39, 116
Delta function, 55, 230–232, 235
Differential amplification, 5
Differential amplifier, 6–10, 23. *See also* Feedback amplifier, differential
Differential gain, *see* Differential amplification
Differential-in differential-out amplifier, 19–21
Differential voltage amplification, 5
Differential voltage gain, *see* Differential voltage amplification
Differentiator, 237–238, 243–244
Drift, temperature, *see* Temperature coefficient

Encircling, 83–86
Excess phase, 101
Expansion, binomial, 41–42
Expansion, logarithmic, 41–42, 56
Exponential amplifier, 239

Feedback, 3, 11–25
  frequency-independent, 119, 123–125, 136–141, 166–170, 187, 191
  negative, 11
  positive, 24, 36
Feedback amplification, *see* Resulting amplification

Feedback amplifier, 11–25, 83–118, 119–195, 210–212
resulting amplification, 12–25, 27–37
resulting amplification, fractional change, 27–37, *see also* Feedback amplifier, resulting amplification, fractional error
resulting amplification, fractional error, 24, 33–37, *see also* Feedback amplifier, resulting amplification, fractional change
Feedback amplifier, differential, 15–18, 20–22, 199–202, 210–212
equalized amplification, 17–18, 20–22, 199–202, 210–212
feedback factor, 16–18
feedback return, 16
resulting amplification, 16–18, 20–22, 24, 27–37
Feedback amplifier, inverting, 13–15, 22, 24, 29–30, 32–37, 90, 114–116, 182–183
feedback factor, 14–15, 22
feedback return, 14–15
resulting amplification, 13–15, 22, 24
resulting amplification, fractional change, 29–30, 32–37, *see also* Feedback amplifier, inverting, fractional error
resulting amplification, fractional error, 24, 33–37, *see also* Feedback amplifier, inverting, fractional change
Feedback amplifier, noninverting, 11–13, 19, 21–22, 24, 27–29, 31–37
feedback factor, 12–13
feedback return, 12–13, 19
resulting amplification, 12–13, 19, 21–22, 24
resulting amplification, fractional change, 27–29, 31–37, *see also* Feedback amplifier, noninverting, fractional error
resulting amplification, fractional error, 24, 33–37, *see also* Feedback amplifier, noninverting, fractional change
Feedback factor, 12–18, 25, 31–33
Feedback gain, *see* Resulting amplification
Feedback resistor, 30–37
Feedback return, 12–16, 31–33
Fifth-order equation, 195
Fourth-order equation, 175–180, 182, 191–194
Frequency, 1–3, 5
Frequency response, 39–57, 59–82, 119–195

Gain, 1, 5
closed-loop, *see* Resulting amplification
resulting, *see* Resulting amplification

Ideal operational amplifier, 5–10
Impulse function, 55, 230–232, 235
Input bias current, 2, 209–211, 217–218, 245, 253, 268
Input capacitance, 202–205, 208
Input current, 2, 209–211, 217–218, 245–246, 253, 268
Input impedance, 202–205, 208, 268
Input offset current, 2–3, 209–211, 217–218, 246, 268
Input offset voltage, 2–3, 211–212, 218, 253, 268
Input resistance, 202–205, 208, 268
Input resistor, 33–37
Input stage, 245–247, 249–251
Instrumentation amplifier, 19–21, 36–37
Integrator, 225–236, 240–243
Internally compensated operational amplifier, 94–95, 116
Inverting amplifier, 6. *See also* Feedback amplifier, inverting

Lag compensation, 94–95
Lag-lead compensation, 111–113, 121–122, 125–135, 160–166, 181–183, 194, 238, 244
Lag network, 39–57, 87–93. *See also* Corner frequency
Laplace transform, 42–43, 257
Lead network, 63–66, 80–81
Lead-lag compensation, 96–100, 103–107, 109–110, 117–118, 120–121, 141–160, 171–180, 182–183, 187–195, 218
Limitation, 212–213
Logarithmic amplifier, 239, 244
Loop gain, *see* Feedback factor

Magnitude, 1, 40–42
Modified lag network, 59–62, 80–81

Noise, 215–218
Noninverting amplifier, 5–6. *See also* Feedback amplifier, noninverting
Nyquist criterion, 83–87, 99, 101
Nyquist diagram, 83–87, 115

Open-loop amplification, 5
Open-loop gain, *see* Open-loop amplification
Output current, 212–213
Output impedance, 205–206, 208
Output stage, 252
Output voltage, 212–213

Phase, 40–42, 55, 117
Phase margin, 99, 101–113, 117–118, 128, 233, 243
Piecewise linear approximation, 44, 56
Pole, 40, 94
Pole frequency, 40, 59
Pole-zero cancellation, 97–98, 142–145, 156–158, 171–175, 182–183, 187–191
Potentiometric amplifier, 25
Power supply rejection ratio, 207–208, 268
Property, 267–268

Quadratic equation, *see* Second-order equation
Quartic equation, *see* Fourth-order equation
Quintic equation, *see* Fifth-order equation

RLC circuit, 76–80, 82
Rating, 212–213, 236
Real operational amplifier, 197–208, 209–218
Referred to the input, 211
Referred to the output, 211
Resulting amplification, 11–25
Rise time, 39

Second-order equation, 255
Slew rate, 214–215, 218, 268
Stability, 83–118
absolute, 99
conditional, 98–100, 117, 195
marginal, 89
Step function, 43
Structure, internal, 245–253
Supply-voltage rejection, 207–208
Supply-voltage rejection ratio, 207–208, 268
frequency characteristics, 207

Taylor series, 28–31, 34–37, 56
Temperature coefficient, 210–212, 217–218, 247, 268
Temperature drift, *see* Temperature coefficient
Third-order equation, 146–156, 158–160, 163–169, 173–174, 187–191, 194, 255–256
Transfer function, 40
Transient response, 39–57, 59–82, 119–195

Voltage amplification, 5
Voltage divider network, 66–70, 81
compensated, 67–70
Voltage follower, 19, 22, 36, 95, 238, 244
Voltage gain, *see* Voltage amplification

Zero, 59, 94
Zero frequency, 59
Zeroing, *see* Balance adjustment