ICOM

SERVICE MANUAL

DUAL BAND FM TRANSCEIVER

IC-T7A
IC-T7E

Icom Inc.

INTRODUCTION

This service manual describes the latest service information for the **IC-T7A/E** DUAL BAND FM TRANSCEIVER at the time of publication.
5 versions of the **IC-T7A/E** have been designed. This serves manual covers each versions.

MODEL	VERSION NUMBER	VERSION	SYMBOL
IC-T7A	#05	U.S.A.	USA
	#07	Australia	AUS
	#09	SE Asia	SEA
IC-T7E	#02	Europe	EUR
	#04	Italy	ITA

To upgrade quality, any electrical or mechanical parts and internal circuits are subject to change without notice or obligation.

DANGER

NEVER connect the transceiver to an AC outlet or to a DC power supply that uses more than 16 V. This will ruin the transceiver.
DO NOT expose the transceiver to rain, snow or any liquids.
DO NOT reverse the polarities of the power supply when connecting the transceiver.
DO NOT apply an RF signal of more than 20 dBm (100 mW) to the antenna connector. This could damage the transceiver's front end.

ORDERING PARTS

Be sure to include the following four points when ordering replacement parts:
1. 10-digit order numbers
2. Component part number and name
3. Equipment model name and unit name
4. Quantity required

<SAMPLE ORDER>

1110002700	S.IC	NJM2904M-T1	IC-T7A	1F UNIT	5 pieces
8810008750	Screw	PH BT M2 x 15 ZK	IC-T7A	Rear pane	10 pieces

Addresses are provided on the inside back cover for your convenience.

REPAIR NOTES

1. Make sure a problem is internal before disassembling the transceiver.
2. **DO NOT** open the transceiver until the transceiver is disconnected from its power source.
3. **DO NOT** force any of the variable components. Turn them slowly and smoothly.
4. **DO NOT** short any circuits or electronic parts. An insulated tuning tool **MUST** be used for all adjustments.
5. **DO NOT** keep power ON for a long time when the transceiver is defective.
6. **DO NOT** transmit power into a signal generator or a sweep generator.
7. **ALWAYS** connect a 40 dB to 50 dB attenuator between the transceiver and a deviation meter or spectrum analyzer when using such test equipment.
8. **READ** the instructions of test equipment thoroughly before connecting equipment to the transceiver.

TABLE OF CONTENTS

SECTION 1 SPECIFICATIONS

				144 MHz band	430 (440) MHz band
GENERAL	Frequency coverage		U.S.A	Tx: 144 MHz–148 MHz Rx: 118 MHz–174 MHz*[1]	Tx: 440 MHz–450 MHz Rx: 400 MHz–470 MHz*[2]
			Europe	144 MHz–146 MHz	430 MHz–440 MHz
			SE Asia	Tx: 144 MHz–148 MHz Rx: 118 MHz–174 MHz*[1]	430 MHz–440 MHz
			Italy	Tx: 144 MHz–146 MHz Rx: 136 MHz–174 MHz*[1]	Tx: 430 MHz–440 MHz Rx: 400 MHz–470 MHz*[3]
			Australia	144 MHz–148 MHz	430 MHz–440 MHz
			Guaranteed frequency range: *[1]144 MHz–148 MHz, *[2]440 MHz–450 MHz, *[3]430 MHz–440 MHz		
	Mode			FM (F3E)	
	Frequency stability (±0 °C to +50 °C, +32 °F to +122 °F)			± 5 ppm	
	Tuning steps			5, 10, 12.5, 15, 20, 25, 30 or 50 kHz	
	Antenna connector			BNC (50 Ω)	
	External DC power			4.5 to 16 V DC	
	Current drain (at 13.5 V)	Tx	High power	1.2 A (typ.)	1.3 A (typ.)
			Low power	0.6 A (typ.)	0.6 A (typ.)
		Rx	Rated audio	140 mA (typ.)	150 mA (typ.)
			Power saved	16 mA (typ.)	19 mA (typ.)
	Usable temperature range			−10 °C to +60 °C (+14 °F to +140 °F)	
	Dimensions (Projections not included)			57 (W) × 110 (H) × 27 (D) mm; 2 1/4 (W) × 4 5/16 (H) × 1 1/16 (D) in (with BP-170/171) 57 (W) × 122 (H) × 29 (D) mm; 2 1/4 (W) × 4 13/16 (H) × 1 1/8 (D) in (with BP-180)	
	Weight			285 g ; 10.1 oz (with BP-170 and dry cell batteries) 305 g ; 10.8 oz (with BP-171) 320 g ; 11.3 oz (with BP-180)	
TRANSMITTER	RF output power (at 13.5 V DC)			High: 4.0 W Low: 0.5 W	High: 3.0 W Low: 0.5 W
	Modulation system			Variable reactance frequency modulation	
	Max. frequency deviation			±5.0 kHz	
	Spurious emissions			Less than −60 dB	
	External mic. connector			3-conductor 2.5 mm (1/10") (2 kΩ)	
RECEIVER	Receive system			Double-conversion superheterodyne	
	Intermediate frequencies			1st: 45.150 MHz, 2nd: 450 kHz	
	Sensitivity			Less than 0.16 μV (typical) for 12 dB SINAD	
	Squelch sensitivity			Less than 0.16 μV	
	Selectivity			More than 30 kHz/ −60 dB, Less than 15 kHz/ −6 dB	
	Spurious and image rejection ratio			More than 60 dB (More than 50 dB at 1/2 IF)	More than 50 dB
	Audio output power (at 13.5 V)			More than 250 mW at 10 % distortion with an 8 Ω load	
	External speaker connector			3-conductor 3.5 mm (1/8") (8 Ω)	

All stated specifications are subject to change without notice or obligation.

SECTION 2 INSIDE VIEWS

• LOGIC AND 2F UNITS

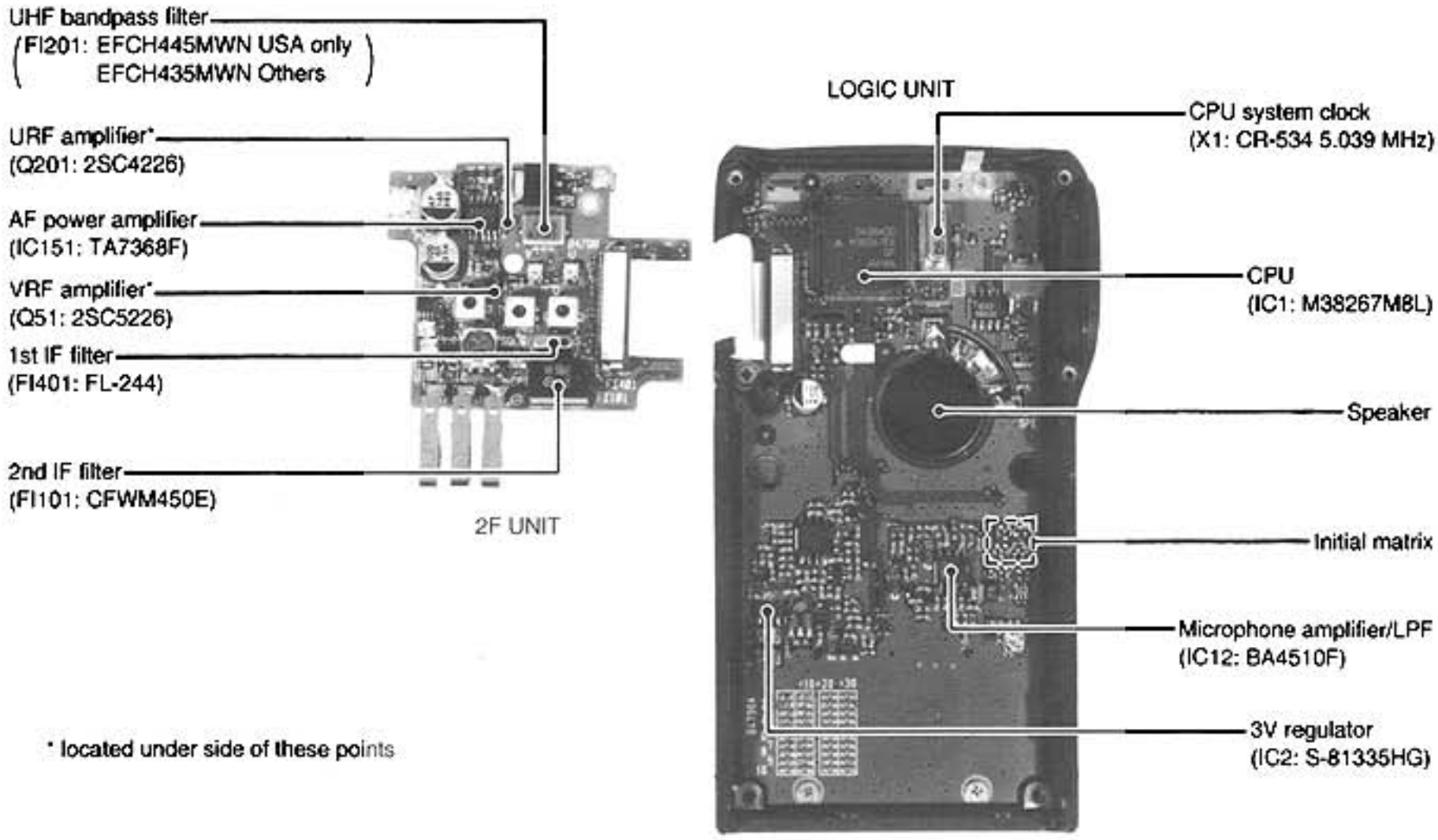

• 1F UNIT

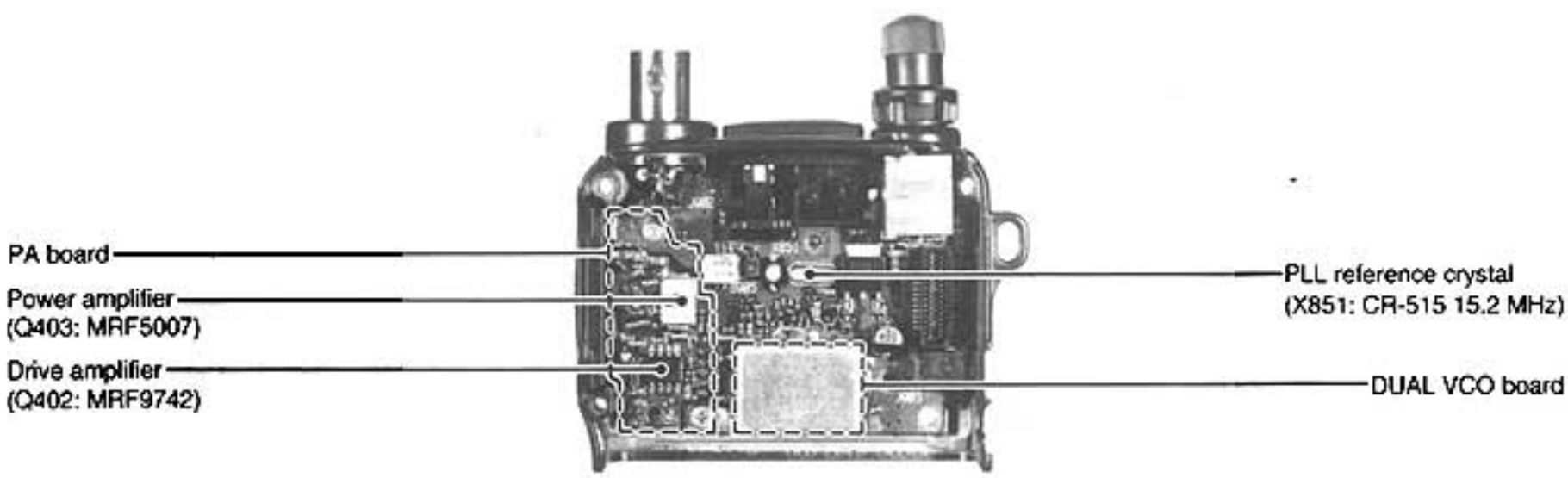

SECTION 3 DISASSEMBLY INSTALLATIONS

■ Disassembling panels

- Unscrew 4 screws ⓐ from the rear panel and 2 screws ⓑ from the rear plate to separate front and rear panels.
- Unscrew 4 screws ⓒ from the rear plate to remove it.

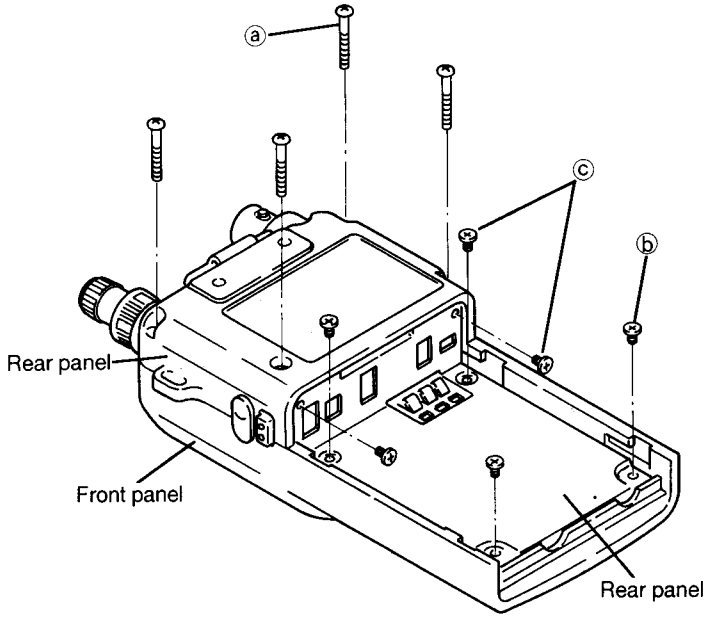

■ Removing 2F unit

- Unscrew 1 screw ⓔ from the 2F unit.
- Unsolder the point ⓕ, then remove the 2F unit with the contact base.
  (Disconnect J1 on reverse side of the 2F unit to remove.)

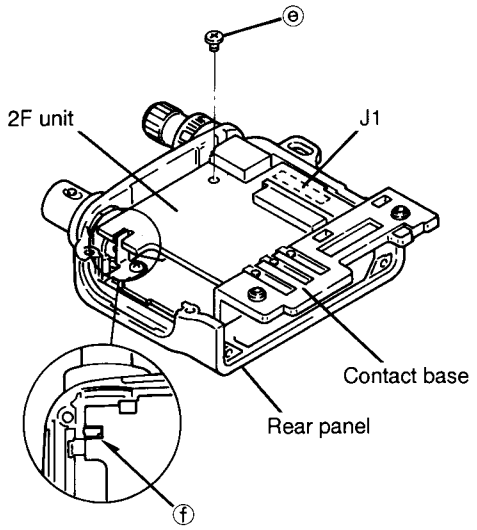

■ Removing LOGIC unit

- Unscrew 4 screws ⓓ from the LOGIC unit.
- Unsolder jumper wires form the speaker as shown below.

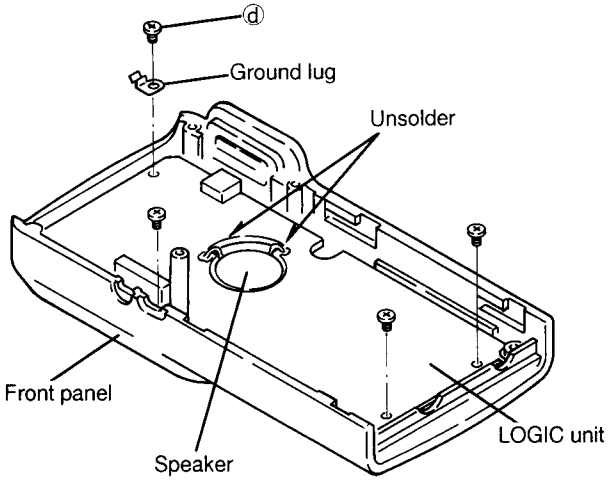

■ Removing 1F unit

- Pull the 2 knobs off, and then unscrew the nut.
- Unscrew 3 screws ⓖ, and 2 screws ⓗ from the 1F unit.
- Unsolder the points ⓘ, then remove the 1F unit.

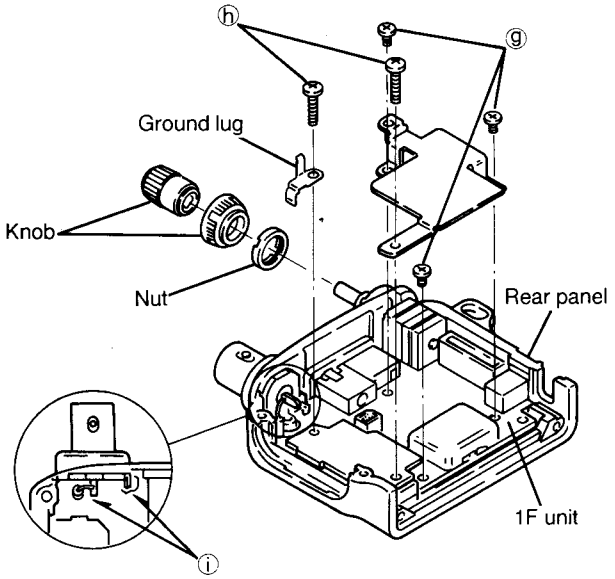

SECTION 4 CIRCUIT DESCRIPTION

4-1 RECEIVER CIRCUITS

4-1-1 DUPLEXER CIRCUIT (1F UNIT)

The transceiver has a duplexer (low-pass and high-pass filters) on the first stage from the antenna connector to separate the signals into VHF and UHF signals. The low-pass filter (L10–L12, C16–C22) for VHF signals and high-pass filter (L1–L3, C1–C5) for UHF signals. The separated signals are applied to each RF circuit.

4-1-2 VHF ANTENNA SWITCHING CIRCUIT (1F UNIT)

The antenna switching circuit functions as a low-pass filter while receiving. However, its impedance becomes very high while transmitting by applying a current to D51 and D52. Thus, transmit signals are blocked from entering the receiver circuits. The antenna switching circuit employs a 1/4 λ type diode switching system. The passed signals are then applied to the RF amplifier circuit on the 2F unit.

4-1-3 VHF RF CIRCUIT (2F UNIT)

The RF circuit amplifies signals within the range of frequency coverage and filters out-of-band signals.

The signals from the antenna switching circuit are applied to the bandpass filter (D52, L53), and are then applied to the RF amplifiers (Q51, Q52). The amplifier consists of a cascade circuit. The amplified signals are passed through the next stage bandpass filter (D53, D54, L54, L55) to suppress unwanted signals. The filtered signals are then applied to the mixer circuit (Q401).

D53 and D54 track the bandpass filters and are controlled by the PLL lock voltage. These diodes tune the center frequency to obtain good image response rejection.

4-1-4 UHF RF CIRCUIT (2F UNIT)

The signals from the antenna switching circuit (1F unit D551, D552) are amplified at the the RF amplifier (Q201) and are then passed though the bandpass filter (FI201). The filtered signals are applied to another RF amplifier (Q202) and are then applied to the 1st mixer circuit (Q401).

Common circuits with VHF band are used later stage from the 1st mixer.

4-1-5 1ST MIXER AND 1ST IF CIRCUITS (2F UNIT)

The mixer circuit converts the received signal to a fixed frequency of the 1st IF signal with a 1st LO (VCO output) frequency. By changing th PLL frequency, only the desired frequency will be passed though a crystal filter at the next stage of the mixer.

The receive signals from the VHF or UHF RF circuit are mixed with the 1st LO signal (VCO output signal) at the 1st mixer (Q401) to produce a 45.15 MHz 1st IF signal.

The 1st IF signal is applied to a crystal filter (FI401) to suppress out-of-band signals. The filtered 1st IF signal is amplified at the IF amplifier (Q101) and is then applied to the 2nd mixer circuit (IC101).

4-1-6 2ND IF AND DEMODULATOR CIRCUITS (2F UNIT)

The 2nd mixer circuit converts the 1st IF signal to a 2nd IF signal. A double superheterodyne system (which converts receive signals twice) improves the image rejection ratio and obtains stable receiver gain.

The FM IF IC (IC101) contains the 2nd mixer, 2nd local oscillator, limiter amplifier, S-meter detector and quadrature detector circuits.

The 1st IF signal (45.15 MHz) from the IF amplifier (Q101) is applied to the 2nd mixer section of IC101 (pin 16), and is mixed with the 2nd LO signal (45.6 MHz) for conversion to a 450 kHz 2nd IF signal at the 2nd mixer section.

The 2nd IF signal (450 kHz) from the 2nd mixer section (IC101 pin 3) passes though the ceramic filter (FI101) where unwanted signals are suppressed. It is then amplified at the limiter amplifier section (IC101 pin 5) and applied to the quadrature detector section to demodulate the 2nd IF signal into AF signals.

AF signals output from IC101 (pin 9) are applied to the AF drive amplifier (Q12) on the LOGIC unit. The S-meter output "SD" signal from IC101 (pin 12) is applied to the CPU (LOGIC unit pin 3).

2nd IF AND DEMODULATOR CIRCUIT

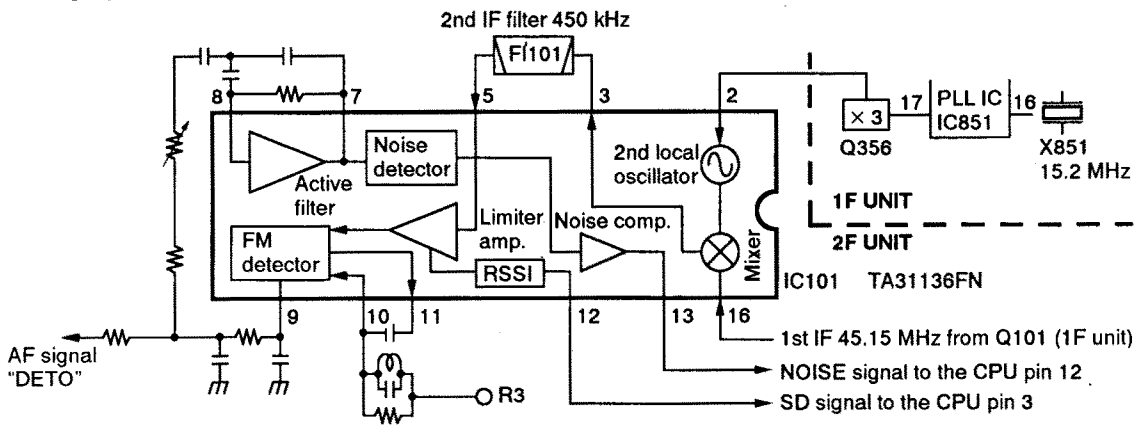

4-1-7 AF AMPLIFIER CIRCUIT (LOGIC UNIT)

The AF amplifier circuit, including an AF mute switch, amplifies the demodulated signals to drive a speaker.

The demodulated AF signals ("DETO" signals) from the FM IF IC (IC 101) on the 2F unit are applied to the drive amplifier (Q12) though the bandpass filter (C44, C45). The bandpass filter suppresses subaudible tones and higher noise signal components.

The amplified signals from Q12 pass through the AF mute switch (Q10) and are then applied to the AF volume control on the 1F unit via the "AF" signal line.

4-1-8 AF POWER AMPLIFIER CIRCUIT (2F UNIT)

The AF signals from the AF volume control ("AFV" signals) are amplified at the AF power amplifier IC (IC151). The amplified AF signals are applied to the loud speaker via the external speaker jack (1F unit J902).

4-1-9 NOISE SQUELCH UNIT (2F UNIT)

A noise squelch circuit cuts out AF signals when no RF signal is received. By detecting noise components in the AF signals, the squelch circuit switches the AF mute switch.

Some of the noise components in the AF signals from the FM IF IC (IC101 pin 9) are applied to the active filter section (IC101 pins 7, 8). The variable register (R504) adjusts the active filter input level.

The active filter section amplifies noise components with frequencies of 20 kHz and above. The filtered signals are rectified at the noise detector section and converted into "NOISE" (pulse type) signals at the noise comparator section. The "NOISE" signal is applied to the CPU (LOGIC unit IC1 pin 12).

The CPU detects the signal level from the number of the pulses, and outputs an "MM/RM" signal from pin 44. This signal controls the AF mute switch (Q10) to cut the AF signal line.

4-2 TRANSMITTER CIRCUITS

4-2-1 MICROPHONE AMPLIFIER CIRCUIT (LOGIC AND 2F UNIT)

The microphone amplifier circuit amplifies audio signals with +6 dB/octave pre-emphasis from the microphone to a level needed for the modulation circuit.

The AF signals from the built-in condenser microphone (LOGIC unit MC1), or from the [MIC] jack via the "EXT MIC" line are applied to the limiter amplifier (LOGIC unit IC12 pin 3) which has +6 dB/octave pre-emphasis characteristics. The amplified AF signals pass though the splatter filter (IC12 pins 5–7). The filtered signals are applied to frequency deviation pots (2F unit R308 for VHF, R314 for UHF) and are then applied to the modulation circuit on the DUAL VCO board.

Q32 on the LOGIC unit is the PTT control circuit and outputs a "High" signal to the CPU when transmitting.

4-2-2 MODULATION CIRCUIT (DUAL VCO BOARD)

The modulation circuit modulates the VCO oscillating signal (RF signal) using the microphone audio signals.

The "VMOD" signals change the reactance of a diode (D304) to modulate the oscillated signal at the VHF-VCO circuit (Q304, Q305, D303).

The "UMOD" signals are applied to the UHF-VCO circuit via the "USHIFT" line. The applied signals change the reactance of a diode (D302) to modulate the oscillated signal at the UHF-VCO circuit (Q301, Q302, D301).

The VCO output is buffer-amplified at Q306 and then applied to the band switch (D351, D352) via the LO amplifiers (Q852, Q351).

4-2-3 POWER AMPLIFIER CIRCUIT (1F UNIT)

Q402 is a drive and Q403 is a power amplifier. They are designed to use both VHF and UHF commonly. They provide more than 4 W for VHF and 3 W for UHF with a 13.5 V DC power source via one power amplifier system.

APC CIRCUIT

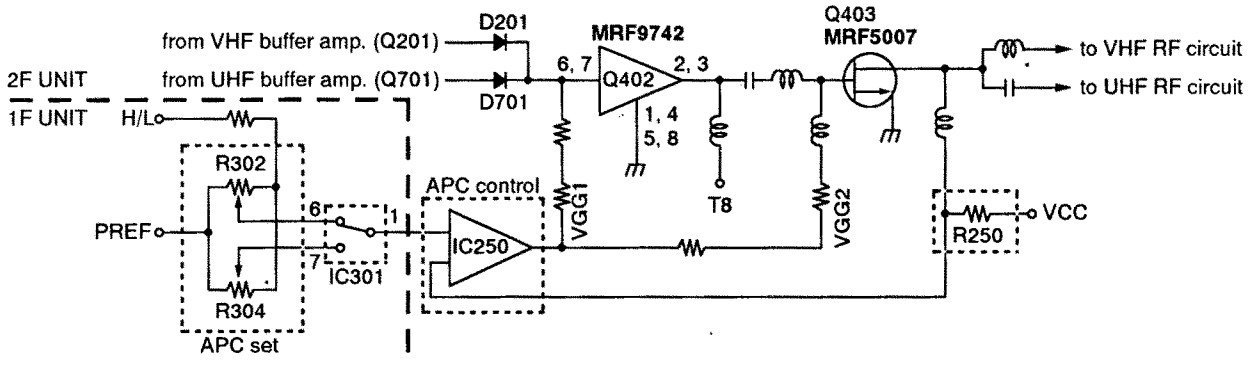

An RF signal from the band switch (D351, D352) is buffer-amplified at Q201 (for VHF) or Q701 (for UHF) and then applied to the drive amplifier (PA board Q402) via the other band switch (D201, D701). The applied RF signal from the band switch is amplified at a drive amplifier (Q402) and then amplified again at the power amplifier (Q403).

The amplified RF signal is passed though the low-pass filter (VHF) or high-pass filter (UHF), and then applied to the antenna connector via the transmit/receive switching circuit (D51, D52, D202 for VHF, D551, D552, D723, D724 for UHF).

4-2-4 APC CIRCUIT (1F AND 2F UNITS)

The APC circuit stabilizes transmit output power and selects HIGH and LOW output power. The APC circuit consists of APC sensor, APC control (1F unit) and APC set (2F unit) circuits.

The APC sensor circuit (1F unit R250) detects a driving current from a drive voltage at the PA board. The detected current is applied to the ope-amplifier IC (1F unit IC250 pin 2) in the APC control circuit, and compared with a "PSET" voltage which is supplied from the APC set circuit (2F unit IC301). The output voltage from pin 1 of IC250 is applied to the APC control circuit (1F unit Q255 base) to control "VGGC" voltage.

The "VGGC" APC control signal is separated for VHF (VGG1) and UHF (VGG2) by resistors. The VGG1 line is for the APC control signal for the drive amplifier and the VGG2 line is for the power amplifier.

Low output power is obtained by changing the "PSET" voltage coming from pin 1 of IC301 on the 2F unit. The "PSET" voltage is controlled by power set pots (R302 for VHF, R304 for UHF) and an "H/L" signal via the CPU (LOGIC unit pin 56). A thermistor (R266) controls APC reference voltage ("PREF" voltage) to reduce the output power when the temperature is increased.

4-2-5 ANTENNA SWITCHING CIRCUIT (1F UNIT)

The antenna switching circuit applies receive signals to the receiver circuit and transmit signals to the antenna connector.

VHF ANTENNA SWITCHING CIRCUIT

When transmitting, D51, D52 and D202 are turned ON. The signal passes though the low-pass filter (L11, L12, C16–C22) and is then applied to the antenna connector. The low-pass filter suppresses high harmonic components.

UHF ANTENNA SWITCHING CIRCUIT

When transmitting, D723, D724, D551 and D552 are turned ON. The signal passes though the low-pass (L8, L9, C10–C14) and high-pass (L2, L3, C1–C5) filters and is then applied to the antenna connector. The high-pass filter suppresses low harmonic components.

4-3 PLL CIRCUITS

4-3-1 VHF PLL CIRCUIT (1F UNIT)

The oscillated signal at the VCO circuit (DUAL VCO board Q304, Q305, D303) is amplified at a buffer-amplifier (Q306) and is again amplified at another buffer-amplifier (Q352). The amplified signal is applied to the PLL IC (IC851 pin 2), and then divided by serial data from the CPU and phase-detected with the divided reference frequency. The phase difference is output as pulses.

The output signals from IC851 (pin 8) are converted to DC voltages (lock voltage) by the loop filter (R366, C362) and are then fed back to the VHF VCO circuit to stabilize the VCO frequency.

The DC voltage is also applied to the receiver tuned bandpass filters as a "VTUNE" signal.

PLL CIRCUIT

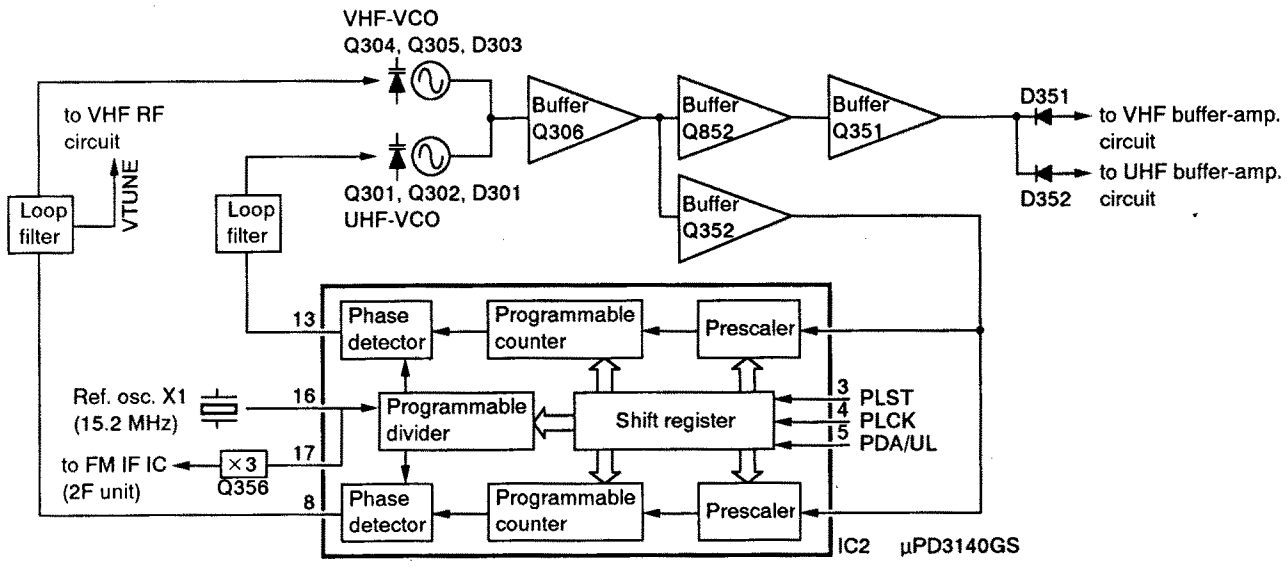

4-3-2 UHF PLL CIRCUIT (1F UNIT)

The oscillated signal at the VCO circuit (DUAL VCO board Q301, Q302, D301) is amplified at a buffer-amplifier (Q306) and is again amplified at another buffer-amplifier (Q352). The amplified signal is applied to the PLL IC (IC851 pin 19), and then divided by serial data from the CPU. It is the phase-detected with the divided reference frequency and the phase difference is output as pulses.

The output signals from IC851 (pin 13) are converted to DC voltages (lock voltage) by the loop filter (R866, C862) and are then fed back to the UHF VCO circuit to stabilize the VCO frequency.

4-4 POWER SUPPLY CIRCUITS

VOLTAGE LINE

Line	Description
HV	The voltage from the external power supply or attached battery pack.
VCC	The same voltage as the HV line (external power supply or battery pack) which is controlled by the power switch ([POWER] control).
+3CPU	Common 3 V converted from the VCC line by the +3CPU regulator IC (LOGIC unit IC2). The output voltage is supplied to the +3C, R3 and T4 regulator circuits, etc.
+3C	Common 3 V converted from the VCC line by the +3C regulator circuit (LOGIC unit Q4, Q5) using the +3CPU regulator (LOGIC unit IC2).
R3	3 V for receiver circuit converted from the VCC line by the R3 regulator circuit (2F unit Q4, Q5).
T4	4 V for transmitter circuit converted from the VCC line by the T4 regulator circuit (1F unit Q702, Q703). The T4 regulator circuit controlled by the CPU (LOGIC unit IC1 pin 45) via T4 control regulator circuit (1F unit Q704).
T8	8 V for drive amplifier circuit converted from the VCC line by the T8 regulator circuit (1F unit Q100, Q101, D100).

4-5 OTHER CIRCUITS

4-5-1 TONE SQUELCH CIRCUIT (LOGIC UNIT)

A portion of the detected audio signals from the "DETO" line are passed through the low-pass filter (IC13). The filtered signal is then applied to the CPU (IC1 pin 4), and is compared with the programmed tone signal. The CPU (IC1) outputs control signals to the AF mute and AF regulator circuits to open the squelch when a matched tone signal is received.

The programmed subaudible tone signal is output from the CPU (LOGIC unit IC1 pin 9) directly when transmitting with a tone.

4-6 PORT ALLOCATIONS

CPU (LOGIC UNIT)

Pin number	Port name	Description
2	REMOTE	Input port for remote control signals from an optional HM-75A microphone via the [EXT MIC] jack.
3	SD	Input port for detected S-meter signals from the IC101 (pin 12) on the 2F unit.
4	CTCIN	Input port for received CTCSS tone signals.
5	PCON	Output port for +3C regulator circuit control signals. "HIGH": Power ON
6	PLST	Outputs PLL strobe signals.
7	PLCK/ECK	Output port for clock signals to PLL and EEPROM ICs.
8	UL/PDA	DATA bus line for PLL. • Outputs PLL DATA when PLL is locked. • When PLL is unlocked, PLL IC releases the port being pulled up, therefore, the CPU receives "HIGH" level signal.
9	CTCSS	Output port for CTCSS tone signals.
10	DTMF	Output port for: • Beep audio signals while receiving. • DTMF signals or 1750 Hz tone signal while transmitting. (according to versions)
12	NOISE	Inputs pulse signals for noise squelch from the IC101 on the 1F unit.
17	LOCK	Input port for the [LOCK] switch. "LOW": [LOCK] switch is ON.
21	DIUD	Inputs up/down signals from the [DIAL] control.
22	DICK	Input port for dial clock signals.
23	POWER	Input port for the [POWER] switch. "LOW": [POWER] switch is pushed.
24	CONT	Outputs LCD contrast control signals.
28–31	KR3–KR0	Input ports for key matrix.
32	PTT	Input port for the PTT control circuit. "HIGH": When transmitting.

Pin number	Port name	Description
33	RESET	Input port for reset circuit (LOGIC unit IC3).
39	CFC	Outputs control signals to the power supply of the CTCSS bandpass filter (LOGIC unit Q45). "LOW" : Activates the BPF.
40	ESIO	DATA bus line for the EEPROM (LOGIC unit IC15) data signals.
41	BLED	Outputs [BUSY] LED control signals. "HIGH" : The LED lights.
42	LIGHT	Outputs LCD backlight control signals. "HIGH" : The backlight lights.
43	MICC	Output port for the microphone amplifier (2F unit IC12). "LOW" : Activates the mic. amp.
44	MM/RM	Outputs a mute signal. 【MM】: Microphone mute for DTMF or 1750 Hz tone while transmitting. 【RM】: Audio mute for squelch circuit while receiving. "HIGH" : To mute one of above.
46	TXSEL	Outputs transmit frequency band control signals. "HIGH" : UHF band "LOW" : VHF band
47	HVCO	Output port for the UHF band VCO (DUAL-VCO board Q301, Q302) control signals. "HIGH" : Activates the UHF-VCO.
48	LVCO	Output port for the VHF band VCO (DUAL-VCO board Q304, Q305) control signals. "HIGH" : Activates the VHF-VCO.
49	SHIFT	Output port for SHIFT signals to the shift switches (1F unit Q354, Q854). "HIGH" : Transmit on VHF "LOW" : Transmit on UHF
55	AFON	Outputs control signals to the AF regulator circuit (2F unit Q151, Q152). "HIGH" : Activates the AF amplifier.
56	H/L	Output port for the TX output power (High or Low) select signals. "LOW" : High power is selected.

SECTION 5 ADJUSTMENT PROCEDURES

5-1 PLL AND TRANSMITTER ADJUSTMENTS

ADJUSTMENT		ADJUSTMENT CONDITIONS	MEASUREMENT		VALUE	ADJUSTMENT	
			UNIT	LOCATION		UNIT	ADJUST
PLL LOCK VOLTAGE	1	• Displayed frequency: 145.000 MHz • Receiving	1F	Connect a digital multimeter or an oscilloscope to the "VLV".	1.1 V	DUAL -VCO	L303
	2	• Transmitting			1.3 V ±0.4 V		Verify
	3	• Displayed frequency: 440.000 MHz (USA version) 430.000 MHz (Other versions) • Receiving		Connect a digital multimeter or an oscilloscope to the "ULV".	2.1 V (USA version) 1.8 V (Other versions)		L301
	4	• Transmitting			2.1 V ±0.2 V (USA version) 1.8 V ±0.2 V (Other versions)		Verify
PLL REFERENCE FREQUENCY	1	• Displayed frequency: 450.000 MHz (USA version) 440.000 MHz (Other versions) • Transmitting	Top panel	Loosely couple a frequency counter to the antenna connector.	450.000 MHz (USA version) 440.000 MHz (Other versions)	1F	C369
OUTPUT POWER	1	• Displayed frequency: 145.000 MHz • Output power: High • Transmitting	Top panel	Connect an RF power meter to the antenna connector.	4.0 W	2F	R302
	2	• Displayed frequency: 445.000 MHz (USA version) 435.000 MHz (Other versions) • Output power: High • Transmitting			3.0 W		R304
FM DEVIATION	1	• Displayed frequency: 145.000 MHz • Connect an audio generator to the [MIC] connector and set as: 1 kHz/95 mV • Set an FM deviation meter as: HPF : OFF LPF : 20 kHz De-emphasis : OFF Detector : (P – P)/2 • Output power: High • Transmitting	Top panel	Connect an FM deviation meter to the antenna connector through an attenuator.	±4.6 kHz	2F	R308
	2	• Displayed frequency: 445.000 MHz (USA version) 435.000 MHz (Other versions) • Output power: High • Transmitting			±4.6 kHz		R314
DTMF DEVIATION (IC-T7A only)	1	• Displayed frequency: 445.000 MHz (USA version) 435.000 MHz (Other versions) • Push [D] key while transmitting	Top panel	Connect an FM deviation meter to the antenna connector through an attenuator.	±3.5 kHz	LOGIC	R147
TONE CALL DEVIATION (IC-T7E only)	1	• Displayed frequency: 435.000 MHz • Push [TONE] key while transmitting	Top panel	Connect an FM deviation meter to the antenna connector through an attenuator.	±3.5 kHz	LOGIC	R147

5-2 RECEIVER ADJUSTMENT

ADJUSTMENT		ADJUSTMENT CONDITIONS	MEASUREMENT		VALUE	ADJUSTMENT	
			UNIT	LOCATION		UNIT	ADJUST
VHF SENSITIVITY	1	• Displayed frequency: 145.000 MHz • Connect a SSG to the antenna connector and set as: Level : 1.0 mV* (−47 dBm) Mod. : 1 kHz (±3.5 kHz Dev.) • Receiving	2F	Connect a digital multimeter or oscilloscope to the check point "S".	Maximum level	2F	Adjust in sequence L53, L54, L55
UHF SENSITIVITY	1	• Displayed frequency: 445.000 MHz (USA version) 435.000 MHz (Other versions) • Connect a SSG to the antenna connector and set as: Level : 1.0 mV* (−47 dBm) Mod. : OFF • Receiving	2F	Connect a digital multimeter or oscilloscope to the CP1.	1.0 V	2F	L102
SQUELCH LEVEL	1	• Displayed frequency: any • Connect an SSG to the antenna connector and set as: Level : 0.11 µV* (−126 dBm) Mod. : 1 kHz (±3.5 kHz Dev.) • Pre-set the R504 to maximum CW. • Receiving	Speaker		At the point where the AF signal just disappears.	2F	R504
S-METER	1	• Displayed frequency: 445.000 MHz (USA version) 435.000 MHz (Other versions) • Connect an SSG to the antenna connector and set as: Level : 0.5 µV* (−113 dBm) Mod. : 1 kHz (±3.5 kHz Dev.) • Connect a terminator to the [EXT SP] jack. • Receiving	Front panel			Push and hold the [CALL] key.	
	2	• Set an SSG output level for the S-meter to S3 (4 dots).	SSG	Output level	0.32 to 0.79 µV (−117 to −109 dBm)		Verify

*This output level of a standard signal generator (SSG) is indicated as the SSG's open circuit.

• **2F UNIT**

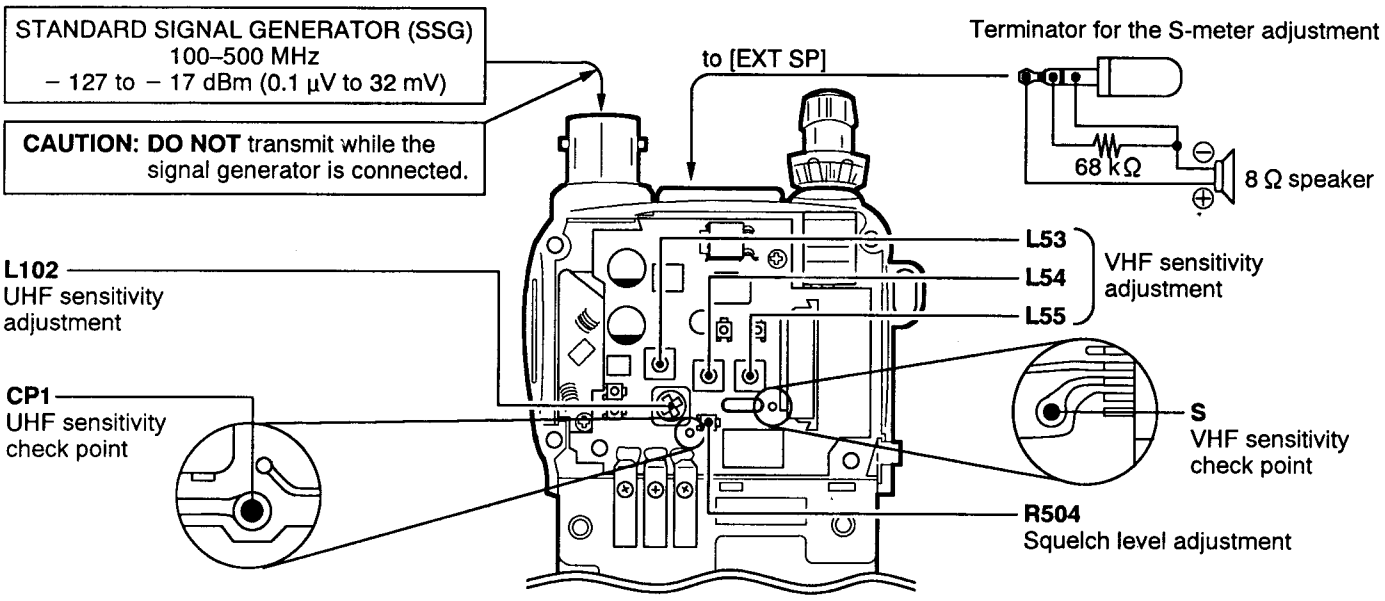

• **1F UNIT**

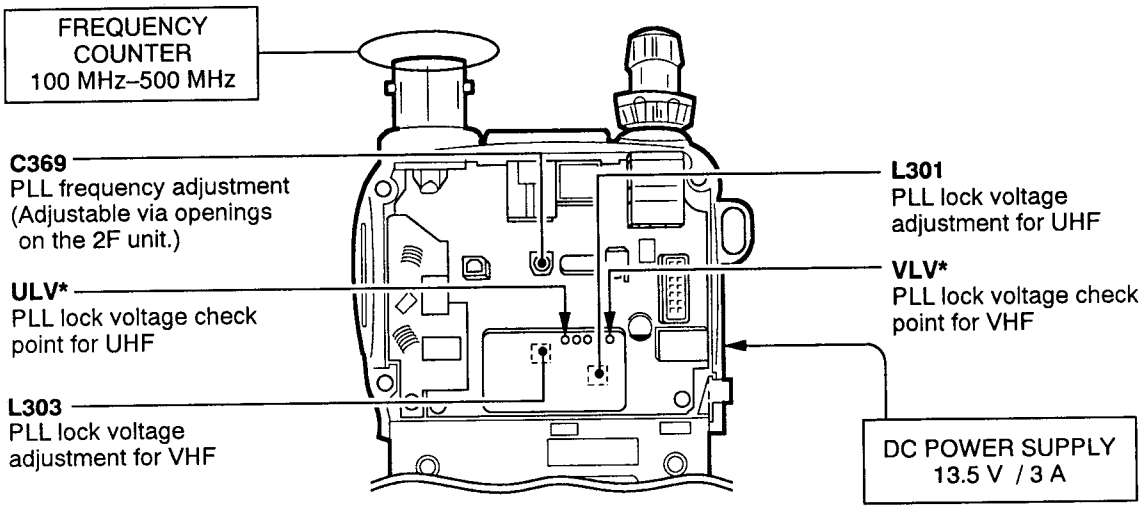

*Located on the underside of the 1F unit.

• **2F UNIT**

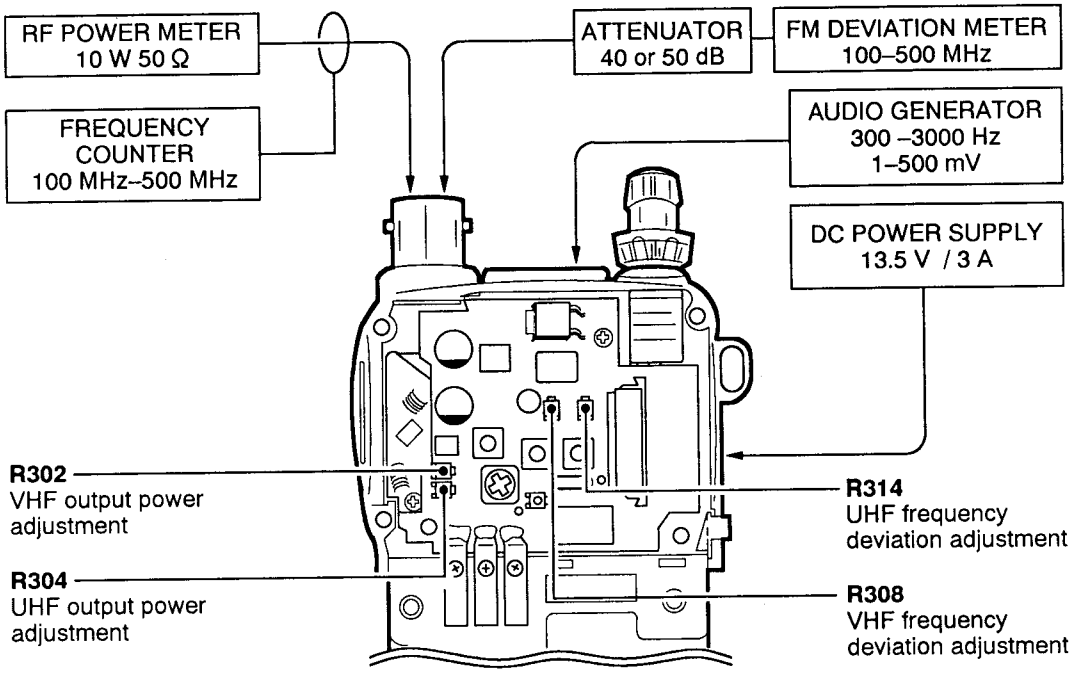

• **LOGIC UNIT**

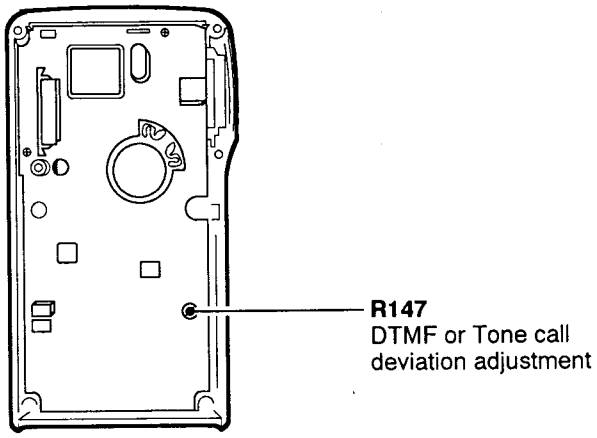

SECTION 6 PARTS LIST

[1F UNIT]

REF. NO.	ORDER NO.	DESCRIPTION	
IC250	1110002700	S.IC	NJM2904M-T1
IC851	1130007610	S.IC	μPD3140GS-E1 (DS8)
Q100	1520000650	S.TRANSISTOR	2SB1201-S-TL
Q101	1530002280	S.TRANSISTOR	2SC4081 T107 S
Q201	1530000370	S.TRANSISTOR	2SC3356-T2B
Q202	1510000670	S.TRANSISTOR	2SA1588-GR (TE85R)
Q203	1590001140	S.TRANSISTOR	UN9210(TX)
Q204	1530002280	S.TRANSISTOR	2SC4081 T107 S
Q250	1530002280	S.TRANSISTOR	2SC4081 T107 S
Q253	1590001050	S.TRANSISTOR	DTC114TU T107
Q255	1520000430	S.TRANSISTOR	2SB1462-R(TX)
Q351	1530003310	S.TRANSISTOR	2SC5107-O (TE85R)
Q352	1530003310	S.TRANSISTOR	2SC5107-O (TE85R)
Q353	1590001690	S.TRANSISTOR	UN9115(TX)
Q354	1590001140	S.TRANSISTOR	UN9210(TX)
Q355	1560000540	S.FET	2SK880-Y (TE85R)
Q356	1530002280	S.TRANSISTOR	2SC4081 T107 S
Q357	1590001690	S.TRANSISTOR	UN9115(TX)
Q701	1530000370	S.TRANSISTOR	2SC3356-T2B
Q702	1520000460	S.TRANSISTOR	2SB1132 T100 R
Q703	1540000350	S.TRANSISTOR	2SD2216-S(TX)
Q704	1590001150	S.TRANSISTOR	UN9211(TX)
Q705	1510000670	S.TRANSISTOR	2SA1588-GR (TE85R)
Q852	1530002560	S.TRANSISTOR	2SC4403-3-TL
Q853	1590001690	S.TRANSISTOR	UN9115(TX)
Q854	1590001140	S.TRANSISTOR	UN9210(TX)
D1	1790001260	S.DIODE	MA2S077-(TX)
D2	1790001260	S.DIODE	MA2S077-(TX)
D51	1790001260	S.DIODE	MA2S077-(TX)
D52	1790001260	S.DIODE	MA2S077-(TX)
D100	1790001010	S.ZENER	MA8043-L(TX)
D201	1790001260	S.DIODE	MA2S077-(TX)
D202	1790001260	S.DIODE	MA2S077-(TX)
D250	1730002260	S.ZENER	MA8030-H(TX)
D251	1790001010	S.ZENER	MA8043-L(TX)
D351	1790001260	S.DIODE	MA2S077-(TX)
D352	1790001260	S.DIODE	MA2S077-(TX)
D353	1790001260	S.DIODE	MA2S077-(TX)
D354	1790000840	S.DIODE	MA132WA(TX)
D551	1790001260	S.DIODE	MA2S077-(TX)
D552	1790001260	S.DIODE	MA2S077-(TX)
D701	1790001260	S.DIODE	MA2S077-(TX)
D702	1790000860	S.DIODE	MA133(TX)
D703	1790001250	S.DIODE	MA2S111-(TX)
D722	1710000850	S.DIODE	HVU132TRF
D723	1710000850	S.DIODE	HVU132TRF
D724	1710000850	S.DIODE	HVU132TRF
D725	1710000850	S.DIODE	HVU132TRF
D901	1750000540	S.DIODE	RB060L-40 TE-25
X851	6050009430	XTAL	CR-515 (15.200000 MHz)
L1	6200005940	S.COIL	NLH252018T-R10J 0.1U
L2	6200005850	S.COIL	NLH252018T-018J 18N
L3	6200005860	S.COIL	NLH252018T-022J 22N
L5	6200004350	S.COIL	LL1608-F10NK
L6	6200004350	S.COIL	LL1608-F10NK
L7	6200005840	S.COIL	NLH252018T-015J 15N
L8	6200005860	S.COIL	NLH252018T-022J 22N
L9	6200005850	S.COIL	NLH252018T-018J 18N
L10	6200005890	S.COIL	NLH252018T-039J 39N
L11	6200005910	S.COIL	NLH252018T-056J 56N
L12	6200005910	S.COIL	NLH252018T-056J 56N
L13	6200004480	S.COIL	MLF1608D R82K-T

[1F UNIT]

REF. NO.	ORDER NO.	DESCRIPTION	
L51	6200005910	S.COIL	NLH252018T-056J 56N
L52	6200005910	S.COIL	NLH252018T-056J 56N
L201	6200004480	S.COIL	MLF1608D R82K-T
L202	6200005930	S.COIL	NLH252018T-082J 82N
L203	6200003590	S.COIL	EXCCL3225U1
L204	6200003590	S.COIL	EXCCL3225U1
L205	6200004480	S.COIL	MLF1608D R82K-T
L352	6200003550	S.COIL	MLF1608A 4R7K-T
L353	6200003550	S.COIL	MLF1608A 4R7K-T
L354	6200004480	S.COIL	MLF1608D R82K-T
L355	6200004480	S.COIL	MLF1608D R82K-T
L551	6200005850	S.COIL	NLH252018T-018J 18N
L552	6200005850	S.COIL	NLH252018T-018J 18N
L701	6200004370	S.COIL	LL1608-F15NK
L702	6200005830	S.COIL	NLH252018T-012J 12N
L703	6200004380	S.COIL	LL1608-F18NK
L723	6200004480	S.COIL	MLF1608D R82K-T
L724	6200004480	S.COIL	MLF1608D R82K-T
R1	7030007270	S.RESISTOR	ERJ2GEJ 151 X (150 Ω)
R100	7030005040	S.RESISTOR	ERJ2GEJ 472 X (4.7 kΩ)
R101	7030005120	S.RESISTOR	ERJ2GEJ 102 X (1 kΩ)
R201	7030004980	S.RESISTOR	ERJ2GEJ 101 X (100 Ω)
R202	7030007270	S.RESISTOR	ERJ2GEJ 151 X (150 Ω)
R203	7030005040	S.RESISTOR	ERJ2GEJ 472 X (4.7 kΩ)
R204	7030005530	S.RESISTOR	ERJ2GEJ 100 X (10 Ω)
R205	7030007340	S.RESISTOR	ERJ2GEJ 153 X (15 kΩ)
R207	7030005040	S.RESISTOR	ERJ2GEJ 472 X (4.7 kΩ)
R208	7030004980	S.RESISTOR	ERJ2GEJ 101 X (100 Ω)
R209	7030005040	S.RESISTOR	ERJ2GEJ 472 X (4.7 kΩ)
R210	7030004980	S.RESISTOR	ERJ2GEJ 101 X (100 Ω)
R250	7030007330	S.RESISTOR	ERJ1WRSJR15U (0.15 Ω)
R251	7030007610	S.RESISTOR	RR0510R-683-D (68 kΩ)
R252	7030005840	S.RESISTOR	RR0510R-473-D (47 kΩ)
R258	7030007340	S.RESISTOR	ERJ2GEJ 153 X (15 kΩ)
R259	7030005050	S.RESISTOR	ERJ2GEJ 103 X (10 kΩ)
R260	7030004980	S.RESISTOR	ERJ2GEJ 101 X (100 Ω)
R261	7030005160	S.RESISTOR	ERJ2GEJ 105 X (1 MΩ)
R262	7030005220	S.RESISTOR	ERJ2GEJ 223 X (22 kΩ)
R263	7030005050	S.RESISTOR	ERJ2GEJ 103 X (10 kΩ)
R264	7030007290	S.RESISTOR	ERJ2GEJ 222 X (2.2 kΩ)
R265	7030005040	S.RESISTOR	ERJ2GEJ 472 X (4.7 kΩ)
R266	7510001000	S.THERMISTOR	TBPS1R154K475H5Q
R267	7030007340	S.RESISTOR	ERJ2GEJ 153 X (15 kΩ)
R281	7030005050	S.RESISTOR	ERJ2GEJ 103 X (10 kΩ)
R282	7030007340	S.RESISTOR	ERJ2GEJ 153 X (15 kΩ)
R283	7030005090	S.RESISTOR	ERJ2GEJ 104 X (100 kΩ)
R284	7030007260	S.RESISTOR	ERJ2GEJ 330 X (33 Ω)
R285	7030005120	S.RESISTOR	ERJ2GEJ 102 X (1 kΩ)
R350	7030005530	S.RESISTOR	ERJ2GEJ 100 X (10 Ω)
R352	7030005040	S.RESISTOR	ERJ2GEJ 472 X (4.7 kΩ)
R354	7030005220	S.RESISTOR	ERJ2GEJ 223 X (22 kΩ)
R355	7030007260	S.RESISTOR	ERJ2GEJ 330 X (33 Ω)
R356	7030005300	S.RESISTOR	ERJ2GEJ 150 X (15 Ω)
R357	7030005300	S.RESISTOR	ERJ2GEJ 150 X (15 Ω)
R358	7030004980	S.RESISTOR	ERJ2GEJ 101 X (100 Ω)
R359	7030005840	S.RESISTOR	RR0510R-473-D (47 kΩ)
R360	7030004990	S.RESISTOR	ERJ2GEJ 221 X (220 Ω)
R361	7030004970	S.RESISTOR	ERJ2GEJ 470 X (47 Ω)
R362	7030005100	S.RESISTOR	ERJ2GEJ 154 X (150 kΩ)
R363	7030005110	S.RESISTOR	ERJ2GEJ 224 X (220 kΩ)
R364	7030005110	S.RESISTOR	ERJ2GEJ 224 X (220 kΩ)
R365	7030007280	S.RESISTOR	ERJ2GEJ 331 X (330 Ω)
R366	7030005050	S.RESISTOR	ERJ2GEJ 103 X (10 kΩ)
R367	7030005030	S.RESISTOR	ERJ2GEJ 152 X (1.5 kΩ)
R368	7030005010	S.RESISTOR	ERJ2GEJ 681 X (680 Ω)
R369	7030005090	S.RESISTOR	ERJ2GEJ 104 X (100 kΩ)
R370	7030005050	S.RESISTOR	ERJ2GEJ 103 X (10 kΩ)
R371	7030007280	S.RESISTOR	ERJ2GEJ 331 X (330 Ω)

S.=Surface mount

[1F UNIT]

REF. NO.	ORDER NO.	DESCRIPTION	
R372	7030005090	S.RESISTOR	ERJ2GEJ 104 X (100 kΩ)
R373	7030005840	S.RESISTOR	RR0510R-473-D (47 kΩ)
R374	7030005090	S.RESISTOR	ERJ2GEJ 104 X (100 kΩ)
R700	7030005010	S.RESISTOR	ERJ2GEJ 681 X (680 Ω)
R701	7030005040	S.RESISTOR	ERJ2GEJ 472 X (4.7 kΩ)
R702	7030005040	S.RESISTOR	ERJ2GEJ 472 X (4.7 kΩ)
R704	7030005530	S.RESISTOR	ERJ2GEJ 100 X (10 Ω)
R705	7030005050	S.RESISTOR	ERJ2GEJ 103 X (10 kΩ)
R708	7030004980	S.RESISTOR	ERJ2GEJ 101 X (100 Ω)
R709	7030005040	S.RESISTOR	ERJ2GEJ 472 X (4.7 kΩ)
R710	7030005040	S.RESISTOR	ERJ2GEJ 472 X (4.7 kΩ)
R721	7030007290	S.RESISTOR	ERJ2GEJ 222 X (2.2 kΩ)
R724	7030007260	S.RESISTOR	ERJ2GEJ 330 X (33 Ω)
R726	7030005290	S.RESISTOR	ERJ2GEJ 682 X (6.8 kΩ)
R727	7030007270	S.RESISTOR	ERJ2GEJ 151 X (150 Ω)
R858	7030004980	S.RESISTOR	ERJ2GEJ 101 X (100 Ω)
R859	7030005840	S.RESISTOR	RR0510R-473-D (47 kΩ)
R860	7030007270	S.RESISTOR	ERJ2GEJ 151 X (150 Ω)
R861	7030004990	S.RESISTOR	ERJ2GEJ 221 X (220 Ω)
R862	7030005060	S.RESISTOR	ERJ2GEJ 333 X (33 kΩ)
R863	7030005230	S.RESISTOR	ERJ2GEJ 334 X (330 kΩ)
R864	7030005840	S.RESISTOR	RR0510R-473-D (47 kΩ)
R866	7030005290	S.RESISTOR	ERJ2GEJ 682 X (6.8 kΩ)
R867	7030007300	S.RESISTOR	ERJ2GEJ 332 X (3.3 kΩ)
R868	7030005010	S.RESISTOR	ERJ2GEJ 681 X (680 Ω)
R902	7030000330	S.RESISTOR	MCR10EZHJ 390 Ω (391)
C1	4030009710	S.CERAMIC	C1005 CH 1E 070D-T-A
C2	4030010090	S.CERAMIC	C1005 CH 1E 560J-T-A
C3	4030009840	S.CERAMIC	C1005 CH 1E 060D-T-A
C4	4030009770	S.CERAMIC	C1005 CH 1E 220J-T-A
C5	4030009740	S.CERAMIC	C1005 CH 1E 100D-T-A
C6	4030011640	S.CERAMIC	C1005 CH 1E 010B-T-A
C7	4030011640	S.CERAMIC	C1005 CH 1E 010B-T-A
C8	4030011660	S.CERAMIC	C1005 CH 1E 020B-T-A
C9	4030011640	S.CERAMIC	C1005 CH 1E 010B-T-A
C10	4030009710	S.CERAMIC	C1005 CH 1E 070D-T-A
C11	4030011640	S.CERAMIC	C1005 CH 1E 010B-T-A
C12	4030009720	S.CERAMIC	C1005 CH 1E 080D-T-A
C14	4030011700	S.CERAMIC	C1005 CH 1E 040C-T-A
C15	4030009810	S.CERAMIC	C1005 JB 1E 102K-T-A
C16	4030011640	S.CERAMIC	C1005 CH 1E 010B-T-A
C17	4030009770	S.CERAMIC	C1005 CH 1E 220J-T-A
C18	4030011700	S.CERAMIC	C1005 CH 1E 040B-T-A
C19	4030009780	S.CERAMIC	C1005 CH 1E 270J-T-A
C20	4030011660	S.CERAMIC	C1005 CH 1E 020B-T-A
C21	4030009760	S.CERAMIC	C1005 CH 1E 150J-T-A
C22	4030009810	S.CERAMIC	C1005 JB 1E 102K-T-A
C23	4030009810	S.CERAMIC	C1005 JB 1E 102K-T-A
C24	4030009810	S.CERAMIC	C1005 JB 1E 102K-T-A
C51	4030009770	S.CERAMIC	C1005 CH 1E 220J-T-A
C52	4030009780	S.CERAMIC	C1005 CH 1E 270J-T-A
C53	4030009750	S.CERAMIC	C1005 CH 1E 120J-T-A
C100	4030009810	S.CERAMIC	C1005 JB 1E 102K-T-A
C101	4030006860	S.CERAMIC	C1608 JB 1H 102K-T-A
C102	4550006080	S.TANTALUM	TEMSVB2 1C 106M-8L
C207	4030009830	S.CERAMIC	C1005 CH 1E 180J-T-A
C209	4030006860	S.CERAMIC	C1608 JB 1H 102K-T-A
C210	4550006080	S.TANTALUM	TEMSVB2 1C 106M-8L
C211	4030006860	S.CERAMIC	C1608 JB 1H 102K-T-A
C212	4030009810	S.CERAMIC	C1005 JB 1E 102K-T-A
C213	4030006860	S.CERAMIC	C1608 JB 1H 102K-T-A
C214	4030006860	S.CERAMIC	C1608 JB 1H 102K-T-A
C215	4030006860	S.CERAMIC	C1608 JB 1H 102K-T-A
C216	4030009810	S.CERAMIC	C1005 JB 1E 102K-T-A
C231	4030009810	S.CERAMIC	C1005 JB 1E 102K-T-A
C232	4030006860	S.CERAMIC	C1608 JB 1H 102K-T-A
C233	4030006860	S.CERAMIC	C1608 JB 1H 102K-T-A
C234	4030009810	S.CERAMIC	C1005 JB 1E 102K-T-A
C235	4030009810	S.CERAMIC	C1005 JB 1E 102K-T-A
C236	4030006860	S.CERAMIC	C1608 JB 1H 102K-T-A
C254	4030006860	S.CERAMIC	C1608 JB 1H 102K-T-A
C267	4550006050	S.TANTALUM	TEMSVA 0J 106M8L
C268	4030006860	S.CERAMIC	C1608 JB 1H 102K-T-A
C270	4550006050	S.TANTALUM	TEMSVA 0J 106M8L

[1F UNIT]

REF. NO.	ORDER NO.	DESCRIPTION	
C301	4030009810	S.CERAMIC	C1005 JB 1E 102K-T-A
C350	4030009810	S.CERAMIC	C1005 JB 1E 102K-T-A
C351	4030009810	S.CERAMIC	C1005 JB 1E 102K-T-A
C354	4030009810	S.CERAMIC	C1005 JB 1E 102K-T-A
C355	4550006120	S.TANTALUM	TEMSVA 0G 226M-8L
C356	4030009810	S.CERAMIC	C1005 JB 1E 102K-T-A
C357	4030009810	S.CERAMIC	C1005 JB 1E 102K-T-A
C358	4030009810	S.CERAMIC	C1005 JB 1E 102K-T-A
C359	4030009810	S.CERAMIC	C1005 JB 1E 102K-T-A
C360	4030010740	S.CERAMIC	C1608 JB 1A 104K-T-A
C361	4030009810	S.CERAMIC	C1005 JB 1E 102K-T-A
C362	4550000530	S.TANTALUM	TESVA 1V 104M1-8L
C364	4550003080	S.TANTALUM	TEMSVA 1A 335M-8L
C365	4030009810	S.CERAMIC	C1005 JB 1E 102K-T-A
C366	4030011320	S.CERAMIC	C1005 CH 1E 470J-T-A
C367	4030011320	S.CERAMIC	C1005 CH 1E 470J-T-A
C368	4030011320	S.CERAMIC	C1005 CH 1E 470J-T-A
C369	4610001890	S.TRIMMER	CTZ3E-20C-W1
C370	4030009770	S.CERAMIC	C1005 CH 1E 220J-T-A
C371	4030010280	S.CERAMIC	C1005 CH 1E 390J-T-A
C372	4030006860	S.CERAMIC	C1608 JB 1H 102K-T-A
C373	4030006860	S.CERAMIC	C1608 JB 1H 102K-T-A
C374	4030009730	S.CERAMIC	C1005 CH 1E 090D-T-A
C375	4030009810	S.CERAMIC	C1005 JB 1E 102K-T-A
C376	4030009710	S.CERAMIC	C1005 CH 1E 070D-T-A
C377	4030011680	S.CERAMIC	C1005 CH 1E 030B-T-A
C378	4030009710	S.CERAMIC	C1005 CH 1E 070D-T-A
C379	4030011700	S.CERAMIC	C1005 CH 1E 040B-T-A
C380	4030009780	S.CERAMIC	C1005 CH 1E 270J-T-A
C551	4030011680	S.CERAMIC	C1005 CH 1E 030B-T-A
C552	4030009740	S.CERAMIC	C1005 CH 1E 100D-T-A
C553	4030009710	S.CERAMIC	C1005 CH 1E 070D-T-A
C554	4030009810	S.CERAMIC	C1005 JB 1E 102K-T-A
C707	4030009700	S.CERAMIC	C1005 CH 1E 050C-T-A
C709	4030006860	S.CERAMIC	C1608 JB 1H 102K-T-A
C711	4550002890	S.TANTALUM	TESVA 1A 225M1-8L
C713	4030006860	S.CERAMIC	C1608 JB 1H 102K-T-A
C714	4030006860	S.CERAMIC	C1608 JB 1H 102K-T-A
C715	4030009700	S.CERAMIC	C1005 CH 1E 050C-T-A
C716	4030006860	S.CERAMIC	C1608 JB 1H 102K-T-A
C717	4030009700	S.CERAMIC	C1005 CH 1E 050C-T-A
C726	4030009810	S.CERAMIC	C1005 JB 1E 102K-T-A
C727	4030009810	S.CERAMIC	C1005 JB 1E 102K-T-A
C728	4030009810	S.CERAMIC	C1005 JB 1E 102K-T-A
C730	4030009810	S.CERAMIC	C1005 JB 1E 102K-T-A
C731	4030006860	S.CERAMIC	C1608 JB 1H 102K-T-A
C732	4030006860	S.CERAMIC	C1608 JB 1H 102K-T-A
C851	4030009810	S.CERAMIC	C1005 JB 1E 102K-T-A
C852	4030010740	S.CERAMIC	C1608 JB 1A 104K-T-A
C855	4550006120	S.TANTALUM	TEMSVA 0G 226M-8L
C856	4030009810	S.CERAMIC	C1005 JB 1E 102K-T-A
C857	4030009810	S.CERAMIC	C1005 JB 1E 102K-T-A
C858	4030009810	S.CERAMIC	C1005 JB 1E 102K-T-A
C859	4030009810	S.CERAMIC	C1005 JB 1E 102K-T-A
C860	4030010740	S.CERAMIC	C1608 JB 1A 104K-T-A
C861	4030009810	S.CERAMIC	C1005 JB 1E 102K-T-A
C862	4550000530	S.TANTALUM	TESVA 1V 104M1-8L
C864	4550002960	S.TANTALUM	TESVA 1C 155M1-8L
C865	4030009810	S.CERAMIC	C1005 JB 1E 102K-T-A
C901	4030006860	S.CERAMIC	C1608 JB 1H 102K-T-A
C903	4030006860	S.CERAMIC	C1608 JB 1H 102K-T-A
C904	4030007090	S.CERAMIC	C1608 CH 1H 470J-T-A
C905	4030006860	S.CERAMIC	C1608 JB 1H 102K-T-A
C906	4030006860	S.CERAMIC	C1608 JB 1H 102K-T-A
C907	4030006860	S.CERAMIC	C1608 JB 1H 102K-T-A
C908	4030006860	S.CERAMIC	C1608 JB 1H 102K-T-A
C909	4550006050	S.TANTALUM	TEMSVA 0J 106M8L
C910	4510004630	S.ELECTROLITIC	ECEV1CA100SR
S1	7600000190	ENCODER	TP96D96E20-15F-10KA -1810
J201	6910003840	CONNECTOR	IMSA-9230B-1-05Z003-T
J202	6910003840	CONNECTOR	IMSA-9230B-1-05Z003-T

S.=Surface mount

[1F UNIT]

REF. NO.	ORDER NO.	DESCRIPTION	
J901	6450000130	CONNECTOR	HSJ1102-01-540
J902	6450001060	CONNECTOR	HSJ1493-01-010
J903	6450000870	CONNECTOR	HEC2711-01-020
J904	6510018470	S.CONNECTOR	IL-WX-30PB-VF84-B-E900
J905	6510017630	S.CONNECTOR	53264-0690
W1	7120000380	JUMPER	JPW 01 R-01
W2	7030003860	S.JUMPER	ERJ3GE JPW V
W5	7030000010	S.JUMPER	MCR10EZHJ JPW (000)
EP1	0910047190	PCB	B 4796

[PA BOARD]

REF. NO.	ORDER NO.	DESCRIPTION	
Q402	1590002450	S.FET	MRF9742
Q403	1590002440	S.FET	MRF5007
L401	6110003210	S.COIL	LA-512
L402	6200005970	S.COIL	LQP11A 1N5C14
L403	6200004720	S.COIL	MLF1608D R10K-T
L404	6110003210	S.COIL	LA-512
L406	6110003170	S.COIL	LA-507
L407	6110003220	S.COIL	LA-511
R401	7030007250	S.RESISTOR	ERJ2GEJ 220 X (22 Ω)
R404	7030007260	S.RESISTOR	ERJ2GEJ 330 X (33 Ω)
R405	7030005300	S.RESISTOR	ERJ2GEJ 150 X (15 Ω)
C220	4030009770	S.CERAMIC	C1005 CH 1E 220J-T-A
C408	4030009810	S.CERAMIC	C1005 JB 1E 102K-T-A
C410	4030009810	S.CERAMIC	C1005 JB 1E 102K-T-A
C411	4030011320	S.CERAMIC	C1005 CH 1E 470J-T-A
C412	4030009810	S.CERAMIC	C1005 JB 1E 102K-T-A
C414	4030009810	S.CERAMIC	C1005 JB 1E 102K-T-A
C415	4030009810	S.CERAMIC	C1005 JB 1E 102K-T-A
C416	4030004910	S.CERAMIC	C2012 CH 1H 220J-T-A
C417	4030004870	S.CERAMIC	C2012 CH 1H 100D-T-A
C422	4030009810	S.CERAMIC	C1005 JB 1E 102K-T-A
C423	4030007110	S.CERAMIC	C1608 CH 1H 680J-T-A
W400	7030003860	S.JUMPER	ERJ3GE JPW V
EP401	0910047212	PCB	B 4783B

[DUAL-VCO BOARD]

REF. NO.	ORDER NO.	DESCRIPTION	
Q301	1530003260	S.TRANSISTOR	2SC5006-T1
Q302	1530003260	S.TRANSISTOR	2SC5006-T1
Q304	1530003320	S.TRANSISTOR	2SC5108-Y (TE85R)
Q305	1530003320	S.TRANSISTOR	2SC5108-Y (TE85R)
Q306	1530003320	S.TRANSISTOR	2SC5108-Y (TE85R)
D301	1720000370	S.VARICAP	HVU350TRF
D302	1790001260	S.DIODE	MA2S077-(TX)
D303	1790001290	S.VARICAP	MA304(TX)
D304	1790001260	S.DIODE	MA2S077-(TX)
L301	6110003180	COIL	LA-508
L302	6200004480	S.COIL	MLF1608D R82K-T
L303	6110003190	COIL	LA-509
L304	6200004480	S.COIL	MLF1608D R82K-T
R302	7030007290	S.RESISTOR	ERJ2GEJ 222 X (2.2 kΩ)
R303	7030005290	S.RESISTOR	ERJ2GEJ 682 X (6.8 kΩ)
R304	7030004980	S.RESISTOR	ERJ2GEJ 101 X (100 Ω)
R305	7030005290	S.RESISTOR	ERJ2GEJ 682 X (6.8 kΩ)
R306	7030004970	S.RESISTOR	ERJ2GEJ 470 X (47 Ω)
R307	7030004970	S.RESISTOR	ERJ2GEJ 470 X (47 Ω)
R311	7030005120	S.RESISTOR	ERJ2GEJ 102 X (1 kΩ)
R312	7030005290	S.RESISTOR	ERJ2GEJ 682 X (6.8 kΩ)
R313	7030004980	S.RESISTOR	ERJ2GEJ 101 X (100 Ω)
R314	7030005290	S.RESISTOR	ERJ2GEJ 682 X (6.8 kΩ)
R315	7030004990	S.RESISTOR	ERJ2GEJ 221 X (220 Ω)
R316	7030004970	S.RESISTOR	ERJ2GEJ 470 X (47 Ω)
R317	7030005840	S.RESISTOR	RR0510R-473-D (47 kΩ)
R318	7030004980	S.RESISTOR	ERJ2GEJ 101 X (100 Ω)
R319	7030005110	S.RESISTOR	ERJ2GEJ 224 X (220 kΩ)
R320	7030004990	S.RESISTOR	ERJ2GEJ 221 X (220 Ω)
R321	7030004980	S.RESISTOR	ERJ2GEJ 101 X (100 Ω)
C301	4030009780	S.CERAMIC	C1005 CH 1E 270J-T-A
C302	4030010080	S.CERAMIC	C1005 CH 1E 240J-T-A
C303	4030011670	S.CERAMIC	C1005 CH 1E 2R5B-T-A
C304	4030011670	S.CERAMIC	C1005 CH 1E 2R5B-T-A
C305	4030009810	S.CERAMIC	C1005 JB 1E 102K-T-A
C306	4030009810	S.CERAMIC	C1005 JB 1E 102K-T-A
C307	4030009810	S.CERAMIC	C1005 JB 1E 102K-T-A
C308	4030011720	S.CERAMIC	C1005 CH 1E R75B T000P
C311	4030009810	S.CERAMIC	C1005 JB 1E 102K-T-A
C312	4030009780	S.CERAMIC	C1005 CH 1E 270J-T-A
C313	4030009810	S.CERAMIC	C1005 JB 1E 102K-T-A
C314	4030011670	S.CERAMIC	C1005 CH 1E 2R5B-T-A
C315	4030011670	S.CERAMIC	C1005 CH 1E 2R5B-T-A
C316	4030009810	S.CERAMIC	C1005 JB 1E 102K-T-A
C317	4030009810	S.CERAMIC	C1005 JB 1E 102K-T-A
C318	4030009810	S.CERAMIC	C1005 JB 1E 102K-T-A
C319	4030011720	S.CERAMIC	C1005 CH 1E R75B T000P
C320	4030009770	S.CERAMIC	C1005 CH 1E 220J-T-A
C321	4030009810	S.CERAMIC	C1005 JB 1E 102K-T-A
C322	4030009810	S.CERAMIC	C1005 JB 1E 102K-T-A
C323	4030009810	S.CERAMIC	C1005 JB 1E 102K-T-A
C324	4030009810	S.CERAMIC	C1005 JB 1E 102K-T-A
C325	4030009810	S.CERAMIC	C1005 JB 1E 102K-T-A
J301	6510018640	CONNECTOR	IMSA-9230B-1-05Z064-T
J302	6510018640	CONNECTOR	IMSA-9230B-1-05Z064-T
EP301	0910046503	PCB	B 4731C

S.=Surface mount

[2F UNIT]

REF. NO.	ORDER NO.	DESCRIPTION	
IC101	1110003490	S.IC	TA31136FN(D,EL)
IC102	1130004200	S.IC	TC4S66F (TE85R)
IC151	1110001810	S.IC	TA7368F(TP1)
IC301	1130006220	S.IC	TC4W53FU (TE12L)
IC601	1110003370	S.IC	μPC2748T-E3
Q4	1590001170	S.TRANSISTOR	XP1501-(TX).AB
Q5	1510000670	S.TRANSISTOR	2SA1588-GR (TE85R)
Q51	1530003430	S.TRANSISTOR	2SC5226-4-TL
Q52	1530002560	S.TRANSISTOR	2SC4403-3-TL
Q53	1590001690	S.TRANSISTOR	UN9115(TX)
Q101	1530002600	S.TRANSISTOR	2SC4215-O (TE85R)
Q102	1590001170	S.TRANSISTOR	XP1501-(TX).AB
Q103	1540000350	S.TRANSISTOR	2SD2216-S(TX)
Q104	1540000350	S.TRANSISTOR	2SD2216-S(TX)
Q105	1590001690	S.TRANSISTOR	UN9115(TX)
Q151	1520000650	S.TRANSISTOR	2SB1201-S-TL
Q152	1590001170	S.TRANSISTOR	XP1501-(TX).AB
Q201	1530002920	S.TRANSISTOR	2SC4226-T2 R25
Q202	1530002560	S.TRANSISTOR	2SC4403-3-TL
Q305	1590001140	S.TRANSISTOR	UN9210(TX)
Q306	1590001770	S.TRANSISTOR	XP1213(TX)
Q307	1590002010	S.TRANSISTOR	XP1114(TX)
Q401	1530002560	S.TRANSISTOR	2SC4403-3-TL
Q403	1590001690	S.TRANSISTOR	UN9115(TX)
Q404	1590001690	S.TRANSISTOR	UN9115(TX)
Q601	1530002900	S.TRANSISTOR	2SC4228-T2 R45
Q602	1590002380	S.TRANSISTOR	XP1115(TX)
Q901	1520000460	S.TRANSISTOR	2SB1132 T100 R
Q902	1590002460	S.FET	HAT1004F-EL
D52	1790001290	S.VARICAP	MA304(TX)
D53	1790001290	S.VARICAP	MA304(TX)
D54	1790001290	S.VARICAP	MA304(TX)
D55	1750000530	S.DIODE	1SV271 (TPH3)
D101	1790001260	S.DIODE	MA2S077-(TX)
D102	1790001260	S.DIODE	MA2S077-(TX)
D103	1790001260	S.DIODE	MA2S077-(TX)
D201	1750000530	S.DIODE	1SV271 (TPH3)
D202	1790001260	S.DIODE	MA2S077-(TX)
D203	1790001260	S.DIODE	MA2S077-(TX)
D302	1790001250	S.DIODE	MA2S111-(TX)
D400	1790001260	S.DIODE	MA2S077-(TX)
D401	1790000840	S.DIODE	MA132WA(TX)
D402	1790000840	S.DIODE	MA132WA(TX)
D601	1790001260	S.DIODE	MA2S077-(TX)
D602	1790001260	S.DIODE	MA2S077-(TX)
D603	1790001260	S.DIODE	MA2S077-(TX)
D604	1790001260	S.DIODE	MA2S077-(TX)
D605	1790000850	S.DIODE	MA132WK(TX)
D606	1790001260	S.DIODE	MA2S077-(TX)
D607	1790001260	S.DIODE	MA2S077-(TX)
D902	1790000860	S.DIODE	MA133(TX)
D903	1790001240	S.DIODE	MA2S728-(TX)
D904	1790000670	S.DIODE	SB07-03C-TB
FI101	2020001270	CERAMIC	CFWM450E
FI201	2040001020	S.SAW	EFCH445MWNP1 [USA] only
	2040001000	S.SAW	EFCH435MWNP1 Other versions
FI401	2010001960	MONOLITHIC	FL-244
L53	6150004920	S.COIL	LS-518
L54	6150004920	S.COIL	LS-518
L55	6150004920	S.COIL	LS-518
L101	6200002710	S.COIL	ELJFC 1R8K-F
L102	6150004840	S.COIL	LS-510
L201	6200004370	S.COIL	LL1608-F15NK
L202	6200004380	S.COIL	LL1608-F18NK
L203	6200004360	S.COIL	LL1608-F12NK
L204	6200004360	S.COIL	LL1608-F12NK

[2F UNIT]

REF. NO.	ORDER NO.	DESCRIPTION	
L403	6200002710	S.COIL	ELJFC 1R8K-F
L603	6200004370	S.COIL	LL1608-F15NK
L604	6200004350	S.COIL	LL1608-F10NK
L605	6200004350	S.COIL	LL1608-F10NK
L606	6200004390	S.COIL	LL1608-F22NK
L607	6200004390	S.COIL	LL1608-F22NK
L609	6200004400	S.COIL	LL1608-F47NK
R5	7030005050	S.RESISTOR	ERJ2GEJ 103 X (10 kΩ)
R51	7030007610	S.RESISTOR	RR0510R-683-D (68 kΩ)
R52	7030005090	S.RESISTOR	ERJ2GEJ 104 X (100 kΩ)
R53	7030005590	S.RESISTOR	ERJ2GEJ 680 X (68 Ω)
R54	7030004980	S.RESISTOR	ERJ2GEJ 101 X (100 Ω)
R55	7030007280	S.RESISTOR	ERJ2GEJ 331 X (330 Ω)
R56	7030005050	S.RESISTOR	ERJ2GEJ 103 X (10 kΩ)
R57	7030005060	S.RESISTOR	ERJ2GEJ 333 X (33 kΩ)
R58	7030004970	S.RESISTOR	ERJ2GEJ 470 X (47 Ω)
R59	7030005090	S.RESISTOR	ERJ2GEJ 104 X (100 kΩ)
R60	7030005090	S.RESISTOR	ERJ2GEJ 104 X (100 kΩ)
R61	7030005050	S.RESISTOR	ERJ2GEJ 103 X (10 kΩ)
R62	7030005050	S.RESISTOR	ERJ2GEJ 103 X (10 kΩ)
R63	7030005050	S.RESISTOR	ERJ2GEJ 103 X (10 kΩ)
R64	7030005050	S.RESISTOR	ERJ2GEJ 103 X (10 kΩ)
R101	7030005840	S.RESISTOR	RR0510R-473-D (47 kΩ)
R102	7030005000	S.RESISTOR	ERJ2GEJ 471 X (470 Ω)
R103	7030005120	S.RESISTOR	ERJ2GEJ 102 X (1 kΩ)
R104	7030005080	S.RESISTOR	ERJ2GEJ 823 X (82 kΩ)
R105	7030005030	S.RESISTOR	ERJ2GEJ 152 X (1.5 kΩ)
R106	7030005110	S.RESISTOR	ERJ2GEJ 224 X (220 kΩ)
R107	7030005220	S.RESISTOR	ERJ2GEJ 223 X (22 kΩ)
R108	7030007340	S.RESISTOR	ERJ2GEJ 153 X (15 kΩ)
R110	7030005220	S.RESISTOR	ERJ2GEJ 223 X (22 kΩ)
R111	7030005220	S.RESISTOR	ERJ2GEJ 223 X (22 kΩ)
R112	7030005000	S.RESISTOR	ERJ2GEJ 471 X (470 Ω)
R113	7030005050	S.RESISTOR	ERJ2GEJ 103 X (10 kΩ)
R114	7030005050	S.RESISTOR	ERJ2GEJ 103 X (10 kΩ)
R115	7030005230	S.RESISTOR	ERJ2GEJ 334 X (330 kΩ)
R116	7030005000	S.RESISTOR	ERJ2GEJ 471 X (470 Ω)
R117	7030005840	S.RESISTOR	RR0510R-473-D (47 kΩ)
R118	7030005120	S.RESISTOR	ERJ2GEJ 102 X (1 kΩ)
R119	7030004980	S.RESISTOR	ERJ2GEJ 101 X (100 Ω)
R120	7030005220	S.RESISTOR	ERJ2GEJ 223 X (22 kΩ)
R121	7030005840	S.RESISTOR	RR0510R-473-D (47 kΩ)
R122	7030005110	S.RESISTOR	ERJ2GEJ 224 X (220 kΩ)
R123	7030005160	S.RESISTOR	ERJ2GEJ 105 X (1 MΩ)
R151	7030005530	S.RESISTOR	ERJ2GEJ 100 X (10 Ω)
R152	7030007270	S.RESISTOR	ERJ2GEJ 151 X (150 Ω)
R153	7030005040	S.RESISTOR	ERJ2GEJ 472 X (4.7 kΩ)
R155	7030000240	S.RESISTOR	MCR10EZHJ 68 Ω (680)
R156	7030000240	S.RESISTOR	MCR10EZHJ 68 Ω (680)
R157	7030000240	S.RESISTOR	MCR10EZHJ 68 Ω (680)
R158	7030005050	S.RESISTOR	ERJ2GEJ 103 X (10 kΩ)
R159	7030005120	S.RESISTOR	ERJ2GEJ 102 X (1 kΩ)
R160	7030005320	S.RESISTOR	RR0816P-103-D (10 kΩ)
R161	7030005330	S.RESISTOR	RR0816P-562-D (5.6 kΩ)
R162	7030005090	S.RESISTOR	ERJ2GEJ 104 X (100 kΩ)
R201	7030005060	S.RESISTOR	ERJ2GEJ 333 X (33 kΩ)
R202	7030007270	S.RESISTOR	ERJ2GEJ 151 X (150 Ω)
R203	7030004990	S.RESISTOR	ERJ2GEJ 221 X (220 Ω)
R204	7030007610	S.RESISTOR	RR0510R-683-D (68 kΩ)
R205	7030007280	S.RESISTOR	ERJ2GEJ 331 X (330 Ω)
R206	7030007300	S.RESISTOR	ERJ2GEJ 332 X (3.3 kΩ)
R207	7030005040	S.RESISTOR	ERJ2GEJ 472 X (4.7 kΩ)
R300	7510000980	S.THERMISTOR	TBPS1R333K460H5Q
R301	7030006010	S.RESISTOR	RR0510P-472-D (4.7 kΩ)
R302	7310003590	S.TRIMMER	EVM-1XSX50 B24 (203)
R303	7030007610	S.RESISTOR	RR0510R-683-D (68 kΩ)
R304	7310003590	S.TRIMMER	EVM-1XSX50 B24 (203)
R305	7030005840	S.RESISTOR	RR0510R-473-D (47 kΩ)
R306	7030005170	S.RESISTOR	ERJ2GEJ 474 X (470 kΩ)
R308	7310003630	S.TRIMMER	EVM-1XSX50 BQ4 (473)
R309	7030005530	S.RESISTOR	ERJ2GEJ 100 X (10 Ω)
R310	7030005050	S.RESISTOR	ERJ2GEJ 103 X (10 kΩ)
R314	7310003630	S.TRIMMER	EVM-1XSX50 BQ4 (473)
R315	7030005050	S.RESISTOR	ERJ2GEJ 103 X (10 kΩ)

S.=Surface mount

[2F UNIT]

REF. NO.	ORDER NO.	DESCRIPTION	
R401	7030005040	S.RESISTOR	ERJ2GEJ 472 X (4.7 kΩ)
R402	7030005090	S.RESISTOR	ERJ2GEJ 104 X (100 kΩ)
R409	7030005040	S.RESISTOR	ERJ2GEJ 472 X (4.7 kΩ)
R410	7030005120	S.RESISTOR	ERJ2GEJ 102 X (1 kΩ)
R411	7030005010	S.RESISTOR	ERJ2GEJ 681 X (680 Ω)
R414	7030005000	S.RESISTOR	ERJ2GEJ 471 X (470 Ω)
R415	7030005310	S.RESISTOR	ERJ2GEJ 124 X (120 kΩ)
R416	7030005040	S.RESISTOR	ERJ2GEJ 472 X (4.7 kΩ)
R502	7030005530	S.RESISTOR	ERJ2GEJ 100 X (10 Ω)
R504	7310003590	S.TRIMMER	EVM-1XSX50 B24 (203)
R505	7030007340	S.RESISTOR	ERJ2GEJ 153 X (15 kΩ)
R506	7510001040	S.THERMISTOR	TBPS1R153K460H5Q
R601	7030005040	S.RESISTOR	ERJ2GEJ 472 X (4.7 kΩ)
R602	7030007300	S.RESISTOR	ERJ2GEJ 332 X (3.3 kΩ)
R603	7030005220	S.RESISTOR	ERJ2GEJ 223 X (22 kΩ)
R604	7030007280	S.RESISTOR	ERJ2GEJ 331 X (330 Ω)
R605	7030004980	S.RESISTOR	ERJ2GEJ 101 X (100 Ω)
R606	7030007290	S.RESISTOR	ERJ2GEJ 222 X (2.2 kΩ)
R607	7030005090	S.RESISTOR	ERJ2GEJ 104 X (100 kΩ)
R608	7030005040	S.RESISTOR	ERJ2GEJ 472 X (4.7 kΩ)
R609	7030005090	S.RESISTOR	ERJ2GEJ 104 X (100 kΩ)
R610	7030007290	S.RESISTOR	ERJ2GEJ 222 X (2.2 kΩ)
R612	7030005040	S.RESISTOR	ERJ2GEJ 472 X (4.7 kΩ)
R903	7030000180	S.RESISTOR	MCR10EZHJ 22 Ω (220)
R904	7030000180	S.RESISTOR	MCR10EZHJ 22 Ω (220)
R905	7030005090	S.RESISTOR	ERJ2GEJ 104 X (100 kΩ)
R906	7030005050	S.RESISTOR	ERJ2GEJ 103 X (10 kΩ)
C11	4550002890	S.TANTALUM	TESVA 1A 225M1-8L
C12	4030009810	S.CERAMIC	C1005 JB 1E 102K-T-A
C54	4030009740	S.CERAMIC	C1005 CH 1E 100D-T-A
C55	4030009810	S.CERAMIC	C1005 JB 1E 102K-T-A
C56	4030009810	S.CERAMIC	C1005 JB 1E 102K-T-A
C57	4030009760	S.CERAMIC	C1005 CH 1E 150J-T-A
C58	4030009810	S.CERAMIC	C1005 JB 1E 102K-T-A
C59	4030009810	S.CERAMIC	C1005 JB 1E 102K-T-A
C60	4030009810	S.CERAMIC	C1005 JB 1E 102K-T-A
C61	4030009810	S.CERAMIC	C1005 JB 1E 102K-T-A
C62	4030006860	S.CERAMIC	C1608 JB 1H 102K-T-A
C63	4030009830	S.CERAMIC	C1005 CH 1E 180J-T-A
C64	4030011640	S.CERAMIC	C1005 CH 1E 010B-T-A
C65	4030011640	S.CERAMIC	C1005 CH 1E 010B-T-A
C66	4030006860	S.CERAMIC	C1608 JB 1H 102K-T-A
C67	4030009730	S.CERAMIC	C1005 CH 1E 090D-T-A
C68	4030009810	S.CERAMIC	C1005 JB 1E 102K-T-A
C69	4030009730	S.CERAMIC	C1005 CH 1E 090D-T-A
C70	4030009810	S.CERAMIC	C1005 JB 1E 102K-T-A
C71	4030009730	S.CERAMIC	C1005 CH 1E 090D-T-A
C72	4030009840	S.CERAMIC	C1005 CH 1E 060D-T-A
C101	4030009810	S.CERAMIC	C1005 JB 1E 102K-T-A
C102	4030009810	S.CERAMIC	C1005 JB 1E 102K-T-A
C103	4030009810	S.CERAMIC	C1005 JB 1E 102K-T-A
C106	4030010740	S.CERAMIC	C1608 JB 1A 104K-T-A
C107	4030009740	S.CERAMIC	C1005 CH 1E 100D-T-A
C109	4030006860	S.CERAMIC	C1608 JB 1H 102K-T-A
C110	4030010740	S.CERAMIC	C1608 JB 1A 104K-T-A
C111	4030009800	S.CERAMIC	C1005 JB 1E 471K-T-A
C112	4030009800	S.CERAMIC	C1005 JB 1E 471K-T-A
C113	4030009810	S.CERAMIC	C1005 JB 1E 102K-T-A
C114	4030009820	S.CERAMIC	C1005 JB 1C 103K-T-A
C115	4030009810	S.CERAMIC	C1005 JB 1E 102K-T-A
C116	4030009810	S.CERAMIC	C1005 JB 1E 102K-T-A
C117	4030008920	S.CERAMIC	C1608 JB 1C 473K-T-A
C118	4030009770	S.CERAMIC	C1005 CH 1E 220J-T-A
C119	4030010740	S.CERAMIC	C1608 JB 1A 104K-T-A
C120	4030009820	S.CERAMIC	C1005 JB 1C 103K-T-A
C121	4030009820	S.CERAMIC	C1005 JB 1C 103K-T-A
C122	4030008920	S.CERAMIC	C1608 JB 1C 473K-T-A
C123	4030009000	S.CERAMIC	C2012 JB 1C 224K-T-A
C124	4550003290	S.TANTALUM	TESVA 0G 475M1-8L
C125	4030009810	S.CERAMIC	C1005 JB 1E 102K-T-A
C126	4030010740	S.CERAMIC	C1608 JB 1A 104K-T-A
C151	4510005370	S.ELECTROLITIC	ECEV1AA221P
C152	4030008920	S.CERAMIC	C1608 JB 1C 473K-T-A
C153	4550003080	S.TANTALUM	TEMSVA 1A 335M-8L

[2F UNIT]

REF. NO.	ORDER NO.	DESCRIPTION	
C154	4030011320	S.CERAMIC	C1005 CH 1E 470J-T-A
C155	4030009810	S.CERAMIC	C1005 JB 1E 102K-T-A
C156	4510004640	S.ELECTROLITIC	ECEV1CA470SP
C157	4550003290	S.TANTALUM	TESVA 0G 475M1-8L
C158	4030009810	S.CERAMIC	C1005 JB 1E 102K-T-A
C159	4030006860	S.CERAMIC	C1608 JB 1H 102K-T-A
C160	4510005320	S.ELECTROLITIC	ECEV0JA101SP
C161	4030009810	S.CERAMIC	C1005 JB 1E 102K-T-A
C162	4030009810	S.CERAMIC	C1005 JB 1E 102K-T-A
C201	4030009810	S.CERAMIC	C1005 JB 1E 102K-T-A
C202	4030011300	S.CERAMIC	C1005 CH 1E 121J-T-A
C203	4030009740	S.CERAMIC	C1005 CH 1E 100D-T-A
C204	4030009810	S.CERAMIC	C1005 JB 1E 102K-T-A
C205	4030009810	S.CERAMIC	C1005 JB 1E 102K-T-A
C206	4030009810	S.CERAMIC	C1005 JB 1E 102K-T-A
C207	4030009790	S.CERAMIC	C1005 CH 1E 330J-T-A
C300	4030009810	S.CERAMIC	C1005 JB 1E 102K-T-A
C301	4030009810	S.CERAMIC	C1005 JB 1E 102K-T-A
C302	4030009810	S.CERAMIC	C1005 JB 1E 102K-T-A
C303	4030009810	S.CERAMIC	C1005 JB 1E 102K-T-A
C400	4030009810	S.CERAMIC	C1005 JB 1E 102K-T-A
C401	4030011660	S.CERAMIC	C1005 CH 1E 020B-T-A
C403	4030009810	S.CERAMIC	C1005 JB 1E 102K-T-A
C409	4030009810	S.CERAMIC	C1005 JB 1E 102K-T-A
C410	4030006860	S.CERAMIC	C1608 JB 1H 102K-T-A
C411	4030009700	S.CERAMIC	C1005 CH 1E 050C-T-A
C412	4030011670	S.CERAMIC	C1005 CH 1E 2R5B-T-A
C413	4030006900	S.CERAMIC	C1608 JB 1E 103K-T-A
C414	4030009810	S.CERAMIC	C1005 JB 1E 102K-T-A
C415	4030009810	S.CERAMIC	C1005 JB 1E 102K-T-A
C416	4030009810	S.CERAMIC	C1005 JB 1E 102K-T-A
C501	4030011320	S.CERAMIC	C1005 CH 1E 470J-T-A
C601	4030006860	S.CERAMIC	C1608 JB 1H 102K-T-A
C604	4030006860	S.CERAMIC	C1608 JB 1H 102K-T-A
C605	4030009810	S.CERAMIC	C1005 JB 1E 102K-T-A
C606	4030006860	S.CERAMIC	C1608 JB 1H 102K-T-A
C607	4030011660	S.CERAMIC	C1005 CH 1E 020B-T-A
C608	4030011660	S.CERAMIC	C1005 CH 1E 020B-T-A
C609	4030011660	S.CERAMIC	C1005 CH 1E 020B-T-A
C610	4030009720	S.CERAMIC	C1005 CH 1E 080D-T-A
C611	4030011650	S.CERAMIC	C1005 CH 1E 1R5B-T-A
C612	4030009700	S.CERAMIC	C1005 CH 1E 050C-T-A
C613	4030009810	S.CERAMIC	C1005 JB 1E 102K-T-A
C614	4030009810	S.CERAMIC	C1005 JB 1E 102K-T-A
C615	4030009810	S.CERAMIC	C1005 JB 1E 102K-T-A
C616	4030009810	S.CERAMIC	C1005 JB 1E 102K-T-A
C617	4030009710	S.CERAMIC	C1005 JB 1E 070B-T-A
C618	4030009810	S.CERAMIC	C1005 JB 1E 102K-T-A
C619	4030009810	S.CERAMIC	C1005 JB 1E 102K-T-A
C620	4030009810	S.CERAMIC	C1005 JB 1E 102K-T-A
C621	4030009810	S.CERAMIC	C1005 JB 1E 102K-T-A
C622	4030009810	S.CERAMIC	C1005 JB 1E 102K-T-A
C800	4030009810	S.CERAMIC	C1005 JB 1E 102K-T-A
C801	4030009810	S.CERAMIC	C1005 JB 1E 102K-T-A
C802	4030009810	S.CERAMIC	C1005 JB 1E 102K-T-A
C803	4030009810	S.CERAMIC	C1005 JB 1E 102K-T-A
C900	4030009810	S.CERAMIC	C1005 JB 1E 102K-T-A
C901	4030009810	S.CERAMIC	C1005 JB 1E 102K-T-A
C902	4030009810	S.CERAMIC	C1005 JB 1E 102K-T-A
C911	4030009810	S.CERAMIC	C1005 JB 1E 102K-T-A
C912	4030006860	S.CERAMIC	C1608 JB 1H 102K-T-A
C913	4030006860	S.CERAMIC	C1608 JB 1H 102K-T-A
C914	4030009810	S.CERAMIC	C1005 JB 1E 102K-T-A
C915	4030009810	S.CERAMIC	C1005 JB 1E 102K-T-A
C916	4030009810	S.CERAMIC	C1005 JB 1E 102K-T-A
C917	4030009810	S.CERAMIC	C1005 JB 1E 102K-T-A
C918	4030009810	S.CERAMIC	C1005 JB 1E 102K-T-A
C919	4030009810	S.CERAMIC	C1005 JB 1E 102K-T-A
C920	4030009810	S.CERAMIC	C1005 JB 1E 102K-T-A
C921	4030009810	S.CERAMIC	C1005 JB 1E 102K-T-A
C922	4030009810	S.CERAMIC	C1005 JB 1E 102K-T-A
C923	4030009810	S.CERAMIC	C1005 JB 1E 102K-T-A
J1	6510018480	S.CONNECTOR	IL-WX-30SB-VF-B-E1000
J2	6510018630	S.CONNECTOR	08-6210-030-010-800

S.=Surface mount

[2F UNIT]

REF. NO.	ORDER NO.	DESCRIPTION	
J3	6510018180	S.CONNECTOR	52365-0690
EP1	0910047200	PCB	B 4798

[LOGIC UNIT]

REF. NO.	ORDER NO.	DESCRIPTION	
IC1	1140005840	S.IC	M38267M8L-155GP
IC2	1180001240	S.IC	S-81335HG-KI-T1
IC3	1110003380	S.IC	S-80730SL-AT-T1
IC12	1110004110	S.IC	BA4510F-T1
IC13	1110002700	S.IC	NJM2904M-T1
IC15	1140005620	S.IC	X25080SI-2.7T
Q1	1590001140	S.TRANSISTOR	UN9210(TX)
Q4	1590001170	S.TRANSISTOR	XP1501-(TX).AB
Q5	1520000460	S.TRANSISTOR	2SB1132 T100 R
Q10	1550000010	S.FET	2SJ364-Q (TX)
Q12	1590001190	S.TRANSISTOR	XP6501-(TX).AB
Q30	1590001690	S.TRANSISTOR	UN9115(TX)
Q31	1590001150	S.TRANSISTOR	UN9211(TX)
Q32	1520000430	S.TRANSISTOR	2SB1462-R(TX)
Q34	1590001860	S.TRANSISTOR	UN9215(TX)
Q35	1590001860	S.TRANSISTOR	UN9215(TX)
Q36	1590001860	S.TRANSISTOR	UN9215(TX)
Q40	1590001470	S.TRANSISTOR	UN9213(TX)
Q42	1590001150	S.TRANSISTOR	UN9211(TX)
Q44	1590001860	S.TRANSISTOR	UN9215(TX)
Q45	1590001690	S.TRANSISTOR	UN9115(TX)
D1	1790001250	S.DIODE	MA2S111-(TX)
D3	1790001250	S.DIODE	MA2S111-(TX)
D4	1790000990	S.ZENER	MA8051-H(TX)
D6	1790001250	S.DIODE	MA2S111-(TX)
D7	1790001250	S.DIODE	MA2S111-(TX)
D8	1790001200	S.DIODE	MA6S121(TX)
D11	1750000220	S.DIODE	DA113W T107 [UK], [AUS], [THA]
	1160000050	S.DIODE	DAP202U T107 [ITA], [SEA]
	1750000240	S.DIODE	DA112 T107 [USA], [EUR], [KOR]
D12	1750000220	S.DIODE	DA113W T107 [ITA], [KOR], [THA], [TPE]
	1750000240	S.DIODE	DA112 T107 [USA], [AUS], [SEA]
D13	1790001250	S.DIODE	MA2S111-(TX) [KOR]
	1790001250	S.DIODE	MA2S111-(TX) [TPE]
D14	1790001250	S.DIODE	MA2S111-(TX) Except [ITA], [THA] versions
D15	1160000050	S.DIODE	DAP202U T107 Except [ITA], [THA] versions
D16	1790001250	S.DIODE	MA2S111-(TX) [USA]
D19	1790001250	S.DIODE	MA2S111-(TX)
X1	6050009620	S.XTAL	CR-534 (5.039 MHz)
R2	7030003580	S.RESISTOR	ERJ3GEYJ 153 V (15 kΩ)
R10	7030003560	S.RESISTOR	ERJ3GEYJ 103 V (10 kΩ)
R11	7030003560	S.RESISTOR	ERJ3GEYJ 103 V (10 kΩ)
R12	7030003560	S.RESISTOR	ERJ3GEYJ 103 V (10 kΩ)
R38	7030003800	S.RESISTOR	ERJ3GEYJ 105 V (1 MΩ)
R41	7030003520	S.RESISTOR	ERJ3GEYJ 472 V (4.7 kΩ)
R42	7030003630	S.RESISTOR	ERJ3GEYJ 393 V (39 kΩ)
R43	7030003630	S.RESISTOR	ERJ3GEYJ 393 V (39 kΩ)
R44	7030003550	S.RESISTOR	ERJ3GEYJ 822 V (8.2 kΩ)

[LOGIC UNIT]

REF. NO.	ORDER NO.	DESCRIPTION	
R45	7030003480	S.RESISTOR	ERJ3GEYJ 222 V (2.2 kΩ)
R46	7030003580	S.RESISTOR	ERJ3GEYJ 153 V (15 kΩ)
R47	7030003700	S.RESISTOR	ERJ3GEYJ 154 V (150 kΩ)
R48	7030003750	S.RESISTOR	ERJ3GEYJ 394 V (390 kΩ)
R140	7030003620	S.RESISTOR	ERJ3GEYJ 333 V (33 kΩ)
R141	7030003440	S.RESISTOR	ERJ3GEYJ 102 V (1 kΩ)
R142	7030003440	S.RESISTOR	ERJ3GEYJ 102 V (1 kΩ)
R143	7030003440	S.RESISTOR	ERJ3GEYJ 102 V (1 kΩ)
R144	7030003560	S.RESISTOR	ERJ3GEYJ 103 V (10 kΩ)
R145	7030003720	S.RESISTOR	ERJ3GEYJ 224 V (220 kΩ)
R146	7030003400	S.RESISTOR	ERJ3GEYJ 471 V (470 Ω)
R147	7310002600	S.TRIMMER	RV-110 (RH03A3AS4X0AA)473
R148	7030003540	S.RESISTOR	ERJ3GEYJ 682 V (6.8 kΩ)
R149	7030003320	S.RESISTOR	ERJ3GEYJ 101 V (100 Ω)
R151	7030003590	S.RESISTOR	ERJ3GEYJ 183 V (18 kΩ)
R152	7030003650	S.RESISTOR	ERJ3GEYJ 563 V (56 kΩ)
R153	7030003650	S.RESISTOR	ERJ3GEYJ 563 V (56 kΩ)
R154	7030003710	S.RESISTOR	ERJ3GEYJ 184 V (180 kΩ)
R155	7030003640	S.RESISTOR	ERJ3GEYJ 473 V (47 kΩ)
R156	7030003520	S.RESISTOR	ERJ3GEYJ 472 V (4.7 kΩ)
R157	7030003680	S.RESISTOR	ERJ3GEYJ 104 V (100 kΩ)
R158	7030003520	S.RESISTOR	ERJ3GEYJ 472 V (4.7 kΩ)
R159	7030003610	S.RESISTOR	ERJ3GEYJ 273 V (27 kΩ)
R160	7030003700	S.RESISTOR	ERJ3GEYJ 154 V (150 kΩ)
R161	7030003200	S.RESISTOR	ERJ3GEYJ 100 V (10 Ω)
R162	7030003320	S.RESISTOR	ERJ3GEYJ 101 V (100 Ω)
R181	7030003760	S.RESISTOR	ERJ3GEYJ 474 V (470 kΩ)
R183	7030003320	S.RESISTOR	ERJ3GEYJ 101 V (100 Ω)
R184	7030003320	S.RESISTOR	ERJ3GEYJ 101 V (100 Ω)
R185	7030003320	S.RESISTOR	ERJ3GEYJ 101 V (100 Ω)
R186	7030003760	S.RESISTOR	ERJ3GEYJ 474 V (470 kΩ)
R187	7030003800	S.RESISTOR	ERJ3GEYJ 105 V (1 MΩ)
R190	7030003520	S.RESISTOR	ERJ3GEYJ 472 V (4.7 kΩ)
R196	7030003680	S.RESISTOR	ERJ3GEYJ 104 V (100 kΩ)
R197	7030005840	S.RESISTOR	RR0510R-473-D (47 kΩ)
R198	7030005840	S.RESISTOR	RR0510R-473-D (47 kΩ)
R200	7030003760	S.RESISTOR	ERJ3GEYJ 474 V (470 kΩ)
R205	7030003680	S.RESISTOR	ERJ3GEYJ 104 V (100 kΩ)
R207	7030003720	S.RESISTOR	ERJ3GEYJ 224 V (220 kΩ)
R208	7030003320	S.RESISTOR	ERJ3GEYJ 101 V (100 Ω)
R209	7030005840	S.RESISTOR	RR0510R-473-D (47 kΩ)
R210	7030003560	S.RESISTOR	ERJ3GEYJ 103 V (10 kΩ)
R211	7030003760	S.RESISTOR	ERJ3GEYJ 474 V (470 kΩ)
R213	7030003670	S.RESISTOR	ERJ3GEYJ 823 V (82 kΩ)
R214	7030003670	S.RESISTOR	ERJ3GEYJ 823 V (82 kΩ)
R215	7030003670	S.RESISTOR	ERJ3GEYJ 823 V (82 kΩ)
R216	7030003800	S.RESISTOR	ERJ3GEYJ 105 V (1 MΩ)
R218	7030003680	S.RESISTOR	ERJ3GEYJ 104 V (100 kΩ)
R219	7030003840	S.RESISTOR	ERJ3GEYJ 225 V (2.2 MΩ)
R220	7030003560	S.RESISTOR	ERJ3GEYJ 103 V (10 kΩ)
R221	7030005520	S.RESISTOR	RR0816R-334-D (330 kΩ)
R222	7030005970	S.RESISTOR	RR0816R-683-D (68 kΩ)
R223	7030003520	S.RESISTOR	ERJ3GEYJ 472 V (4.7 kΩ)
R224	7030003800	S.RESISTOR	ERJ3GEYJ 105 V (1 MΩ)
R230	7030003680	S.RESISTOR	ERJ3GEYJ 104 V (100 kΩ)
R231	7410000710	S.ARRAY	EXB-V8V 224JV (220 kΩ)
R233	7030003800	S.RESISTOR	ERJ3GEYJ 105 V (1 MΩ)
R234	7030003800	S.RESISTOR	ERJ3GEYJ 105 V (1 MΩ)
R235	7030005110	S.RESISTOR	ERJ2GEJ 224 X (220 kΩ)
R236	7030005110	S.RESISTOR	ERJ2GEJ 224 X (220 kΩ)
R237	7030005110	S.RESISTOR	ERJ2GEJ 224 X (220 kΩ)
R238	7030005110	S.RESISTOR	ERJ2GEJ 224 X (220 kΩ)
R240	7030003690	S.RESISTOR	ERJ3GEYJ 124 V (120 kΩ)
R241	7030003680	S.RESISTOR	ERJ3GEYJ 104 V (100 kΩ)
R242	7030003760	S.RESISTOR	ERJ3GEYJ 474 V (470 kΩ)
R302	7030003560	S.RESISTOR	ERJ3GEYJ 103 V (10 kΩ) [EUR]
R303	7030003560	S.RESISTOR	ERJ3GEYJ 103 V (10 kΩ) [UK]
R304	7030003560	S.RESISTOR	ERJ3GEYJ 103 V (10 kΩ) [ITA]
R305	7030003560	S.RESISTOR	ERJ3GEYJ 103 V (10 kΩ) [USA]
R307	7030003560	S.RESISTOR	ERJ3GEYJ 103 V (10 kΩ) [AUS]

S.=Surface mount

[LOGIC UNIT]

REF. NO.	ORDER NO.	DESCRIPTION	
R309	7030003560	S.RESISTOR	ERJ3GEYJ 103 V (10 kΩ) [SEA]
R315	7030003560	S.RESISTOR	ERJ3GEYJ 103 V (10 kΩ) [KOR]
R317	7030003560	S.RESISTOR	ERJ3GEYJ 103 V (10 kΩ) [THA]
R319	7030003560	S.RESISTOR	ERJ3GEYJ 103 V (10 kΩ) [TPE]
C5	4030009810	S.CERAMIC	C1005 JB 1E 102K-T-A
C6	4030010740	S.CERAMIC	C1608 JB 1A 104K-T-A
C15	4030006860	S.CERAMIC	C1608 JB 1H 102K-T-A
C16	4550006080	S.TANTALUM	TEMSVB2 1C 106M-8L
C17	4510005900	S.ELECTROLITIC	ECEV0GA101SR
C18	4030006860	S.CERAMIC	C1608 JB 1H 102K-T-A
C19	4030006900	S.CERAMIC	C1608 JB 1E 103K-T-A
C20	4550006120	S.TANTALUM	TEMSVA 0G 226M-8L
C21	4030010740	S.CERAMIC	C1608 JB 1A 104K-T-A
C22	4030006860	S.CERAMIC	C1608 JB 1H 102K-T-A
C23	4550006780	S.TANTALUM	TEMSVB2 0J 476M-8R
C36	4030008920	S.CERAMIC	C1608 JB 1C 473K-T-A
C40	4030006860	S.CERAMIC	C1608 JB 1H 102K-T-A
C41	4030006870	S.CERAMIC	C1608 JB 1H 222K-T-A
C42	4030006860	S.CERAMIC	C1608 JB 1H 102K-T-A
C43	4030010740	S.CERAMIC	C1608 JB 1A 104K-T-A
C44	4030006900	S.CERAMIC	C1608 JB 1E 103K-T-A
C45	4030006900	S.CERAMIC	C1608 JB 1E 103K-T-A
C80	4030009810	S.CERAMIC	C1005 JB 1E 102K-T-A
C81	4030009810	S.CERAMIC	C1005 JB 1E 102K-T-A
C82	4030009810	S.CERAMIC	C1005 JB 1E 102K-T-A
C83	4030009810	S.CERAMIC	C1005 JB 1E 102K-T-A
C84	4030009810	S.CERAMIC	C1005 JB 1E 102K-T-A
C87	4030009810	S.CERAMIC	C1005 JB 1E 102K-T-A
C91	4030009810	S.CERAMIC	C1005 JB 1E 102K-T-A
C92	4030009810	S.CERAMIC	C1005 JB 1E 102K-T-A
C93	4030009810	S.CERAMIC	C1005 JB 1E 102K-T-A
C130	4030009800	S.CERAMIC	C1005 JB 1E 471K-T-A
C131	4030006900	S.CERAMIC	C1608 JB 1E 103K-T-A
C132	4030008920	S.CERAMIC	C1608 JB 1C 473K-T-A
C133	4550003290	S.TANTALUM	TESVA 0G 475M1-8L
C136	4030009000	S.CERAMIC	C2012 JB 1C 224K-T-A
C137	4030006850	S.CERAMIC	C1608 JB 1H 471K-T-A
C138	4030006860	S.CERAMIC	C1608 JB 1H 102K-T-A
C139	4030006880	S.CERAMIC	C1608 JB 1H 472K-T-A
C140	4030006850	S.CERAMIC	C1608 JB 1H 471K-T-A
C141	4550003290	S.TANTALUM	TESVA 0G 475M1-8L
C142	4030006860	S.CERAMIC	C1608 JB 1H 102K-T-A
C143	4030007140	S.CERAMIC	C1608 CH 1H 121J-T-A
C145	4030006880	S.CERAMIC	C1608 JB 1H 472K-T-A
C146	4030006870	S.CERAMIC	C1608 JB 1H 222K-T-A
C147	4030010040	S.CERAMIC	C1608 JB 1H 561K-T-A
C148	4030006860	S.CERAMIC	C1608 JB 1H 102K-T-A
C149	4550006780	S.TANTALUM	TEMSVB2 0J 476M-8R
C154	4030008920	S.CERAMIC	C1608 JB 1C 473K-T-A
C155	4030009650	S.CERAMIC	C1608 CH 1H 240J-T-A
C156	4030007060	S.CERAMIC	C1608 CH 1H 270J-T-A
C157	4030010740	S.CERAMIC	C1608 JB 1A 104K-T-A
C166	4030006860	S.CERAMIC	C1608 JB 1H 102K-T-A
C167	4030006860	S.CERAMIC	C1608 JB 1H 102K-T-A
C168	4030006860	S.CERAMIC	C1608 JB 1H 102K-T-A
C169	4030009980	S.CERAMIC	C1608 JB 1H 152K-T-A
C170	4030010740	S.CERAMIC	C1608 JB 1A 104K-T-A
C171	4030008910	S.CERAMIC	C1608 JB 1C 393K-T-A
C172	4030010740	S.CERAMIC	C1608 JB 1A 104K-T-A
C173	4030006870	S.CERAMIC	C1608 JB 1H 222K-T-A
C174	4030009820	S.CERAMIC	C1005 JB 1C 103K-T-A
C175	4030010740	S.CERAMIC	C1608 JB 1A 104K-T-A
C176	4030009810	S.CERAMIC	C1005 JB 1E 102K-T-A
C178	4030010740	S.CERAMIC	C1608 JB 1A 104K-T-A
C179	4030007130	S.CERAMIC	C1608 CH 1H 101J-T-A
C180	4030010740	S.CERAMIC	C1608 JB 1A 104K-T-A
C181	4030006900	S.CERAMIC	C1608 JB 1E 103K-T-A
C200	4030009810	S.CERAMIC	C1005 JB 1E 102K-T-A
C201	4030009810	S.CERAMIC	C1005 JB 1E 102K-T-A
C202	4030009810	S.CERAMIC	C1005 JB 1E 102K-T-A

[LOGIC UNIT]

REF. NO.	ORDER NO.	DESCRIPTION	
C203	4030009810	S.CERAMIC	C1005 JB 1E 102K-T-A
C204	4030009810	S.CERAMIC	C1005 JB 1E 102K-T-A
C205	4030009810	S.CERAMIC	C1005 JB 1E 102K-T-A
C206	4030009810	S.CERAMIC	C1005 JB 1E 102K-T-A
C207	4030009810	S.CERAMIC	C1005 JB 1E 102K-T-A
C208	4030009810	S.CERAMIC	C1005 JB 1E 102K-T-A
C209	4030009810	S.CERAMIC	C1005 JB 1E 102K-T-A
C210	4030009810	S.CERAMIC	C1005 JB 1E 102K-T-A
C211	4030009810	S.CERAMIC	C1005 JB 1E 102K-T-A
C212	4030009810	S.CERAMIC	C1005 JB 1E 102K-T-A
C213	4030009810	S.CERAMIC	C1005 JB 1E 102K-T-A
C214	4030009810	S.CERAMIC	C1005 JB 1E 102K-T-A
C215	4030009810	S.CERAMIC	C1005 JB 1E 102K-T-A
C216	4030009810	S.CERAMIC	C1005 JB 1E 102K-T-A
C217	4030009810	S.CERAMIC	C1005 JB 1E 102K-T-A
DS1	5010000160	S.LED	LNJ310M6URA
DS2	5010000160	S.LED	LNJ310M6URA
DS3	5010000150	S.LED	LT1EP53A
DS4	5030001230	LCD	LD-BU4323J
S1	2220000560	S.SWITCH	SSSS812-B1
S2	2230000900	S.SWITCH	JPM1990-2013R
J1	6510018630	S.CONNECTOR	08-6210-030-010-800
W1	8900005320	FFC	OPC-519
W2	9045995030	WIRE	71/98/020/X98/X98
SP1	2510000840	SPEAKER	CS028014-12
MC1	7700001750	MICROPHONE	EM-123TH
EP1	0910047181	PCB	B 4790A
EP2	8930037201	LCD CONTACT	SRCN-1600

S.=Surface mount

SECTION 7 MECHANICAL PARTS

[CHASSIS PARTS]

REF. NO.	ORDER NO.	DESCRIPTION	QTY.
J1	6510018560	Antenna connector BNC-R128 (incl. nut)	1
MP1	8210013460	1600 rear panel (A)	1
MP2	8310034261	1460 contact base -1	1
MP3	8010016580	1810 chassis	1
MP4	8930035131	Spring (V) -1	1
MP6	8930033770	1460 release button	1
MP7	8930033820	1460 contact spring	3
MP8	8610010170	Knob N248 [DIAL]	1
MP9	8610010180	Knob N249 [VOL]	1
MP10	8930035410	1460 contact rubber	3
MP11	8930035520	1459 rear plate	1
MP12	8930036200	1600 DC cap	1
MP13	8810008750	Screw PH BT M2 x 15 ZK	4
MP14	8810008970	Screw FFH BT No.0 M2 x 3.5 NI-ZU	2
MP15	8810008970	Screw FFH BT No.0 M2 x 3.5 NI-ZU	3
MP16	8810008970	Screw FFH BT No.0 M2 x 3.5 NI-ZU	1
MP17	8810008970	Screw FFH BT No.0 M2 x 3.5 NI-ZU	2
MP18	8810008970	Screw FFH BT No.0 M2 x 3.5 NI-ZU	2
MP19	8810006790	Screw PH No.0 M2 x 3.5 ZK	1
MP20	8810008760	Screw PH BT M2 x 8 NI-ZU	2
MP21	8830000570	VR nut (A)	1
MP22	8930036340	1600 ANT lug	1
MP23	8810006650	Screw PH B0 No.0 M1.4 x 2.5	3
MP24	9910005730	Screw BuH M3 x 3 ZK BS	2
MP28	8860000980	1600 LOGIC lug	1
MP29	8930036190	1600 MIC cap	1
MP30	8930039830	Thermal sheet (D)	1

[1F UNIT]

REF. NO.	ORDER NO.	DESCRIPTION	QTY.
J901	6450000130	Connector HSJ1102-01-540 [MIC]	1
J902	6450001060	Connector HSJ1493-01-010 [SP]	1
J903	6450000870	Connector HEC2711-01-020 [DC13.5V]	1
S1	7600000190	Encoder/VR TP96D96E20-15F-10KA-1810 [DIAL/VOL]	1

[PA BOARD]

REF. NO.	ORDER NO.	DESCRIPTION	QTY.
MP401	8410002030	1810 PA heat sink	1

[DUAL VCO BOARD]

REF. NO.	ORDER NO.	DESCRIPTION	QTY.
MP301	8510010370	1810 VCO case	1

[2F UNIT]

REF. NO.	ORDER NO.	DESCRIPTION	QTY.
MP1	8860001000	1810 ground lug	1
MP2	8860001000	1810 ground lug	1
MP3	8930004081	Ground spring (B) -1	1

[LOGIC UNIT]

REF. NO.	ORDER NO.	DESCRIPTION	QTY.
W1	8900005320	Flat cable OPC-519	1
DS4	5030001230	LCD LD-BU4323J	1
EP2	8930037201	LCD contact SRCN-1600 ZNN-1	1
MC1	7700001750	Microphone EM-123TH	1
MP1	8210012470	1600 reflector	1
MP2	8930039160	1810 10-key	1
MP3	8930039130	1810 PTT button	1
MP5	8930036150	1600 LCD holder	1
MP9	8930039140	1810 PTT plate	3
MP10	8810008970	Screw FFH BT No.0 M2 x 3.5 NI-ZU	4
MP11	8510009790	1600 ground plate	1
MP12	8930036630	1600 SP sheet	1
MP13	8210013690	1810 front panel (A) (IC-T7E)	1
	8210013700	1810 front panel (B) (IC-T7A)	1
MP15	8930039120	1810 lock button	1
MP16	8860000980	1600 LOGIC lug	1
SP1	2510000840	Speaker CS028014-12	1

[UNPACKING]

REF. NO.	ORDER NO.	DESCRIPTION	QTY.
EP1	Optional product	ANTENNA FA-1443B (USA)	1
	Optional product	ANTENNA FA-B270C (others)	1
EP2	Optional product	BATTERY CASE BP-170 (SEA)	1
	Optional product	BATTERY PACK BP-171 (AUS)	1
	Optional product	BATTERY PACK BP-180 (EUR, UK, ITA, USA)	1
EP3	Optional product	CHARGER BC-110V (AUS)	1
	Optional product	CHARGER BC-110A (USA)	1
	Optional product	CHARGER BC-110D (EUR, ITA)	1
MP1	8010011960	Handstrap HK-005	1
MP3	8010008620	752 belt clip	1

Screw abbreviations

B0, BT: Self-tapping
PH: Pan head
FFH: Flat fillister head
BuH: Button head
NI-ZU: Nickel-Zinc
BS: Brass
ZK: Black

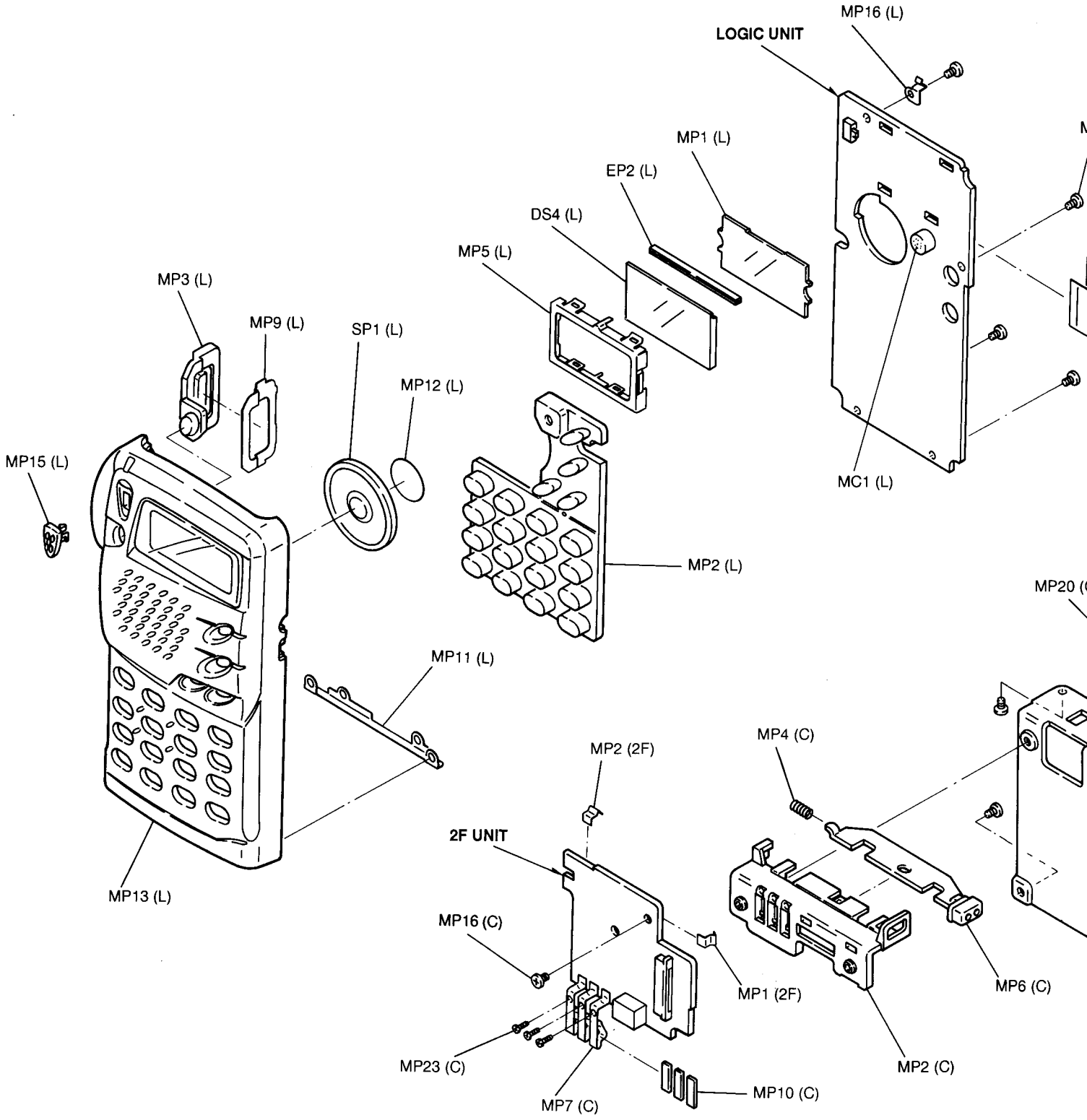
MP16 (L)
LOGIC UNIT
MP1 (L)
EP2 (L)
DS4 (L)
MP5 (L)
MP3 (L)
MP9 (L)
SP1 (L)
MP12 (L)
MP15 (L)
MC1 (L)
MP2 (L)
MP20 (
MP11 (L)
MP4 (C)
MP2 (2F)
2F UNIT
MP13 (L)
MP16 (C)
MP1 (2F)
MP6 (C)
MP23 (C)
MP2 (C)
MP7 (C)
MP10 (C)

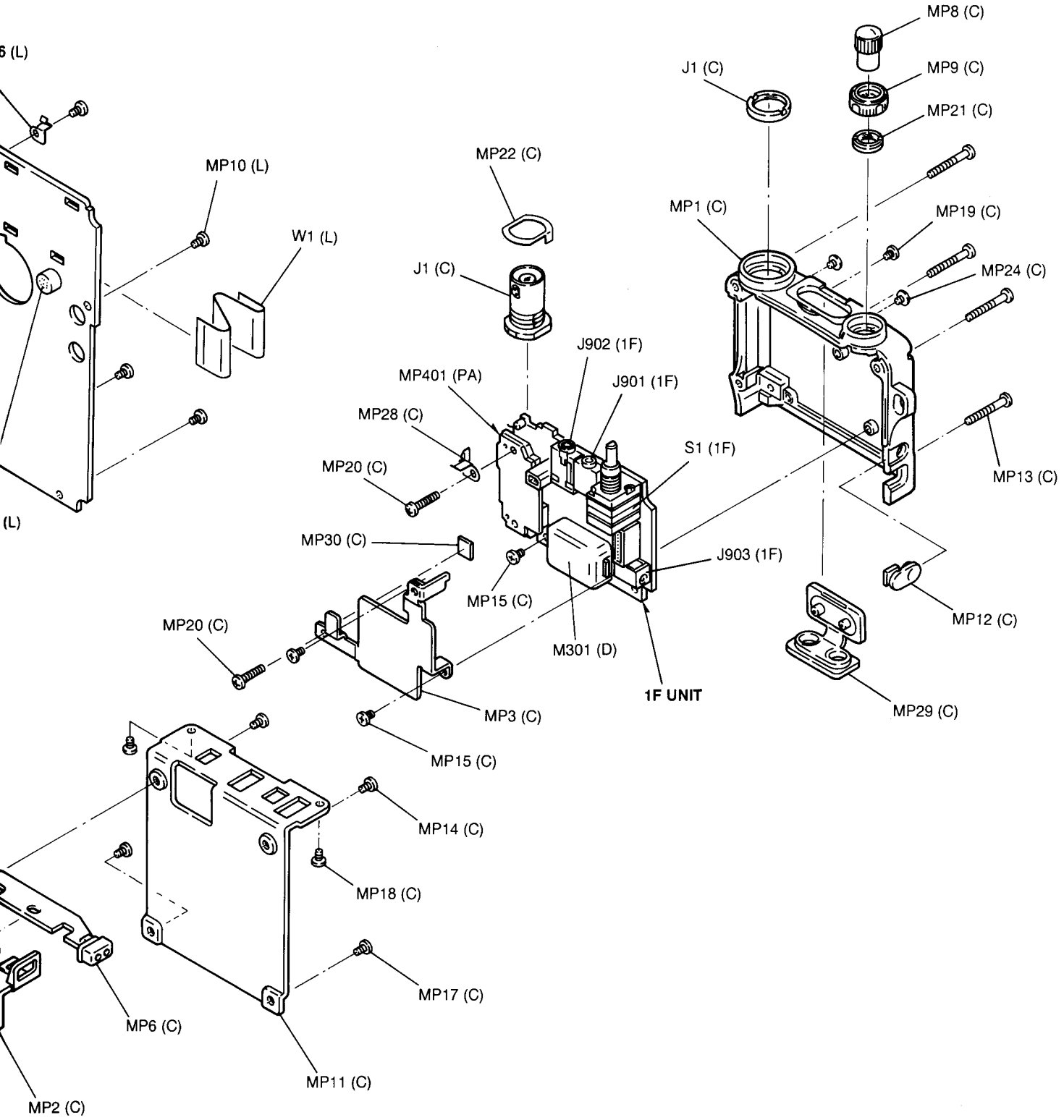

Unit abbreviations (C): CHASSIS PARTS (1F): 1F UNIT (PA): PA BOARD (2F): 2F UNIT
(D): DUAL VCO BOARD (L): LOGIC UNIT

SECTION 8 SEMI-CONDUCTOR INFORMATION

• TRANSISTORS AND FET'S

2SA1588 GR (Symbol: ZG)	**2SB1132 R** (Symbol: BARB)	**2SB1201 S** (Symbol: B1201) C B E	**2SB1462 R** (Symbol: BR)
2SC3356 (Symbol: R22)	**2SC4081 S** (Symbol: BS)	**2SC4215 O** (Symbol: QO)	**2SC4226** (Symbol: R25)
2SC4228 (Symbol: R45)	**2SC4403 3** (Symbol: LY3)	**2SC5006 T1** (Symbol: 24)	**2SC5107 O** (Symbol: MF)
2SC5108 Y (Symbol: MC)	**2SC5226 4** (Symbol: LN4)	**2SD2216** (Symbol: Y)	**2SJ364 Q** (Symbol: 4MQ) S G D
2SK880 Y (Symbol: XY) S G D	**DTC114TU** (Symbol: 04)	**HAT1004F EL** (Symbol: 5G2) S1 G1 S2 G2 D1 D1 D2 D2	**MRF5007** (Symbol: R56) D G S G S D (BOTTOM VIEW)
MRF9742 (Symbol: 9538) S D D S S G G S	**UN9115** (Symbol: 6E)	**UN9210** (Symbol: 8L)	**UN9211** (Symbol: 8A)

UN9213 (Symbol: 8C) 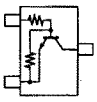	**UN9215** (Symbol: 8E) 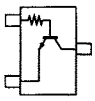	**XP1114** (Symbol: 7Q) 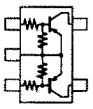	**XP1115** (Symbol: 9L) 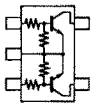
XP1213 (Symbol: 9L) 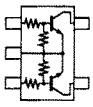	**XP1501** (Symbol: 5R) 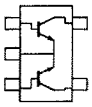	**XP6501** (Symbol: 5N) 	

• DIODES

DA112 (Symbol: AZ) 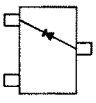	**DA113W** (Symbol: AY) 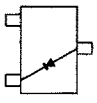	**DAP202U** (Symbol: P) 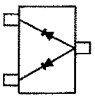	**MA132WA** (Symbol: MO) 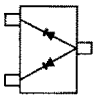
MA132WK (Symbol: MU) 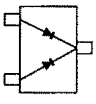	**MA133** (Symbol: MP) 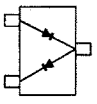	**MA6S121** (Symbol: M2D) 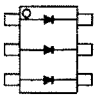	**SB07 03C TB** (Symbol: J) 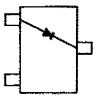

SECTION 9 BOARD LAYOUTS

9-1 LOGIC UNIT

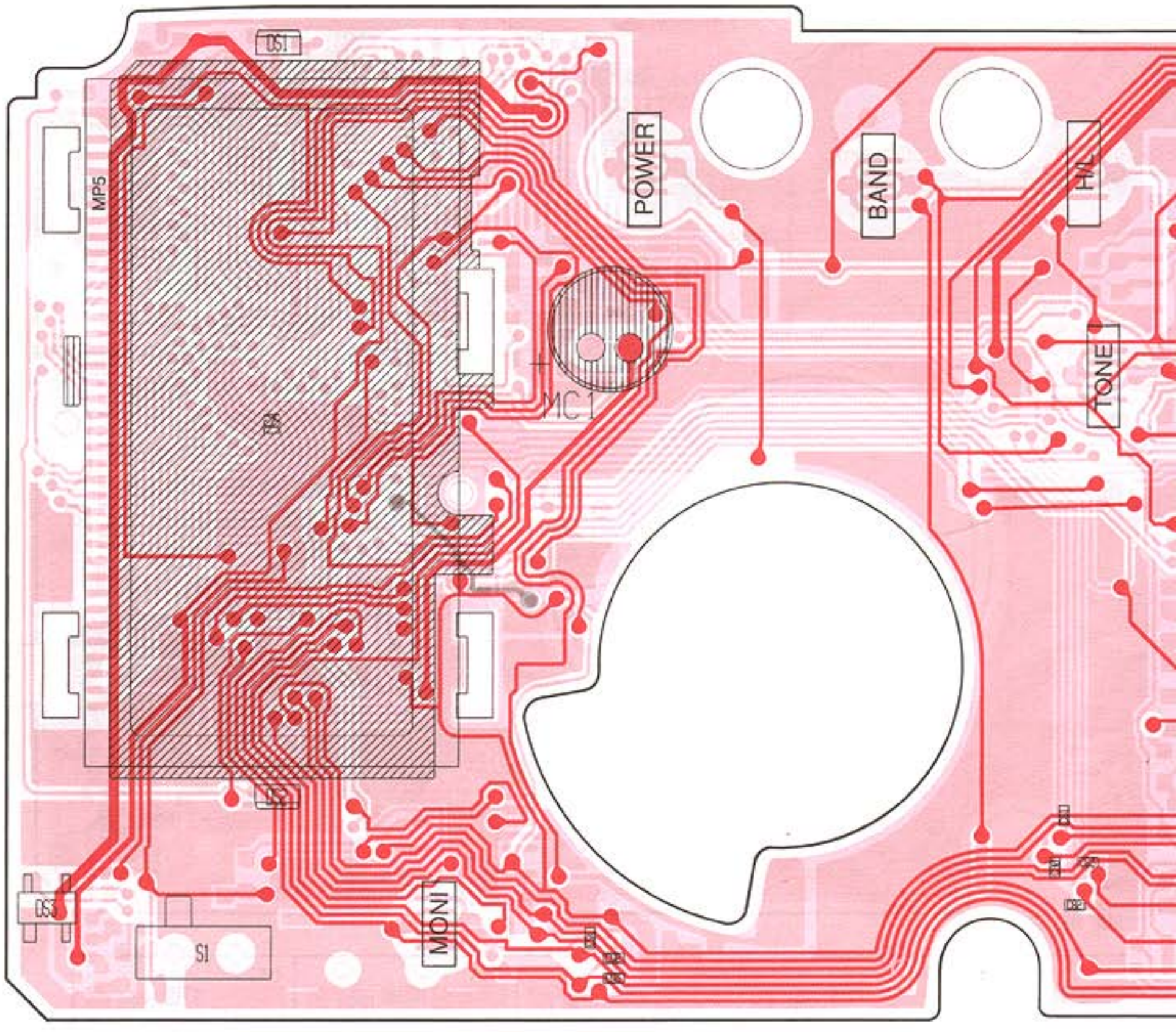

The combination of this page and the next page show the unit layout in the same configuration as the actual P. C. Board.

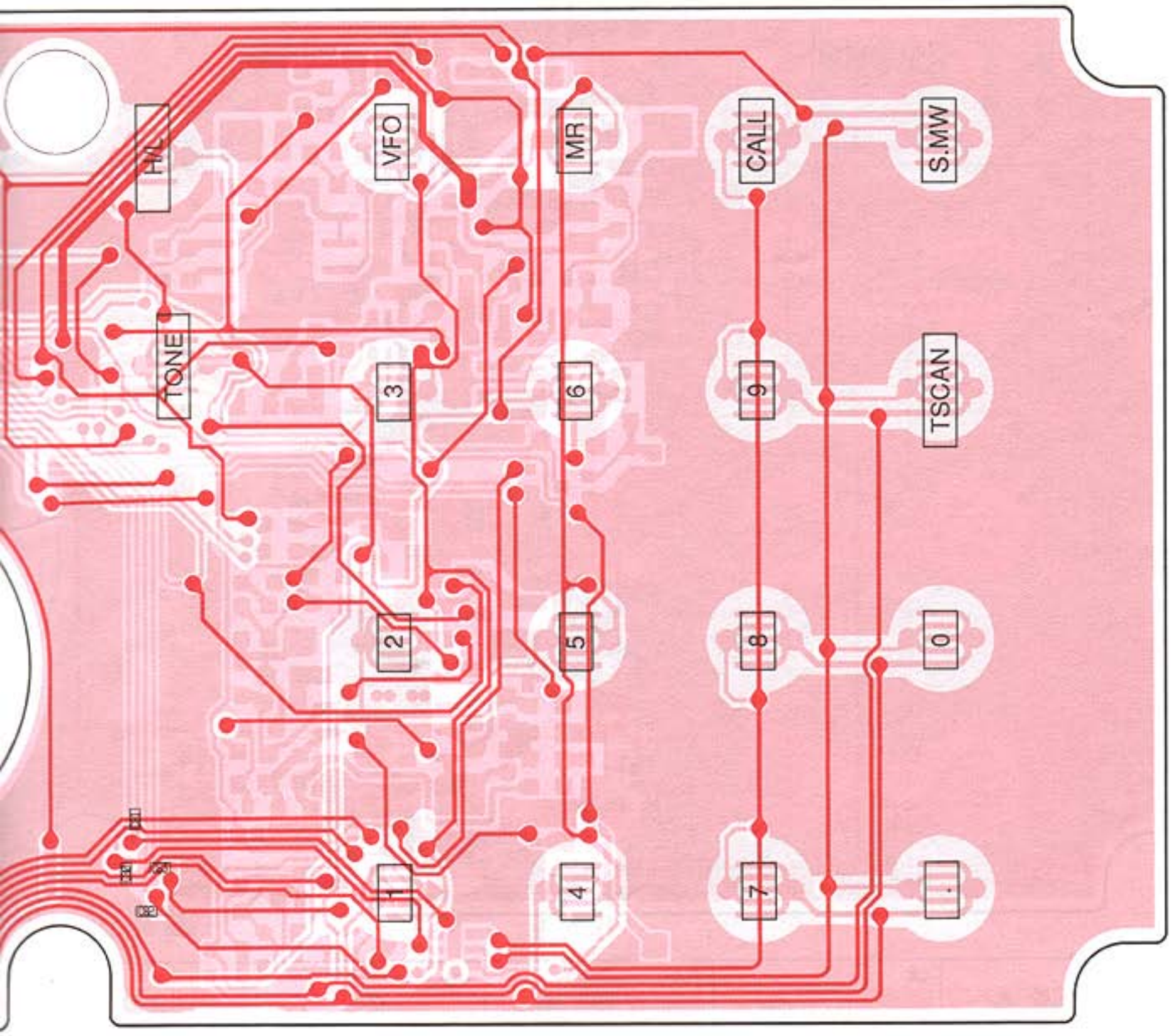

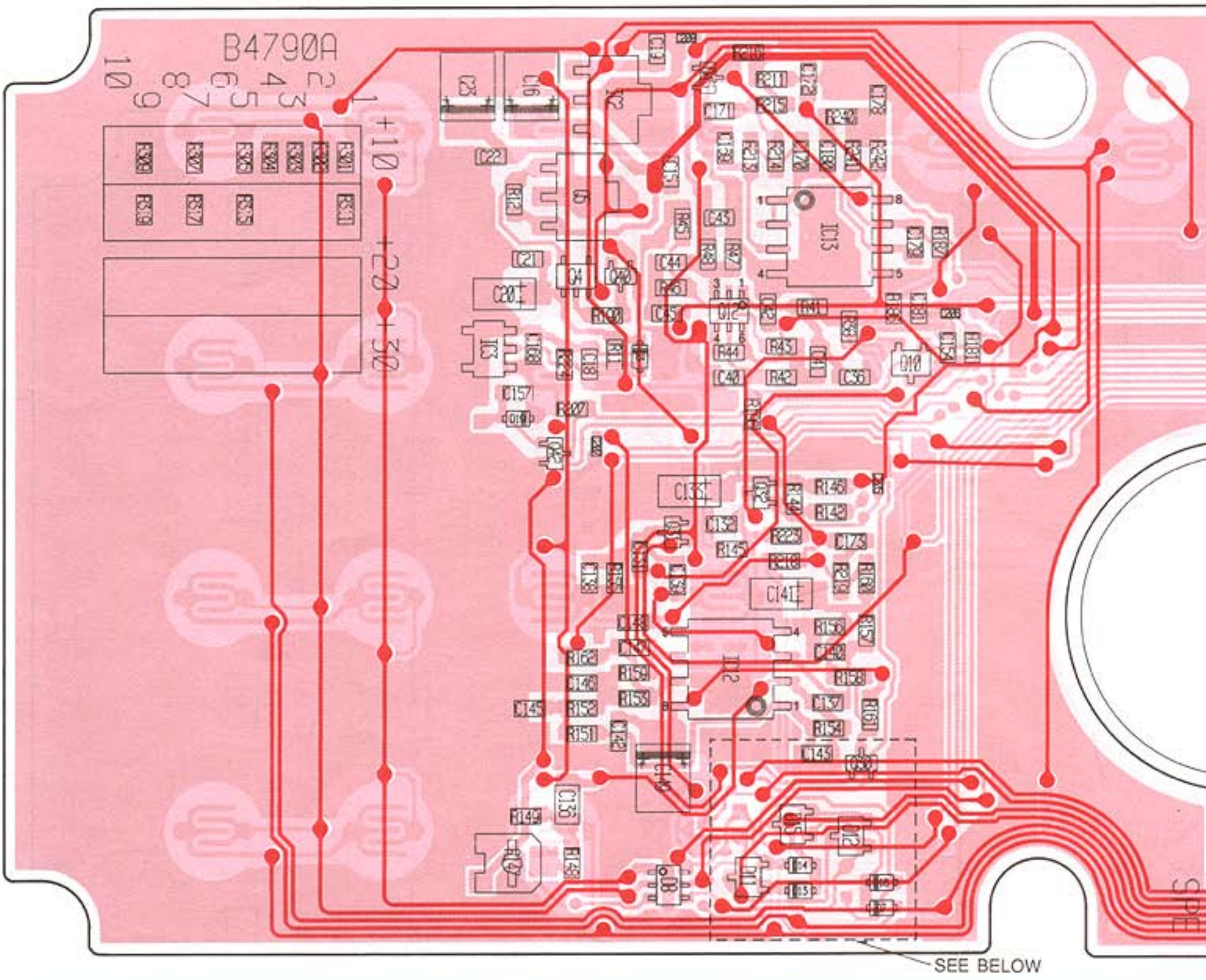
B4790A
+10
+23
+50
IC13
IC12
SEE BELOW

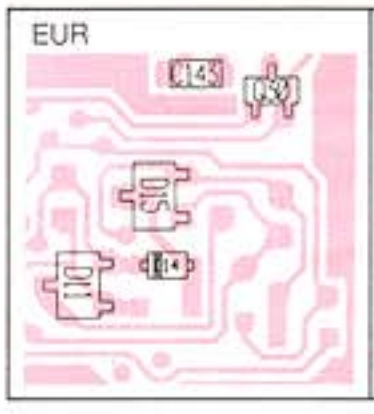
EUR

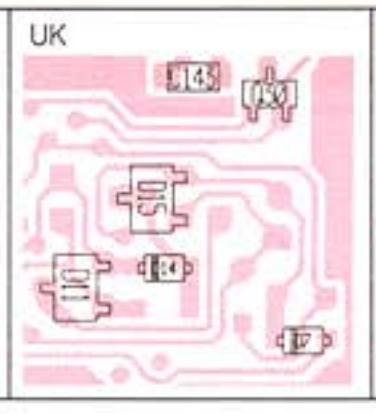
UK

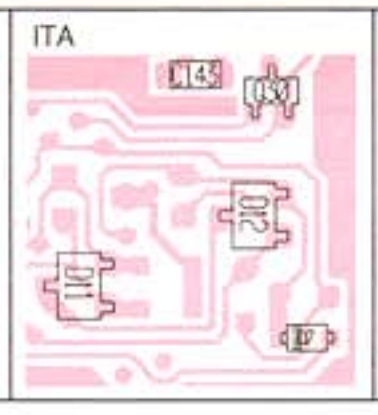
ITA

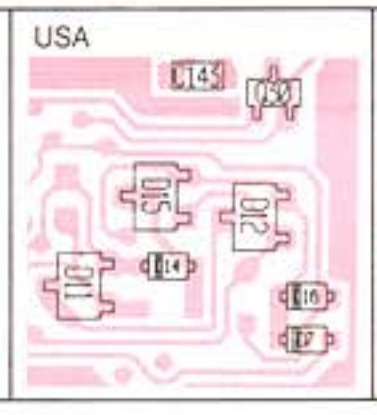
USA

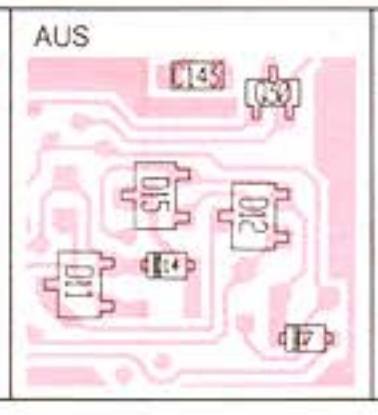
AUS


SEA

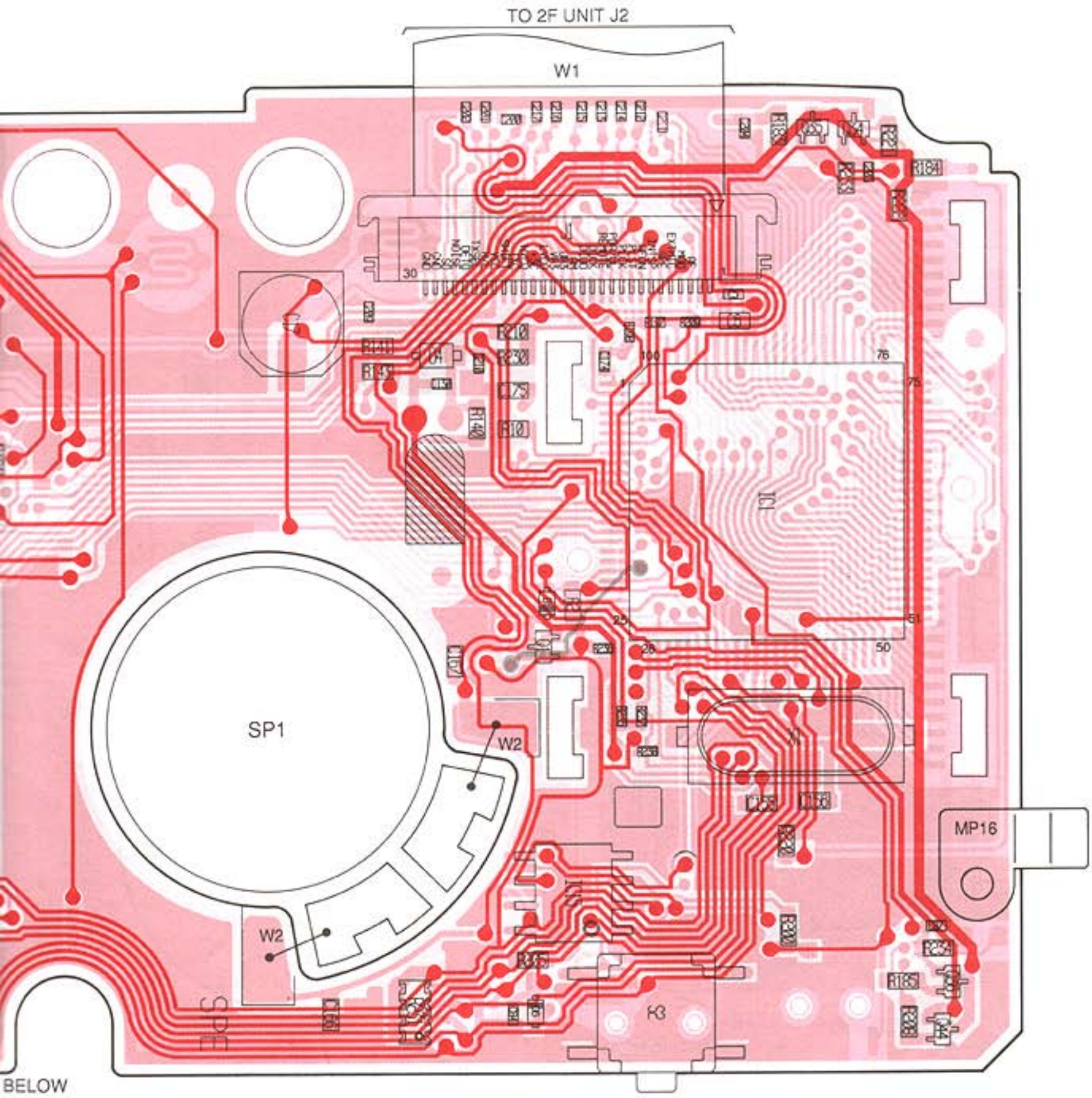
TO 2F UNIT J2
W1
SP1
W2
W2
MP16
BELOW

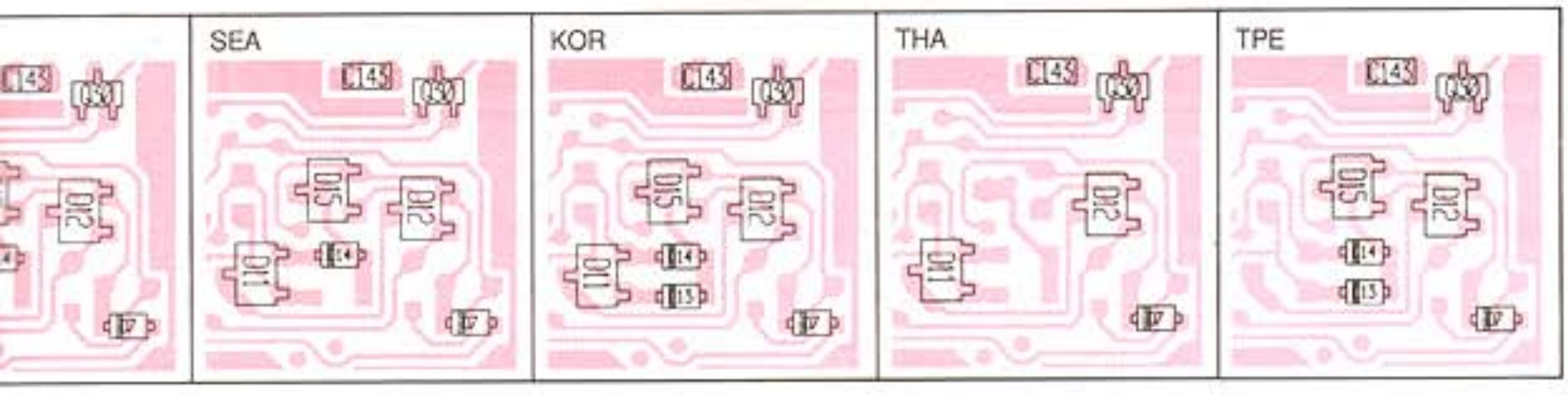
SEA
KOR
THA
TPE

9-2 2F UNIT

The combination of this page and the next page show the unit layout in the same configuration as the actual P. C. Board.

• 2F UNIT

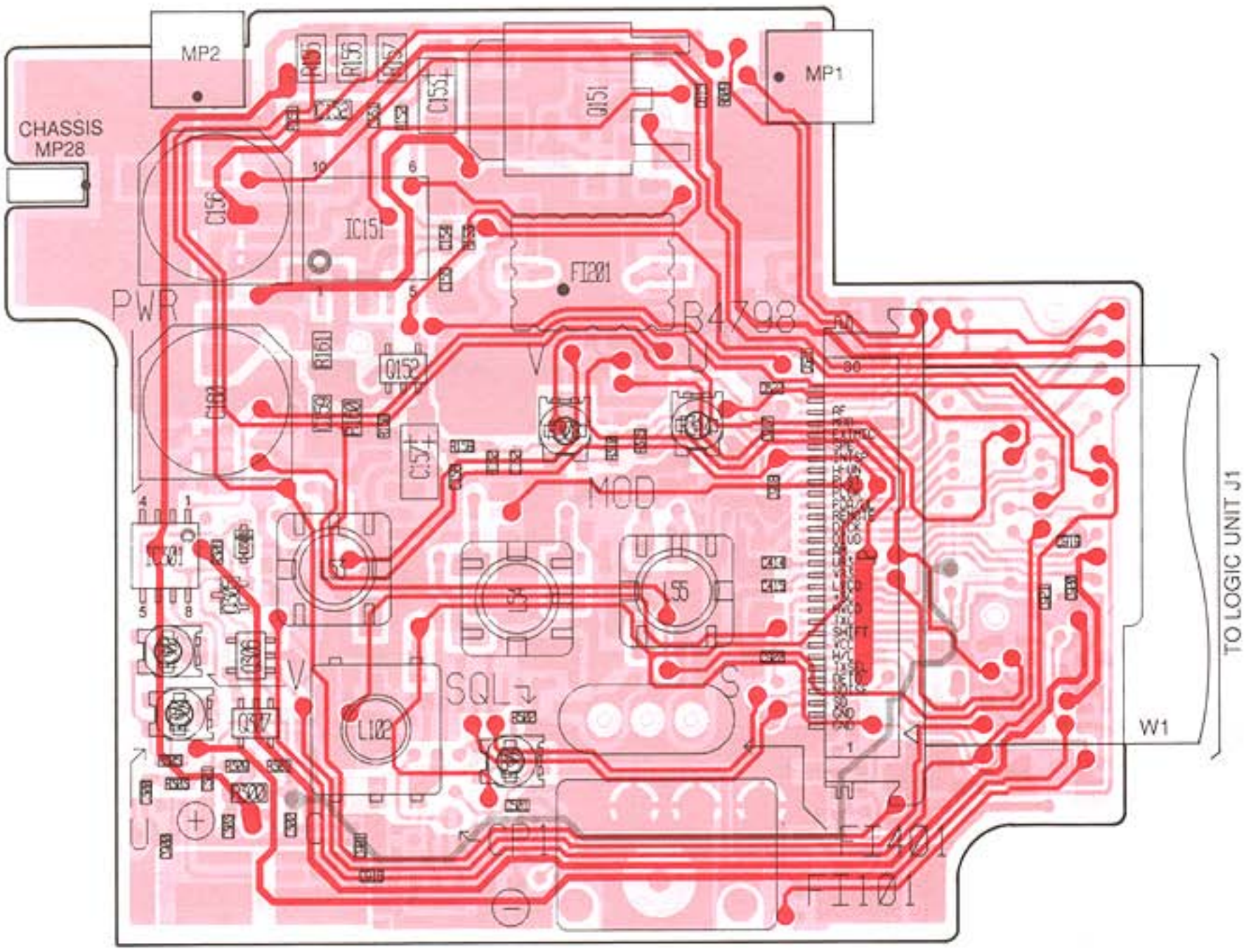

• DUAL VCO BOARD

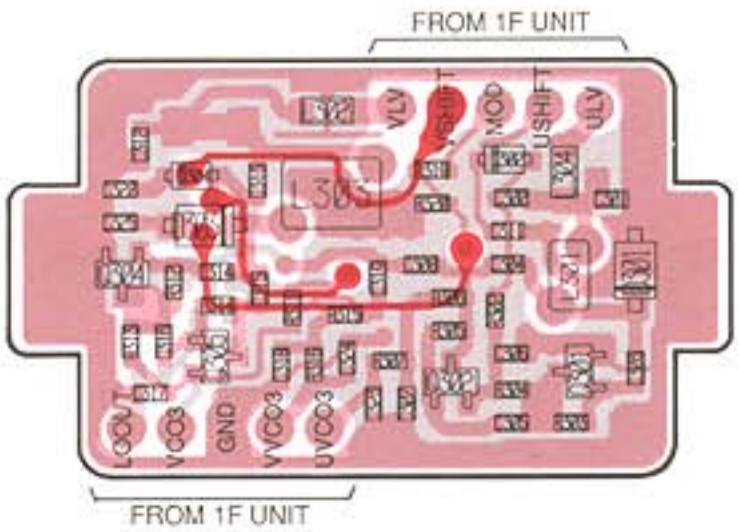

● 2F UNIT

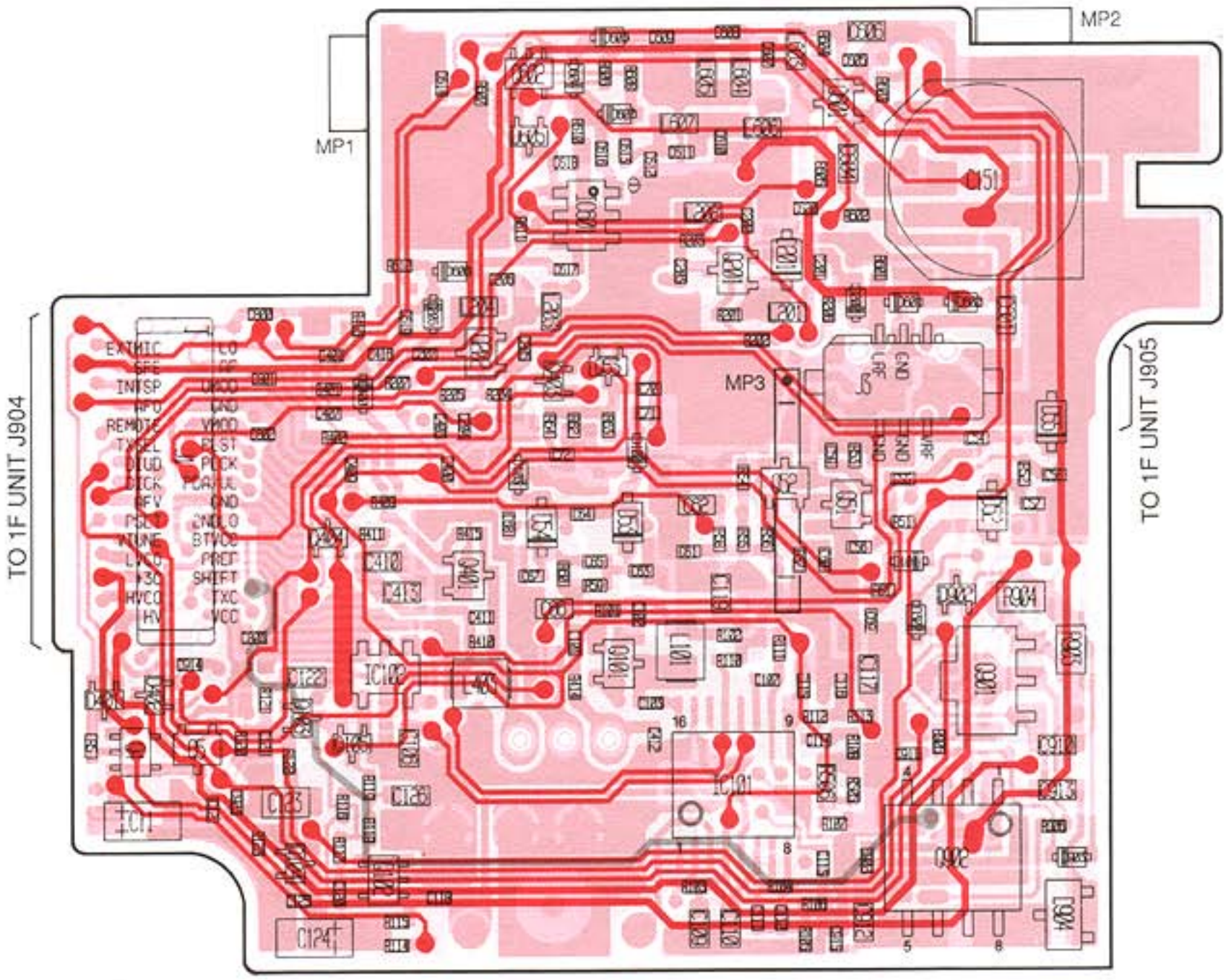

● DUAL VCO BOARD

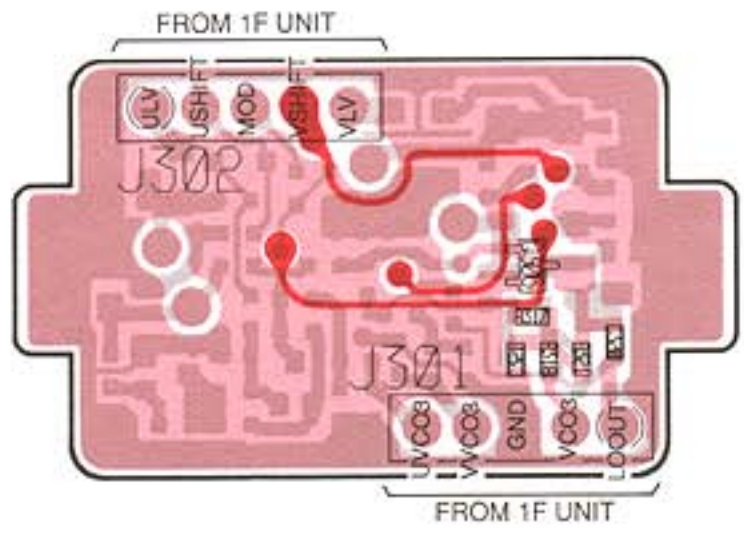

9-3 1F UNIT

The combination of this page and the next page show the unit layout in the same configuration as the actual P. C. Board.

• 1F UNIT

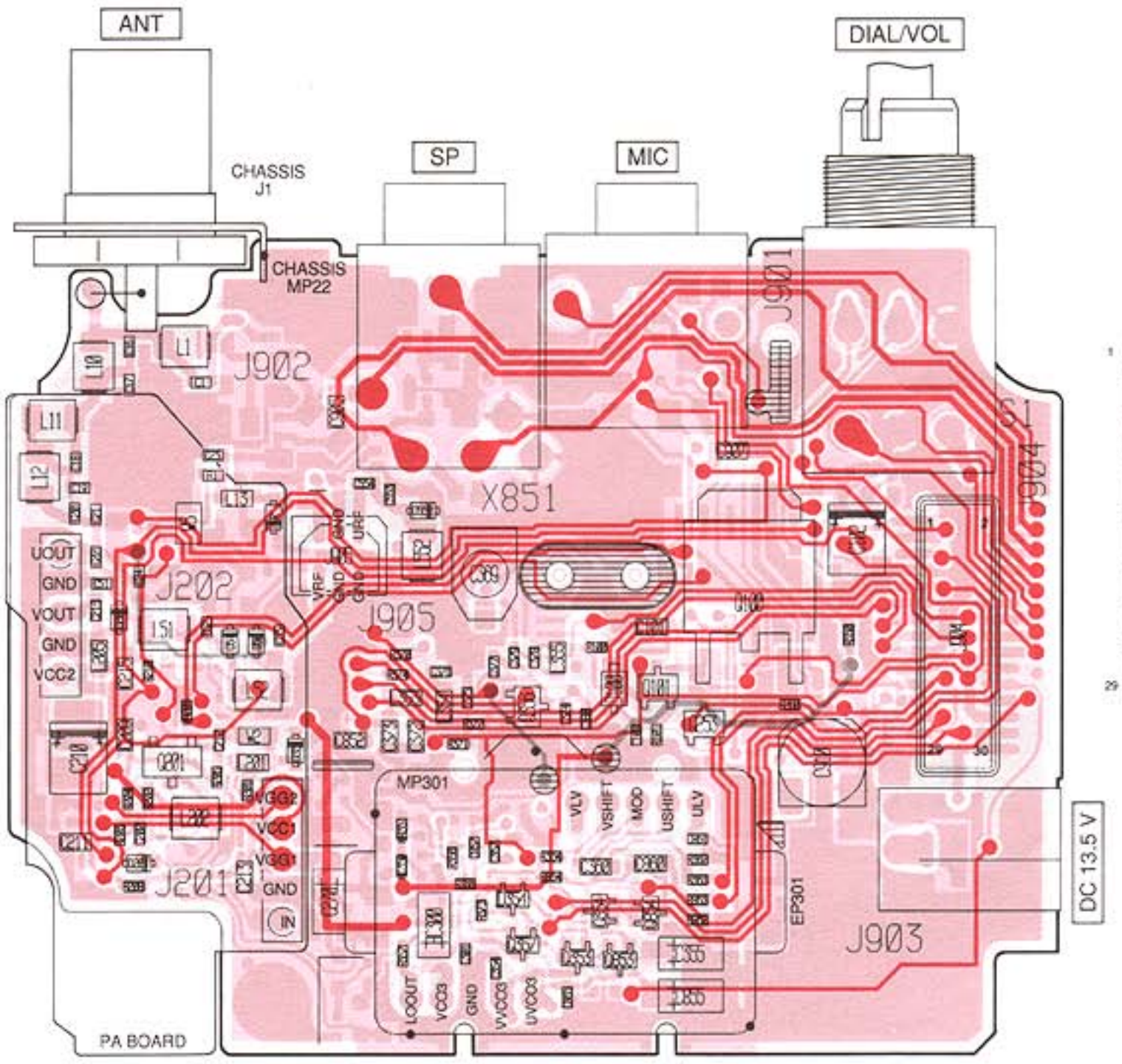

J904

1	LO	EXTMIC 2
	AF	SPE
	UMOD	INTSP
	GND	AFO
	VMOD	REMOTE
	PLST	TXSEL
	PLCK	DIUD
	PDA/UL	DICK
	GND	AFV
	2NDLO	PSET
	BTVCC	VTUNE
	PREF	LVCO
	SHIFT	+3C
	TXC	HVCO
29	VCC	HV 30

FROM 2F UNIT J1

• PA BOARD

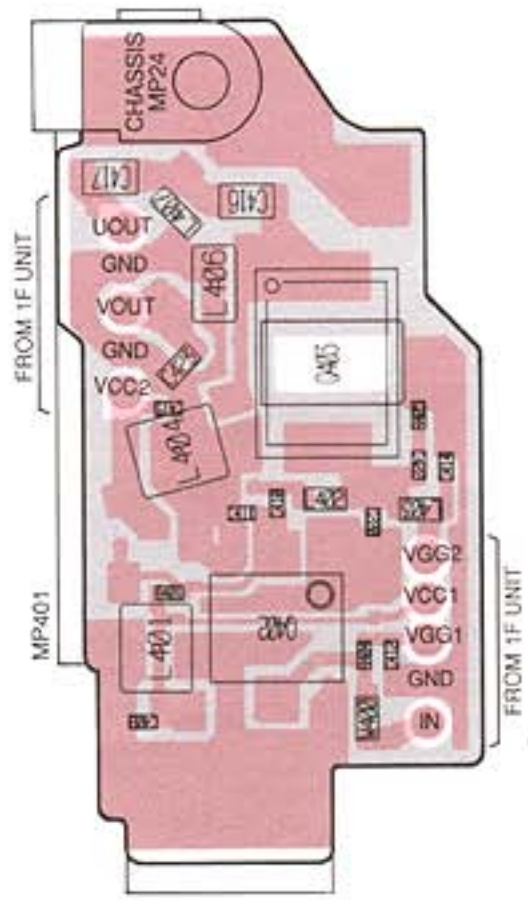

● 1F UNIT

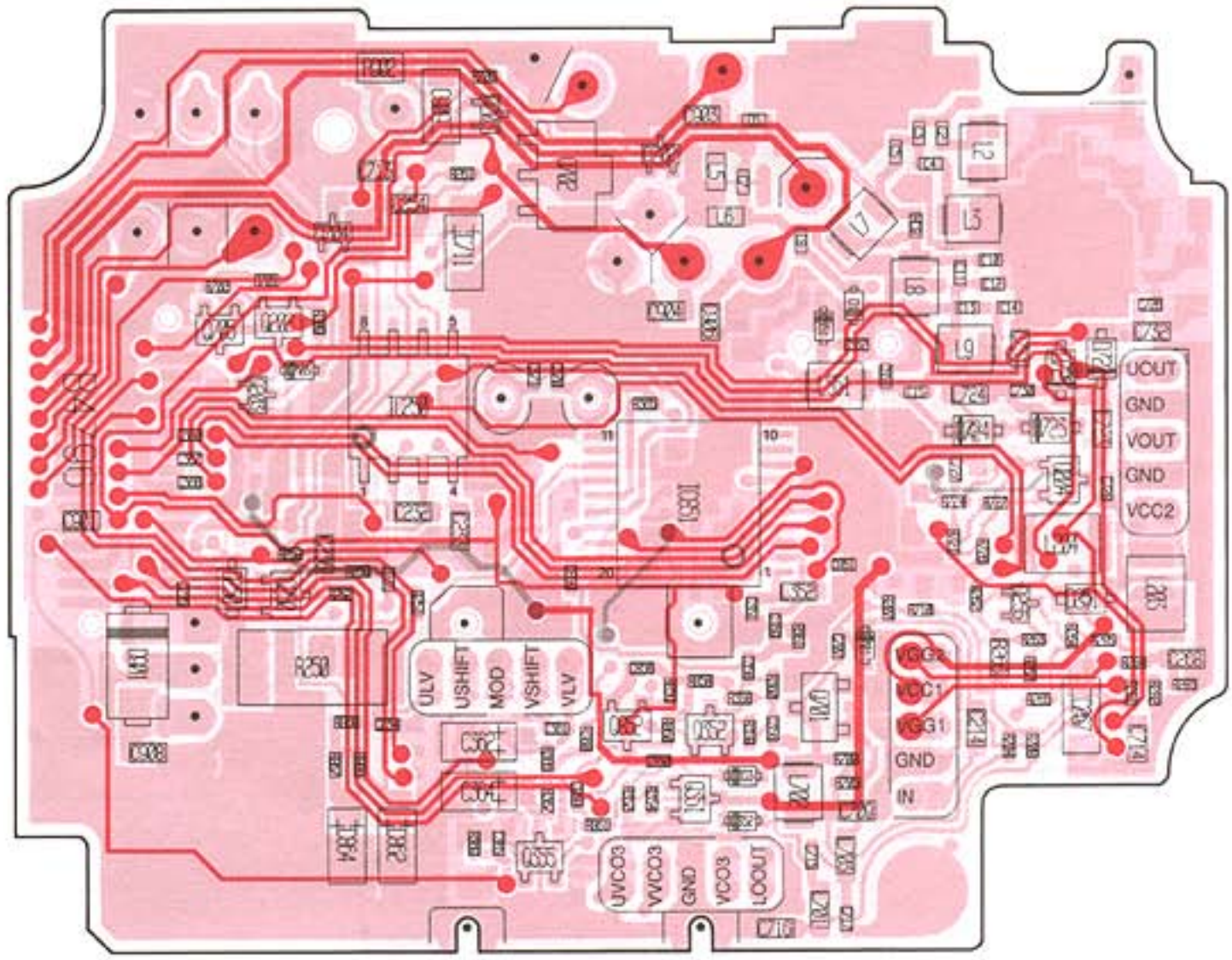
UCOUT
GND
VOUT
GND
VCC2
ULV
USHIFT
MOD
VSHIFT
VLV
VCC1
GND
IN
UVCO3
VVCO3
GND
VCO3
LOOUT

SECTION 10 BLOCK DIAGRAM

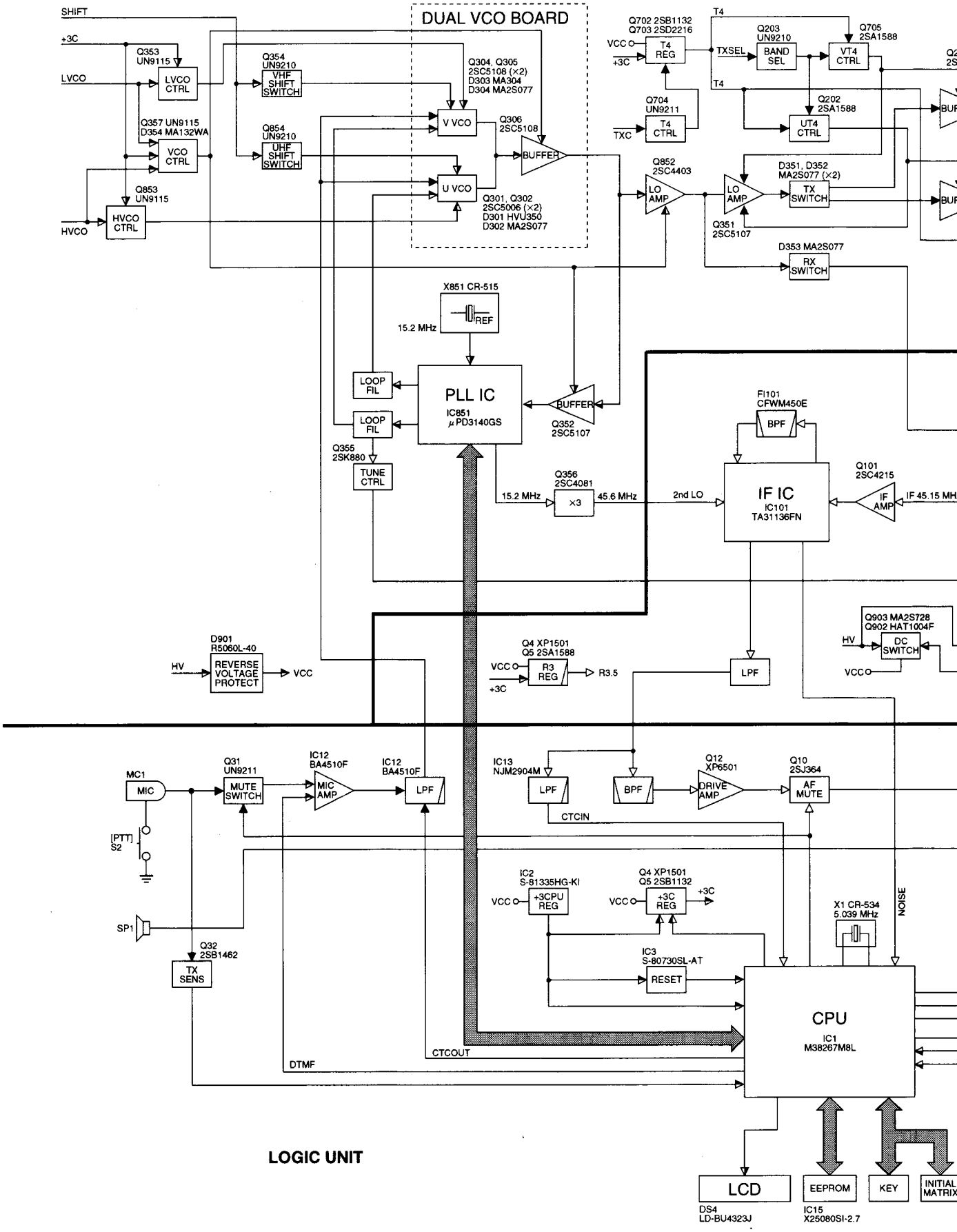

LOGIC UNIT

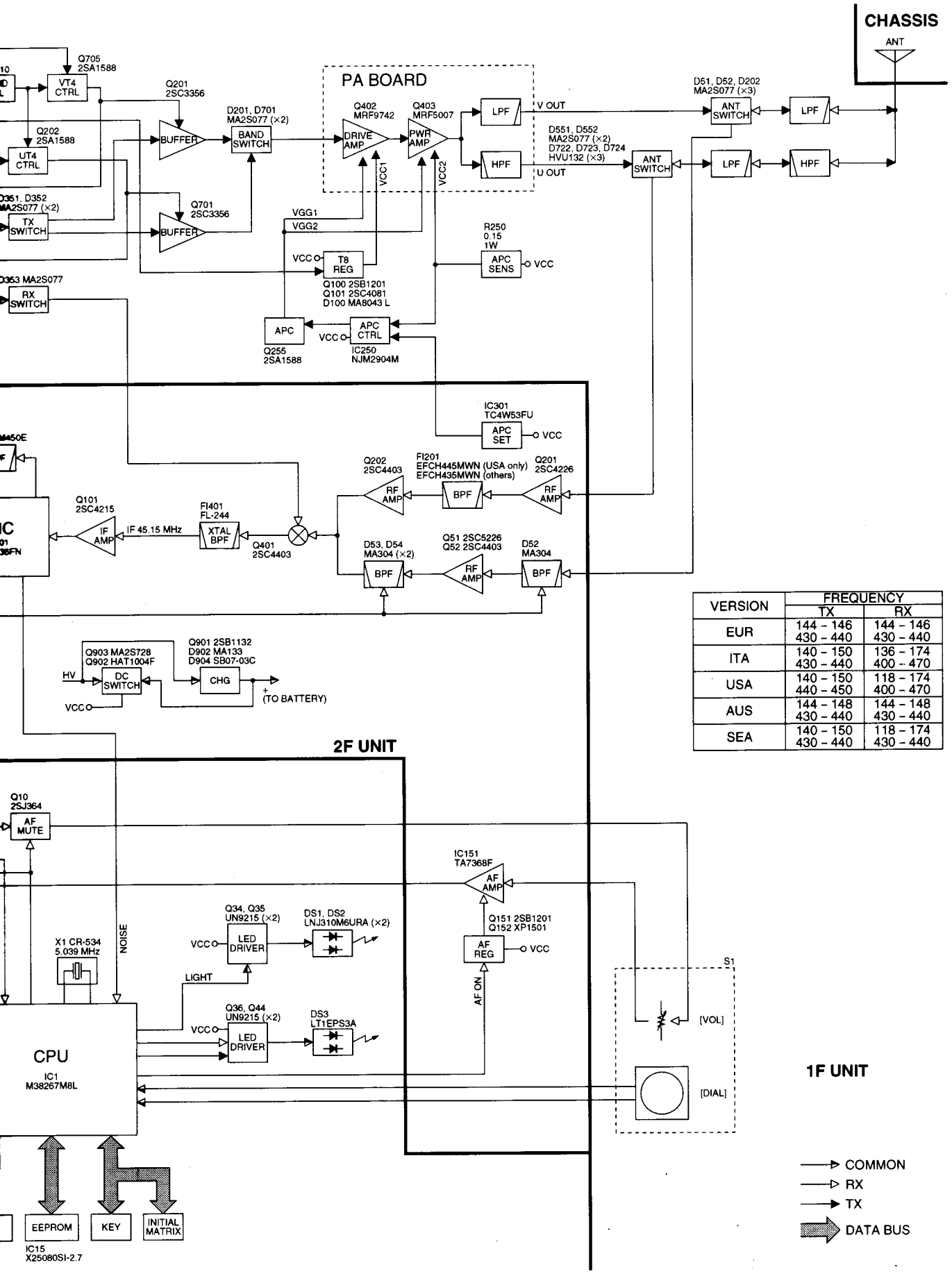

VERSION	FREQUENCY	
	TX	RX
EUR	144 - 146 430 - 440	144 - 146 430 - 440
ITA	140 - 150 430 - 440	136 - 174 400 - 470
USA	140 - 150 440 - 450	118 - 174 400 - 470
AUS	144 - 148 430 - 440	144 - 148 430 - 440
SEA	140 - 150 430 - 440	118 - 174 430 - 440

SECTION 11 VOLTAGE DIAGRAM

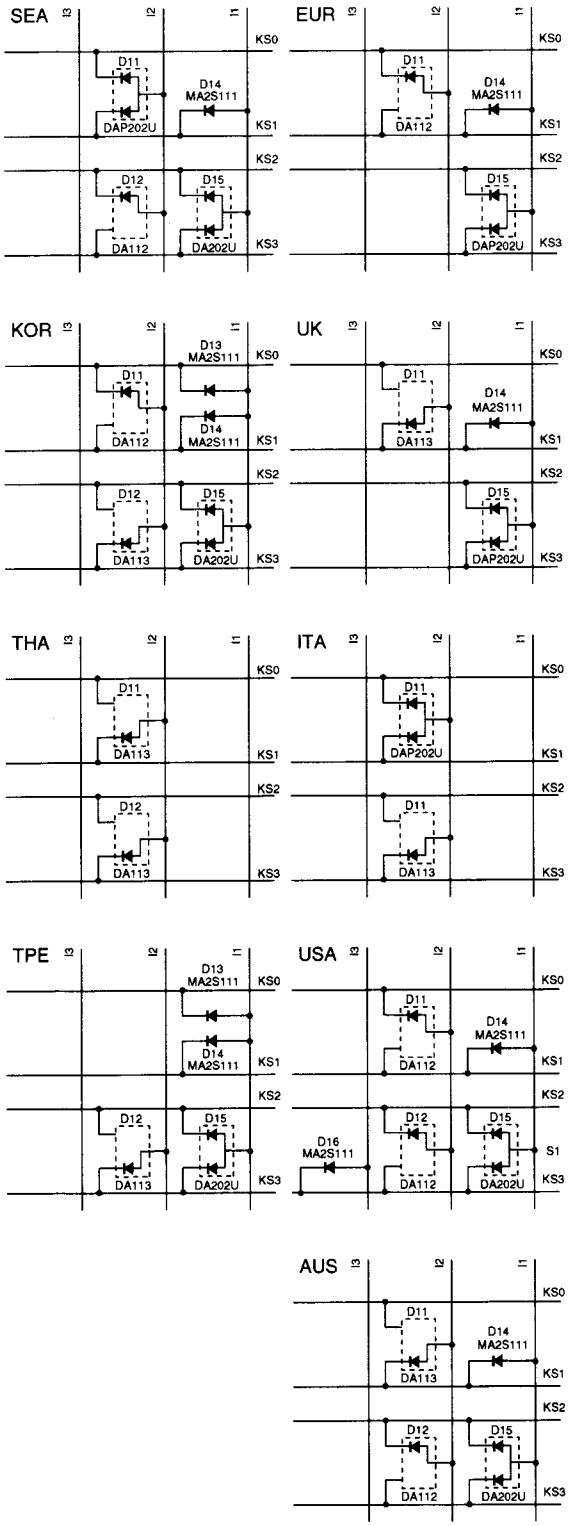

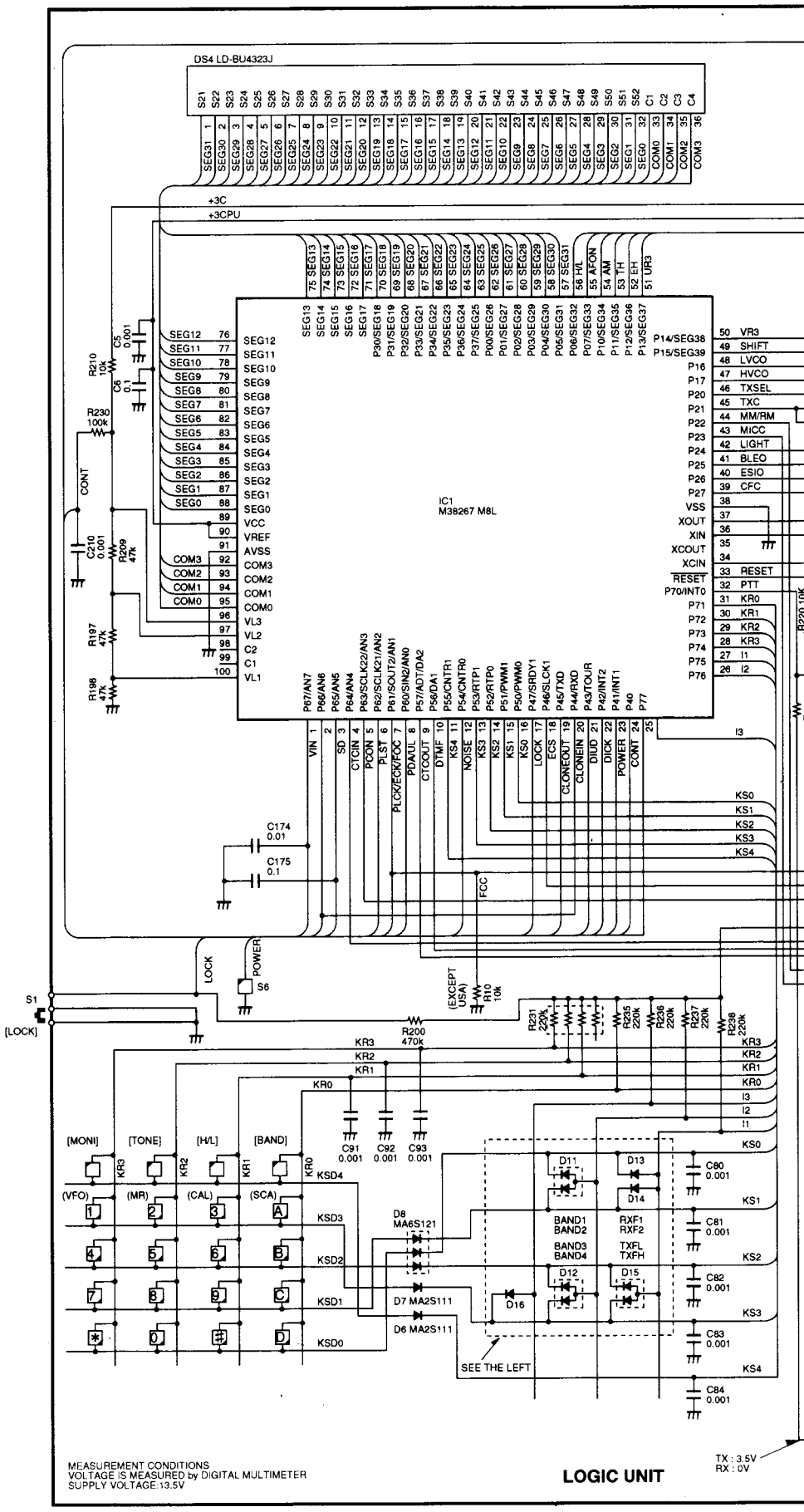

MEASUREMENT CONDITIONS
VOLTAGE IS MEASURED by DIGITAL MULTIMETER
SUPPLY VOLTAGE:13.5V

LOGIC UNIT

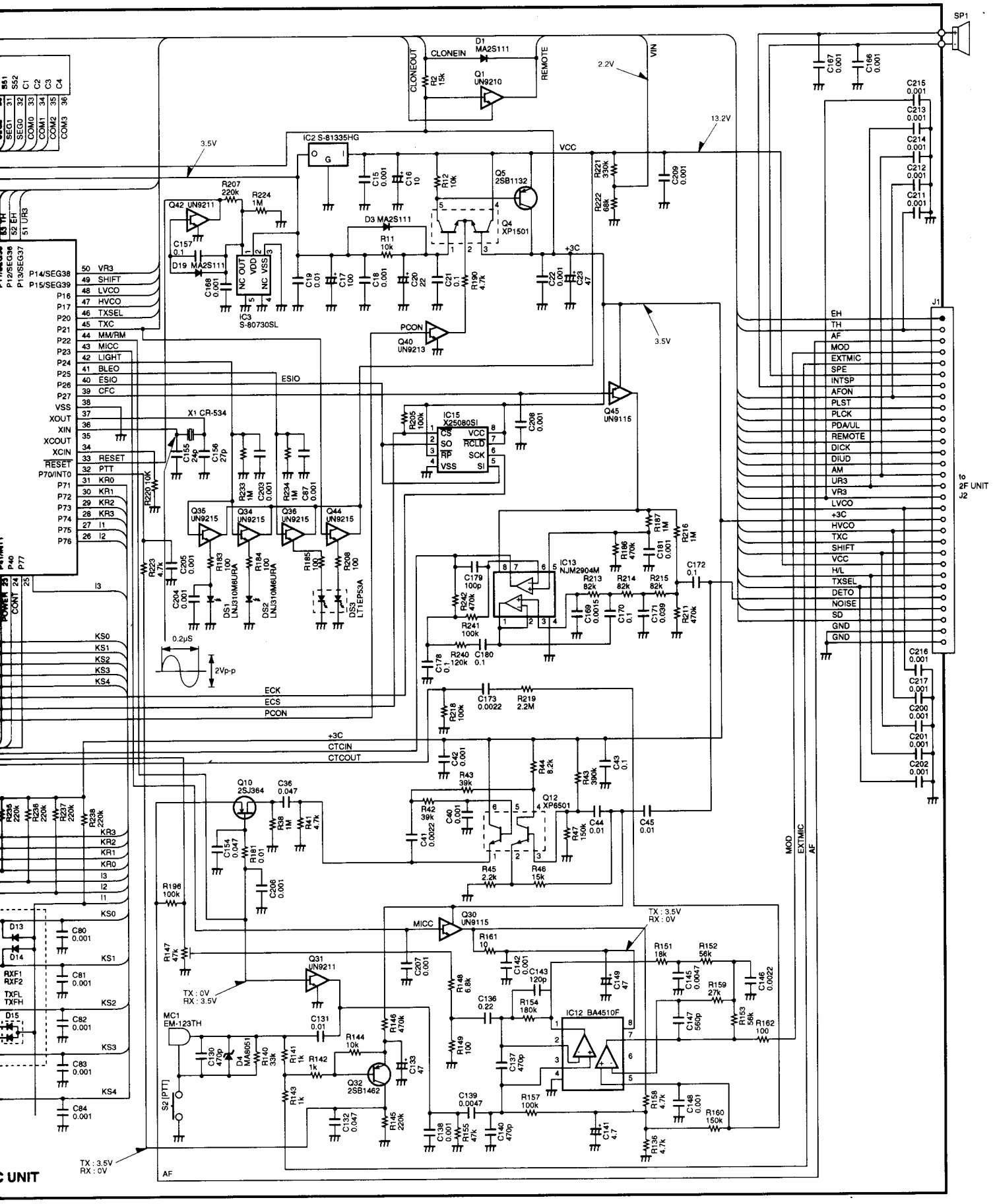
SP1
CLONEIN
CLONEOUT
REMOTE
D1 MA2S111
Q1 UN9210
R2 15k
2.2V
VIN
13.2V
VCC
IC2 S-81335HG
3.5V
Q5 2SB1132
Q4 XP1501
D3 MA2S111
Q42 UN9211
D19 MA2S111
IC3 S-80730SL
+3C
PCON
Q40 UN9213
ESIO
Q45 UN9115
IC15 X25080SI
X1 CR-534
Q35 UN9215
Q34 UN9215
Q36 UN9215
Q44 UN9215
IC13 NJM2904M
0.2μS
2Vp-p
ECK
ECS
PCON
CTCIN
CTCOUT
Q10 2SJ364
Q12 XP6501
Q30 UN9115
MICC
Q31 UN9211
MC1 EM-123TH
Q32 2SB1462
S2 [PTT]
IC12 BA4510F
TX : 3.5V
RX : 0V
TX : 0V
RX : 3.5V
AF
MOD
EXTMIC
J1
to 2F UNIT J2
EH
TH
AF
MOD
EXTMIC
SPE
INTSP
AFON
PLST
PLCK
PDA/UL
REMOTE
DICK
DIUD
AM
UR3
VR3
LVCO
+3C
HVCO
TXC
SHIFT
VCC
H/L
TXSEL
DETO
NOISE
SD
GND
GND
C UNIT

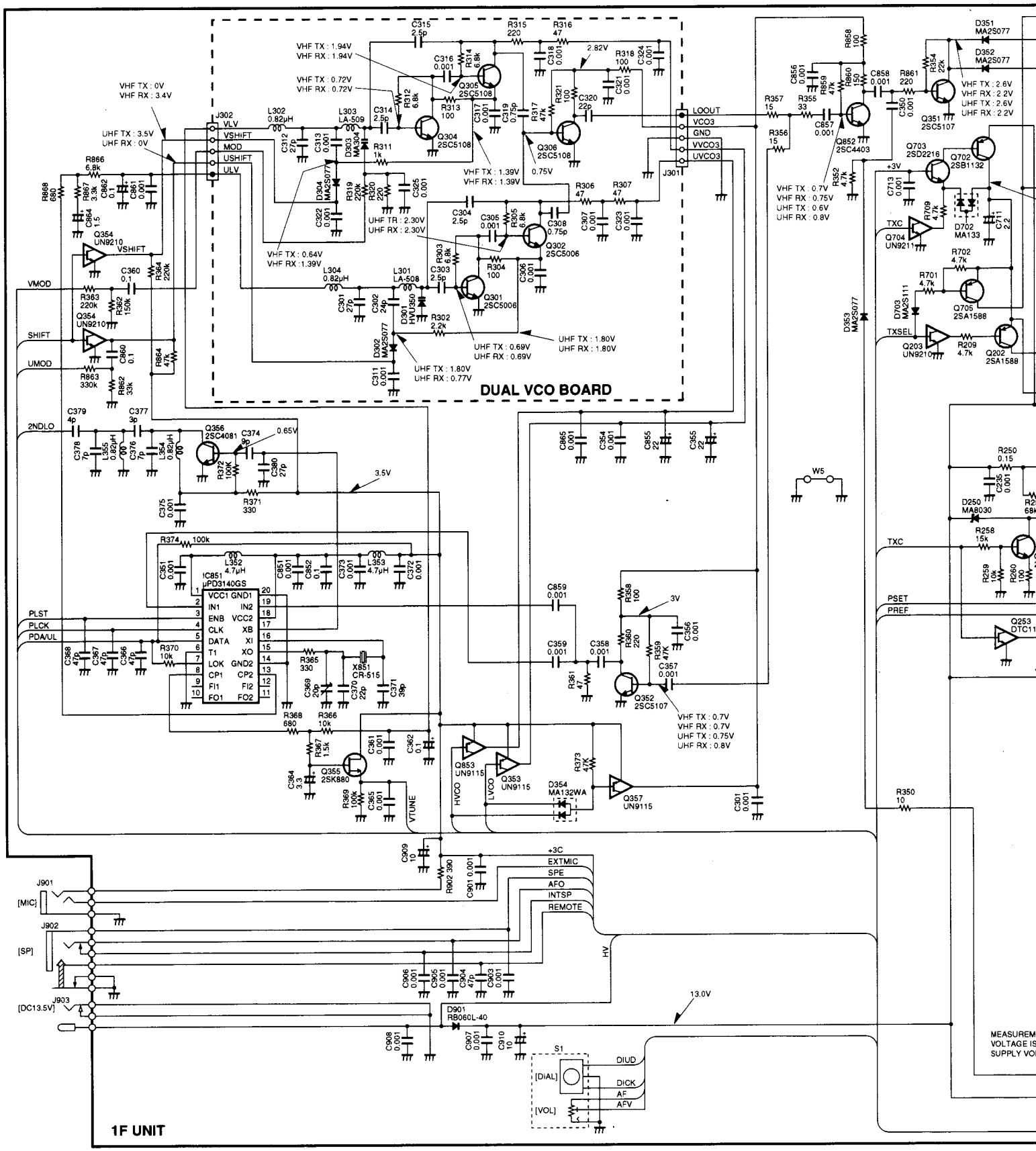
DUAL VCO BOARD
1F UNIT
J302
VLV
VSHIFT
MOD
USHIFT
ULV
J301
LOOUT
VCO3
GND
VVCO3
UVCO3
VMOD
SHIFT
UMOD
2NDLO
PLST
PLCK
PDA/UL
TXC
TXSEL
PSET
PREF
HVCO
LVCO
VTUNE
+3C
EXTMIC
SPE
AFO
INTSP
REMOTE
HV
13.0V
[MIC]
[SP]
[DC13.5V]
J901
J902
J903
S1
[DIAL]
[VOL]
DIUD
DICK
AF
AFV
W5
IC851
μPD3140GS
X851
CR-515
Q356
2SC4081
Q355
2SK880
Q352
2SC5107
Q353
UN9115
Q357
UN9115
Q354
UN9210
Q203
UN9210
Q704
UN9211
Q705
2SA1588
Q202
2SA1588
Q351
2SC5107
Q852
2SC4403
Q305
2SC5108
Q304
2SC5108
Q306
2SC5108
Q302
2SC5006
Q301
2SC5006
Q703
2SD2216
Q702
2SB1132
D901
RB060L-40
D354
MA132WA
D351
MA2S077
D352
MA2S077
D353
MA2S077
D250
MA8030
D702
MA133
D703
MA2S111
D301
HVU350
D302
MA2S077
D303
MA304
D304
MA2S077
VHF TX : 0V
VHF RX : 3.4V
UHF TX : 3.5V
UHF RX : 0V
VHF TX : 1.94V
VHF RX : 1.94V
VHF TX : 0.72V
VHF RX : 0.72V
VHF TX : 1.39V
VHF RX : 1.39V
VHF TX : 0.64V
VHF RX : 1.39V
UHF TR : 2.30V
UHF RX : 2.30V
UHF TX : 1.80V
UHF RX : 1.80V
UHF TX : 0.69V
UHF RX : 0.69V
UHF TX : 1.80V
UHF RX : 0.77V
VHF TX : 0.7V
VHF RX : 0.7V
UHF TX : 0.75V
UHF RX : 0.8V
VHF TX : 2.6V
VHF RX : 2.2V
UHF TX : 2.6V
UHF RX : 2.2V
VHF TX : 0.7V
VHF RX : 0.75V
UHF TX : 0.6V
UHF RX : 0.8V
2.82V
0.75V
0.65V
3.5V
3V
+3V

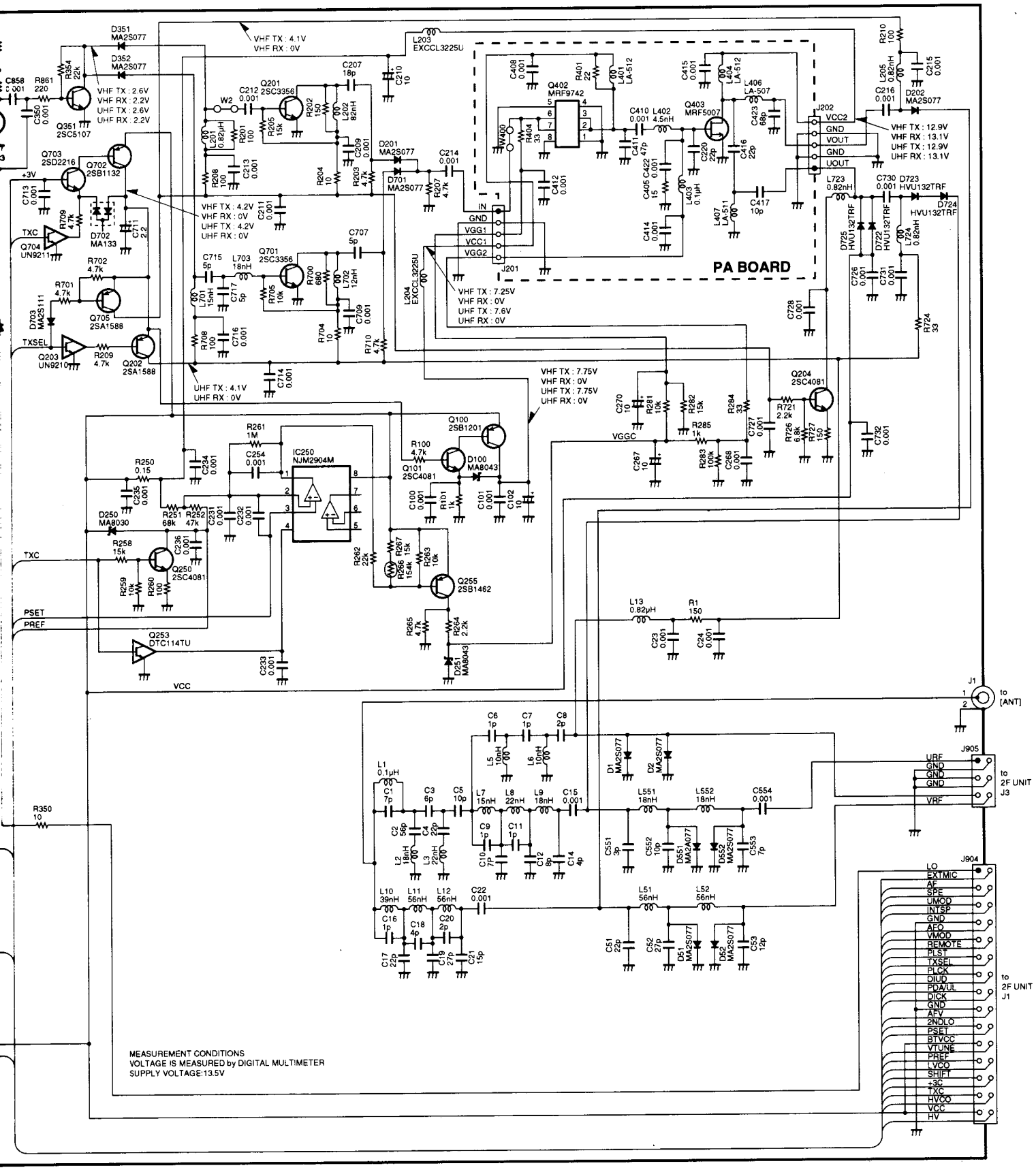
PA BOARD
VHF TX : 4.1V
VHF RX : 0V
VHF TX : 2.6V
VHF RX : 2.2V
UHF TX : 2.6V
UHF RX : 2.2V
VHF TX : 4.2V
VHF RX : 0V
UHF TX : 4.2V
UHF RX : 0V
UHF TX : 4.1V
UHF RX : 0V
VHF TX : 7.25V
VHF RX : 0V
UHF TX : 7.6V
UHF RX : 0V
VHF TX : 7.75V
VHF RX : 0V
UHF TX : 7.75V
UHF RX : 0V
VHF TX : 12.9V
VHF RX : 13.1V
UHF TX : 12.9V
UHF RX : 13.1V
IN
GND
VGG1
VCC1
VGG2
VCC2
VOUT
J201
J202
J1
to [ANT]
J905
to 2F UNIT J3
J904
to 2F UNIT J1
URF
VRF
LO
EXTMIC
AF
SPE
UMOD
INTSP
AFO
VMOD
REMOTE
PLST
TXSEL
PLCK
DIUD
PDAVUL
DICK
AFV
2NDLO
PSET
BTVCC
VTUNE
PREF
LVCO
SHIFT
+3C
TXC
HVCO
VCC
HV
TXC
PSET
PREF
VCC
VGGC
+3V
TXSEL
MEASUREMENT CONDITIONS
VOLTAGE IS MEASURED by DIGITAL MULTIMETER
SUPPLY VOLTAGE:13.5V

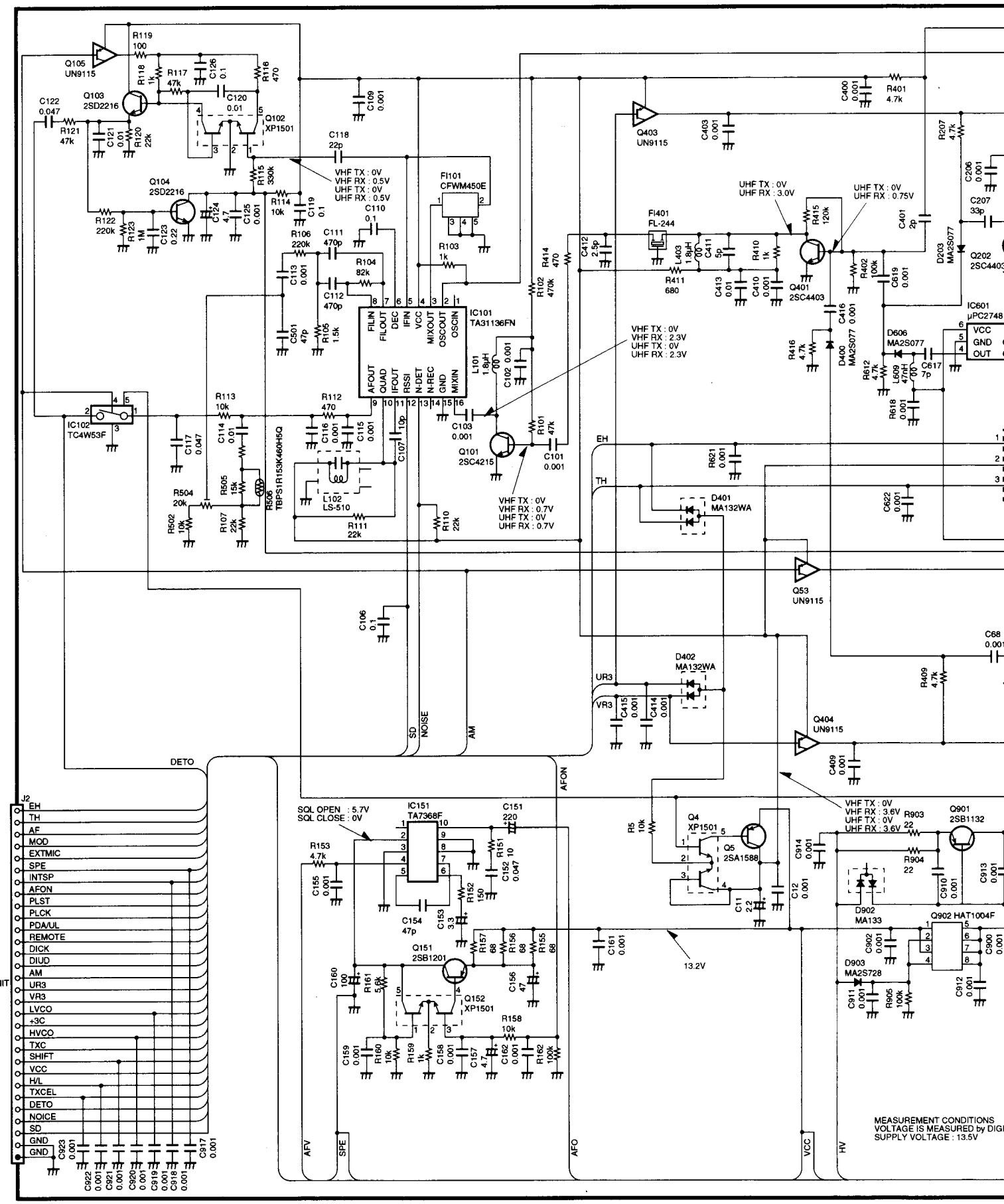
IC101 TA31136FN
FILIN FILOUT DEC IFIN VCC MIXOUT OSCOUT OSCIN
AFOUT QUAD IFOUT RSSI N-DET N-REC GND MIXIN
FI101 CFWM450E
FI401 FL-244
IC102 TC4W53F
IC151 TA7368F
IC601 μPC2748
VCC GND OUT
Q101 2SC4215
Q102 XP1501
Q103 2SD2216
Q104 2SD2216
Q105 UN9115
Q401 2SC4403
Q403 UN9115
Q404 UN9115
Q53 UN9115
Q4 XP1501
Q5 2SA1588
Q151 2SB1201
Q152 XP1501
Q901 2SB1132
Q902 HAT1004F
Q202 2SC4403
D401 MA132WA
D402 MA132WA
D606 MA2S077
D902 MA133
D903 MA2S728
L102 LS-510
TBPS1R153K460H5Q
VHF TX : 0V
VHF RX : 0.5V
UHF TX : 0V
UHF RX : 0.5V
UHF TX : 0V
UHF RX : 3.0V
UHF TX : 0V
UHF RX : 0.75V
VHF TX : 0V
VHF RX : 2.3V
UHF TX : 0V
UHF RX : 2.3V
VHF TX : 0V
VHF RX : 0.7V
UHF TX : 0V
UHF RX : 0.7V
VHF TX : 0V
VHF RX : 3.6V
UHF TX : 0V
UHF RX : 3.6V
SQL OPEN : 5.7V
SQL CLOSE : 0V
13.2V
J2
EH
TH
AF
MOD
EXTMIC
SPE
INTSP
AFON
PLST
PLCK
PDA/UL
REMOTE
DICK
DIUD
AM
UR3
VR3
LVCO
+3C
HVCO
TXC
SHIFT
VCC
H/L
TXCEL
DETO
NOICE
SD
GND
GND
to LOGIC UNIT J1
DETO
SD
NOISE
AM
AFON
AFV
SPE
AFO
VCC
HV
MEASUREMENT CONDITIONS
VOLTAGE IS MEASURED by DIGI
SUPPLY VOLTAGE : 13.5V

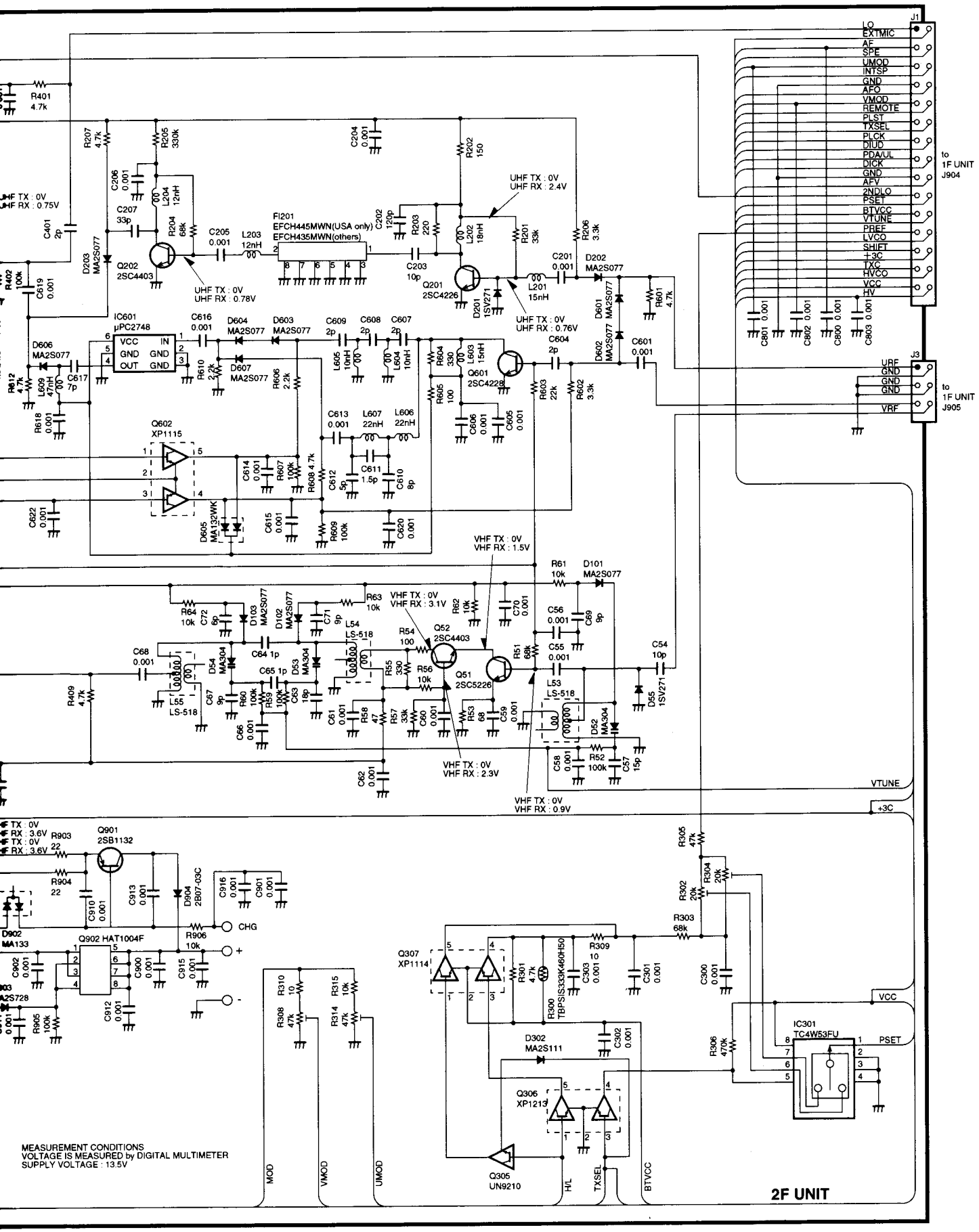
J1
LO
EXTMIC
AF
SPE
UMOD
INTSP
GND
AFO
VMOD
REMOTE
PLST
TXSEL
PLCK
DIUD
PDA/UL
DICK
GND
AFV
2NDLO
PSET
BTVCC
VTUNE
PREF
LVCO
SHIFT
+3C
TXC
HVCO
VCC
HV
to 1F UNIT J904
J3
URF
GND
GND
GND
VRF
to 1F UNIT J905
IC601 μPC2748
VCC IN
GND GND
OUT GND
Q602 XP1115
Q601 2SC4228
Q52 2SC4403
Q51 2SC5226
Q901 2SB1132
Q902 HAT1004F
Q307 XP1114
Q306 XP1213
Q305 UN9210
IC301 TC4W53FU
FI201 EFCH445MWN(USA only)
EFCH435MWN(others)
Q202 2SC4403
Q201 2SC4226
UHF TX : 0V
UHF RX : 0.75V
UHF TX : 0V
UHF RX : 0.78V
UHF TX : 0V
UHF RX : 2.4V
UHF TX : 0V
UHF RX : 0.76V
VHF TX : 0V
VHF RX : 1.5V
VHF TX : 0V
VHF RX : 3.1V
VHF TX : 0V
VHF RX : 2.3V
VHF TX : 0V
VHF RX : 0.9V
TX : 0V
RX : 3.6V
TX : 0V
RX : 3.6V
CHG
VTUNE
+3C
VCC
PSET
MOD
VMOD
UMOD
H/L
TXSEL
BTVCC
MEASUREMENT CONDITIONS
VOLTAGE IS MEASURED by DIGITAL MULTIMETER
SUPPLY VOLTAGE : 13.5V
2F UNIT

Icom Inc.

6-9-16, Kamihigashi, Hirano-ku, Osaka 547, Japan
Phone: 06 793 5302
Fax : 06 793 0013
Telex : 05277822 ICOMTR J

Icom America Inc.

<Corporate Headquarters>
2380 116th Avenue N.E., Bellevue, WA 98004, U.S.A.
Phone : (206) 454-8155
Fax : (206) 454-1509
Telex : 152210 ICOM AMER BVUE

<Customer Service>
Phone : (206) 454-7619

<Regional Customer Service Center>
18102 Sky Park SouthI, Suite 52-B, Irvine, CA 92714, U.S.A.
Phone : (714) 852-8026
Fax : (714) 852-8716

Icom Canada

A Division of Icom America Inc.
3071 #5 Road, Unit 9, Richmond, B.C., V6X 2T4, Canada
Phone : (604) 273-7400
Fax : (604) 273-1900

Icom (Europe) GmbH

Communication Equipment
Himmelgeister Str. 100, D-40225 Düsseldorf, Germany
Phone : 0211 346047
Fax : 0211 333639

Icom (Australia) Pty. Ltd.

A.C.N 006 092 575
7 Duke Street, Windsor, Victoria, 3181, Australia
Phone : 03 9529 7582
Fax : 03 9529 8485

Icom (UK) Ltd.

Unit 9, Sea St., Herne Bay, Kent, CT6 8LD, U.K.
Phone : 01227 741741
Fax : 01227 741742
Telex : 965179 ICOM G

Icom France S.a

Zac de la Plaine, Rue Brindejonc des Moulinais
BP 5804, 31505 Toulouse Cedex, France
Phone : 61. 36. 03. 03
Fax : 61. 36. 03. 00
Telex : 521515 ICOM FRA

Count on us!

Icom Inc.
6-9-16, Kamihigashi, Hirano-ku, Osaka 547, Japan

A-5374KA-S
Printed in Singapore