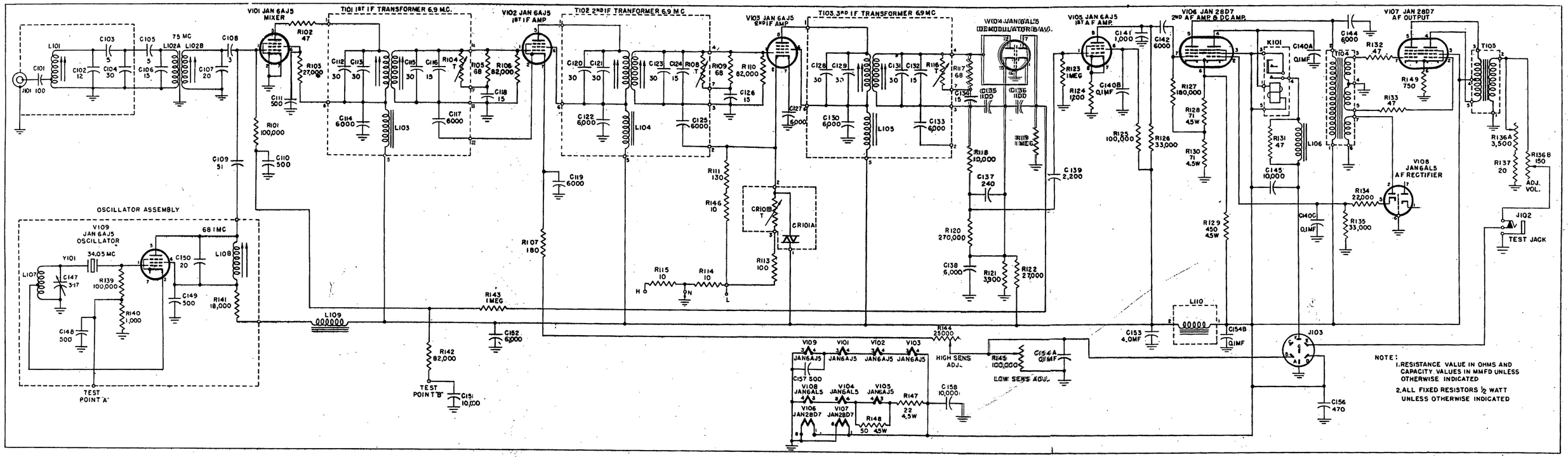

Figure 9 Radio Receiver R-122A/ARN-12, Schematic Diagram