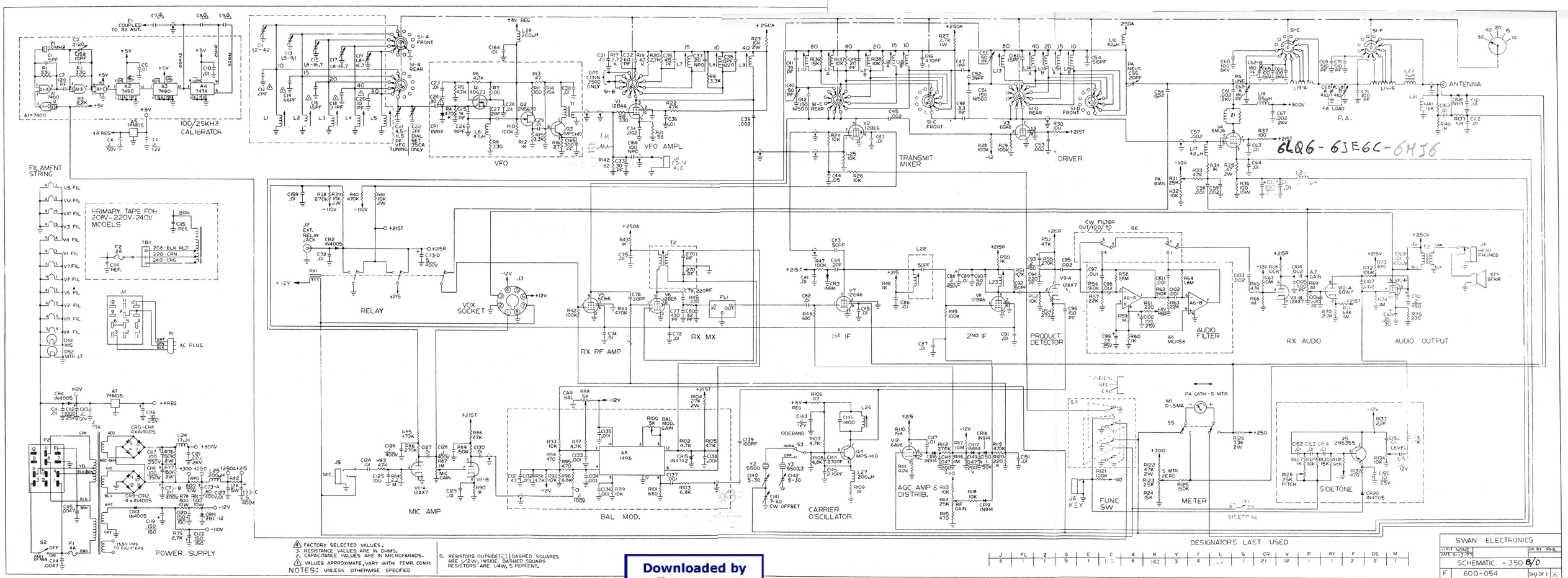

NOTES: UNLESS OTHERWISE SPECIFIED

1. FACTORY SELECTED VALUES.
2. RESISTANCE VALUES ARE IN OHMS.
3. CAPACITANCE VALUES ARE IN MICROFARADS.
4. VALUES APPROXIMATE, VARY WITH TEMP. COMP.
5. RESISTORS OUTSIDE (□) DASHED SQUARES ARE 1/2W, INSIDE DASHED SQUARES RESISTORS ARE 1/4W, 5 PERCENT.

Downloaded by RadioAmateur.EU