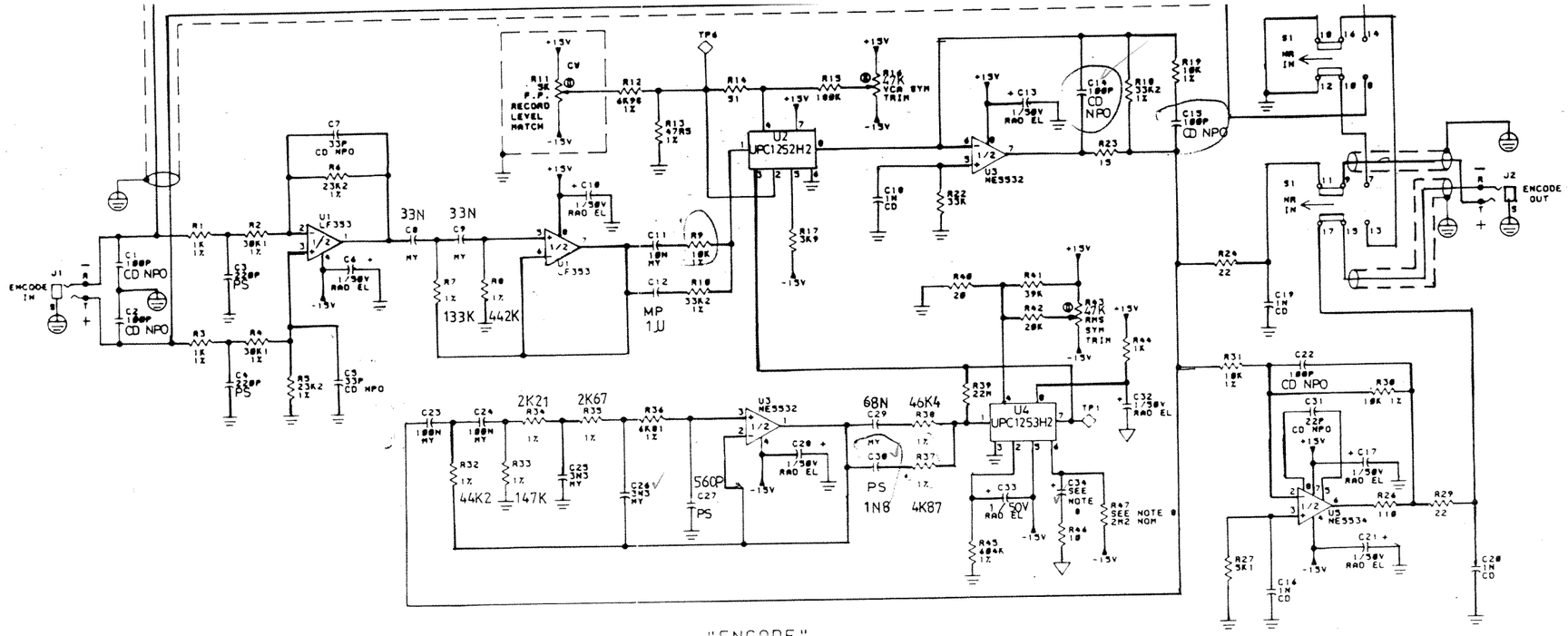

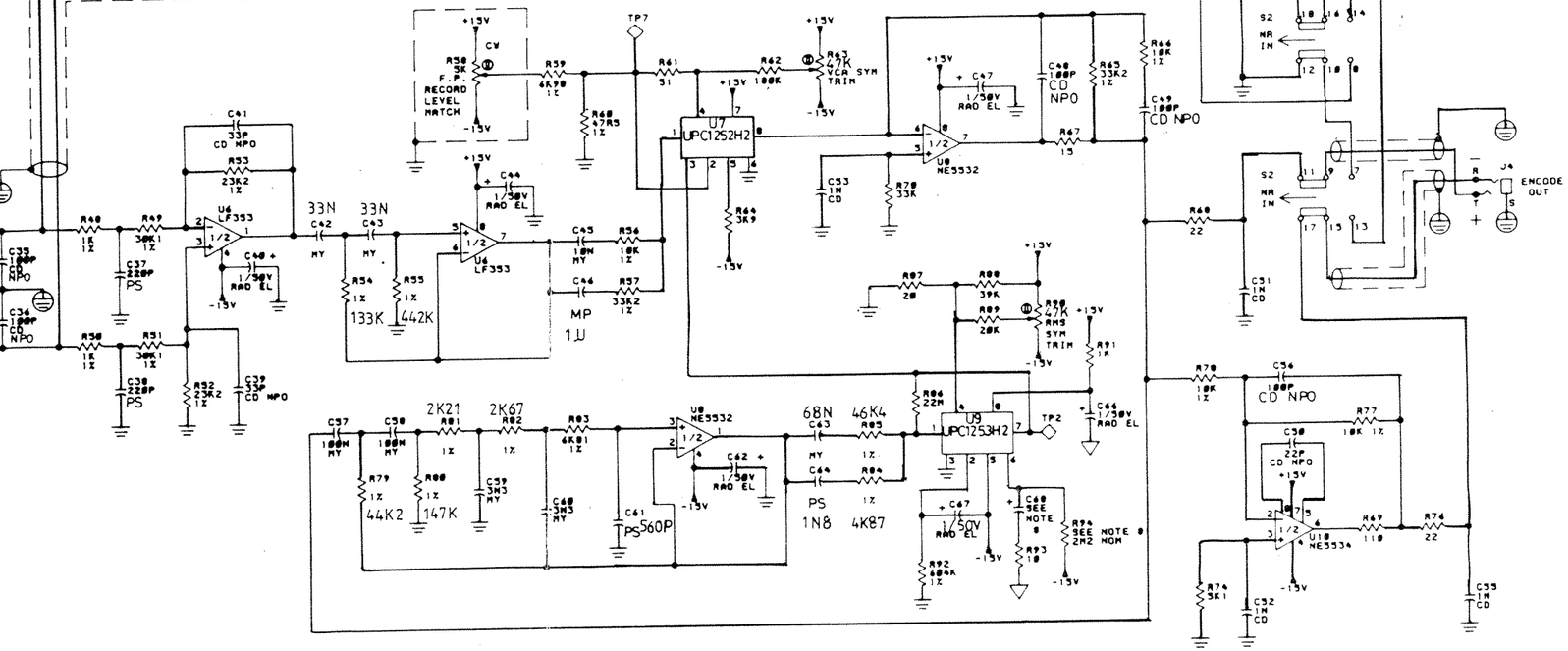

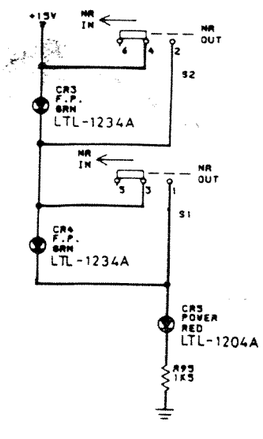

TOP BOARD LED

150X

dbx a division of AKG Acoustics, Inc.

TITLE: