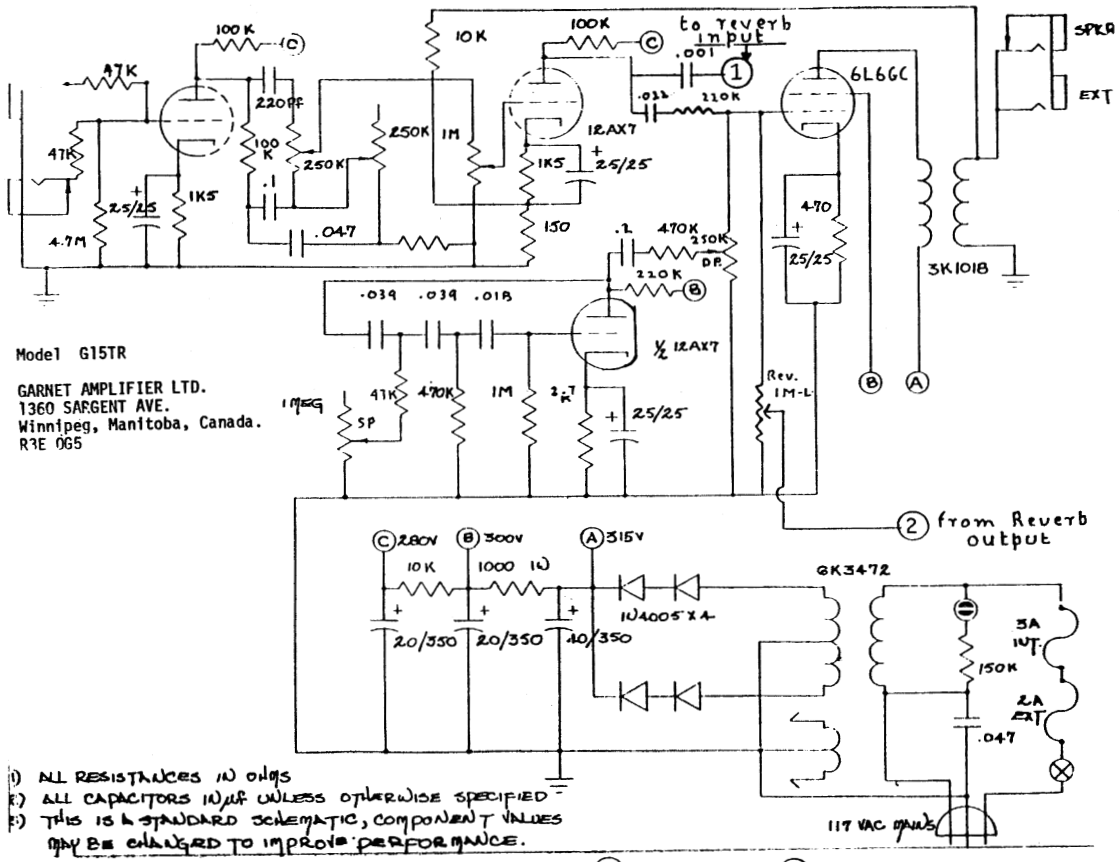

Model G15TR

GARNET AMPLIFIER LTD.
1360 SARGENT AVE.
Winnipeg, Manitoba, Canada.
R3E 0G5

1) ALL RESISTANCES IN OHMS
2) ALL CAPACITORS IN µf UNLESS OTHERWISE SPECIFIED
3) THIS IS A STANDARD SCHEMATIC, COMPONENT VALUES MAY BE CHANGED TO IMPROVE PERFORMANCE.

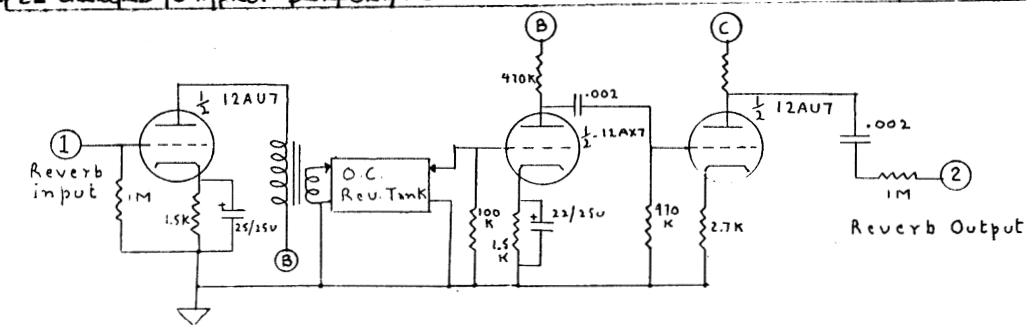

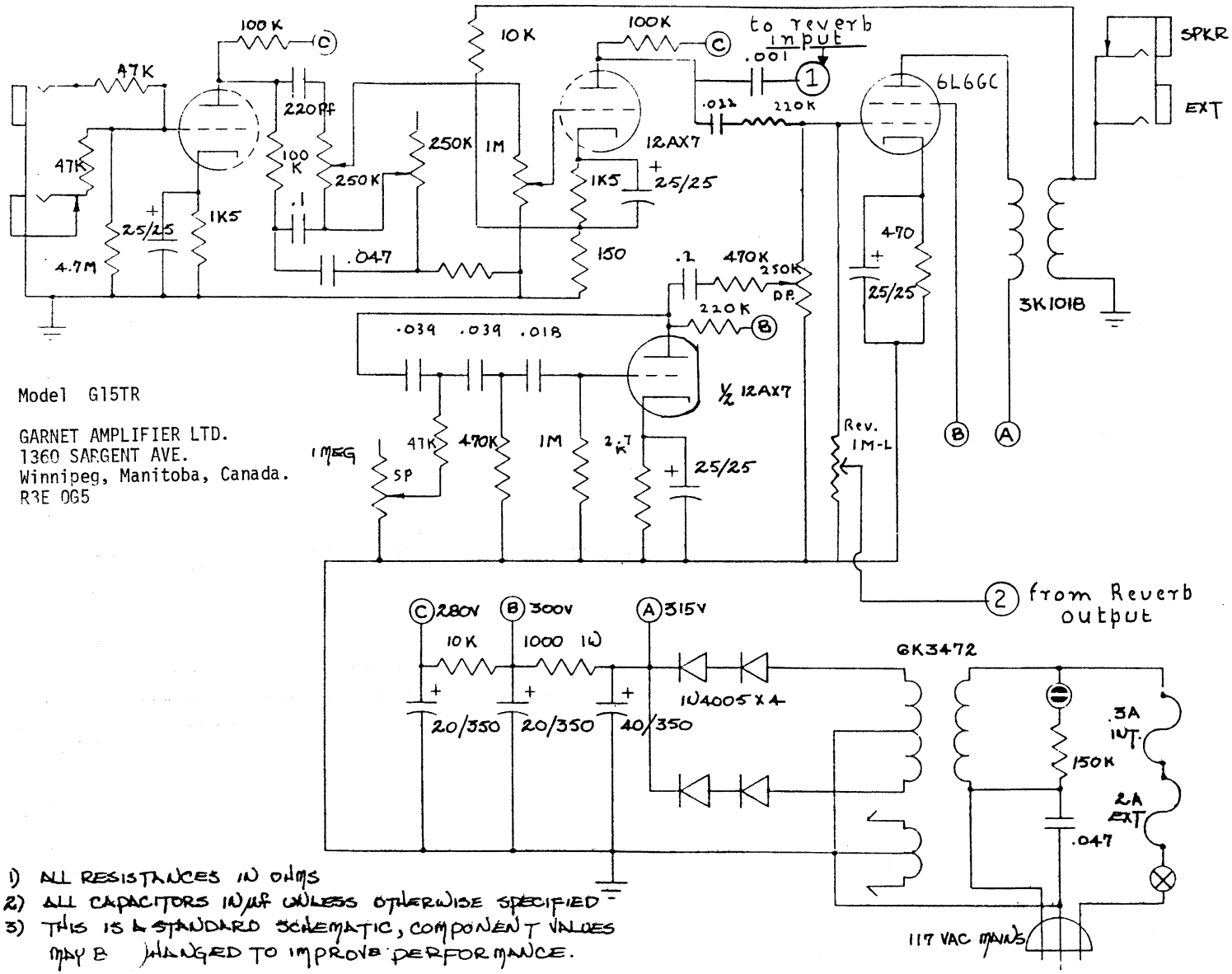

1) ALL RESISTANCES IN OHMS
2) ALL CAPACITORS IN µf UNLESS OTHERWISE SPECIFIED
3) THIS IS A STANDARD SCHEMATIC, COMPONENT VALUES MAY BE CHANGED TO IMPROVE PERFORMANCE.