K5000W/S/R

Service Manual

KAWAI Kawai Musical Instruments Manufacturing Co., Ltd.

CONTENTS

1. PARTS LIST 1
2. OPENING PROCEDURE(W type) 11
3. OPENING PROCEDURE(S type) 12
4. OPENING PROCEDURE(R type) 13
5. BLOCK DIAGRAM(W type) 14
6. BLOCK DIAGRAM(S type) 15
7. BLOCK DIAGRAM(R type) 16
8. WIRING CONNECTION(W type) 17
9. WIRING CONNECTION(S type) 18
10. WIRING CONNECTION(R type) 19
11. KEYBOARD ASSEMBLY(TP / 8S type) 20
12. KMI-062 PRINTED WIRING BOARD 21
13. KMI-062 PRINTED WIRING BOARD(Solder side) 22
14. KMI-062(1),(2),(3) CIRCUIT (1/8) 23
15. KMI-062(1),(2),(3) CIRCUIT (2/8) 24
16. KMI-062(1),(2),(3) CIRCUIT (3/8) 25
17. KMI-062(1),(2),(3) CIRCUIT (4/8) 26
18. KMI-062(1),(2),(3) CIRCUIT (5/8) 27
19. KMI-062(1),(2),(3) CIRCUIT (6/8) 28
20. KMI-062(1),(2),(3) CIRCUIT (7/8) 29
21. KMI-062(1),(2),(3) CIRCUIT (8/8) 30
22. KMI-065,066 PRINTED WIRING BOARDS(W type) 31
23. KMI-065 CIRCUIT(W type) 32
24. KMI-066 CIRCUIT(W type) 33
25. KMI-064,067~070 PRINTED WIRING BOARDS(W type) 34
26. KMI-064 CIRCUIT (W type) 35
27. KMI-067~070 CIRCUITS(W type) 36
28. KMI-081,085 PRINTED WIRING BOARDS(S type) 37
29. KMI-081,085 CIRCUITS (S type) 38
30. KMI-082~084,086~089 PRINTED WIRING BOARDS(S type) 39

31. KMI-082 CIRCUIT(S type)····· 40
32. KMI-083,084,086~088 CIRCUITS(S type)····· 41
33. KMI-089 CIRCUIT (S type)····· 42
34. KMI-091~096 PRINTED WIRING BOARDS(R type)····· 43
35. KMI-091~096 PRINTED WIRING BOARDS(R type)(Solder side)····· 44
36. KMI-092 CIRCUIT(R type)····· 45
37. KMI-091 CIRCUIT(R type)····· 46
38. KMI-093~096 CIRCUITS(R type)····· 47
39. KMI -077~079 PRINTED WIRING BOARDS(W type)····· 48
40. KMI-077 CIRCUIT····· 49
41. KMI-078 CIRCUIT····· 50
42. KMI-079 CIRCUIT····· 51

1. PARTS LIST

CASE PARTS

Code No.	Name		Pieces		
			W	S	R
804969	Volume knob	EMFD - 1028	2	2	-
808380	Incrementer knob	EMFD - 1021	1	1	-
808574	//	KMFD - 0018	-	-	1
811233	Cable bind	PLT - 1M	7	7	7
811553	Key top (S) smoke	KSFD - 0110	19	19	-
811555	// (L) //	KSFD - 0114	45	34	-
811561	Volume cover	KSFD - 0115	2	2	-
811625	End block	KMFD - 0061	1	-	-
811794	//	// //	-	1	-
811626	Side block (L)	KMFD - 0053	1	-	-
811795	//	// //	-	1	-
811627	Side block (R)	KMFD - 0054	1	-	-
811796	//	// //	-	1	-
811628	Side block cover	KMFD - 0055	1	-	-
811797	//	// //	-	1	-
811629	Panel	KMFB - 0060	1	-	-
935395	//	KMFB - 0061	-	1	-
811630	LCD cover ass'y	KMBN - 0001	1	-	-
811896	//	KMBN - 0003	-	-	1
811793	//	KMBN - 0002	-	1	-
811631	Panel sheet - W	KMFD - 0057	1	-	-
811798	// - S	KMFD - 0058	-	1	-
811632	Insulation sheet	KMFD - 0059	1	1	-
811633	Wheel knob	KMFD - 0060	2	2	-
811634	Wheel rubber	KMFZ - 0057	6	6	-
811635	leg	PL - 10 (black)	4	4	-
811724	Keyboard ass'y	TP / 8S (61 keys)	1	1	-
811787	Cloth for volume cover	KSFZ - 0156	2	2	-
910030	Metal for P.C.B.	EPFB - 1008	2	2	-
935045	Metal for base	KMFB - 0076	1	1	-
935865	//	KMFB - 0094	-	-	1
935050	Metal for side block (R)	KMFB - 0083	2	2	-
935051	// (L)	KMFB - 0083	1	1	-
935055	Metal for rear of keyboard	KMFB - 0064	1	1	-
811733	Screw - Mount tie for cable	T18MR	5	5	-
935060	Metal for front of keyboard	KMFB - 0065	1	1	-
935065	Metal for transformer	KMFB - 0066	1	1	-
935070	Metal for FDD	KMFB - 0067	1	1	-
935075	Metal for main P.C.B.	KMFB - 0069	1	1	-
935845	//	KMFB - 0090	-	-	1

Code No.	Name		Pieces		
			W	S	R
935080	Metal for encoder	KMFB - 0070	1	1	-
935085	Metal for LCD (R)	KMFB - 0071	1	1	-
935086	Metal for LCD (L)	KMFB - 0071	1	1	-
935095	Metal for power supply P.C.B.	KMFB - 0073	1	1	-
935890	〃	KMFB - 0084	-	-	1
935105	Metal for wheel	KMFB - 0068	2	2	-
935110	Wheel spring	KMFB - 0075	1	1	-
935150	Reinforcement for side block	KMFB - 0082	1	1	-
935440	Metal - 2 for volume	KMFB - 0081	-	1	-
935410	Base lid	KMFB - 0077	1	1	1
802548	PE sheet	0.03 × 1450 × 930	1	1	-
811849	Partition sheet	KMFD - 0072	1	1	1
811799	Round knob (φ12) (for plastic shaft)	KMFD - 0063	-	18	-
811897	〃 (for Al. shaft)	KMFD - 0071	-	-	2
811899	Key top 2 (with lens)	KMFD - 0069	-	-	1
935400	Metal for end block P.C.B.	KMFD - 0078	-	1	-
810031	Power switch knob	KMFD - 0008	-	-	1
811104	Power switch knob guide	KMFD - 0009	-	-	1
811900	Spacer	RSPS - 6	-	-	7
935880	〃	SQ - 6 (for M3)	-	-	4
812006	Key top (2 rectangles)	KMFD - 0068	-	-	4
811898	〃 (3 〃)	KMFD - 0068	-	-	6
812007	〃 (1 rectangle)	KMFD - 0068	-	-	11
935825	Rib (L)	KMFB - 0099	-	-	1
935830	Rib (C)	KMFB - 0087	-	-	1
935835	Rib (R)	KMFB - 0098	-	-	1
935840	Front chassis	KMFB - 0089	-	-	1
935850	Metal for transformer	KMFB - 0091	-	-	1
935855	Reinforcement for panel	KMFB - 0092	-	-	2
935860	Rear panel	KMFB - 0093	-	-	1
935870	Upper cover	KMFB - 0095	-	-	1
812037	Round knob (φ12) (for Al. shaft)	KMFD - 0070	-	2	-
811890	Spacer	RSPLS - 6	-	-	12
935875	Front panel	KMFB - 0097	-	-	1
811901	Case leg	FF - 004 (A)	-	-	4

ELECTRIC PARTS

Code No.	Name		Pieces		
			W	S	R
236744	Printed wiring board ass'y	KMI - 062 (1)	1	-	-
236762	//	KMI - 062 (2)	-	1	-
236779	//	KMI - 062 (3)	-	-	1
236745	//	KMI - 064 ~ 070 (1)	1	-	-
236763	//	KMI - 081 ~ 089 (1)	-	1	-
236783	//	KMI - 091 ~ 096 (1)	-	-	1
805995	Volume (modulation)	RK163110 50K	1	1	-
805996	// (pitch bend)	// 50K C・T	1	1	-
811475	LCD	HG24503 NG - EW	1	1	1
811488	FDD	MF355F - 2252MG	1	1	1
811534	Power switch	EST 206B	1	1	-
811643	AC inlet	AC - P01CF01	1	1	1
811648	Transformer	KT - 010	1	1	1
811733	Cable bind	T18MR	5	5	-
811734	Supplement disk	KP184	1	-	-
811810	//	KP185	-	1	-
936220	//	KP194	-	-	1
811877	System disk	KP188	1	-	-
811876	//	KP189	-	1	-
935885	//	KP190	-	-	1
811914	APG data convert disk	KP193	1	-	-
811642	Connector	7620 - 6002FL	1	1	1
811739	//	5483 - 03AX	1	1	1
811615	AC cable (US , CA)	UC01K - 3S - 325B - 3A	1	1	1
811619	// (AU)	SA01H - 3S - 325B - 3A	1	1	1
811620	// (GE120 , D)	JS01K - 2S - 225B - 3A	1	1	1
811616	// (GE230 , FR , SI , CE)	CE01K - 3S - 325B - 3A	1	1	1
811617	// (EG)	BS01K - 3S - 325B - 3A	1	1	1
935140	FDD cable	KMBB - 0053	1	1	-
935905	//	KMBB - 0074	-	-	1
935145	LCD cable	KMBB - 0054	1	1	-
935910	//	KMBB - 0075	-	-	1
935155	Keyboard cable	KMBB - 0051	2	2	-
935225	Heaphone cable	KMBB - 0062	1	1	-
935925	//	KMBB - 0084	-	-	1
236746	P.W.B. ass'y (GE120 , D)	KMI - 077 ~ 079 (1)	1	-	-
236747	// (US , CA)	// (2)	1	-	-
236748	// (GE230 , FR , SI , EG , CE , AU)	// (3)	1	-	-
236764	// (GE120 , D)	// (4)	-	1	-
236765	// (US , CA)	// (5)	-	1	-
236766	// (GE230 , FR , SI , EG , CE , AU)	// (6)	-	1	-
236780	// (GE120 , D)	// (7)	-	-	1
236781	// (US , CA)	// (8)	-	-	1

Code No.	Name		Pieces		
			W	S	R
236782	P.W.B. ass'y (GE230, FR, SI, EG, CE, AU)	KMI - 077 ~ 079 (9)	-	-	1
935280	PRESS Cable	KMBB - 0063	1	1	-
935285	WHEEL cable	KMBB - 0064	1	1	-
935290	Power supply cable (A)	KMBB - 0065	1	1	-
935931	//	KMBB - 0085	-	-	1
935295	Power supply cable (B)	KMBB - 0066	1	1	-
935935	//	KMBB - 0086	-	-	1
935300	FDD power supply cable	KMBB - 0067	1	1	-
935940	//	KMBB - 0087	-	-	1
935305	EL cable	KMBB - 0068	1	1	-
935945	//	KMBB - 0088	-	-	1
935310	Power supply switch cable	KMBB - 0069	1	1	-
935950	//	KMBB - 0089	-	-	1
935315	INLET cable	KMBB - 0070	1	1	-
935955	//	KMBB - 0090	-	-	1
935320	Grand cable (1)	KMBB - 0071	1	1	-
935415	VOLUME cable	KMBB - 0098	-	2	-
935920	//	KMBB - 0081	-	-	1
935600	Panel cable (B)	KMBB - 0095	-	1	-
935915	Panal cable (A)	KMBB - 0076	-	-	1
811805	Volume (11 click)	PK163110	-	2	-
936210	Ground cable	KMBB - 0080	-	-	1

P.W.B. KMI-062 Ass'y

Code No.	Name		Pieces		
			W	S	R
236742	IC	KP172 (FLASH ROM)	1	-	-
236760	//	KP175 (//)	-	1	-
236743	//	KP173 (//)	1	-	-
236761	//	KP176 (//)	-	1	-
263777	//	KP182 (//)	-	-	1
236778	//	KP183 (//)	-	-	1
804056	//	HD74HC 245FP - EL ; TP	1	1	1
805154	//	HD74HC 74FP - EL ; TP	2	2	2
805155	//	HD74HC 138FP - EL ; TP	1	1	-
807020	//	HD63266F ; TR	1	1	1
807657	//	K015FP (MB89035PF ; TR)	2	1	1
807873	//	TC74HC U04AF - TP1 ; TP	1	1	1
808618	//	K016FP (MB87822PF ; TR)	3	2	2
809360	//	K018FP (MBCE31701 - 020PF)	1	1	1
809523	//	MN19412 (A) ; TR	3	3	3
810709	//	K019 - FP (RF5C345)	1	1	-
811095	//	LC35256AM - 70 - TLM	2	2	2
811479	//	MB91103PF - G - BND	1	1	1

Code No.	Name		Pieces		
			W	S	R
811481	IC	LC7527E	1	1	1
811484	//	PCM69AU - 005	2	2	2
811486	//	M66220FP	2	1	1
811489	//	HN514260CJ - 7	1	1	1
811490	//	MSM514256B - 70JS	6	6	6
811535	//	HD74HC367FP - EL;TP	1	1	1
811645	//	PST575CMT	1	1	1
811649	//	TC74HC00AF - TP1 ; TP	1	1	1
811650	//	TC74HC32AF - TP1 ; TP	1	1	1
811651	//	TC74HC139AF - TP1	3	3	3
811652	//	TC74HC4053AF - TP1	2	2	2
811653	//	M5218AFP - 600C ; TP	4	4	4
811654	//	HA17358F - TL ; TP	1	1	1
811655	//	TA78L05F - TE12L ; TP	1	1	1
811656	//	TA79L05F - TE12L ; TP	1	1	1
811789	//	MSM511664B - 80JS	1	1	1
834870	//	KP167 (LH5332P00AN)	1	-	-
934875	//	KP168 (LH5332P00AN)	1	-	-
935340	//	KP169 (PD23C32000GX)	1	-	-
935345	//	KP170 (PD23C32000GX)	1	1	1
935420	//	KP174 (PD23C8000XGX - 321)	-	1	1
810819	Crystal resonator	SMD - 49 16.9344MHZ	1	1	1
811624	Oscillator	DSO - 49SJ 40MHZ	1	1	1
810836	Ceramic resonator	CSACS 12.0 MT - TC	1	1	-
811493	//	CSACS 20.00 MX040 - TC	1	1	1
811494	//	CSACS 16.00MX040 - TC	1	1	1
808945	Chip bead	BK2125HS601 - T	7	7	7
809000	Chip fixed resistor	MCR10EZHJ0R0	82	98	74
809025	//	MCR10EZHJ101	39	39	15
809037	//	MCR10EZHJ102	40	43	37
809041	//	MCR10EZHJ222	6	6	6
809045	//	MCR10EZHJ472	11	11	11
809047	//	MCR10EZHJ682	1	1	1
809049	//	MCR10EZHJ103	41	45	28
809073	//	MCR10EZHJ105	2	2	1
811771	//	RK73H2ATD1001F	2	2	1
809074	Chip ceramic capacitor	MCH215SL050JK	4	4	4
809075	//	UMK212CH100DQ	1	1	1
809079	//	MCH215SL220JK	4	4	4
809091	//	MCH215SL221JK	2	2	2

Code No.	Name		Pieces		
			W	S	R
809099	Chip ceramic capacitor	MCH212F104ZK	72	72	71
809840	//	UMK212CH101JQ	6	6	6
809843	//	UMK212B222KQ	2	2	2
810159	//	MCH215C223JK	2	2	2
810820	//	MCH215SL300JK	4	4	2
811687	//	TMK212B122K	2	2	2
811689	//	TMK212B272K	2	2	2
811691	//	TMK212B562K	4	4	4
811693	//	TMK212B822K	2	2	2
811694	//	TMK212B123K	2	2	2
811695	//	TMK212B153K	2	2	2
811696	//	TMK212B333K	2	2	2
811697	//	TMK212B683K	2	2	2
811698	//	EMK212BJ154K	2	2	2
811700	//	EMK212BJ334K	2	2	2
811702	//	EMK316BJ684K	2	2	2
811703	//	EMK212F105Z	4	4	4
811742	//	UMK212SL820K	2	2	2
811744	//	LMK316F106Z	13	13	13
811646	Chip inductor	LK2125 R56K - T	1	1	1
811647	//	LK2125 1R0K - T	2	2	2
808941	Electrolytic capacitor	MV16V47 (M) F55 (6.3)	2	2	2
811811	//	MV16VC10 (M) B55	4	4	4
804571	Connector	B4B - PH - K - S	1	1	-
804573	//	B7B - PH - K - S	1	1	-
811642	//	7620 - 6002 FL	1	1	1
811669	//	1 - 215079 - 6	2	2	-
811740	//	7634 - 6002 FL	1	1	1
811741	//	5483 - 06AX	1	1	1
811851	//	3 - 177986 - 2	1	1	1
806001	Wire trap	52147 - 1510	1	1	-
807447	//	52147 - 1410	1	1	1
807645	//	52147 - 0610	1	1	1
935325	Printed wiring board	KMI - 062	1	1	1
805009	Connector	IL - S - 10P - S2T2 - EF	-	1	-
805014	//	IL - S - 15P - S2T2 - EF	-	-	1

P.W.B.KMI - 064 ~ 70 (W Type),081 ~ 089(S Type),091 ~ 096(R Type)ASS'Y

Code No.	Name		Pieces		
			W	S	R
805043	IC	TA75358 CP	1	1	-
805133	//	TC74HC 573	2	1	1
803995	//	TC74HC 4051 AP	-	4	-
800625	Diode	1SS133	66	55	39
802050	Resistor array	RGLD 8 × 103J	1	1	1
801037	Carbon resistor	AT R20 J 101	2	2	-
801045	//	AT R20 J 471	2	-	-
801050	//	AT R20 J 122	3	3	-
801057	//	AT R20 J 472	1	1	-
801061	//	AT R20 J 103	6	8	1
801073	//	AT R20 J 104	1	1	-
801043	//	AT R20 J 331	-	4	2
801049	//	AT R20 J 102	-	2	-
808752	Ceramic capacitor	AT EP050F 473Z	3	8	1
809252	//	AT UP050B 102K	3	3	3
806397	Electolytic capacitor	RC3 50V 1 μ F	2	2	-
811772	//	UMA0G101MDA 4V/5MM	1	1	-
811657	LED	LT3E43B	1	-	-
808804	//	LT3D43B	1	4	-
810612	//	LT1D21A	-	-	2
808345	Tact switch	SOR - 123HS	64	53	39
805764	Coil	SBT - 0160W	2	2	2
802077	Trimmer resistor	4.7KB KVSF 637A	1	1	-
811745	//	471B KVSF 637A	1	1	-
811594	Volume	RS45112AC 10KB × 2 (Slide)	2	2	-
811912	//	RK09L12B0 10KB (with N / W)	-	-	2
711082	Connector	171826 - 4	1	1	-
805014	//	IL - S - 15P - S2T2 - EF	-	-	1
806173	Flat cable	12 × 140 (P2.0)	1	-	-
808258	//	15 × 150 (P2.0)	1	-	-
808886	//	15 × 170 (P2.0)	1	1	-
811071	//	3 × 110 (P2.0)	1	1	-
811736	//	12 × 230 (P2.0)	1	1	-
811806	//	6 × 420 (P2.0)	-	1	-
811944	//	14 × 180 (P2.0)	-	1	-
809301	//	12 × 350 (P2.0)	-	-	1
806419	//	4 × 90(P2.0)	-	-	1
811957	//	3 × 90(P2.0)	-	-	2
806003	Cable holder	51048 - 0300	2	2	2
806004	//	51048 - 0400	-	-	1

Code No.	Name		Pieces		
			W	S	R
806005	Cable holder	51048 - 1200	3	1	1
806669	//	51048 - 1500	3	1	-
806241	//	51048 - 0600	-	2	-
807449	//	51048 - 1400	-	2	-
803439	Jack	YKB21 - 5074	1	1	1
803034	//	YKB21 - 5012	-	2	-
804571	Cnnector	B4B - PH - K - S	1	1	-
804576	//	B12B - PH - K - S	-	-	1
805071	//	B3B - PH - K - S	1	1	1
805637	//	S3B - PH - K - S	-	2	-
811848	Connector base	IL - S - 10P - S2L2 - EF	-	1	-
811761	Encoder	EC16B242042CA(with N/W)	1	1	-
811939	//	EC16B24204(with N/W)	-	-	1
811730	Earth cable	1007 #18 Black 50 5 - T (3)	1	1	-
935100	Headphone fix metal	KMFB - 0074	1	1	-
935900	//	KMFB - 0085	-	-	1
934965	Jack fix metal (2)	KSFB - 0060	-	1	-
935430	Volume fix metal	KMFB - 0080	-	1	-
935330	Printed wiring board	KMI - 064 ~ 070	1	-	-
935425	//	KMI - 081 ~ 089	-	1	-
935895	//	KMI - 091 ~ 096	-	-	1
805850	Digital Transistor	DTA143ES	-	4	-
810851	//	DTC143ES	-	1	-
811844	Volume	RK11K 114 KZVB - 0107 with N/W	-	18	-
809406	Wire trap	52151 - 0410	-	1	-
805998	//	52147 - 0310	-	-	2
805999	//	52147 - 0410	-	-	1
806000	//	52147 - 1210	-	-	1

P.W.B.KMI - 077 ~ 079 ASS'Y

Code No.	Name		Pieces		
			W	S	R
800676	IC	M5218AP	2	2	2
801861	//	M5216P	2	2	2
806719	//	PC900V	2	1	1
811487	//	M5291P	1	1	1
811660	//	PC78M12AHF	1	1	1
811661	//	PC79M12HF	1	1	1
811589	Transistor	2SA1641S (T)	1	1	1
811590	//	2SD1246S (T)	1	1	1
805984	//	2SD1468SR	6	6	6
807661	//	2SC1815Y	1	1	1

Code No.	Name		Pieces		
			W	S	R
810851	Digital transistor	DTC143ES	10	6	6
811758	//	DTB113ZS	1	1	1
811759	Posistor	PTH8L05BA1R8M1B550	1	1	1
811951	//	PTH8L07BD100N2B550	1	1	-
808952	Diode	DBF40B	1	1	1
800625	//	1SS133	8	7	7
805852	//	1SR139 - 400YT - 32	5	5	5
811658	//	SB20 - 04A	1	1	1
803591	Zener diode	HZS - 2BLL	1	1	1
809243	//	GZB - 6.2 C / B	1	1	1
800766	Metal oxide film resistor	CRB 20 FX 1001	1	1	1
809432	//	CRB 20 FX 3301	1	1	1
811753	Flame retardant resistor	RDF50SS271J	1	1	1
811767	//	RDF50SS101J	4	4	4
801037	Carbon resistor	AT R20 J 101	6	4	4
801041	//	AT R20 J 221	8	4	4
801049	//	AT R20 J 102	4	3	1
801053	//	AT R20 J 222	1	1	1
801057	//	AT R20 J 472	10	7	7
801061	//	AT R20 J 103	11	11	10
801065	//	AT R20 J 223	6	6	6
804862	//	AT R25 G 102	10	10	10
707333	Electrolytic capacitor	25V 1000μF	2	2	2
804455	//	25V 4700μF	1	1	1
805923	//	16V 10μF	2	2	2
805992	Electrolytic capacitor	6.3V 1000μF	2	2	2
808738	//	25V 470μF	1	1	1
811808	//	4.7μF 25V (105℃)	2	2	2
811809	//	100μF 16V (105℃)	2	2	2
802799	//	BP16V 10μF	8	8	8
807557	Film capacitor	50VJ 223	3	3	3
808752	Ceramic capacitor	AT EP050 F 473Z	5	4	1
808957	//	AT UP050 B 471K	1	1	1
809245	//	AT UP050 B 151K	2	2	2
809252	//	AT UP050 B 102K	8	12	8
809904	//	AT UP050 SL 470J	4	4	4
802576	Jack	YKB21 - 5006	2	2	2
803034	//	YKB21 - 5012	2	2	2
803439	//	YKB21 - 5074	2	2	-
805736	MIDI connector	YKF51- 5046	2	1	1
802906	Connector	B4P - VH	1	1	1

Code No.	Name		Pieces		
			W	S	R
803428	Cnnector	B3P - VH	1	1	1
805071	//	B3B - PH - K - S	1	1	1
810837	//	5483 - 04AX	2	2	2
811739	//	5483 - 03AX	1	1	1
811741	//	5483 - 06AX	1	1	1
804576	//	B12B - PH - K - S	-	-	1
806000	Wire trap	52147 - 1210	1	1	-
806241	Cable holder	51048 - 0600	1	1	1
806004	//	51048 - 0400	-	1	-
807449	//	51048 - 1400	1	1	1
811737	Flat cable	6 × 100(P2.0)	1	1	-
812035	//	14 × 70(P2.0)	1	1	-
811807	//	4 × 30(P2.0)	-	1	-
811955	//	6 × 290(P2.0)	-	-	1
811956	//	14 × 270(P2.0)	-	-	1
804831	EMI coil	SU10VD - 10010	1	1	1
809305	Toroidal coil	SKP2 - 50	1	1	1
810263	Spiral cable	1015 #18 75 5 - T	1	1	1
811659	Tansformer	S147948	1	1	1
811760	Bead core	BP53RA030010040M	1	1	1
808964	Fuse crip	H - 0060	2	2	2
811709	IC protector	ICP - N25	1	1	1
811711	Capacitor	DE16101E472MKX	2	2	2
811754	//	DE09101E102MKX	2	2	2
934965	Jack fix metal (2)	KSFB - 0060	1	1	1
935090	// (4)	KMFB - 0072	1	1	1
935435	Printed wiring board fix metal	KMFB - 0079	-	1	1
935335	Printed wiring board	KMI - 077 ~ 079	1	1	1
711086	Connector	171825 - 4	1	1	1
711757	Fuse (GE230 , FR ,SI , EG , CE)	SET 0.16A 250V	1	1	1
811755	// (GE120 , D)	(A) TSC 0.5A 125V	1	1	1
811756	// (US , CA)	(UL) TSC 0.5A 125V	1	1	1

2. OPENING PROCEDURE(W type)

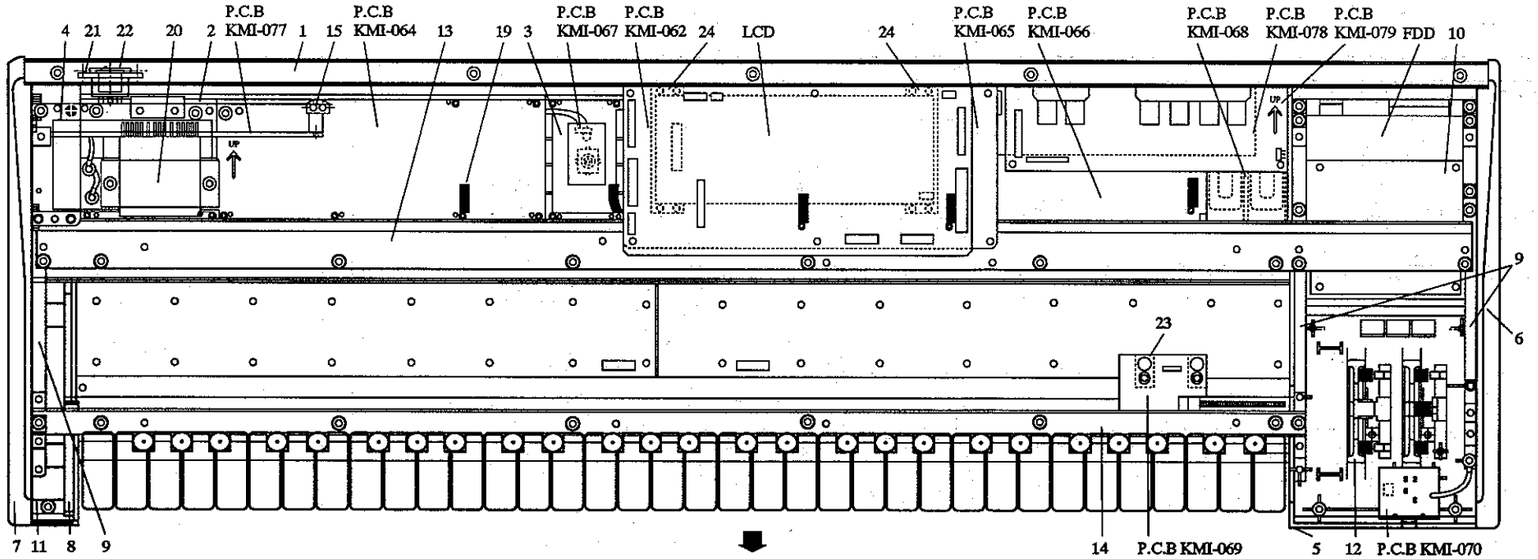

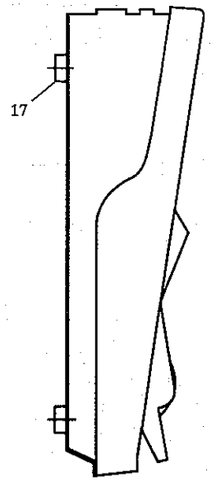

No.	Code No.	Name		Pieces	No.	Code No.	Name		Pieces
1	935395	Panel	KMFB-0060	1	14	935060	Metal for fromt of keyboard	KMFB-0065	1
2	935065	Metal for transformer	KMFB-0066	1	15	935095	Metal for power supply P.C.B.	KMFB-0073	1
3	935080	Metal for encoder	KMFB-0070	1	16	935045	Metal for base	KMFB-0076	1
4	811632	Insulation sheet	KMFD-0059	1	17	811635	Leg	PL-10	4
5	811625	End block	KMFD-0061	1	18	935410	Base lid	KMFB-0077	1
6	811626	Side block (L)	KMFD-0053	1	19	811733	Cable bind	T18MR	5
7	811627	Side block (R)	KMFD-0054	1	20	811648	Transformer	KT-010	1
8	811628	Side block cover	KMFD-0055	1	21	811643	AC inlet	AC-P01CF01	1
9	935050	Metal for side block (R)	KMFB-0083	2	22	811534	Switch	EST206B	1
	935051	Metal for side block (L)	KMFB-0083	1	23	910030	Metal for P.C.B.	EPFB-1008	2
10	935070	Metal for FDD	KMFB-0067	1	24	935085	Metal for LCD (R)	KMFB-0071	1
11	935150	Reinforcement for side block	KMFB-0082	1		935086	Metal for LCD (L)	KMFB-0071	1
12		wheel ass'y		2	25	811849	Partition sheet	KMFB-0072	1
13	935055	Metal for rear of keyboard	KMFB-0064	1					

3. OPENING PROCEDURE(S type)

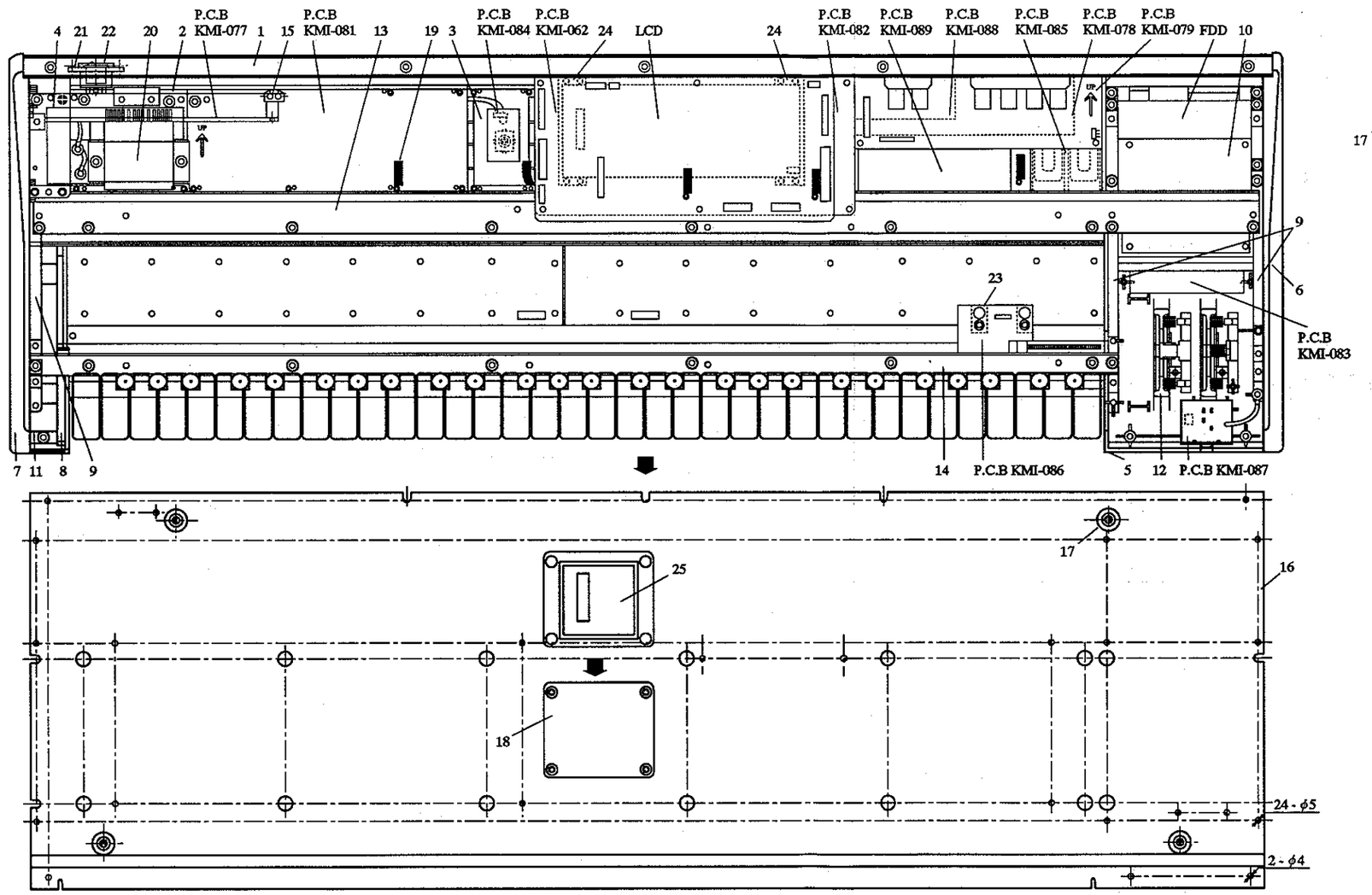

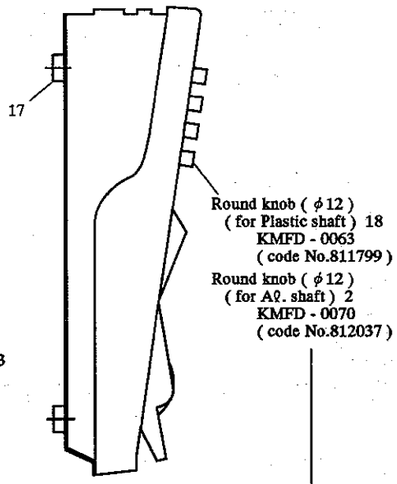

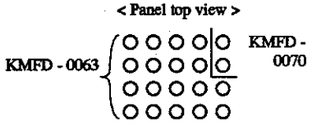

No.	Code No.	Name		Pieces	No.	Code No.	Name		Pieces
1	935395	Panel	KMFB-0061	1	14	935060	Metal for fromt of keyboard	KMFB-0065	1
2	935065	Metal for transformer	KMFB-0066	1	15	935095	Metal for power supply P.C.B.	KMFB-0073	1
3	935080	Metal for encoder	KMFB-0070	1	16	935045	Metal for base	KMFB-0076	1
4	811632	Insulation sheet	KMFD-0059	1	17	811635	Leg	PL-10	4
5	811625	End block	KMFD-0061	1	18	935410	Base lid	KMFB-0077	1
6	811626	Side block (L)	KMFD-0053	1	19	811733	Cable bind	T18MR	5
7	811627	Side block (R)	KMFD-0054	1	20	811648	Transformer	KT-010	1
8	811628	Side block cover	KMFD-0055	1	21	811643	AC inlet	AC-P01CF01	1
9	935050	Metal for side block (R)	KMFB-0083	2	22	811534	Switch	EST206B	1
	935051	Metal for side block (L)	KMFB-0083	1	23	910030	Metal for P.C.B.	EPFB-1008	2
10	935070	Metal for FDD	KMFB-0067	1	24	935085	Metal for LCD (R)	KMFB-0071	1
11	935150	Reinforcement for side block	KMFB-0082	1		935086	Metal for LCD (L)	KMFB-0071	1
12		wheel ass'y		2	25	811849	Partition sheet	KMFB-0072	1
13	935055	Metal for rear of keyboard	KMFB-0064	1					

4. OPENING PROCEDURE(R type)

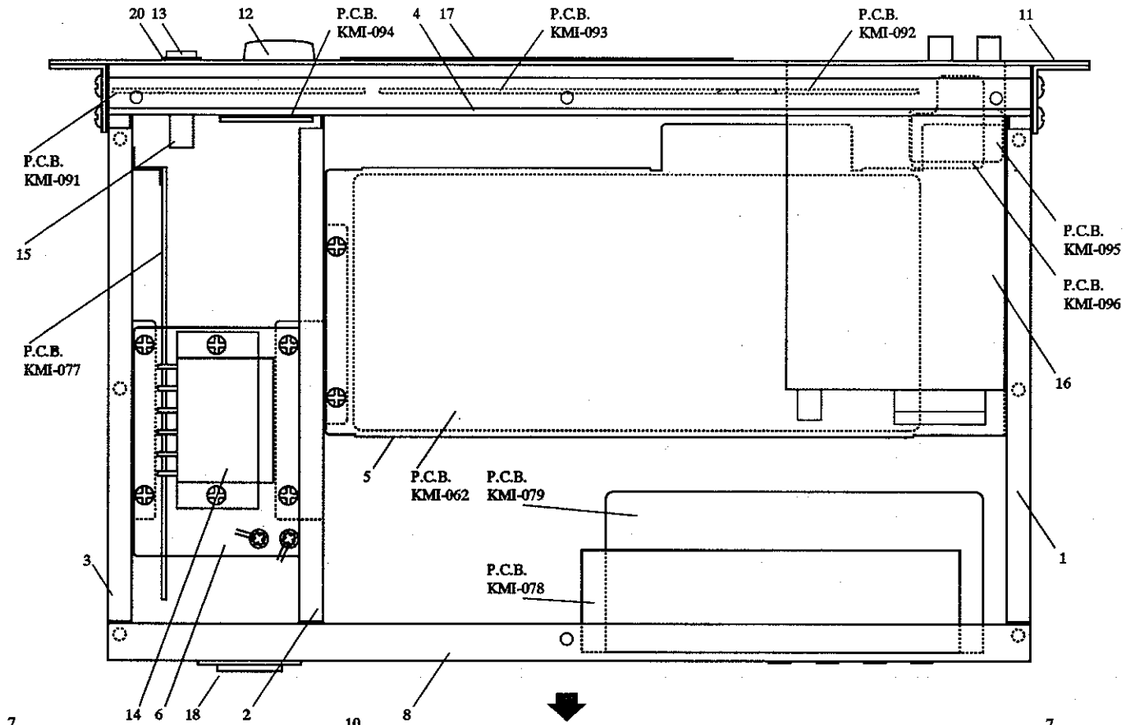

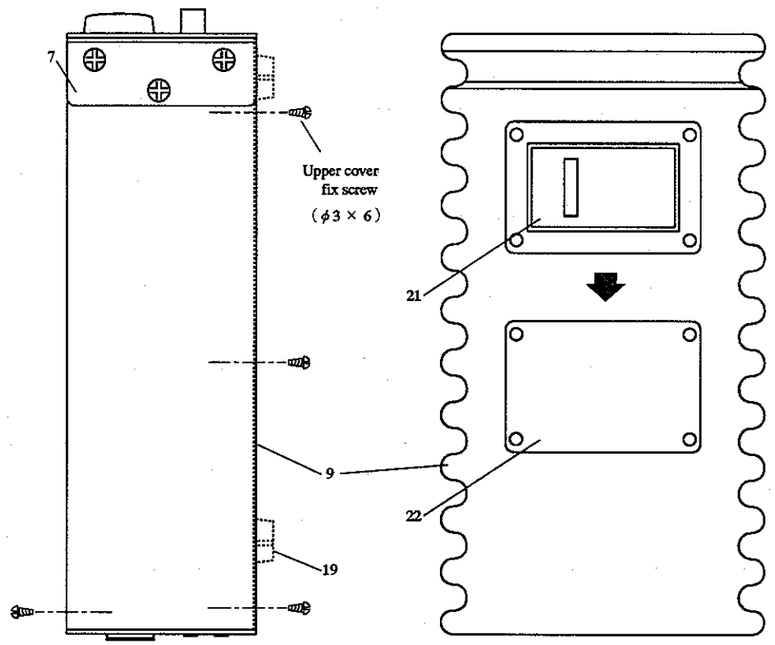

No.	Code No.	Name		Pieces
1	935825	Rib (L)	KMFB - 0099	1
2	935830	Rib (C)	KMFB - 0087	1
3	935835	Rib (R)	KMFB - 0098	1
4	935840	Front chassis	KMFB - 0089	1
5	935845	Metal for main P.C.B.	KMFB - 0090	1
6	935850	Metal for transformer	KMFB - 0091	1
7	935855	Reinforcement for panel	KMFB - 0092	2
8	935860	Rear panel	KMFB - 0093	1
9	935865	Metal for base	KMFB - 0076	1
10	935870	Upper cover	KMFB - 0095	1
11	935875	Front panel	KMFB - 0097	1
12	808574	Incrementer knob	KMFD - 0018	1
13	810031	Power switch knob	KMFD - 0008	1
14	811648	Transformer	KT - 010	1
15	811534	Switch	EST206B	1
16	811488	FDD	MF355F - 2252MG	1
17		LCD covre ass'y	KMBN - 0003	1
18	811643	AC inlet	AC - P01CF01	1
19	811901	Case leg	FF - 004 (A)	4
20	811104	Power switch knob guide	KPFD - 0009	1
21	811849	Partition sheet	KMFD - 0072	1
22	935410	Base lid	KMFB - 0077	1

5. BLOCK DIAGRAM(W type)

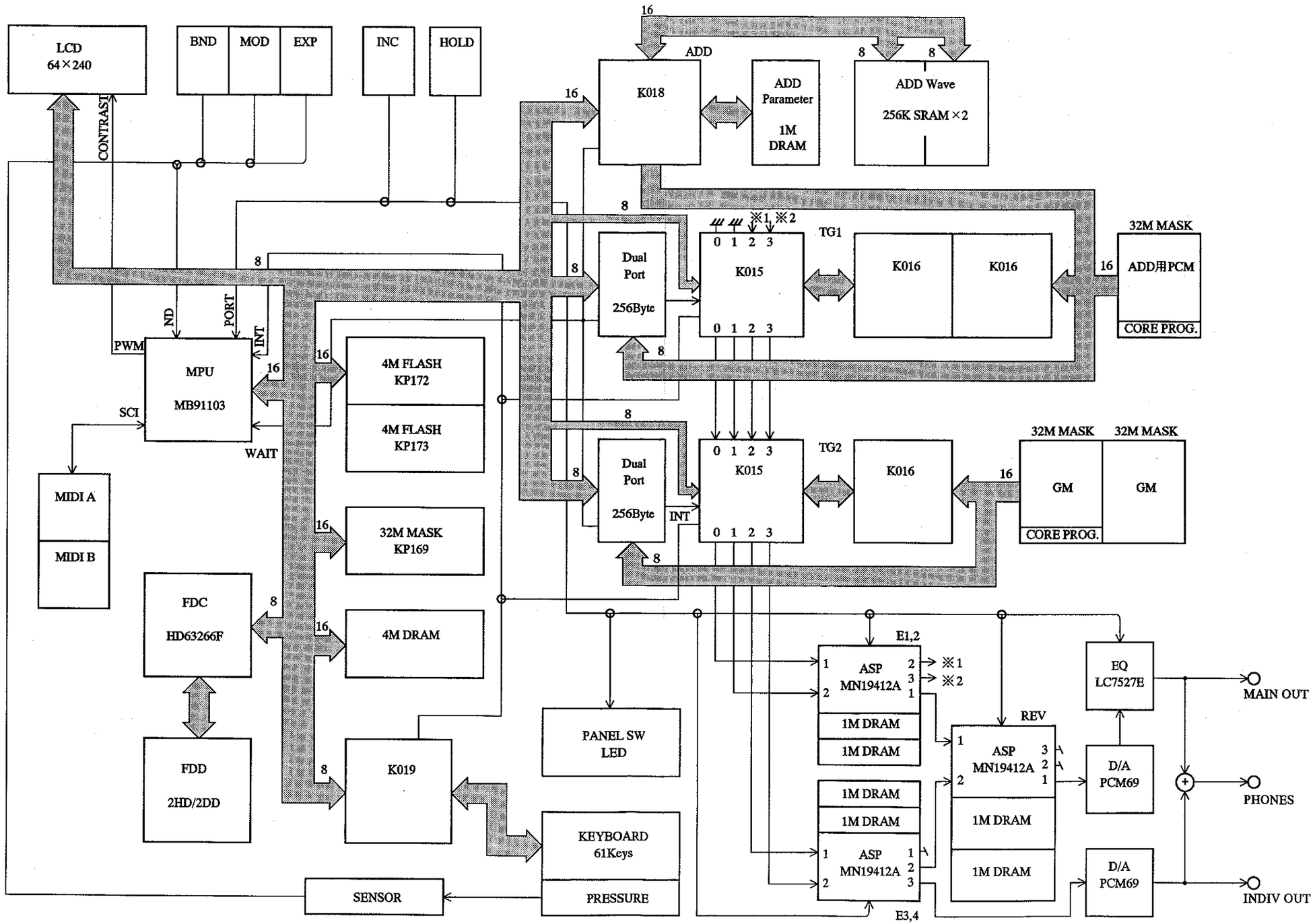

6. BLOCK DIAGRAM(S type)

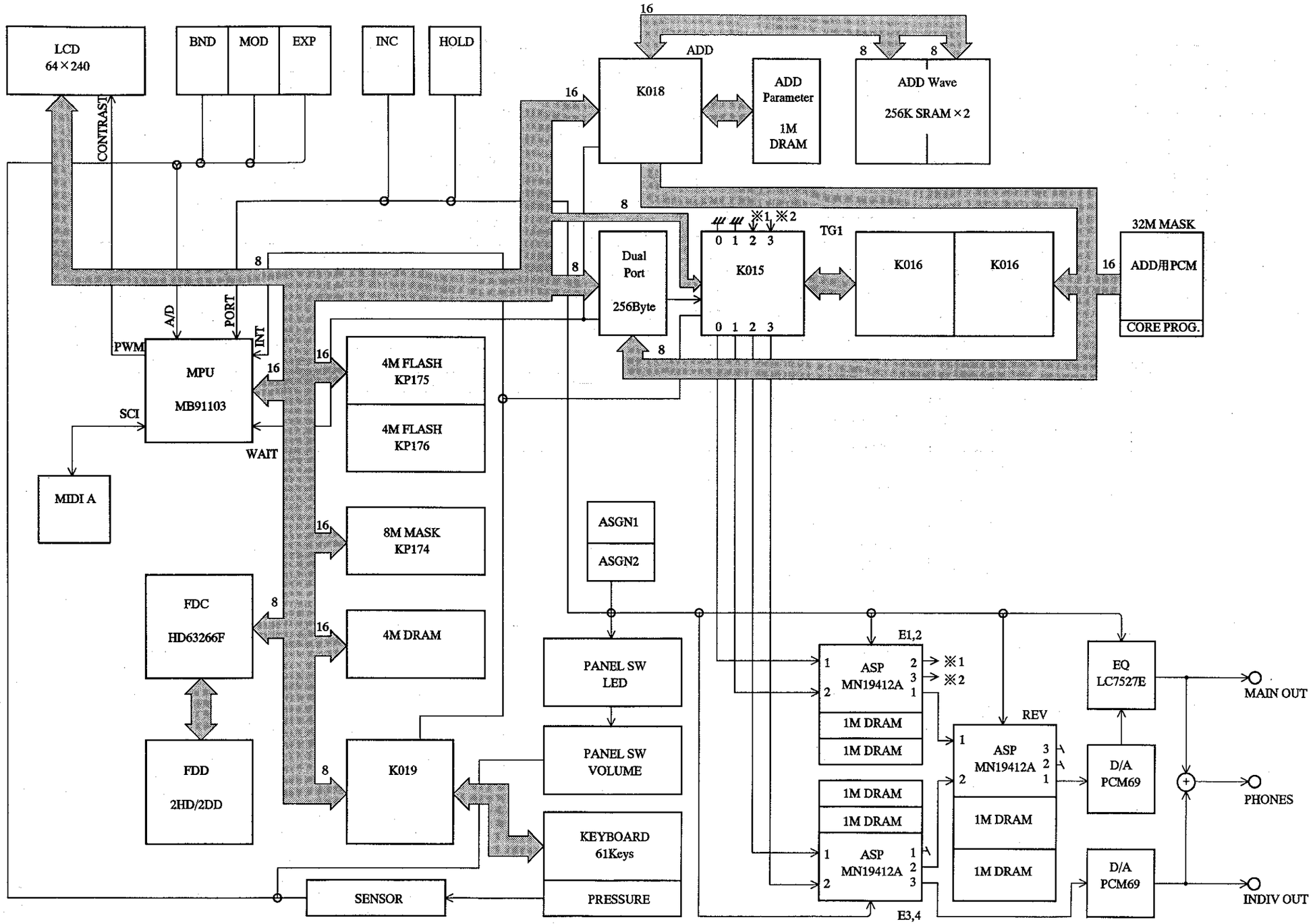

7. BLOCK DIAGRAM(R type)

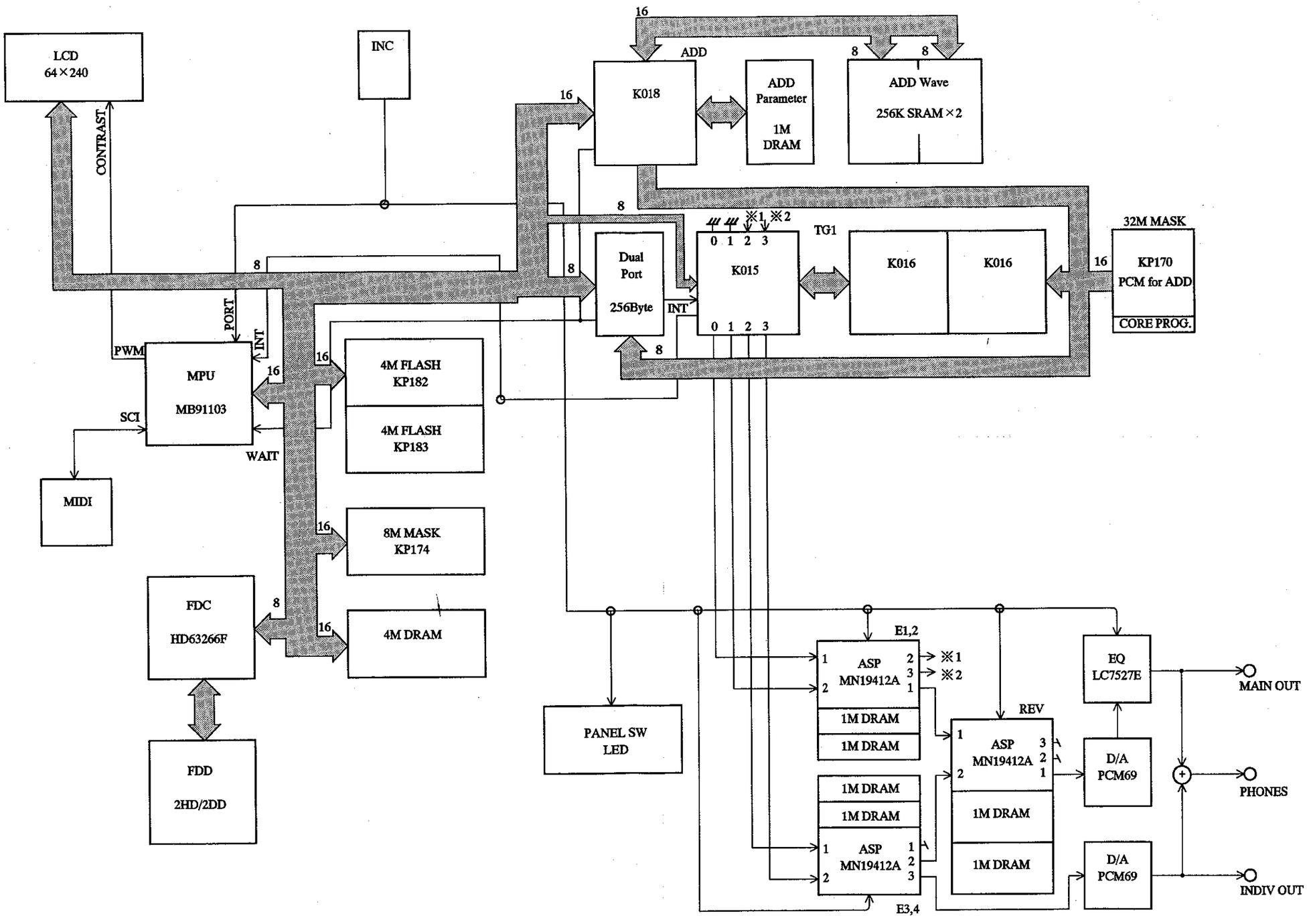

8. WIRING CONNECTION(W type)

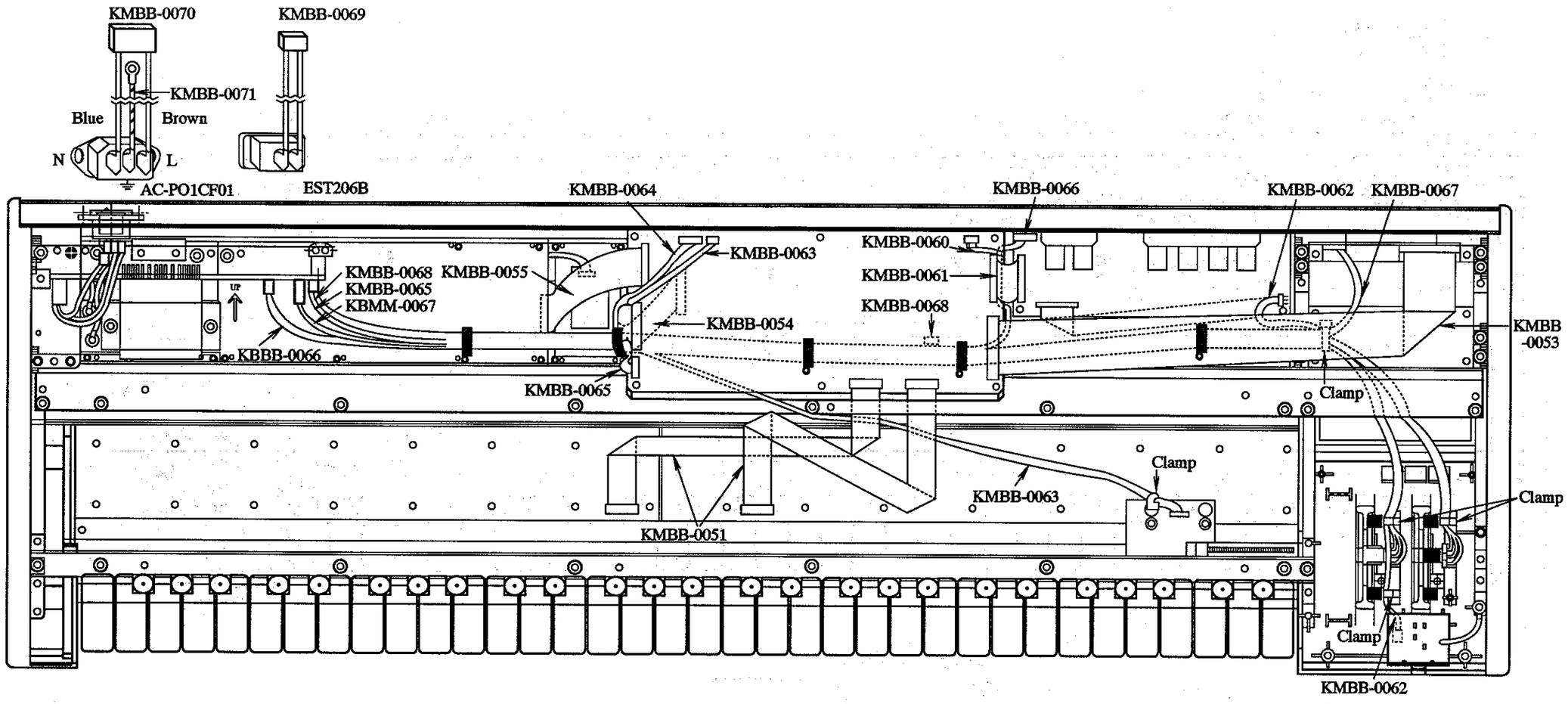

9. WIRING CONNECTION(S type)

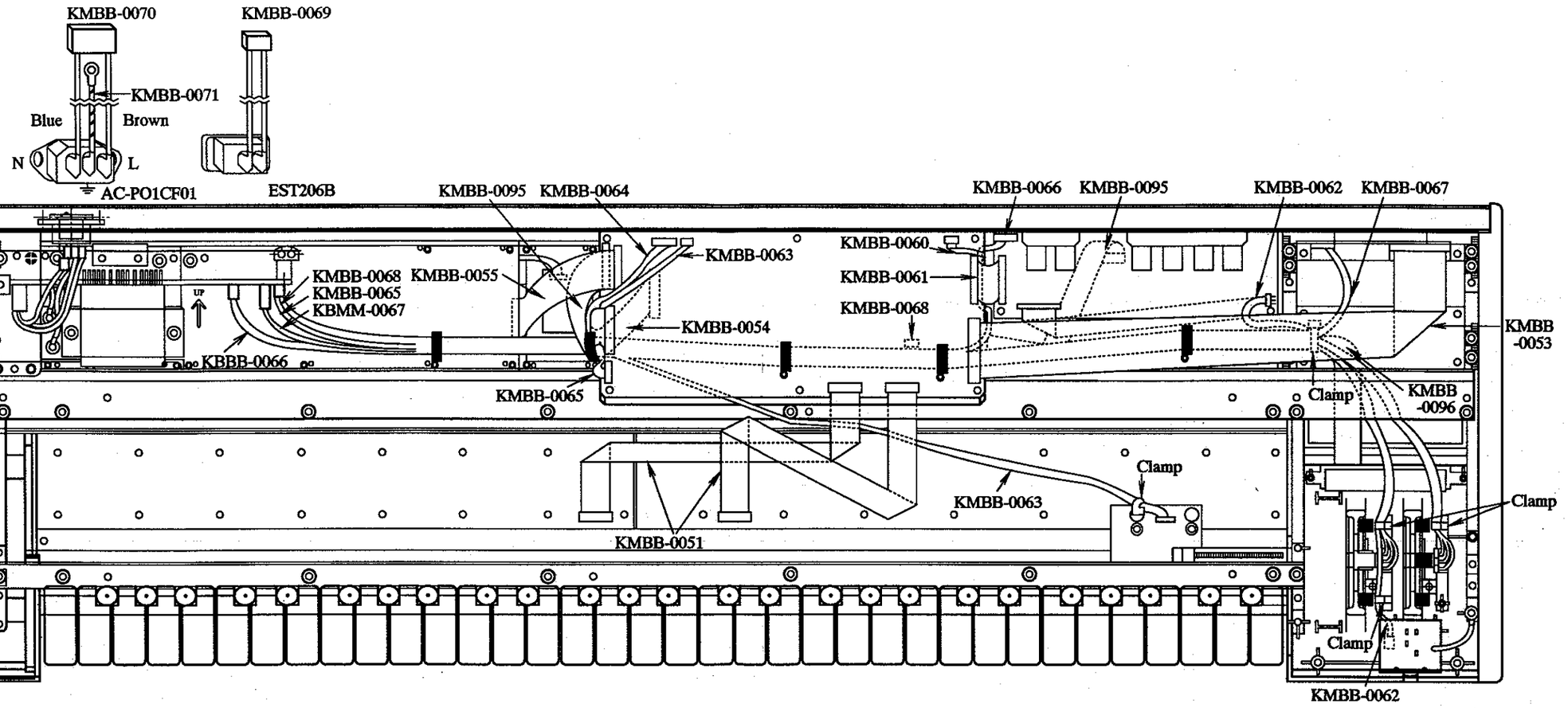

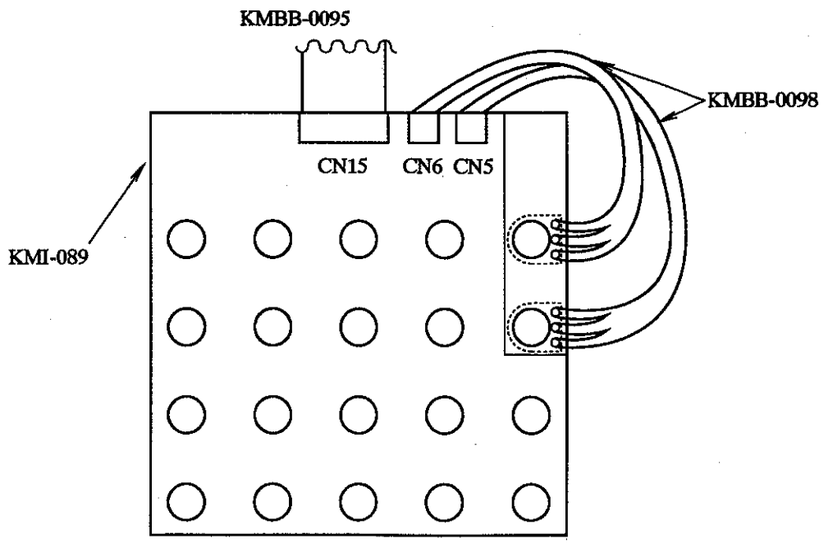

10. WIRING CONNECTION(R type)

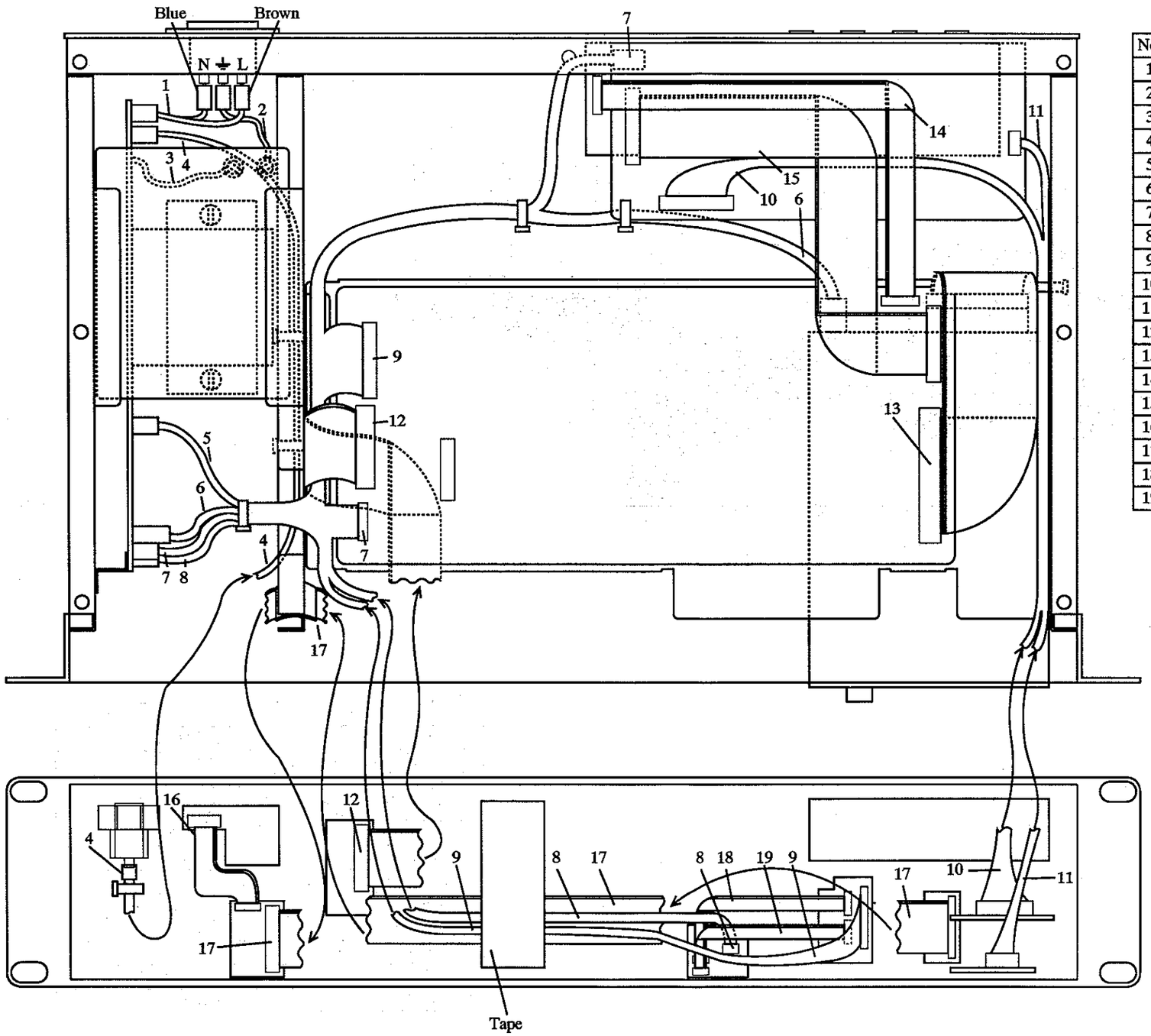

No.	Cable name
1	KMBB-0090
2	KMBB-0080
3	KMBB-0073
4	KMBB-0089
5	KMBB-0086
6	KMBB-0087
7	KMBB-0085
8	KMBB-0088
9	KMBB-0076
10	KMBB-0081
11	KMBB-0084
12	KMBB-0075
13	KMBB-0074
14	KMBB-0082
15	KMBB-0083
16	KMBB-0078
17	KMBB-0079
18	KMBB-0078
19	KMBB-0077

11. KEYBOARD ASSEMBLY(TP / 8S type)

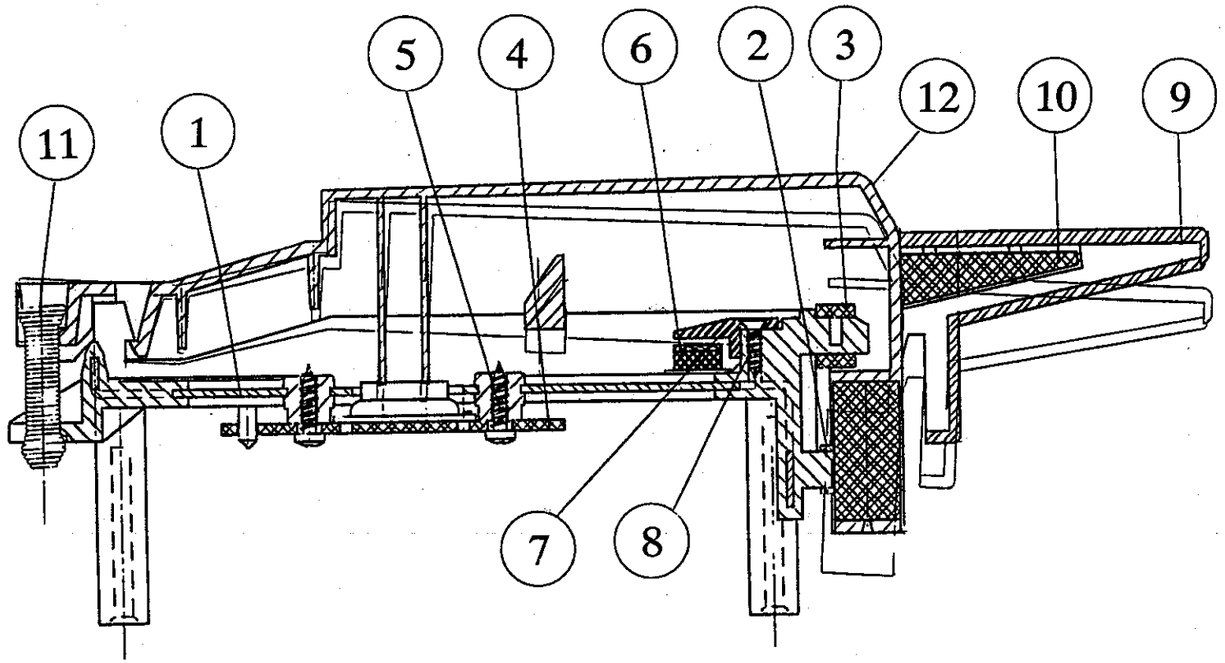

No.	Description	Qty	Code	Remarks
1	Key frame	1	42247820	
2	Rubber bush for white key	36	42363030	
3	Rubber cussion	61	24241010	
4	Key switch PCB with rubber switch (32keys) Key switch PCB with rubber switch (29keys)	1 1	42911930 42911920	DR
5	Screw	34	21231100	ϕ 3 × 9.5mm
6	Strip for after touch	1	42301071	
7	Support plate for after touch	6	42315170	
8	Screw	6	21122020	ϕ2.2 × 9.5mm
9	White key	36	42360560	
10	Weight for white key	36	42365730	
11	Spring	61	23105330	
12	Black key	25	42123440	

12. KMI-062 PRINTED WIRING BOARD

KEYBOARD															
MK4	BR4	MK5	BR5	MK6	BR6	MK7	BR7	T7	T6	T5	T4	T3	T2	T1	T0
1	2	3	4	5	6	7	8	9	10	11	12	13	14	15	16

CN6 (1)(2)

KEYBOARD															
MK0	BR0	MK1	BR1	MK2	BR2	MK3	BR3	T7	T6	T5	T4	T3	T2	T1	T0
1	2	3	4	5	6	7	8	9	10	11	12	13	14	15	16

CN7 (1)(2)

CN5		
1	+5D	POWER
2	+5D	
3	DG	
4	DG	
5	PDOWN	
6	PCONT	

FDD		CN9
DG	1	
HD	2	
DG	3	
NC	4	
DG	5	
NC	6	
DG	7	
INDEX	8	
DG	9	
DRIVE / SELECT0	10	
DG	11	
DRIVE / SELECT1	12	
DG	13	
NC	14	
DG	15	
MOTOR ON	16	
DG	17	
DIRETION SELECT	18	
DG	19	
STEP	20	
DG	21	
WRITE DATA	22	
DG	23	
WRITE GATE	24	
DG	25	
TRACK 00	26	
DG	27	
WRITE PROTECT	28	
DG	29	
READ DATA	30	
DG	31	
SIDE ONE SELECT	32	
DG	33	
DISK CHANGE	34	

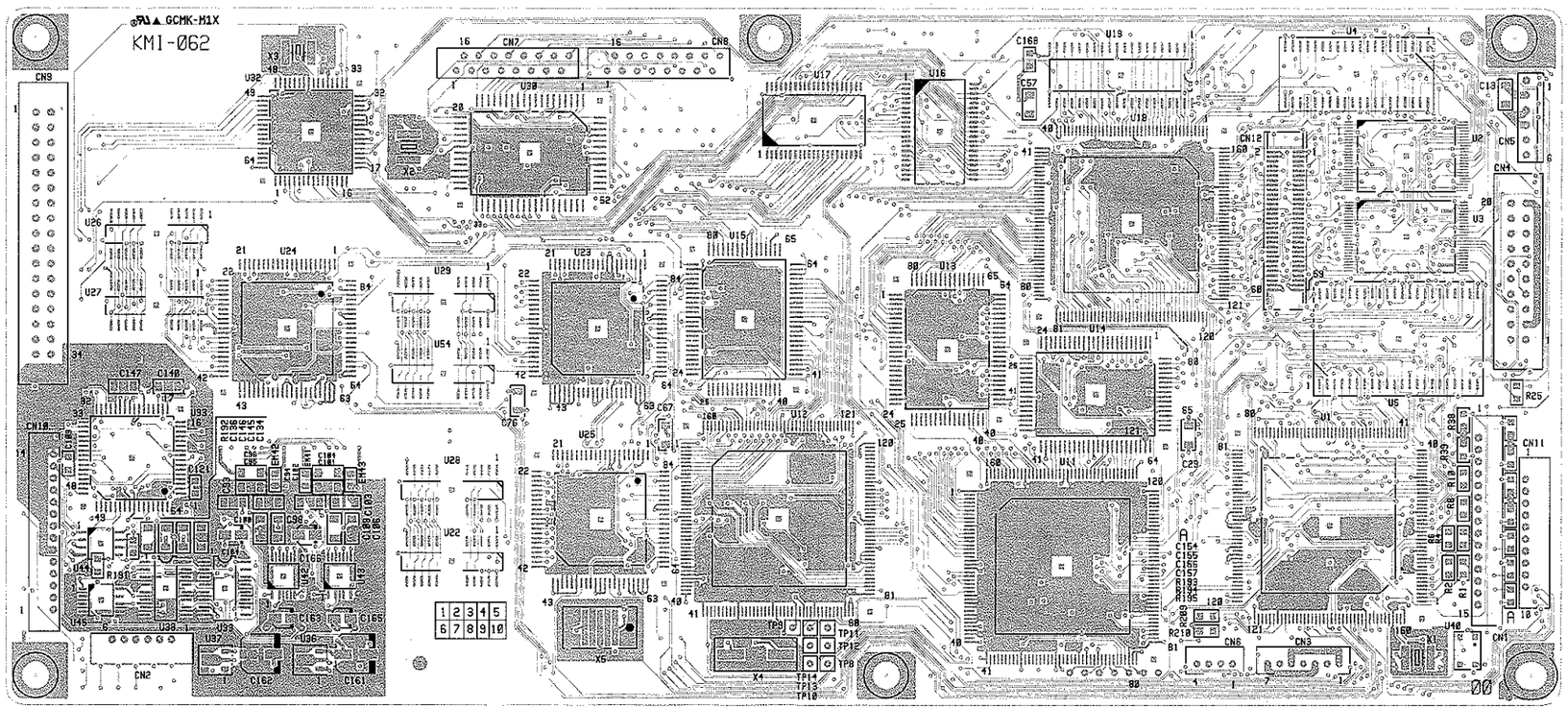

ANALOG		CN10
AG	14	
LINE - L	13	
LINE - R	12	
INDV - L	11	
INDV - R	10	
SEL	9	
+12A	8	
-12A	7	
AG	6	
MUTE	5	
REFH	4	
REFL	3	
EXP	2	
HOLD	1	

CN2					
6	5	4	3	2	1
MIDI IN A	MIDI OUT A	MIDI IN B	MIDI OUT B	+5	GND

MIDI

CN3						
7	6	5	4	3	2	1
GND	BENDER	+5V	+2.5V	GND	MOD.W	+5V

BENDER (1)(2)

CN6				
4	3	2	1	
+12A	PRESS	GND	+5V	

PRESSURE (1)(2)

CN4		LCD
20	NC	
19	FS	
18	DB7	
17	DB6	
16	DB5	
15	DB4	
14	DB3	
13	DB2	
12	DB1	
11	DB0	
10	RESET	
9	NC	
8	C / D	
7	CE	
6	RD	
5	WR	
4	VO	
3	VDD	
2	VSS	
1	FG	

CN11		CONTROLER
1	DG	
2	AN7	
3	AN6	
4	AN5	
5	AN4	
6	PAR2	
7	PAR1	
8	PAR0	
9	+5	
10	DG	

(2)

CN1			PANEL SW
	1	BIN0	
	2	AIN0	
	3	PLE2	
	4	PLE1	
	5	POE	
	6	PD7	
	7	PD6	
	8	PD5	
	9	PD4	
	10	PD3	
	11	PD2	
	12	PD1	
	13	PD0	
	14	GND	
	15	+5D	

CN12			ME-1
	1	+5	
	2	GND	
	3	+5	
	4	GND	
	5	NC	
	6	NC	
	7	NC	
	8	NC	
	9	A19	
	10	A18	
	11	A17	
	12	A16	
	13	A15	
	14	A14	
	15	A13	
	16	A12	
	17	A11	
	18	A10	
	19	A9	
	20	A8	
	21	A7	
	22	A6	
	23	A5	
	24	A4	
	25	A3	
	26	A2	
	27	A1	
	28	NC	
	29	D31	
	30	D30	
	31	D29	
	32	D28	
	33	D27	
	34	D26	
	35	D25	
	36	D24	
	37	D23	
	38	D22	
	39	D21	
	40	D20	
	41	D19	
	42	D18	
	43	D17	
	44	D16	
	45	WE	
	46	RD	
	47	DWIX	
	48	CAS1H	
	49	CAS1L	
	50	RAS1	
	51	CS5X	
	52	P87	
	53	P86	
	54	RY - BY	
	55	- LRES	
	56	NC	
	57	+5	
	58	GND	
	59	+5	
	60	GND	

13. KMI-062 PRINTED WIRING BOARD(Solder side)

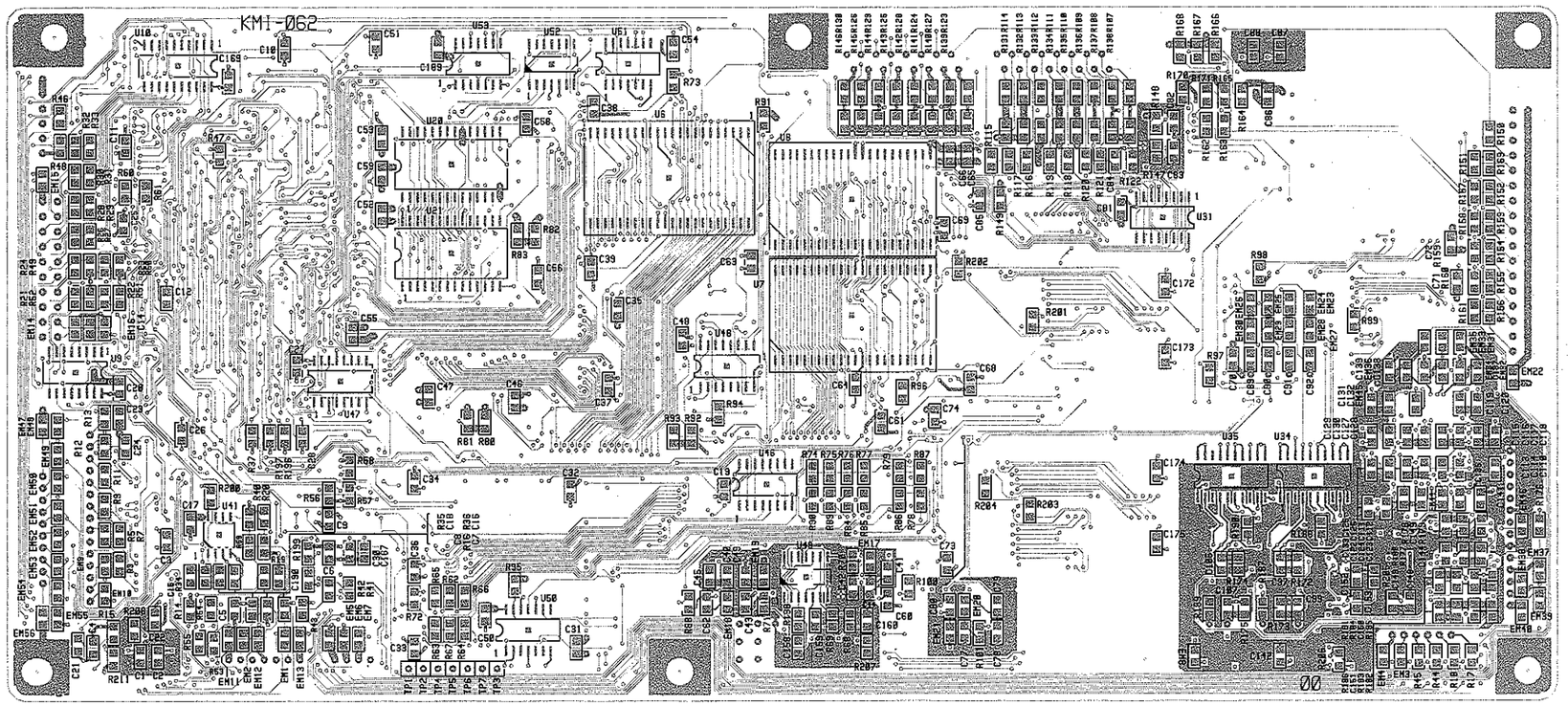

14. KMI-062(1),(2),(3) CIRCUIT (1/8)

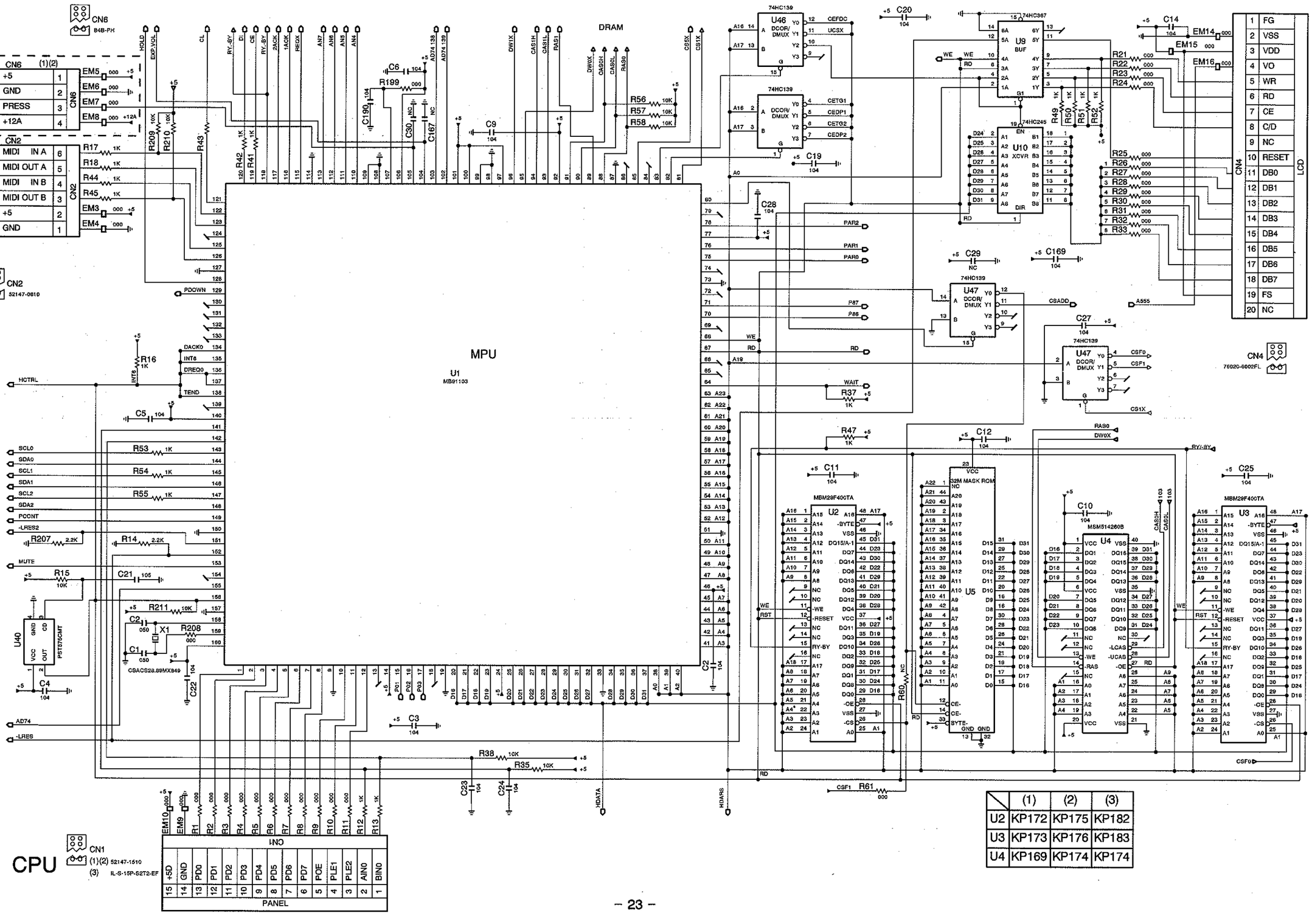

	(1)	(2)	(3)
U2	KP172	KP175	KP182
U3	KP173	KP176	KP183
U4	KP169	KP174	KP174

15. KMI-062(1),(2),(3) CIRCUIT (2/8)

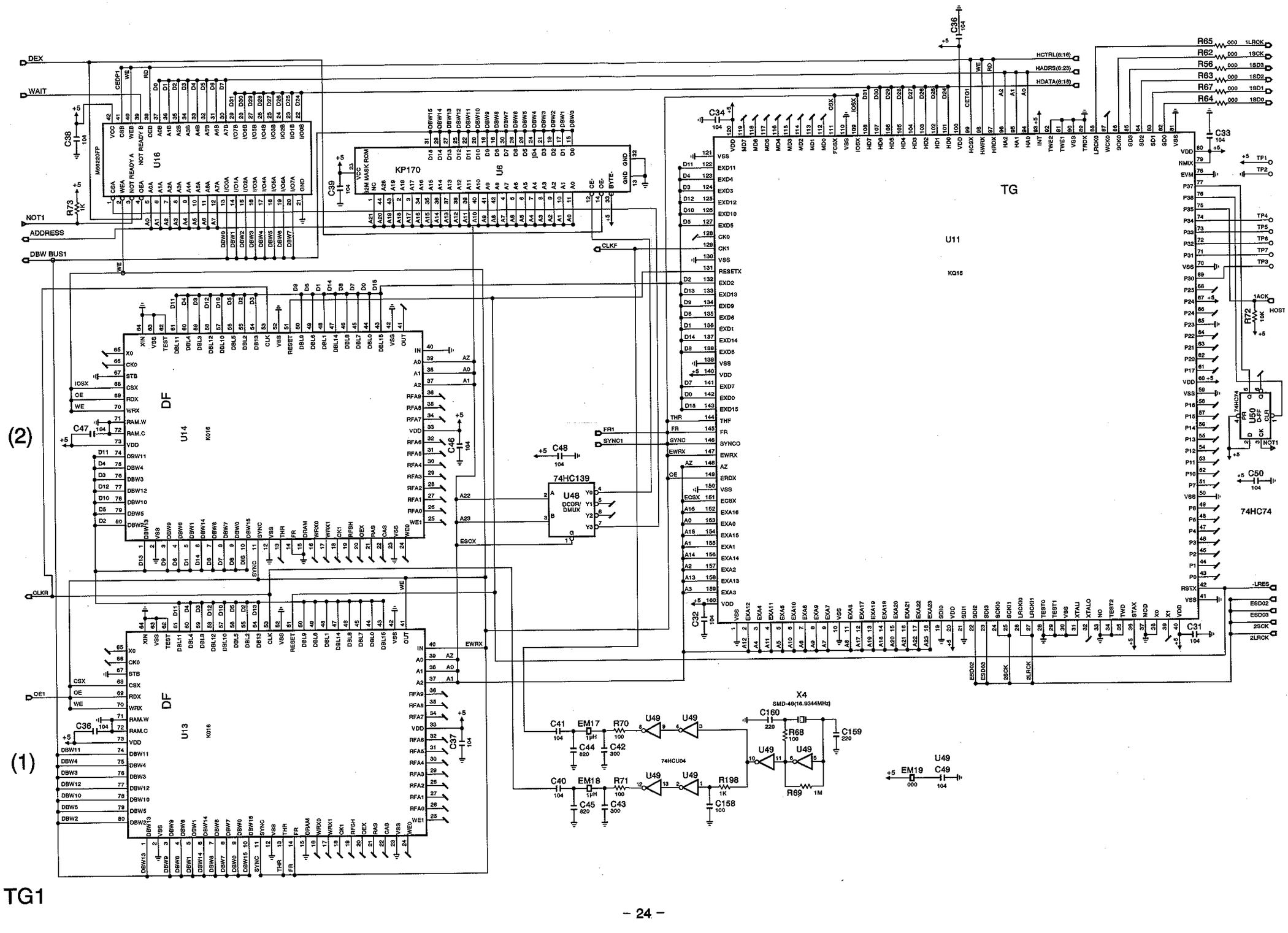

16. KMI-062(1),(2),(3) CIRCUIT (3/8)

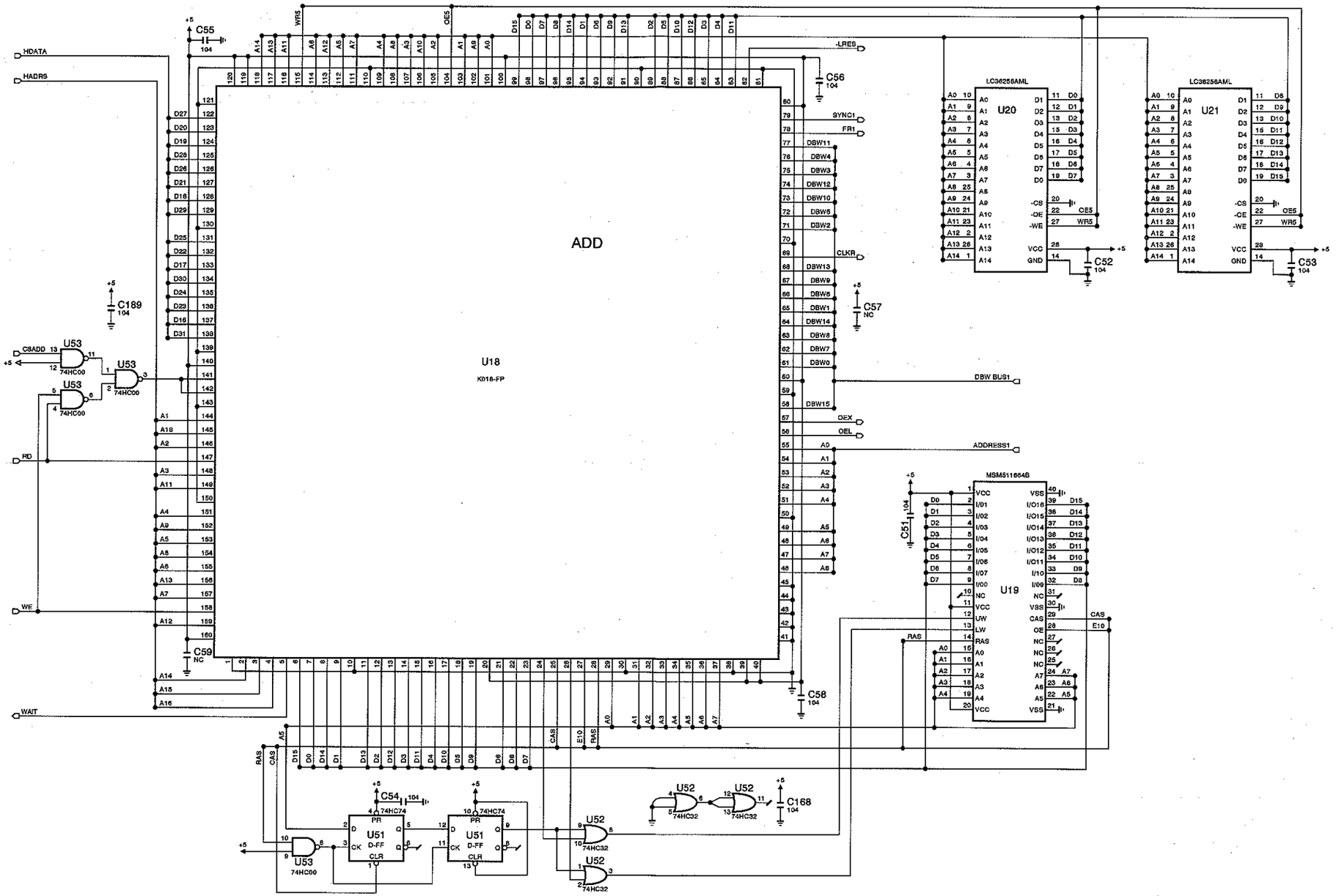

ADD

17. KMI-062(1),(2),(3) CIRCUIT (4/8)

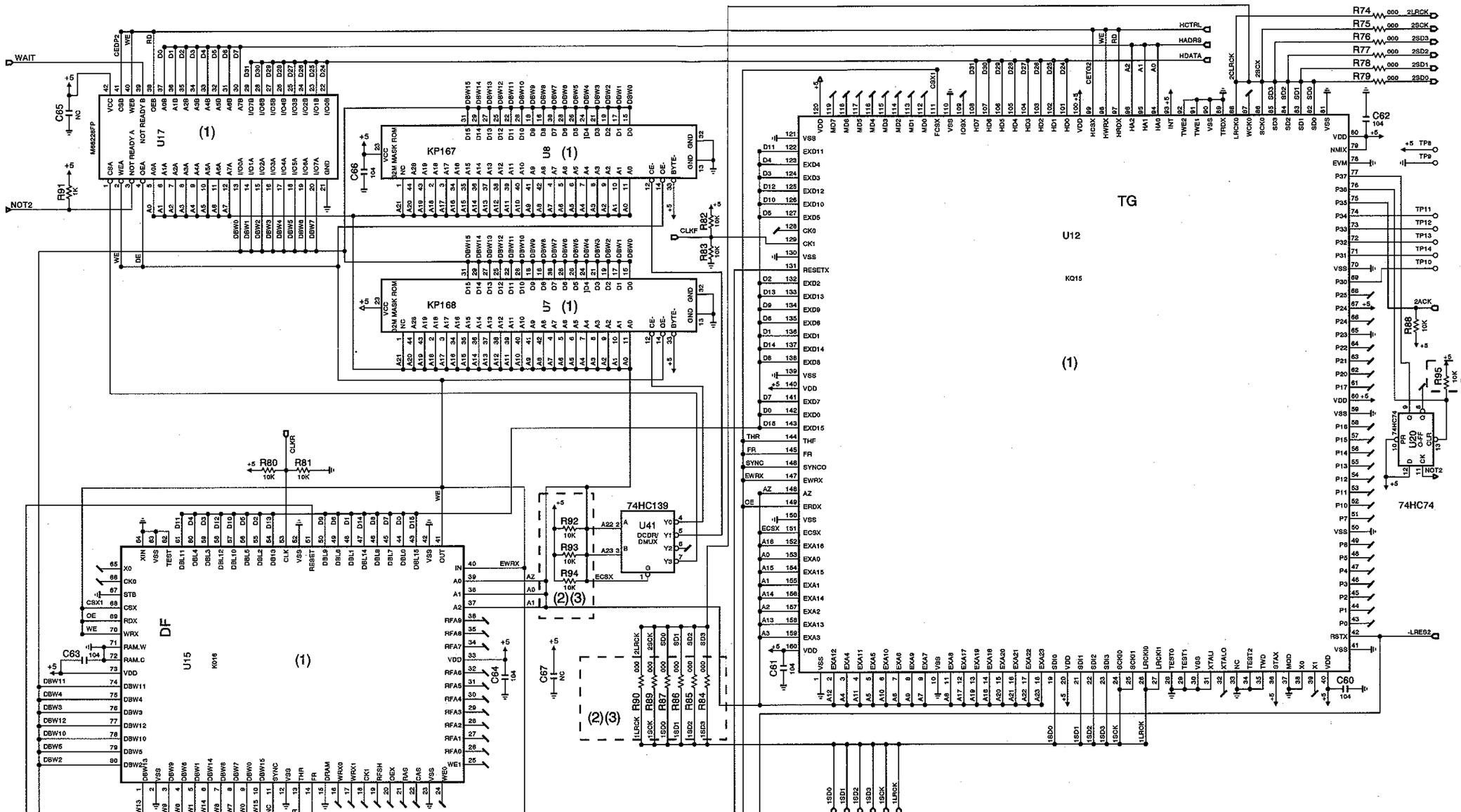

18. KMI-062(1),(2),(3) CIRCUIT (5/8)

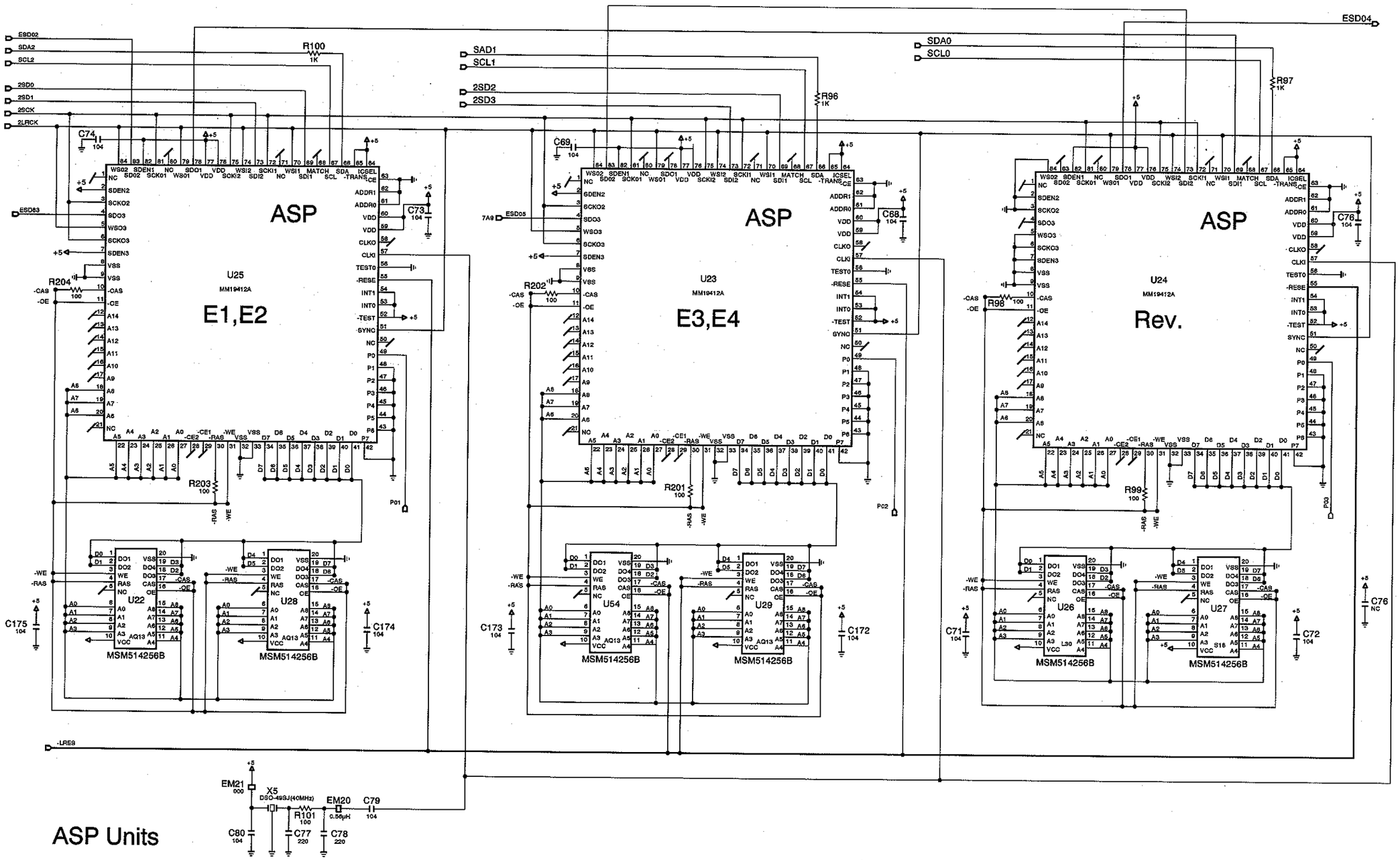

19. KMI-062(1),(2),(3) CIRCUIT (6/8)

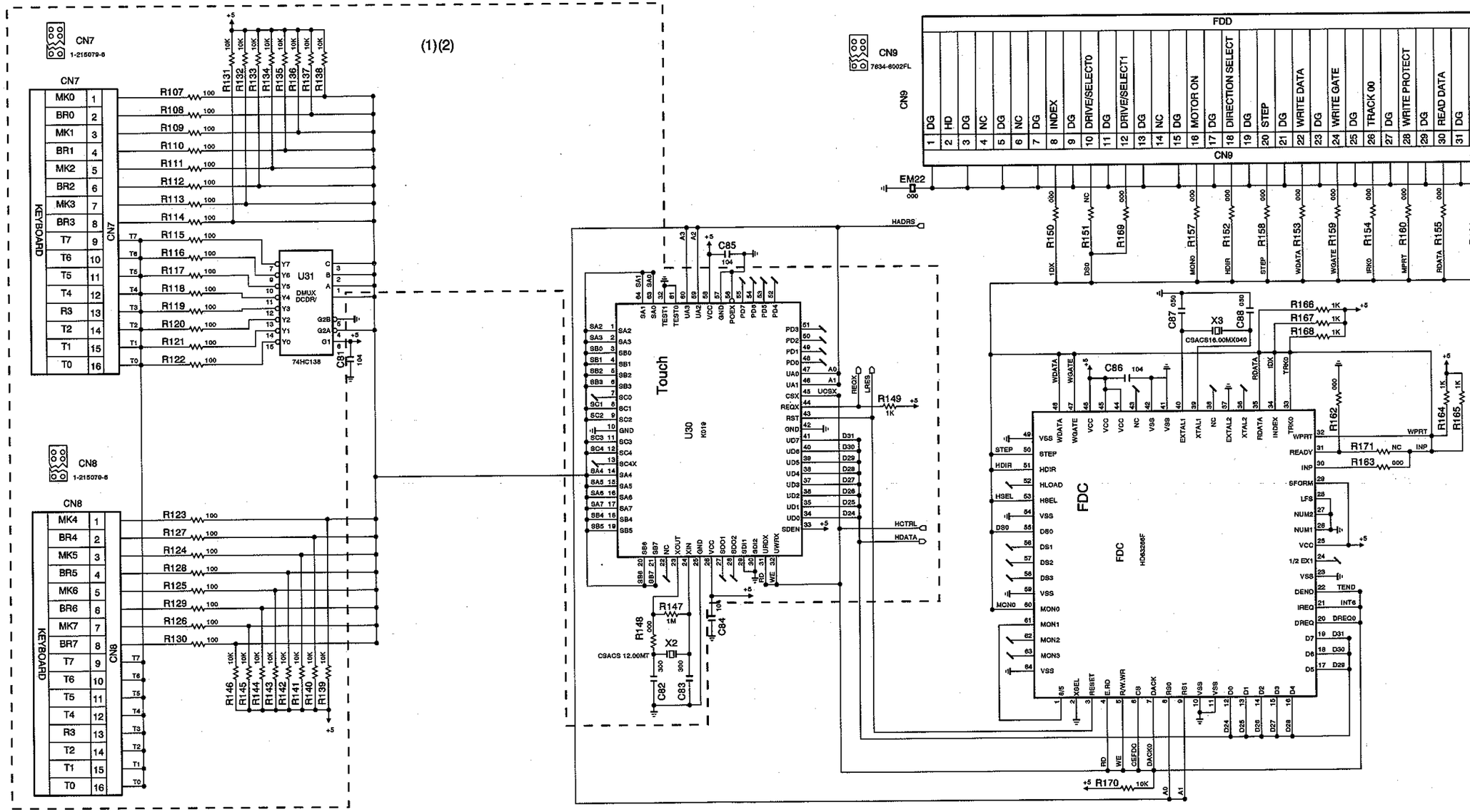

FDC

20. KMI-062(1),(2),(3) CIRCUIT (7/8)

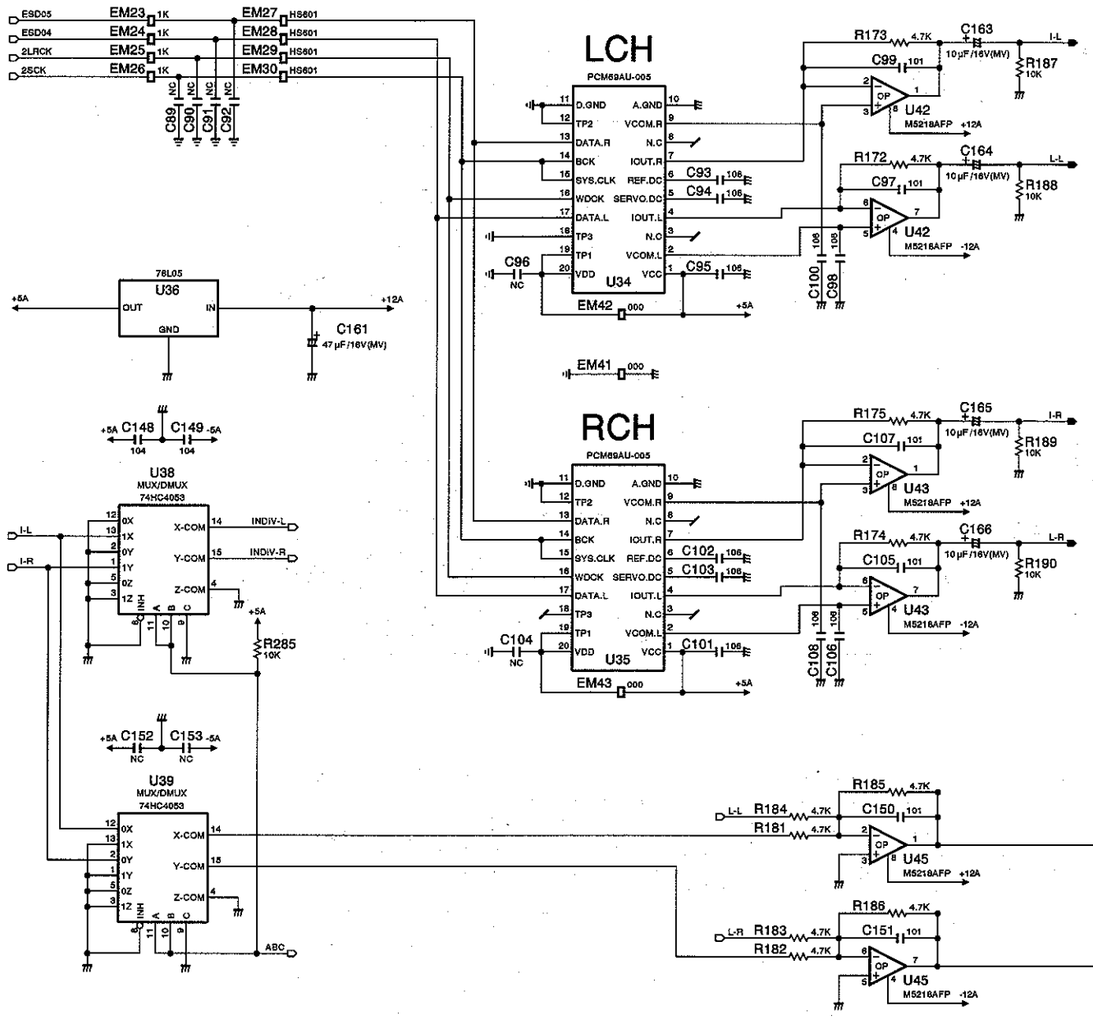

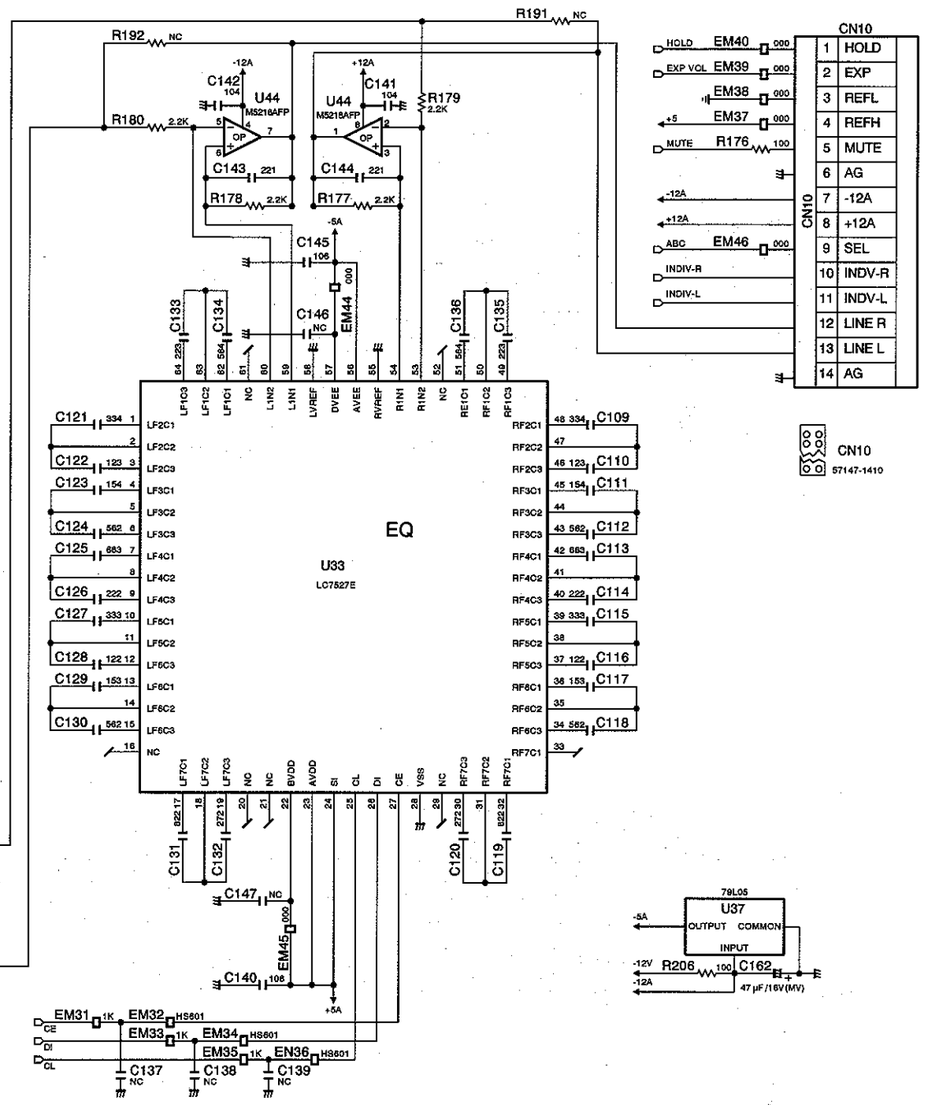

ANALOG

21. KMI-062(1),(2),(3) CIRCUIT (8/8)

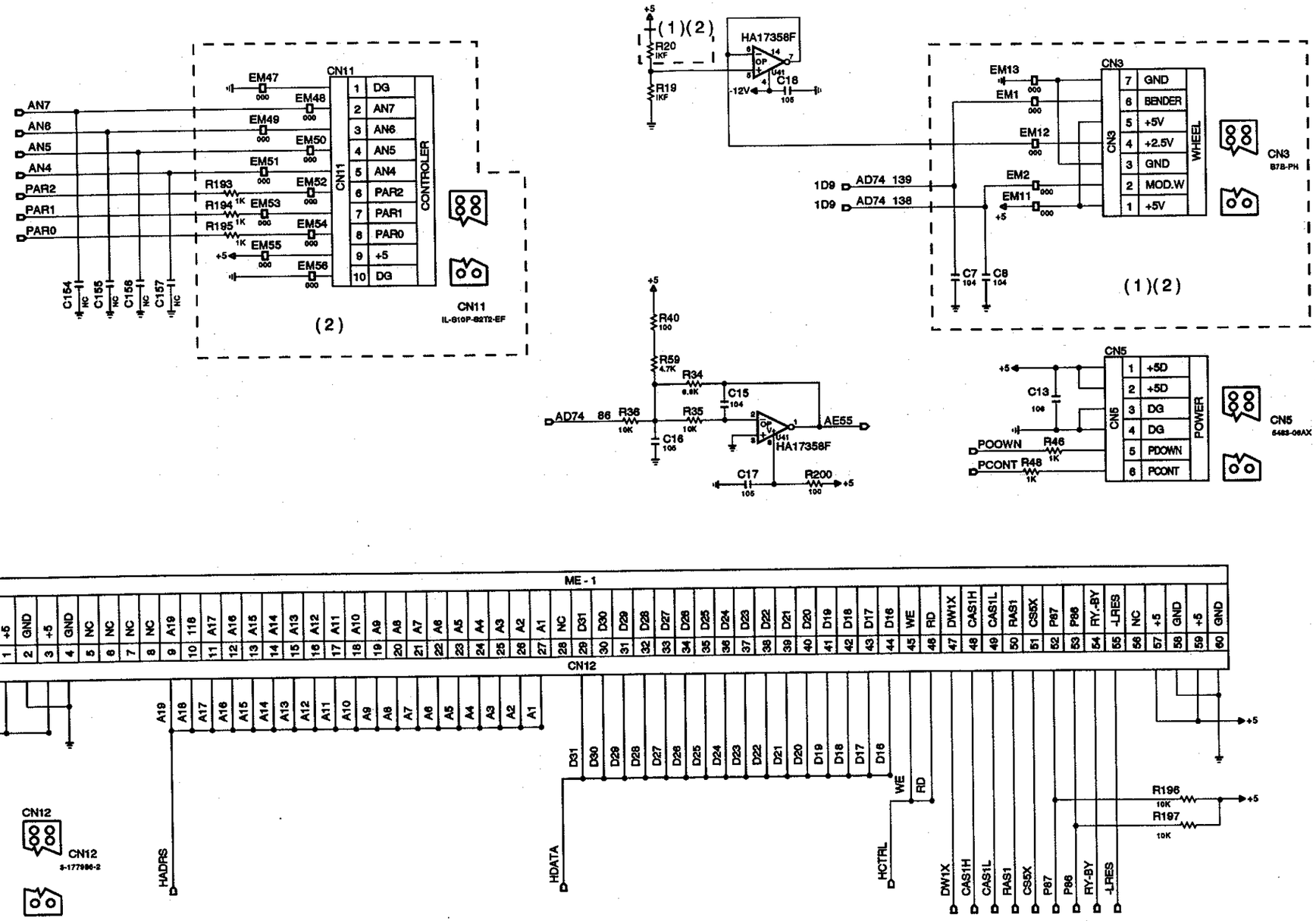

22. KMI-065,066 PRINTED WIRING BOARDS(W type)

(KMI - 065)

KMI - 066 CN5	PLE1	12
	POE	11
	PD7	10
	PD6	9
	PD5	8
	PD4	7
	PD3	6
	PD2	5
	PD1	4
	PD0	3
	GND	2
	+5	1

(KMI - 066)

KMI - 065 CN6	+5	1
	GND	2
	PD0	3
	PD1	4
	PD2	5
	PD3	6
	PD4	7
	PD5	8
	PD6	9
	PD7	10
	POE	11
	PLE1	12

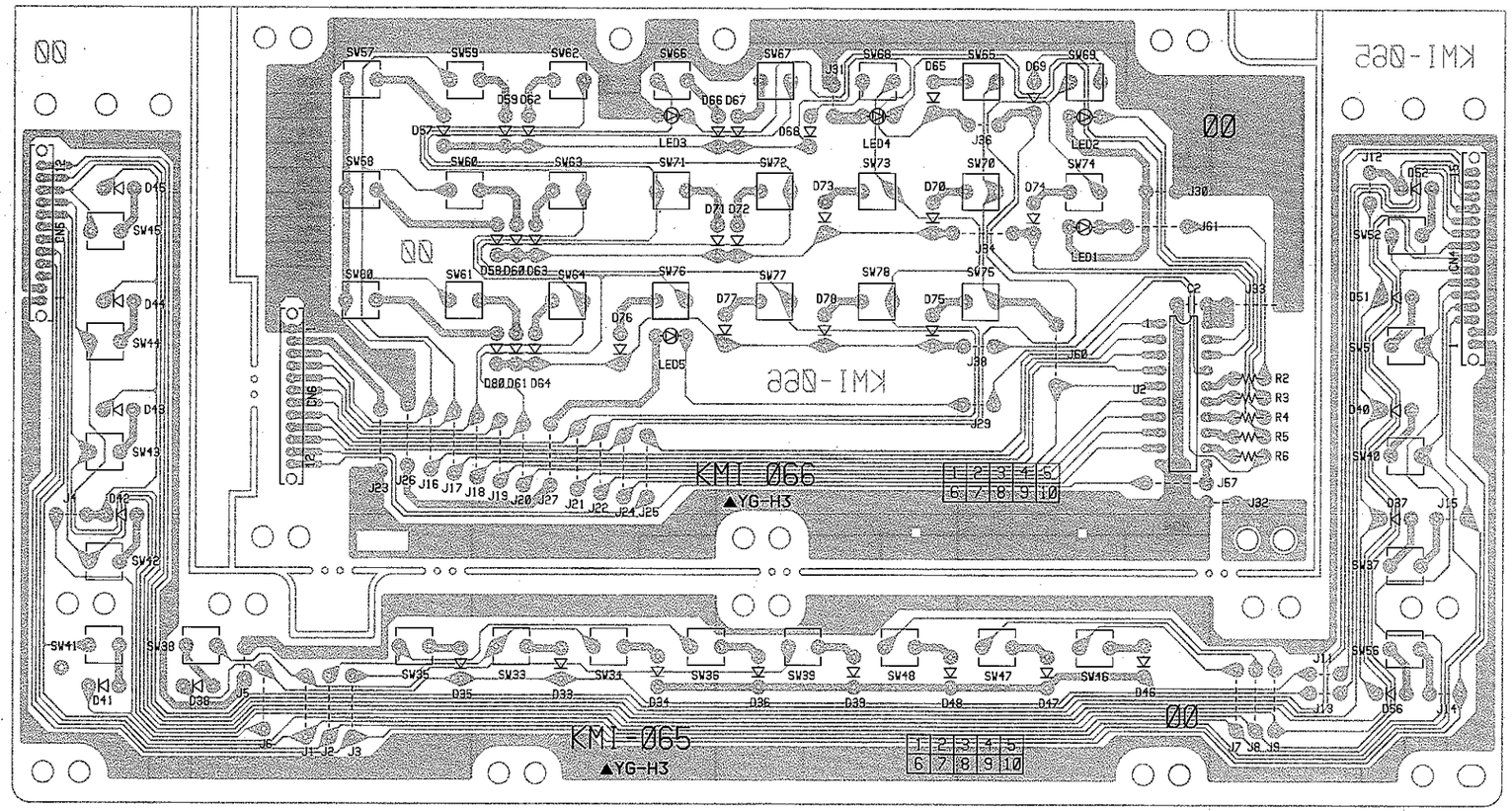

(KMI - 065)

KMI - 064 CN4	15	PLE1
	14	POE
	13	SC6
	12	SC5
	11	SC4
	10	PD7
	9	PD6
	8	PD5
	7	PD4
	6	PD3
	5	PD2
	4	PD1
	3	PD0
	2	GND
	1	+5D

23. KMI-065 CIRCUIT(W type)

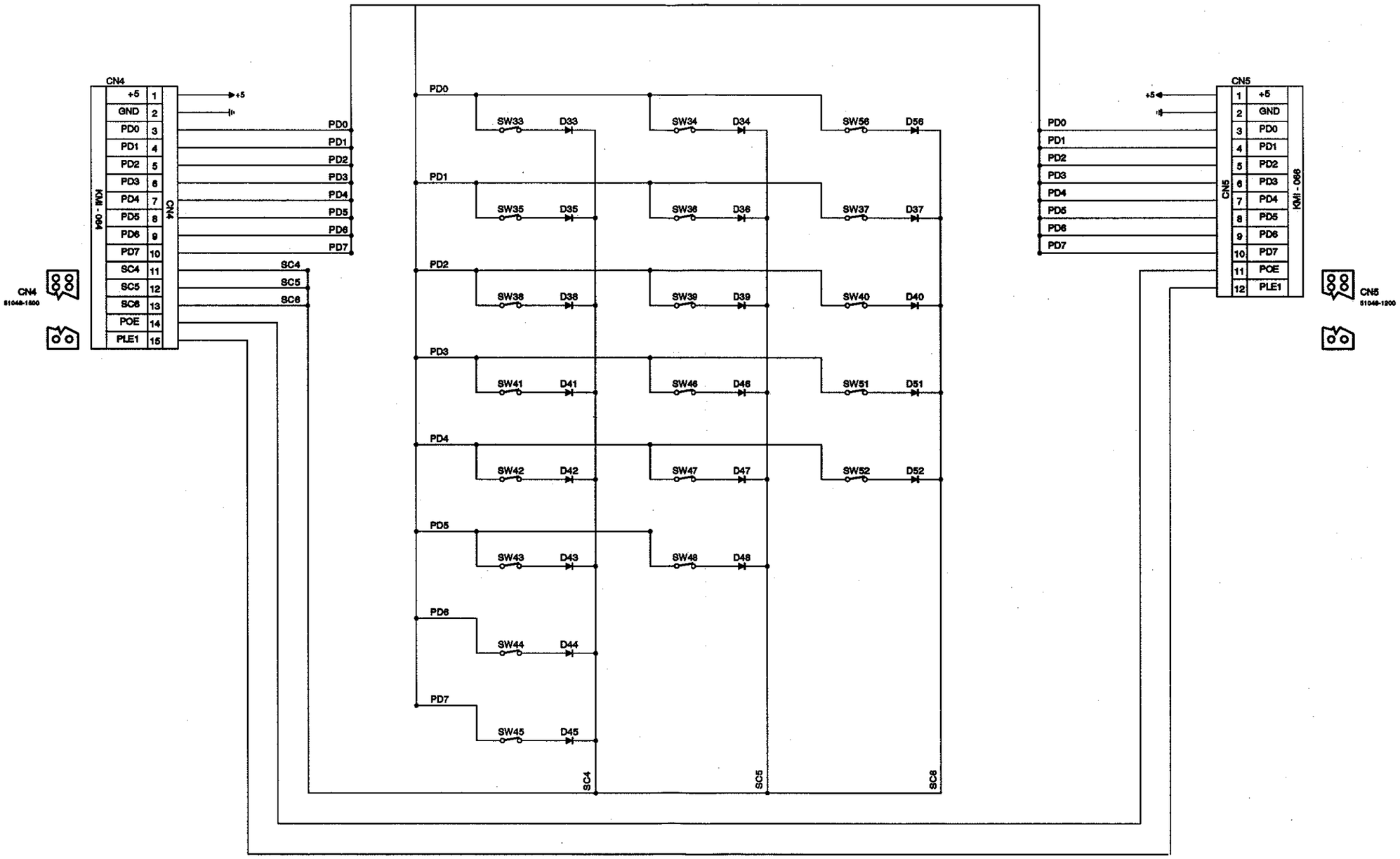

PANEL SW CENTER

SW : SOR-123HS
D : 1SS270

24. KMI-066 CIRCUIT(W type)

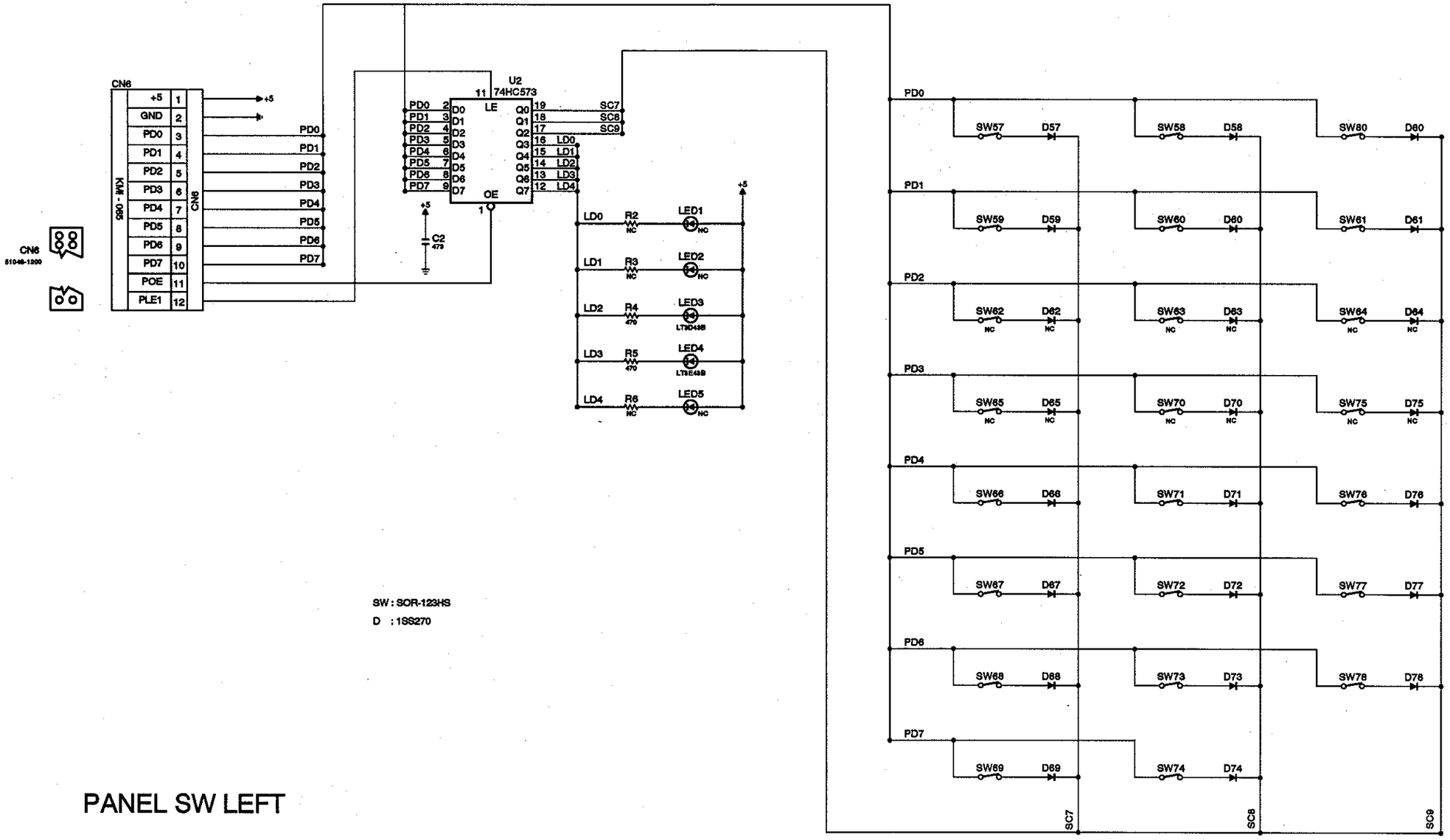

SW : SOR-123HS
D : 1SS270

PANEL SW LEFT

25. KMI-064,067~070 PRINTED WIRING BOARDS(W type)

(KMI - 068)

KMI - 079											
IRS	GND	IRR	ILS	GND	ILR	LRS	GND	LRR	LLS	GND	LLR
1	2	3	4	5	6	7	8	9	10	11	12
CN10											

(KMI - 069)

KMI - 062			
+12A	PRESS	GND	+5
4	3	2	1
CN8			

KEYBOARD			
	GND	1	CN7
	GND	2	
	SENS	3	
	SENS	4	

(KMI - 070)

KMI - 079		
HPR	GND	HPL
3	2	1
CN9		

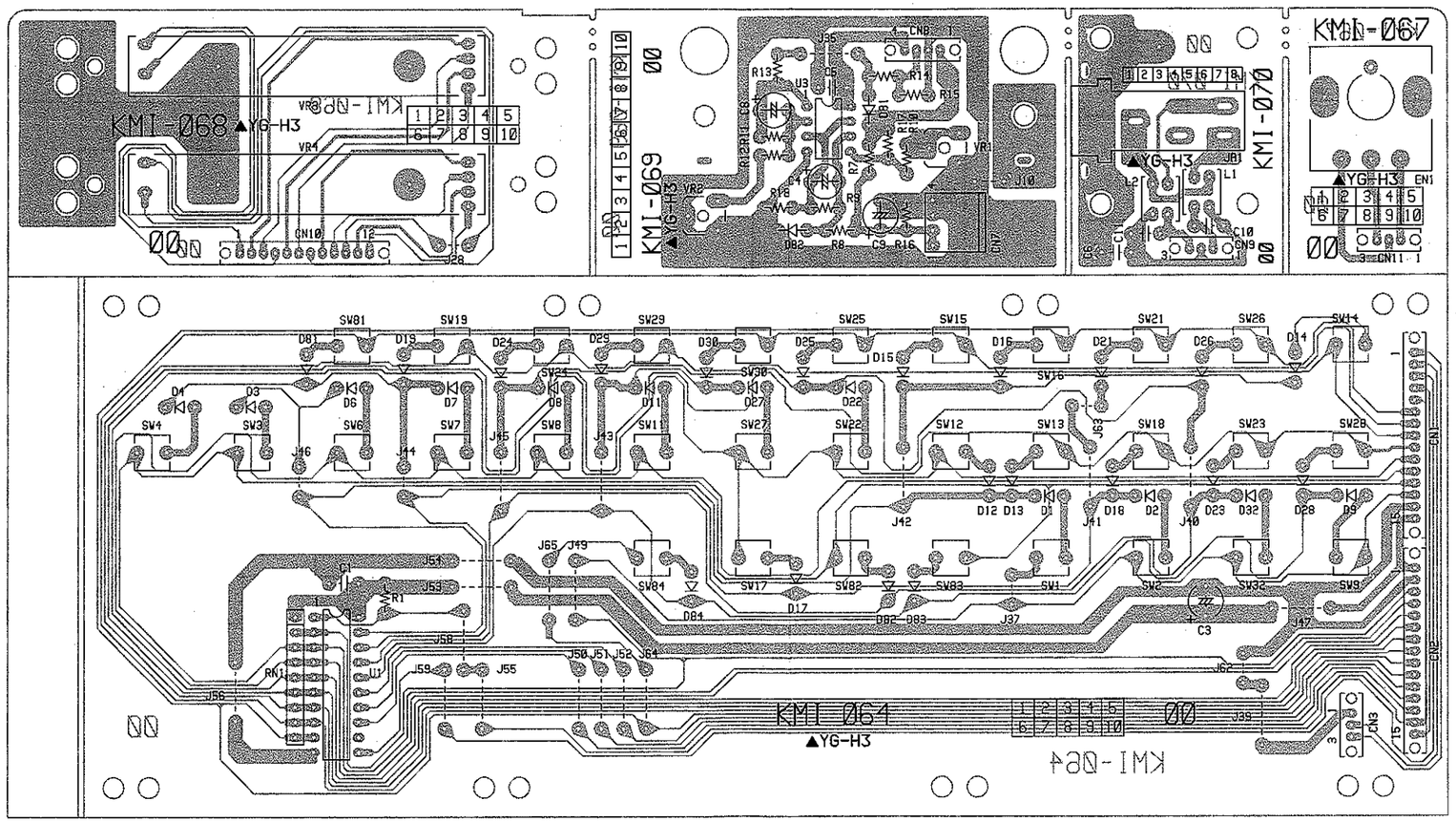

(KMI - 079)

CN11		
1	2	3
BIN0	AIN0	GND
KMI - 064		

(KMI - 064)

CN1			KMI - 062
	1	BIN0	
	2	AIN0	
	3	PLE2	
	4	PLE1	
	5	POE	
	6	PD7	
	7	PD6	
	8	PD5	
	9	PD4	
	10	PD3	
	11	PD2	
	12	PD1	
	13	PD0	
	14	GND	
	15	+5	

(KMI - 064)

CN2			KMI - 065
	1	+5	
	2	GND	
	3	PD0	
	4	PD1	
	5	PD2	
	6	PD3	
	7	PD4	
	8	PD5	
	9	PD6	
	10	PD7	
	11	SC4	
	12	SC5	
	13	SC6	
	14	POE	
	15	PLE2	

(KMI - 064)

CN3			KMI - 067
	1	GND	
	2	AIN0	
	3	BIN0	

26. KMI-064 CIRCUIT (W type)

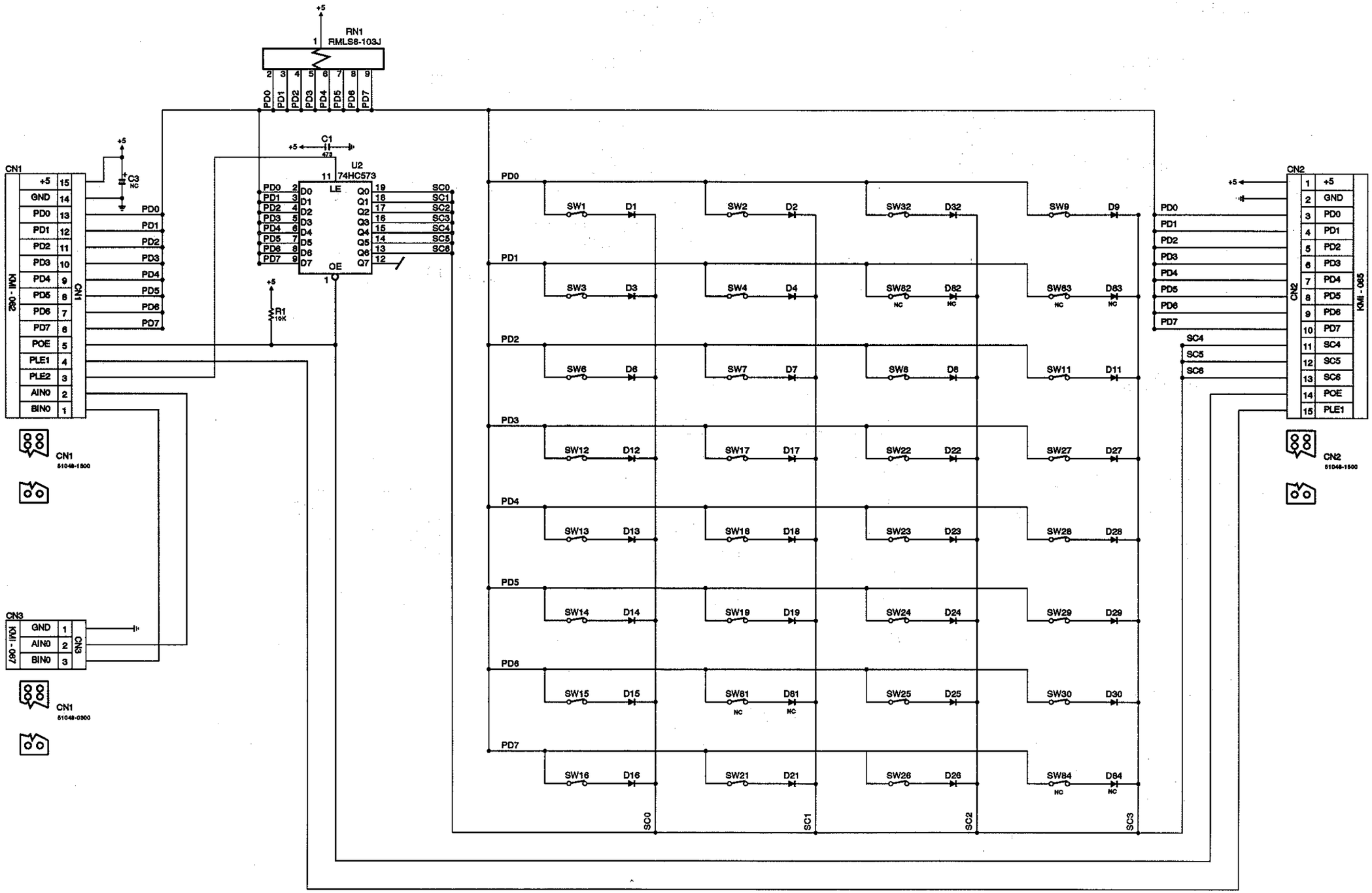

PANEL SW RIGHT

SW : SOR-123HS
D : 1SS270

27. KMI-067~070 CIRCUITS (W type)

KMI-067

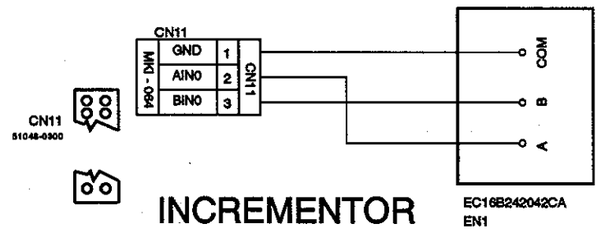

INCREMENTOR

KMI-068

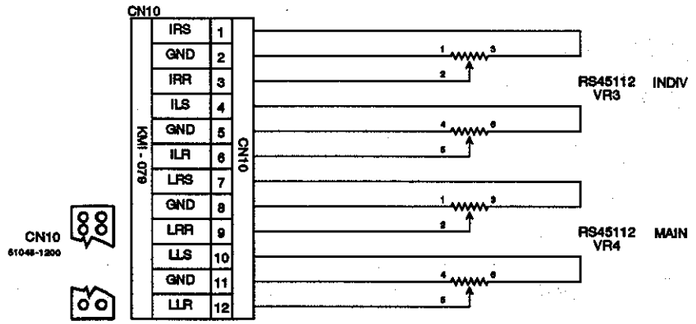

VOLUME

KMI-069

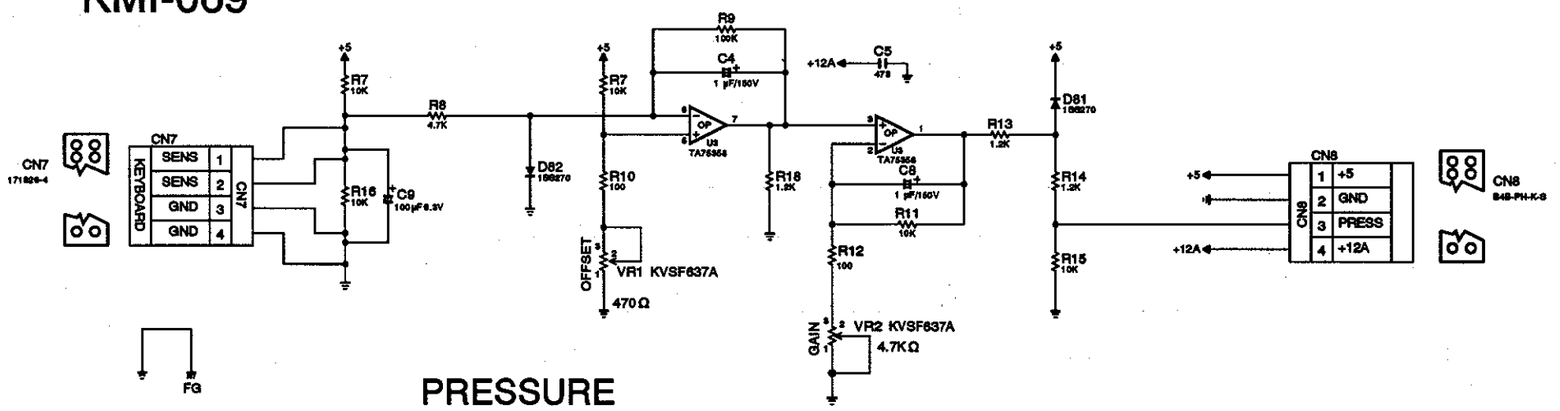

PRESSURE

KMI-070

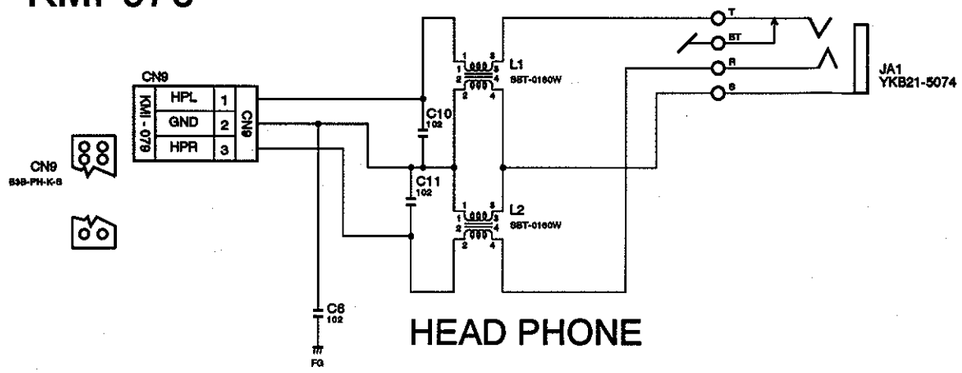

HEAD PHONE

28. KMI-081,085 PRINTED WIRING BOARDS(S type)

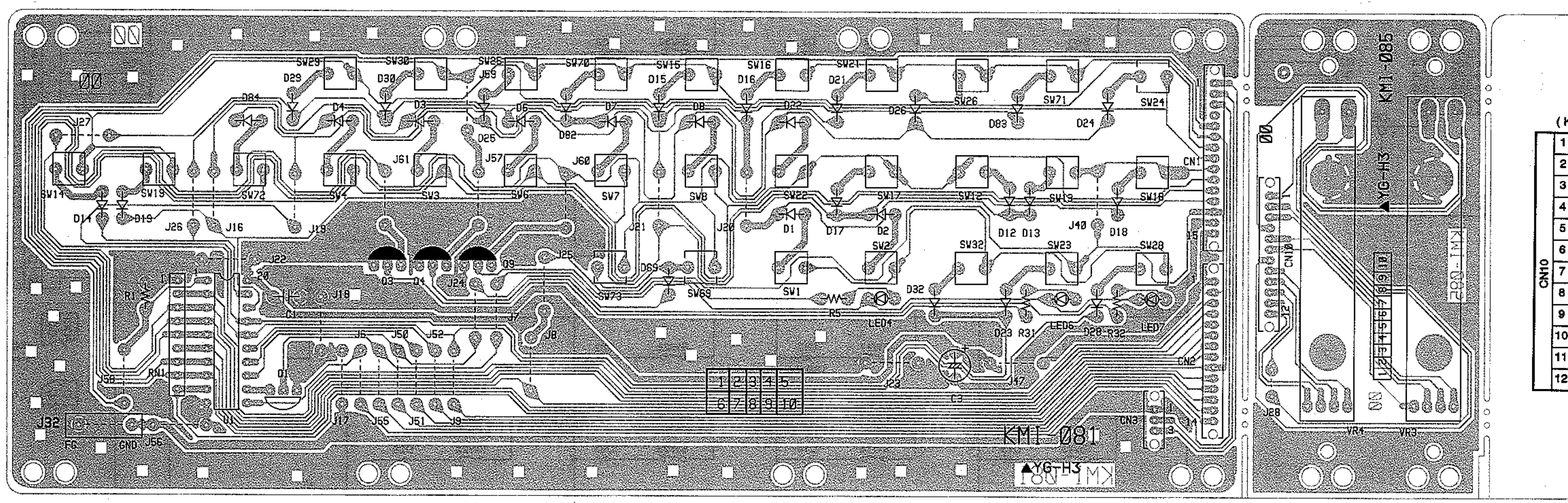

(KMI - 085)

CN10 → KMI - 079

1	IRS
2	GND
3	IRR
4	ILS
5	GND
6	ILR
7	LRS
8	GND
9	LRR
10	LLS
11	GND
12	LLR

CN3 → KMI - 084

1	GND
2	BIN0
3	AIN0

(KMI - 081)

CN1 → KMI - 062

1	BIN0
2	AIN0
3	PLE2
4	PLE1
5	POE
6	PD7
7	PD6
8	PD5
9	PD4
10	PD3
11	PD2
12	PD1
13	PD0
14	GND
15	+5

(KMI - 081)

CN2 → KMI - 082

1	+5
2	PD0
3	PD1
4	PD2
5	PD3
6	PD4
7	PD5
8	PD6
9	PD7
10	SC3
11	SC4
12	SC5
13	SC6
14	SC7

(KMI - 081)

29. KMI-081,085 CIRCUITS (S type)

KMI-081

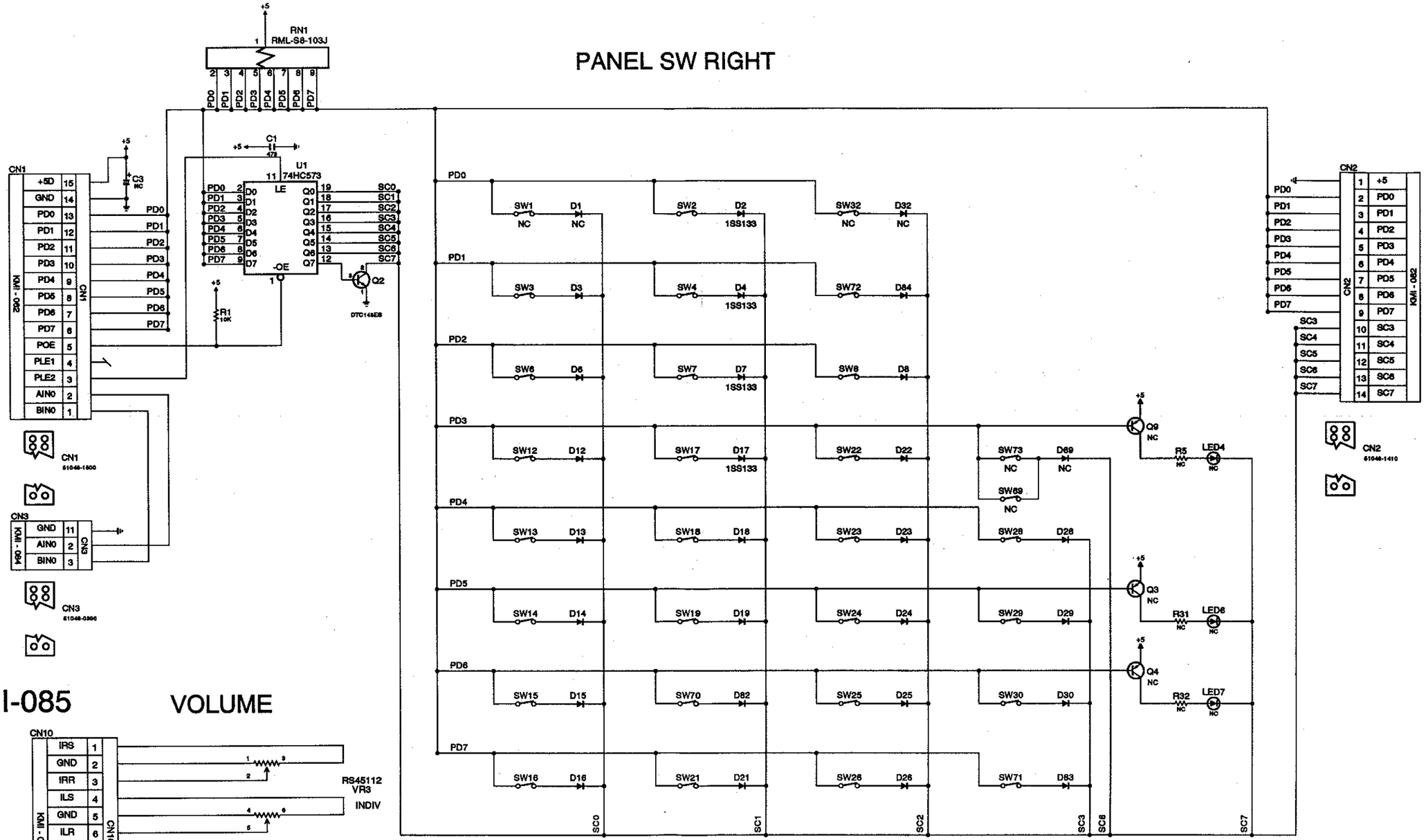

KMI-085

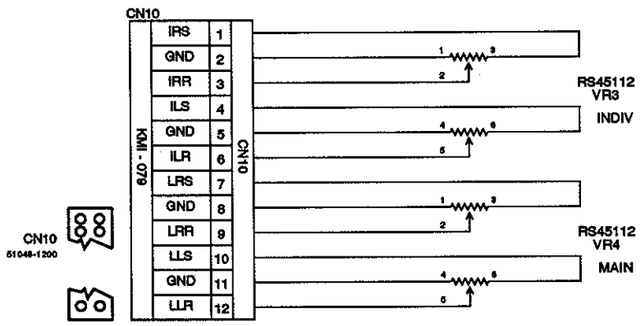

SW : SOR-123HS
D : 1SS270

30. KMI-082~084,086~089 PRINTED WIRING BOARDS(S type)

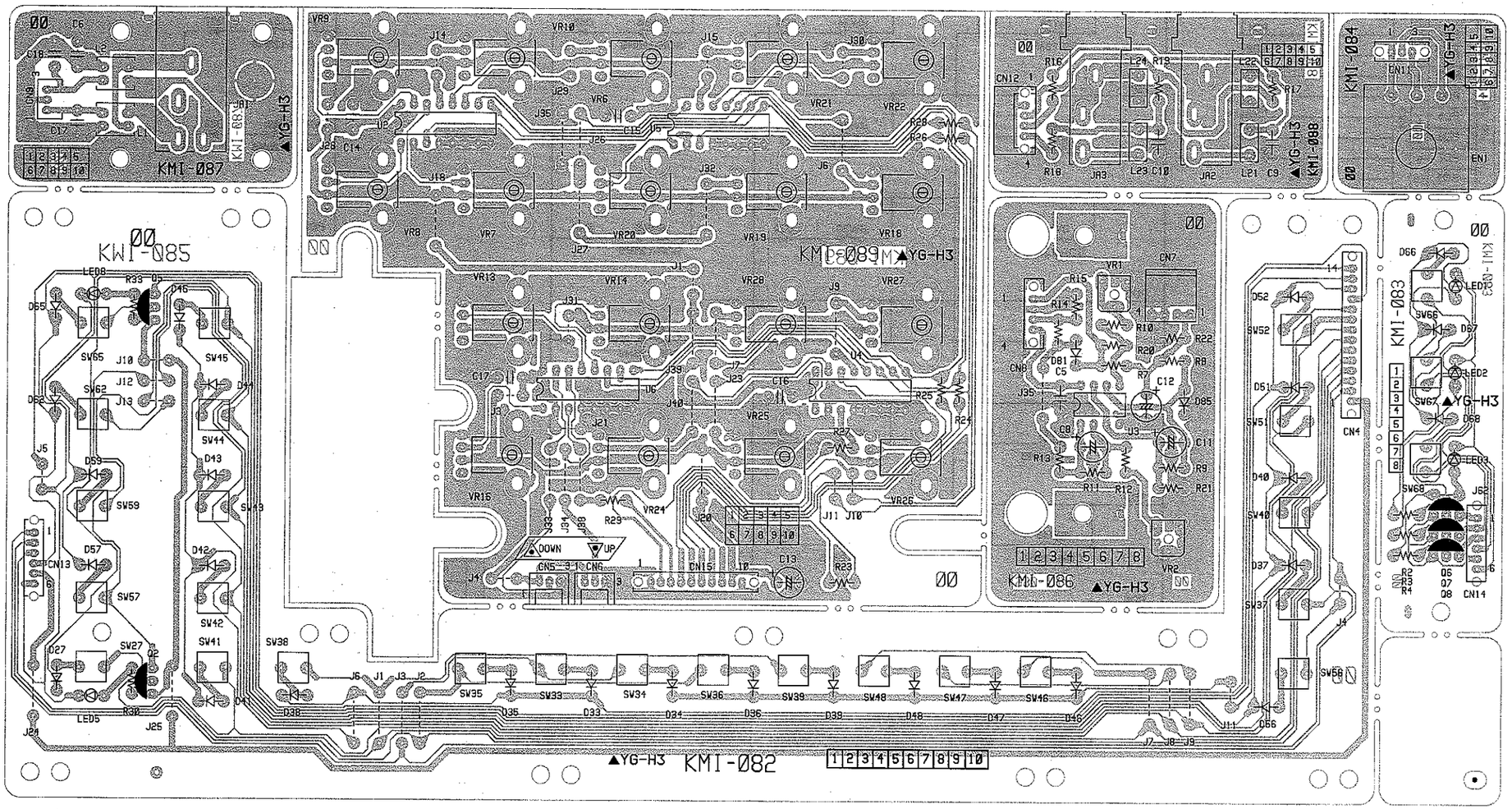

(KMI - 087)

KMI - 078	HPR	1	GND
	GND	2	
	HPL	3	

(KMI - 088)

KMI - 078	GND	1	CN12
	+5	2	
	FS1	3	
	FS2	4	

(KMI - 084)

KMI - 081		
GND	AIN0	BIN0
3	2	1
CN11		

(KMI - 082)

KMI - 083	PD0	1	CN13
	PD1	2	
	PD2	3	
	SC6	4	
	+5	5	
	SC7	6	

(KMI - 083)

CN14	1	PD0	KMI - 082
	2	PD1	
	3	PD2	
	4	SC6	
	5	+5	
	6	SC7	

CN4			
	14	SC7	KMI - 081
	13	SC6	
	12	SC5	
	11	SC4	
	10	SC3	
	9	PD7	
	8	PD6	
	7	PD5	
	6	PD4	
	5	PD3	
	4	PD2	
	3	PD1	
	2	PD0	
	1	+5	

(KMI - 085)

CN7			CN6		
1	2	3	1	2	3
+5	VR1	GND	+5	VR2	GND
MODE			PATTERN		

(KMI - 089)

CN15									
1	2	3	4	5	6	7	8	9	10
GND	AN7	AN6	AN5	AN4	PAR2	PAR1	PAR0	+5D	GND
KMI - 062									

(KMI - 089)

CN8	1	+5	KMI - 062
	2	GND	
	3	PRESS	
	4	+12A	

(KMI - 086)

CN7			
4	3	2	1
GND	GND	SENS	SENS
KEYBOARD			

(KMI - 086)

31. KMI-082 CIRCUIT(S type)

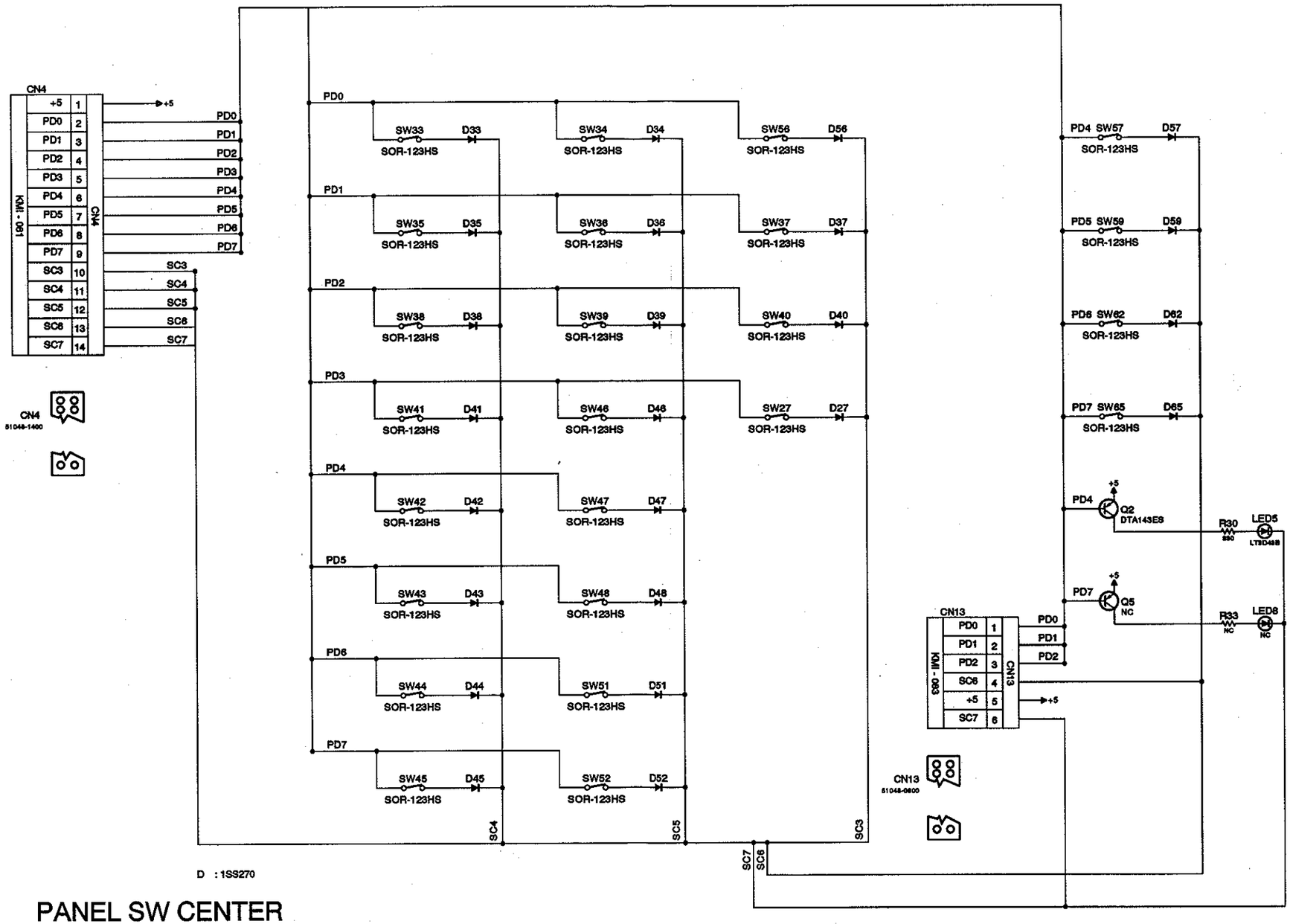

D : 1SS270

PANEL SW CENTER

32. KMI-083,084,086~088 CIRCUITS(S type)

KMI-083

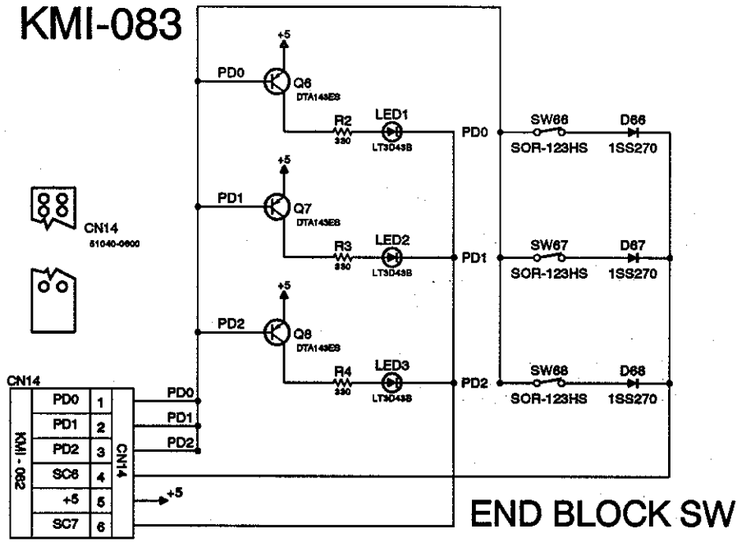

KMI-084

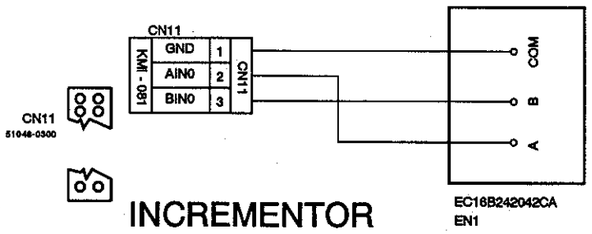

KMI-088

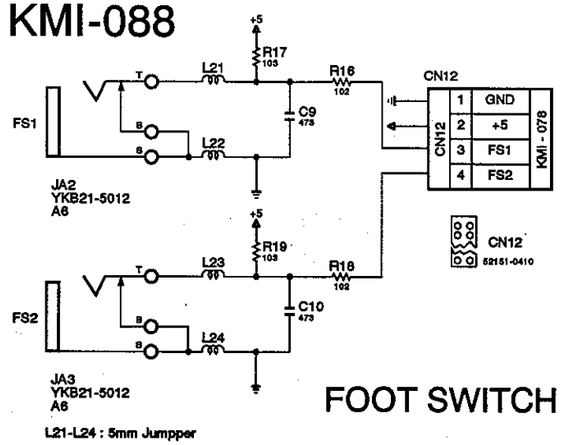

KMI-086

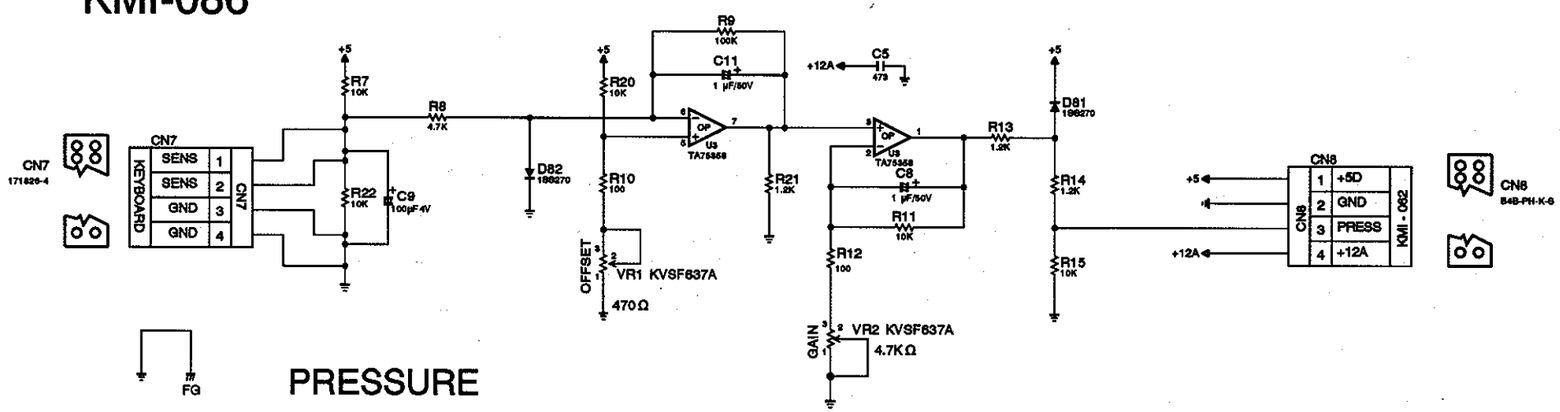

KMI-087

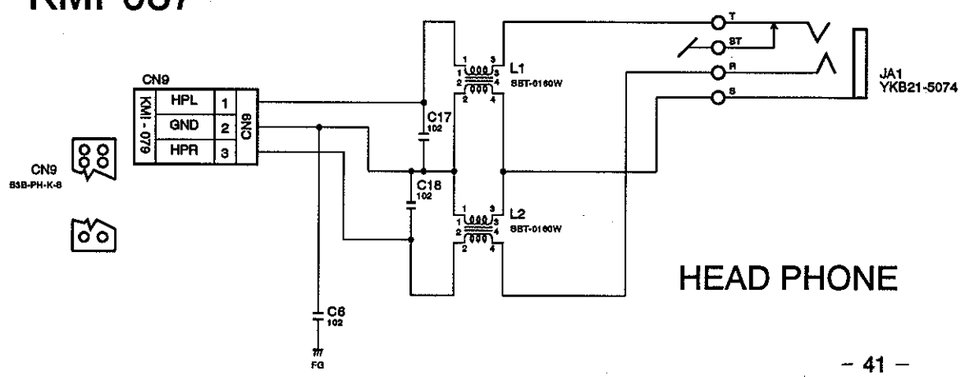

33. KMI-089 CIRCUIT (S type)

KMI-089

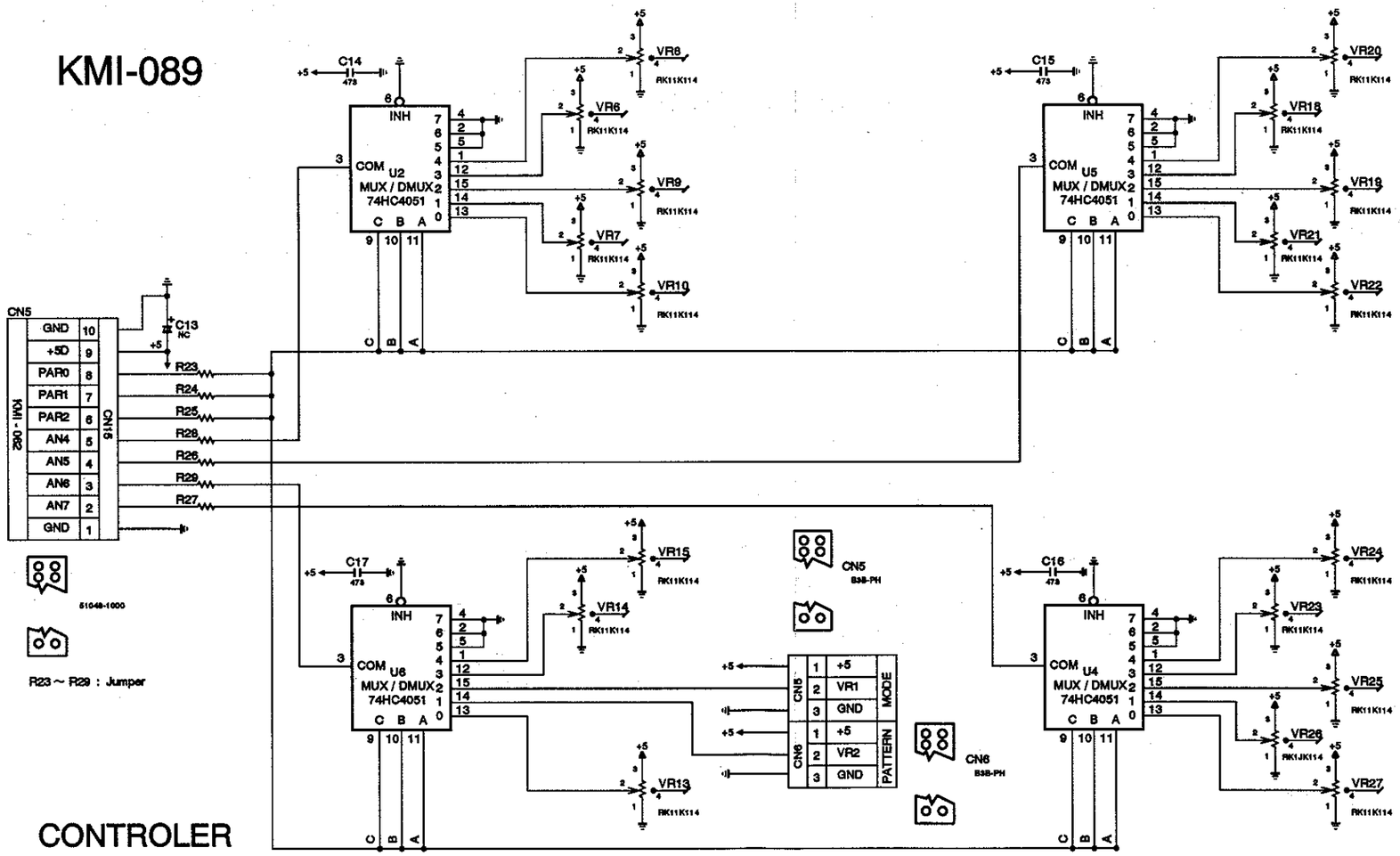

34. KMI-091~096 PRINTED WIRING BOARDS(R type)

(KMI - 096)

KMI - 079		
HPL	GND	HPR
3	2	1
CN9		

(KMI - 082)

KMI - 079		CN8
IRS	1	
GND	2	
IRR	3	
ILS	4	
GND	5	
ILP	6	
LRS	7	
GND	8	
LRR	9	
LLS	10	
GND	11	
LLR	12	

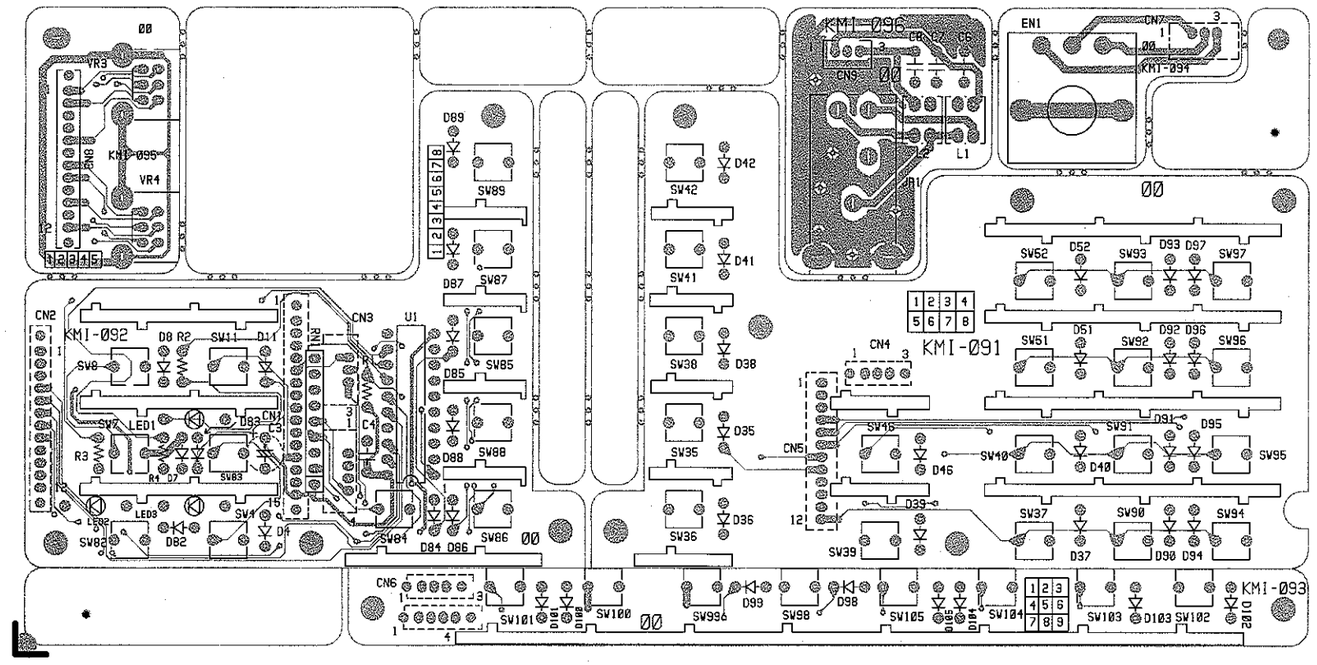

35. KMI-091~096 PRINTED WIRING BOARDS(R type)(Solder side)

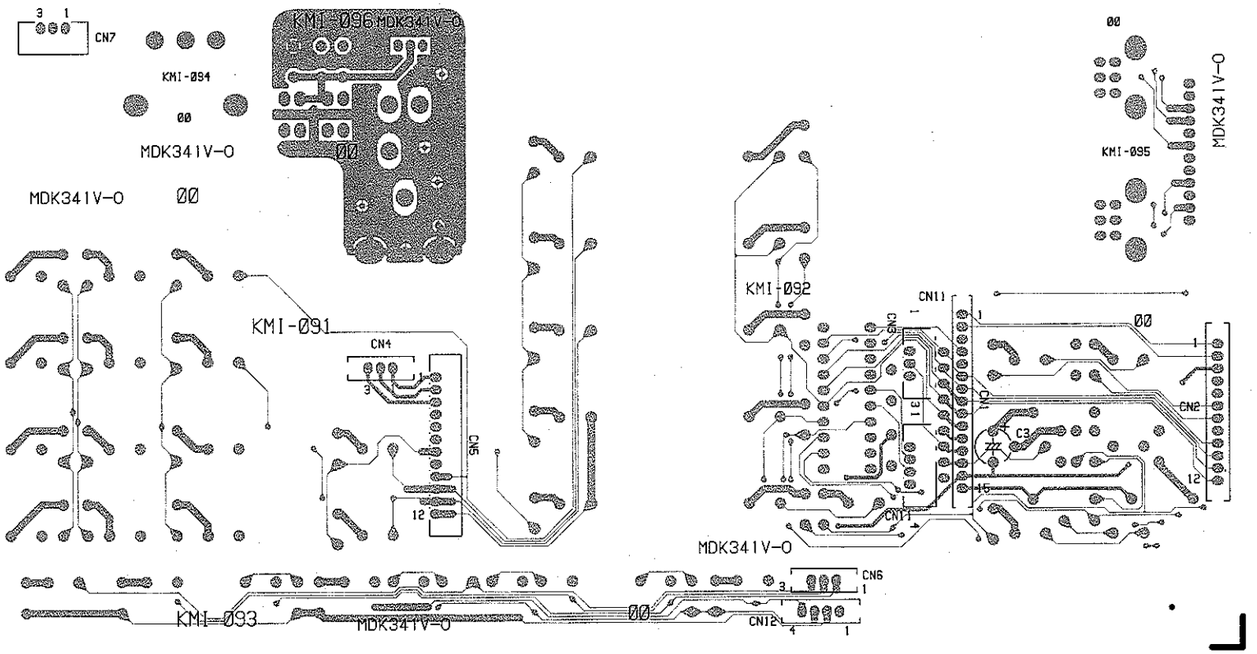

CN7		
3	2	1
BIN0	AIN0	GND
KMI - 091		

(KMI - 094)

CN4		
3	2	1
GND	AIN0	BIN0
KMI - 094		

(KMI - 091)

KMI - 092		CN5
BIN0	1	
AIN0	2	
GND	3	
SC4	4	
SC3	5	
SC2	6	
SC1	7	
SC0	8	
PD7	9	
PD6	10	
PD5	11	
PD4	12	

(KMI - 091)

CN8		
3	2	1
PD0	PD1	PD2
KMI - 092		

(KMI - 093)

CN12			
4	3	2	1
PD3	SC3	SC4	NC
KMI - 092			

(KMI - 093)

CN11		KMI - 093
1	NC	
2	SC4	
3	SC3	
4	PD3	

(KMI - 092)

CN3		KMI - 093
1	PD2	
2	PD1	
3	PD0	

(KMI - 092)

(KMI - 092)

CN1		KMI - 062
1	BIN0	
2	AIN0	
3	PLE2	
4	PLE1	
5	POE	
6	PD7	
7	PD6	
8	PD5	
9	PD4	
10	PD3	
11	PD2	
12	PD1	
13	PD0	
14	GND	
15	+5D	

(KMI - 092)

CN2		KMI - 091
1	BIN0	
2	AIN0	
3	GND	
4	SC4	
5	SC3	
6	SC2	
7	SC1	
8	SC0	
9	PD7	
10	PD6	
11	PD5	
12	PD3	

36. KMI-092 CIRCUIT(R type)

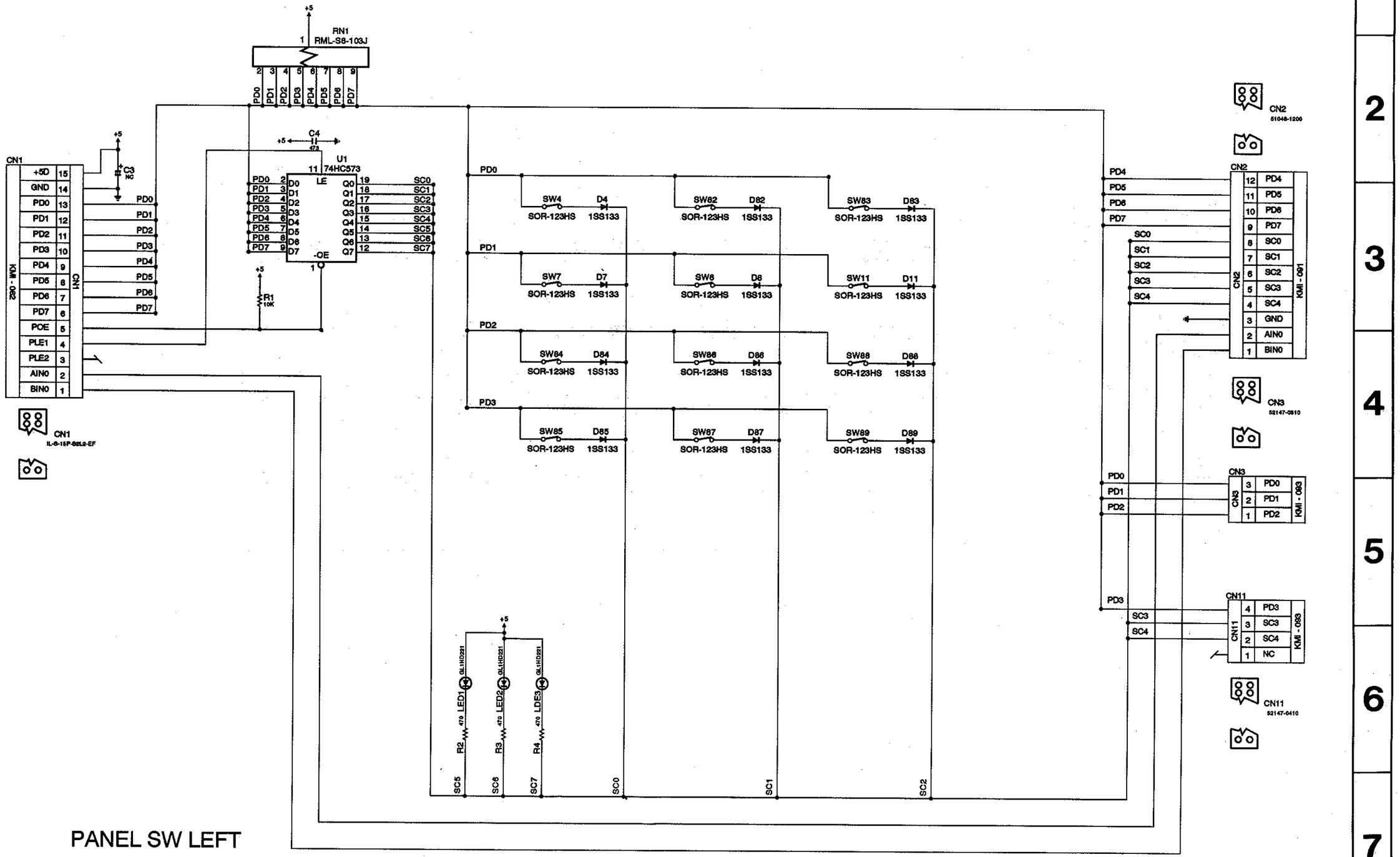

PANEL SW LEFT

37. KMI-091 CIRCUIT(R type)

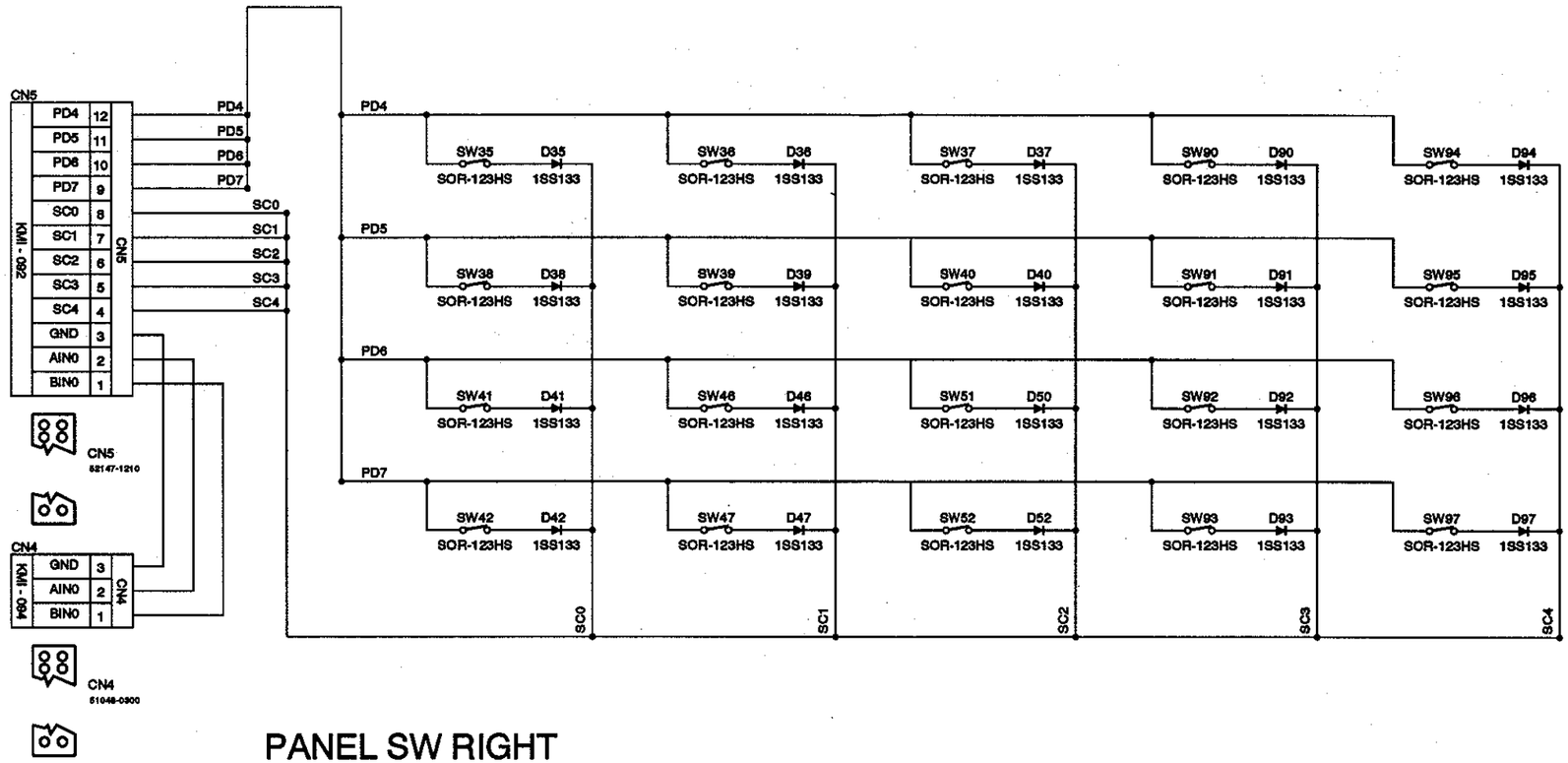

PANEL SW RIGHT

38. KMI-093~096 CIRCUITS(R type)

KMI-093

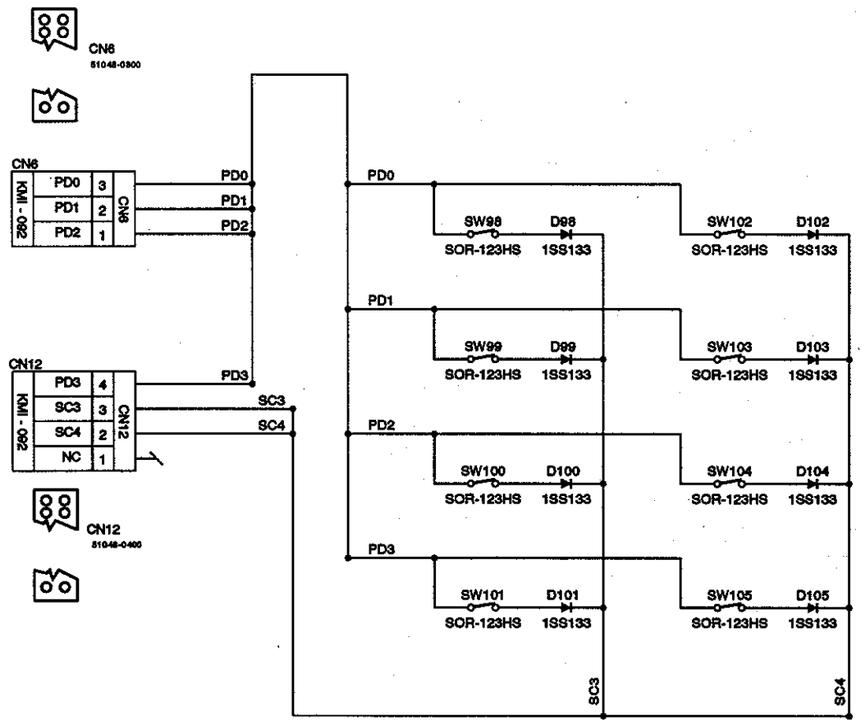

PANEL SW CENTER

KMI-095

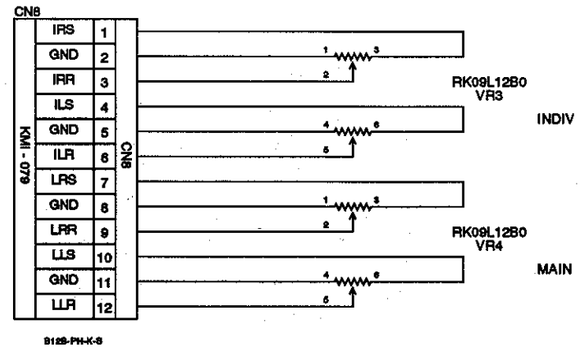

VOLUME

KMI-094

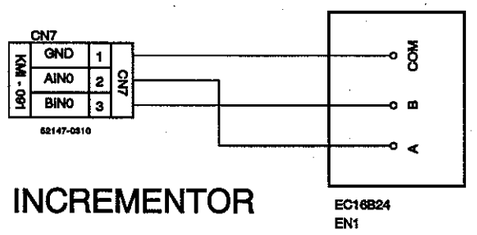

INCREMENTOR

KMI-096

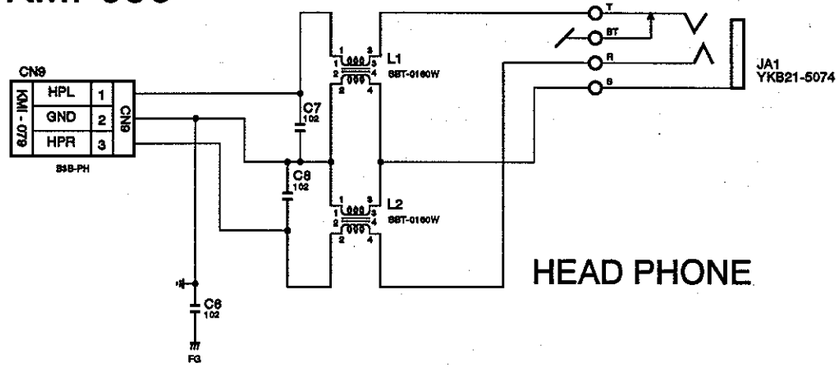

HEAD PHONE

39. KMI -077~079 PRINTED WIRING BOARDS(W type)

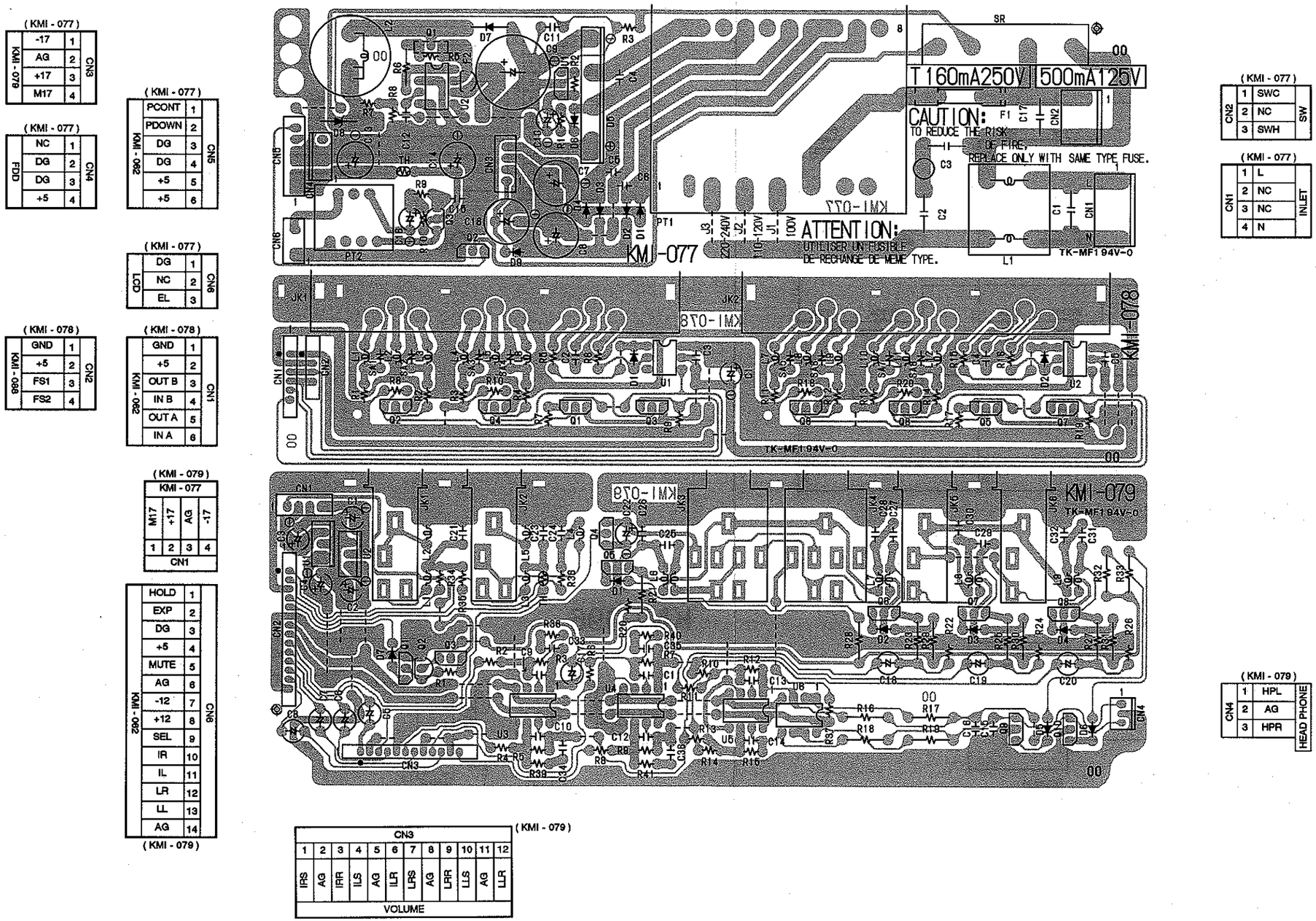

(KMI - 077)

KMI - 079			CN3
-17	1		
AG	2		
+17	3		
M17	4		

(KMI - 077)

FDD			CN4
NC	1		
DG	2		
DG	3		
+5	4		

(KMI - 077)

KMI - 062			CN5
PCONT	1		
PDOWN	2		
DG	3		
DG	4		
+5	5		
+5	6		

(KMI - 077)

LCD			CN6
DG	1		
NC	2		
EL	3		

(KMI - 078)

KMI - 038			CN2
GND	1		
+5	2		
FS1	3		
FS2	4		

(KMI - 078)

KMI - 062			CN1
GND	1		
+5	2		
OUT B	3		
IN B	4		
OUT A	5		
IN A	6		

(KMI - 079)

KMI - 077				
M17	+17	AG	-17	
1	2	3	4	CN1

(KMI - 079)

KMI - 062			CN6
HOLD	1		
EXP	2		
DG	3		
+5	4		
MUTE	5		
AG	6		
-12	7		
+12	8		
SEL	9		
IR	10		
IL	11		
LR	12		
LL	13		
AG	14		

(KMI - 079)

CN3											
1	2	3	4	5	6	7	8	9	10	11	12
IRS	AG	IRR	ILS	AG	ILR	LRS	AG	LRR	LLS	AG	LLR
VOLUME											

(KMI - 077)

CN2			SW
1	SWC		
2	NC		
3	SWH		

(KMI - 077)

CN1			INLET
1	L		
2	NC		
3	NC		
4	N		

(KMI - 079)

CN4			HEAD PHONE
1	HPL		
2	AG		
3	HPR		

40. KMI-077 CIRCUIT

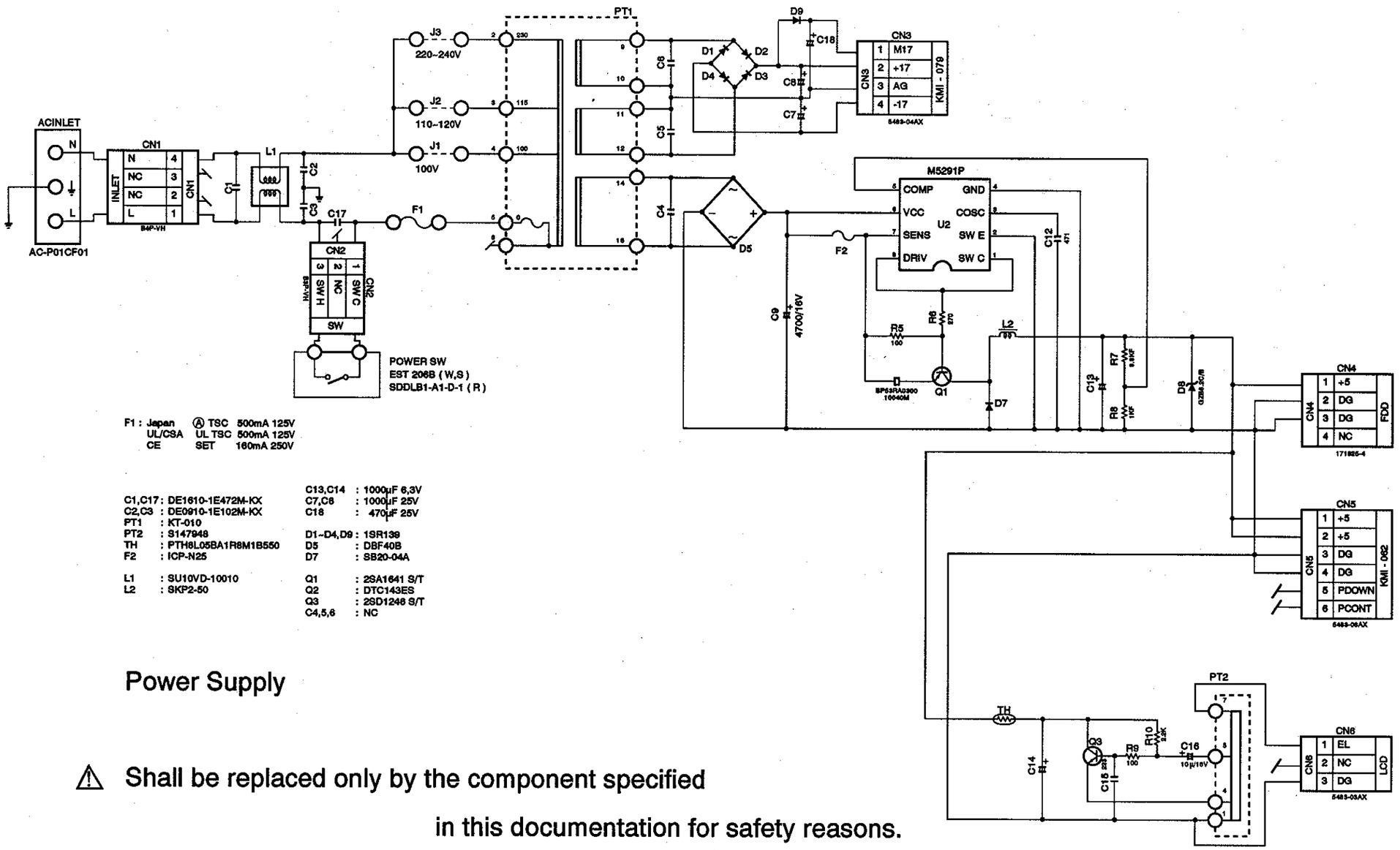

F1 : Japan Ⓐ TSC 500mA 125V
UL/CSA UL TSC 500mA 125V
CE SET 160mA 250V

C1,C17 : DE1610-1E472M-KX
C2,C3 : DE0910-1E102M-KX
PT1 : KT-010
PT2 : S147948
TH : PTH8L05BA1R8M1B550
F2 : ICP-N25

L1 : SU10VD-10010
L2 : SKP2-50

C13,C14 : 1000μF 6,3V
C7,C8 : 1000μF 25V
C18 : 470μF 25V

D1~D4,D9 : 1SR139
D5 : DBF40B
D7 : SB20-04A

Q1 : 2SA1641 S/T
Q2 : DTC143ES
Q3 : 2SD1248 S/T
C4,5,6 : NC

Power Supply

⚠ Shall be replaced only by the component specified in this documentation for safety reasons.

41. KMI-078 CIRCUIT

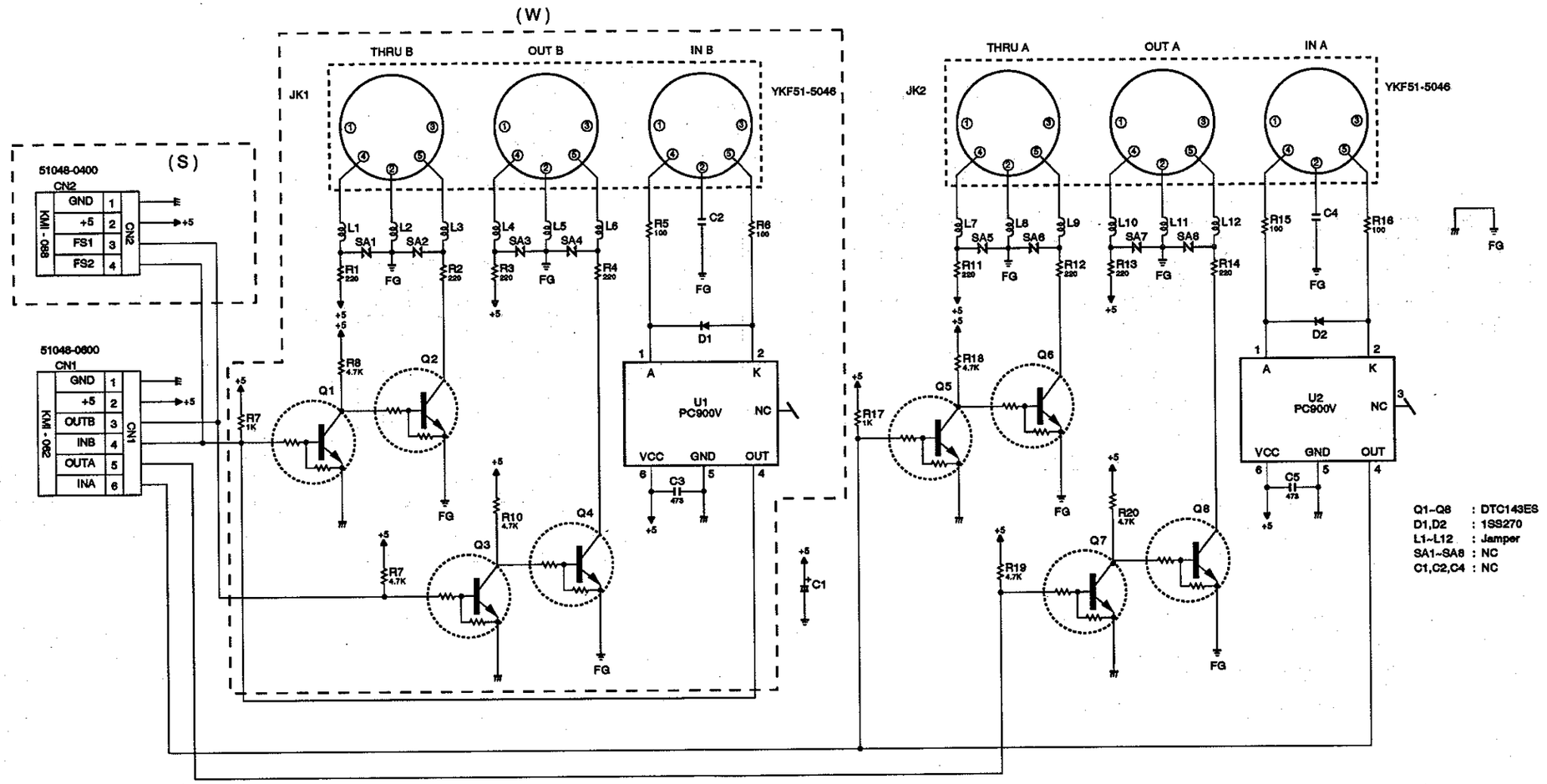

MIDI

42. KMI-079 CIRCUIT

U3,U4 : M5218AP
U5,U6 : M5216P
Q5 ~ Q10 : 2SD1468SR

Q1,Q4 : DTC143ES
Q2 : 2SC1815Y
Q3 : DTB113ZS

TH : PTH8L07BD100N2B550

D1 ~ D6 : 1SS270

L1 ~ L5 : Janmper
L6 ~ L9 : Janmper

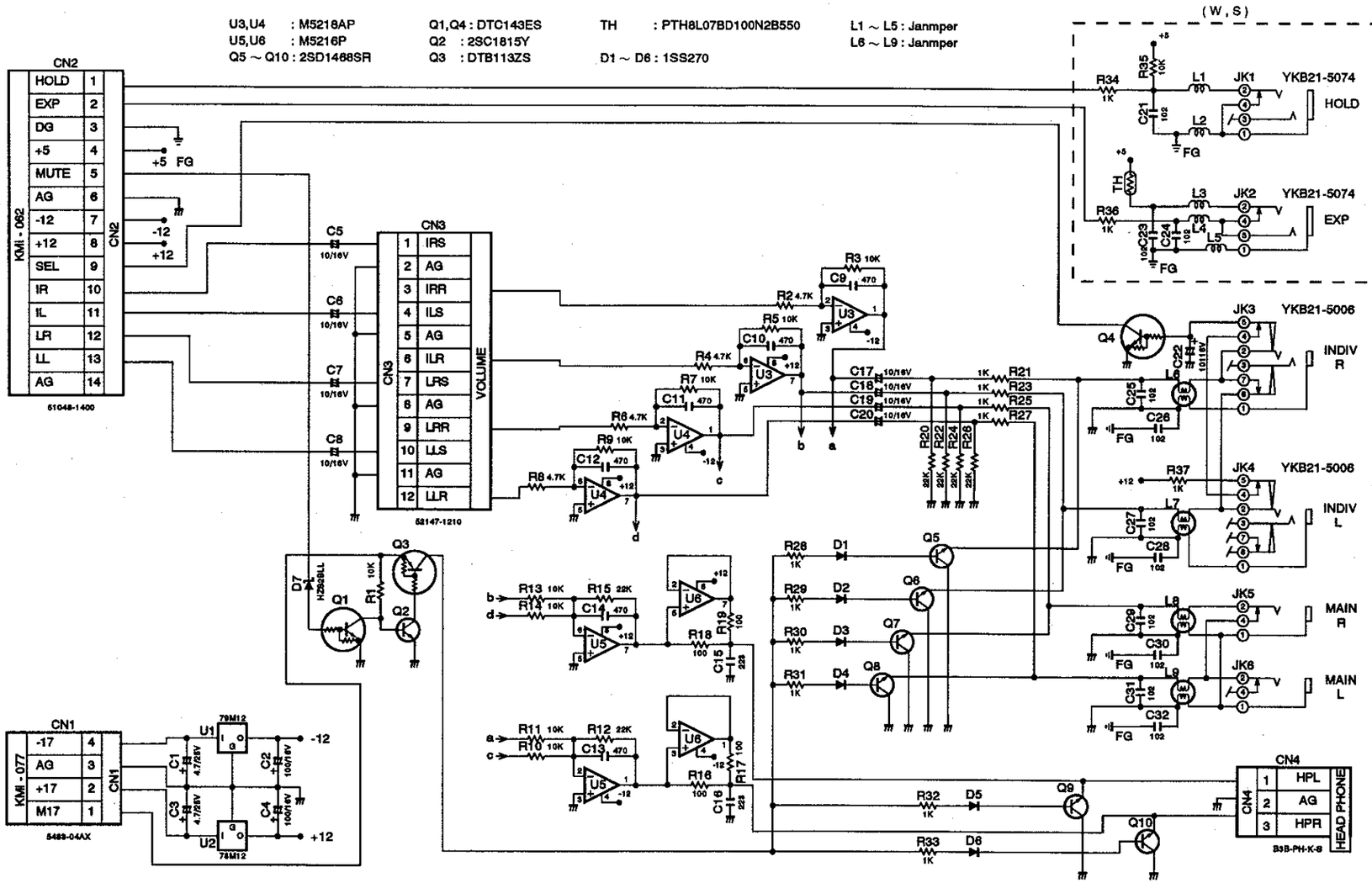

ANALOG

SE620E- L 9612
Printed in Japan