MUSIC WORKSTATION
KRONOS
-61/73/88
SERVICE MANUAL

TABLE OF CONTENTS

ASSEMBLY SKETCH : 2
BLOCK DIAGRAM: 7
SCHEMATIC DIAGRAM: 8
TEST MODE:26
PARTS LIST: 37
APPENDIX
1. PSoC System loading: 40
2. Notes in assembly: 41
3. Add LCD Spacer (73/88): 52

KORG

Issued: June 30, 2011
Ver. 1.0

©2011 KORG INC.

KRONOS-61 (X-09130)
KRONOS-73 (X-09131)
KRONOS-88 (X-09132)

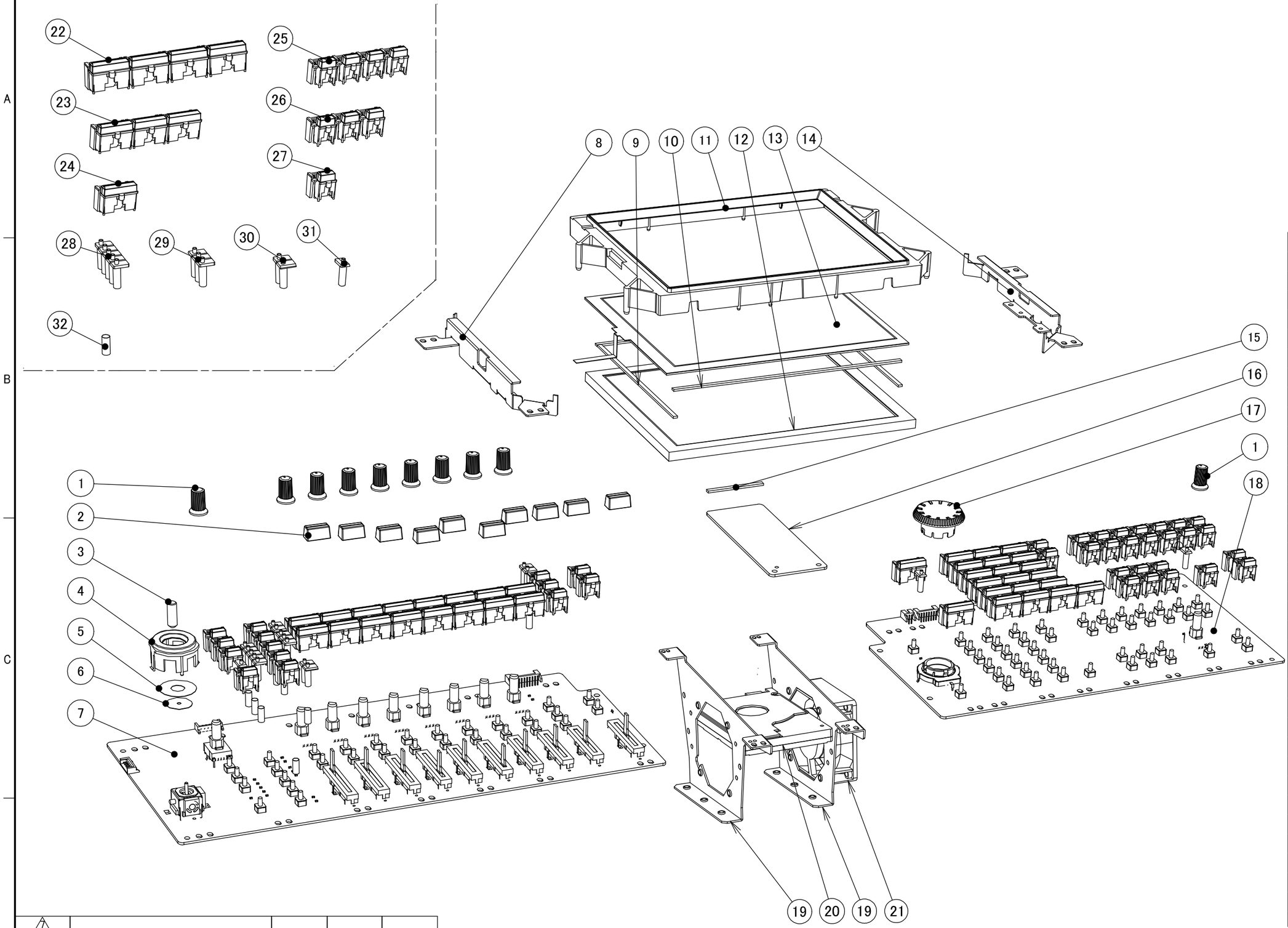

No.	Parts Name	Qty.
35		
34		
33		
32	IRRAX Tube A-4.0 black L=10mm	8
31	09130 Reflector-1 E40804-1	3
30	09130 Reflector-2 E40804-2	3
29	09130 Reflector-3 E40804-3	1
28	09130 Reflector-5 E40804-5	1
27	09130 Key-S-1 E40802-1	19
26	09130 Key-S-3 E40802-3	4
25	09130 Key-S-4 E40802-4	2
24	09130 Key-L-1 E40803-1	2
23	09130 Key-L-3 E40803-3	4
22	09130 Key-L-4 E40803-4	6
21	Fan	1
20	SSD	1
19	09130 PanelAngle C30850	2
18	KLM-3004 (Panel-R)	1
17	09130 EncoderKnob E40800	1
16	KLM-3007 (LCD I/F)	1
15	TouchPanelTape-L F41638-1	1/4
14	09130 LCDSupport-R C30847-2	1
13	TouchPanel	1
12	LCD	1
11	09130 LCDHood E30575	1
10	TouchPanelTape-L F41638-1	2
9	TouchPanelTape-S F41638-2	2
8	09130 LCDSupport-L C30847-1	1
7	KLM-3003 (Panel_L)	1
6	09130 VJSSheet-S F41628	1
5	09130 VJSSheet-L F41627	1
4	09130 VJSFrame E40801	1
3	09130 VJSKnob C41705	1
2	09130 SVRKnob-B/G E40805-2	10
1	X5870 VRKnob(H) E30459-1	10

REVISAL MARK	REVISAL REASON	REVISAL DATE	REVISED BY	APPROVED
7				
6				
5				
4				
3				
2				
1				

WEIGHT: ***(g)	DRAWN	CHECKED	APPROVED	TITLE
	morihara 2011/04/22			Service Manual (01)
KORG KORG INC.			SCALE Free	DRAWING No.

この図面 及び この図面にて作製された物品に対し守秘義務を厳守して下さい。Do not disclose this drawing and goods based on this drawing to 3rd parties.

A3

KRONOS-61 (X-09130)
~~KRONOS-73 (X=09131)~~
~~KRONOS-88 (X=09132)~~

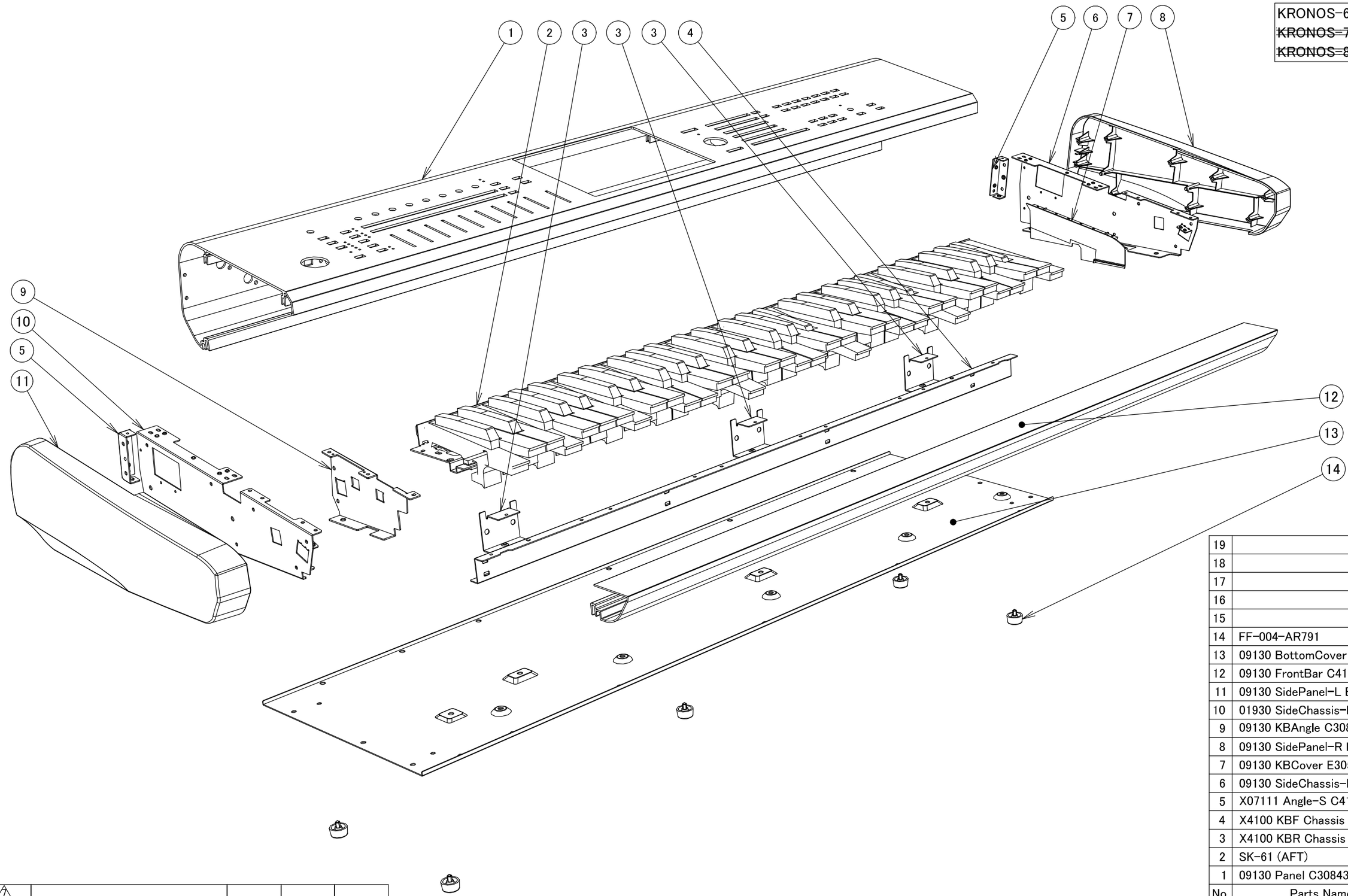

No.	Parts Name	Qty.
19		
18		
17		
16		
15		
14	FF-004-AR791	5
13	09130 BottomCover C20467	1
12	09130 FrontBar C41697	1
11	09130 SidePanel-L E30572-1	1
10	01930 SideChassis-L C30849-1	1
9	09130 KBAngle C30846-1	1
8	09130 SidePanel-R E30572-2	1
7	09130 KBCover E30579	1
6	09130 SideChassis-R C30849-2	1
5	X07111 Angle-S C41573	2
4	X4100 KBF Chassis C30735	1
3	X4100 KBR Chassis C41487	3
2	SK-61 (AFT)	1
1	09130 Panel C30843	1
No.	Parts Name	Qty.

REVISAL MARK	REVISAL REASON	REVISAL DATE	REVISED BY	APPROVED
7				
6				
5				
4				
3				
2				
1				

WEIGHT: ***(g)	DRAWN	CHECKED	APPROVED	TITLE
	morihara 2011/04/22			Service Manual (02)
KORG KORG INC.			SCALE 1:1	DRAWING No.

この図面 及び この図面にて作製された物品に対し守秘義務を厳守して下さい。Do not disclose this drawing and goods based on this drawing to 3rd parties.

A3

~~KRONOS-61 (X-09130)~~
KRONOS-73 (X-09131)
~~KRONOS-88 (X-09132)~~

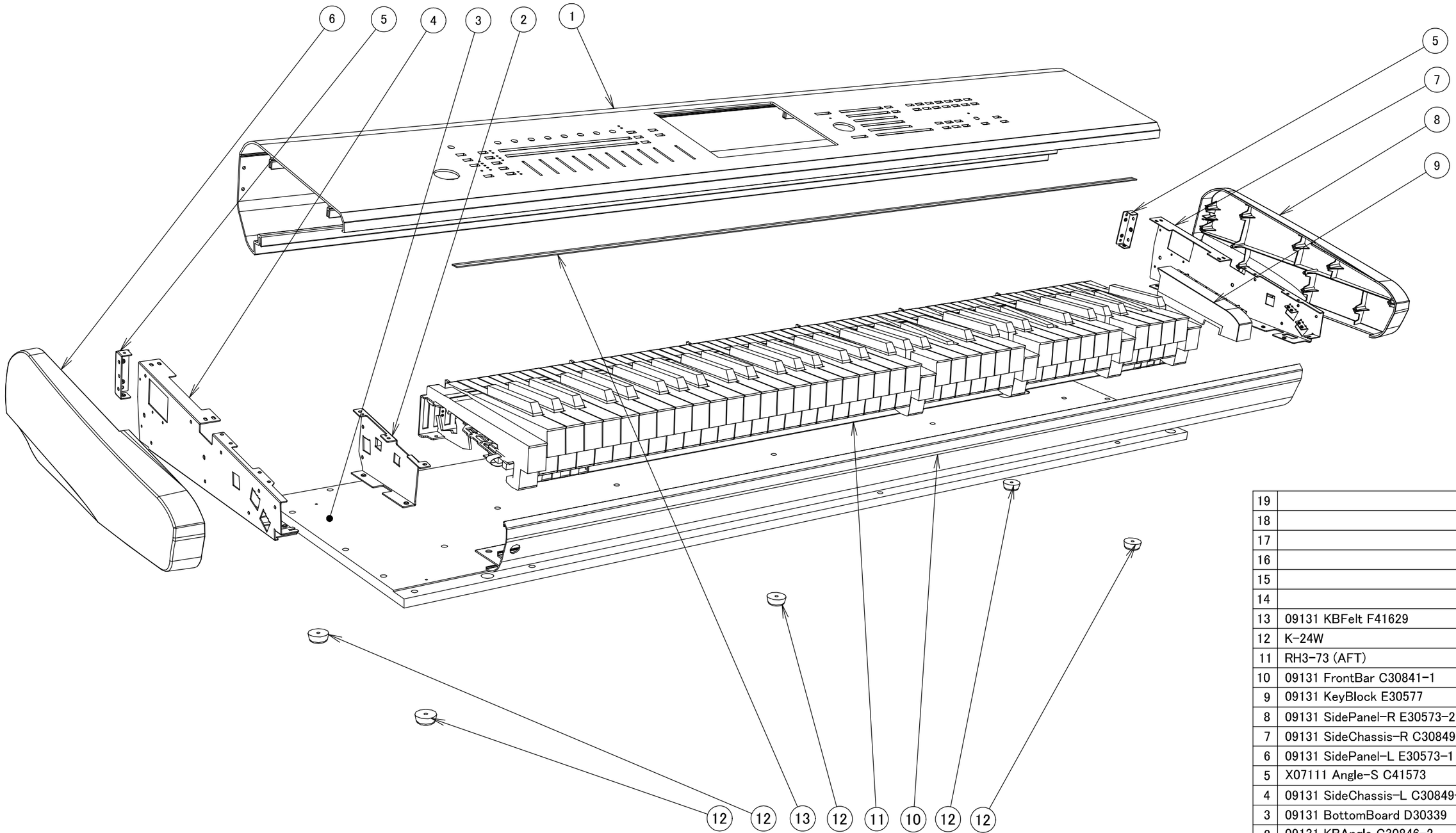

No.	Parts Name	Qty.
19		
18		
17		
16		
15		
14		
13	09131 KBFelt F41629	1
12	K-24W	5
11	RH3-73 (AFT)	1
10	09131 FrontBar C30841-1	1
9	09131 KeyBlock E30577	1
8	09131 SidePanel-R E30573-2	1
7	09131 SideChassis-R C30849-4	1
6	09131 SidePanel-L E30573-1	1
5	X07111 Angle-S C41573	2
4	09131 SideChassis-L C30849-3	1
3	09131 BottomBoard D30339	1
2	09131 KBAngle C30846-2	1
1	09131 Panel C30844	1

REVISAL MARK	REVISAL REASON	REVISAL DATE	REVISED BY	APPROVED
7				
6				
5				
4				
3				
2				
1				

WEIGHT: ***(g)	DRAWN	CHECKED	APPROVED	TITLE
	morihara 2011/04/22			Service Manual (03)
KORG KORG INC.			SCALE Free	DRAWING No.

この図面 及び この図面にて作製された物品に対し守秘義務を厳守して下さい。Do not disclose this drawing and goods based on this drawing to 3rd parties.

A3

~~KRONOS=61 (X=09130)~~
~~KRONOS=73 (X=09131)~~
KRONOS-88 (X-09132)

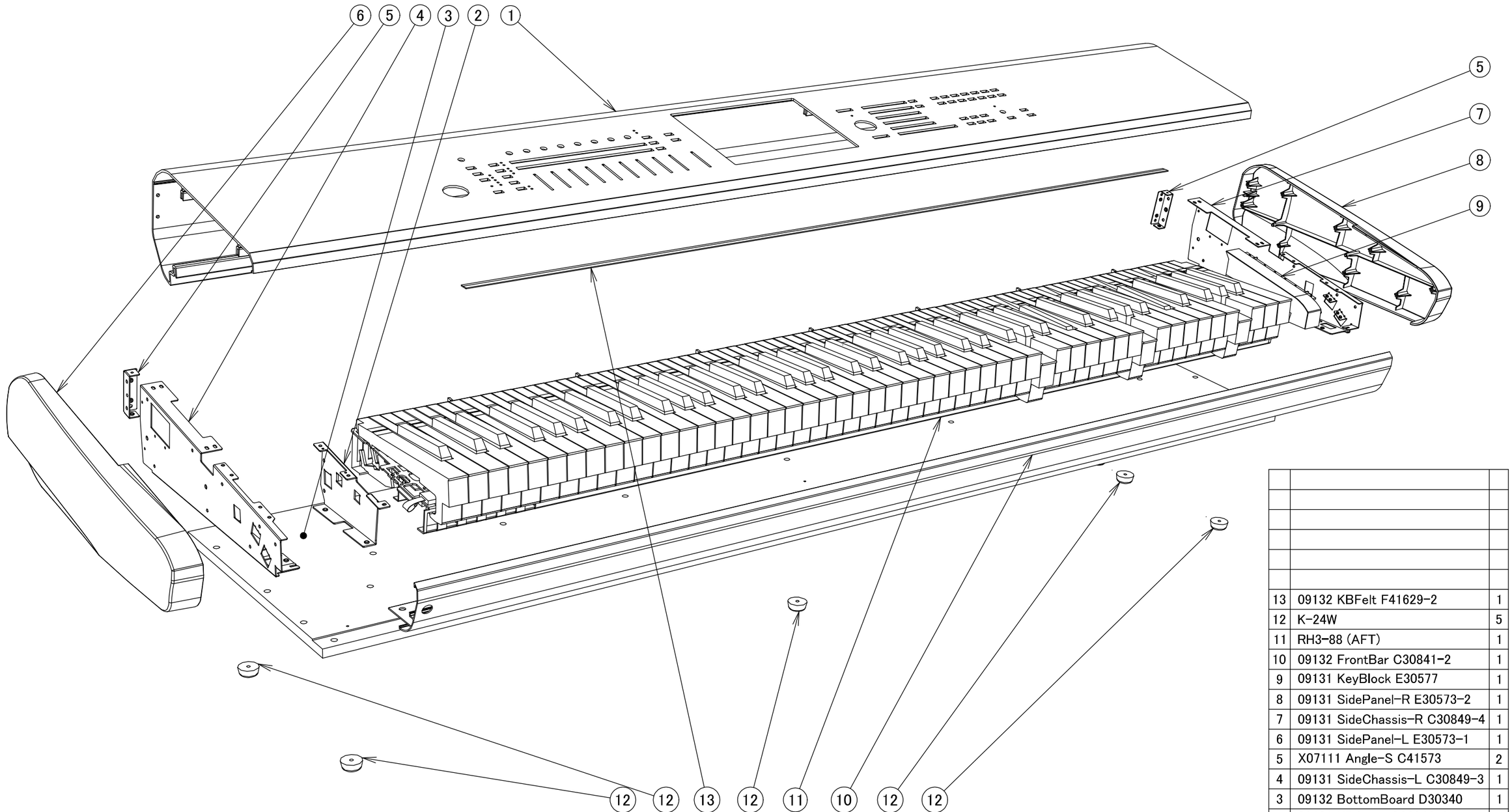

No.	Parts Name	Qty.
13	09132 KBFelt F41629-2	1
12	K-24W	5
11	RH3-88 (AFT)	1
10	09132 FrontBar C30841-2	1
9	09131 KeyBlock E30577	1
8	09131 SidePanel-R E30573-2	1
7	09131 SideChassis-R C30849-4	1
6	09131 SidePanel-L E30573-1	1
5	X07111 Angle-S C41573	2
4	09131 SideChassis-L C30849-3	1
3	09132 BottomBoard D30340	1
2	09131 KBAngle C30846-2	1
1	09132 Panel C30845	1

REVISAL MARK	REVISAL REASON	REVISAL DATE	REVISED BY	APPROVED
7				
6				
5				
4				
3				
2				
1				

WEIGHT: ***(g)	DRAWN	CHECKED	APPROVED	TITLE
	morihara 2011/04/26			Service Manual (04)
KORG KORG INC.			SCALE Free	DRAWING No.

この図面 及び この図面にて作製された物品に対し守秘義務を厳守して下さい。Do not disclose this drawing and goods based on this drawing to 3rd parties.

A3

KRONOS-61(X-09130)
~~KRONOS-73(X-09131)~~
~~KRONOS-88(X-09132)~~

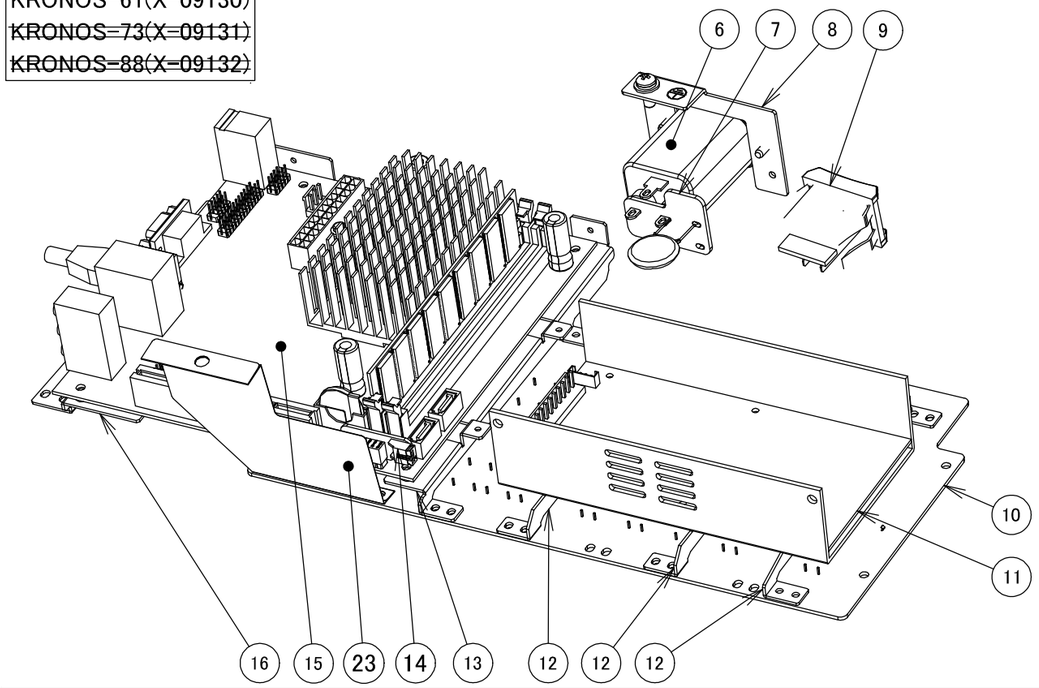

~~KRONOS-61(X-09130)~~
KRONOS-73(X-09131)
KRONOS-88(X-09132)

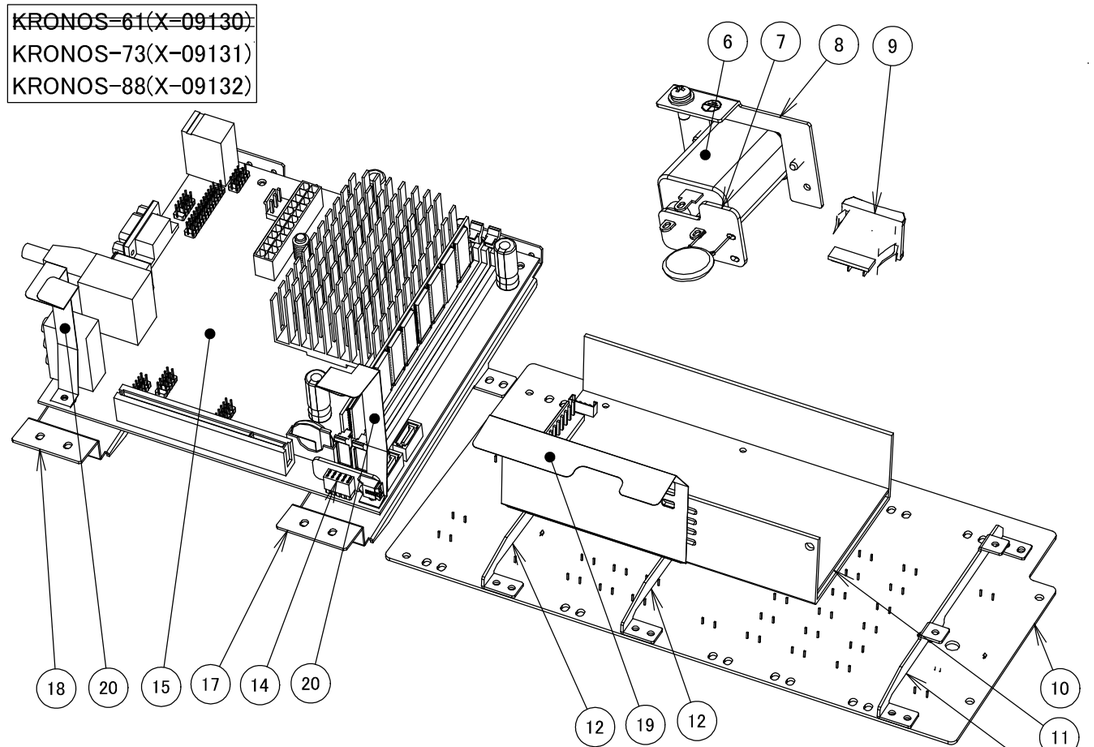

KRONOS-61(X-09130)
KRONOS-73(X-09131)
KRONOS-88(X-09132)

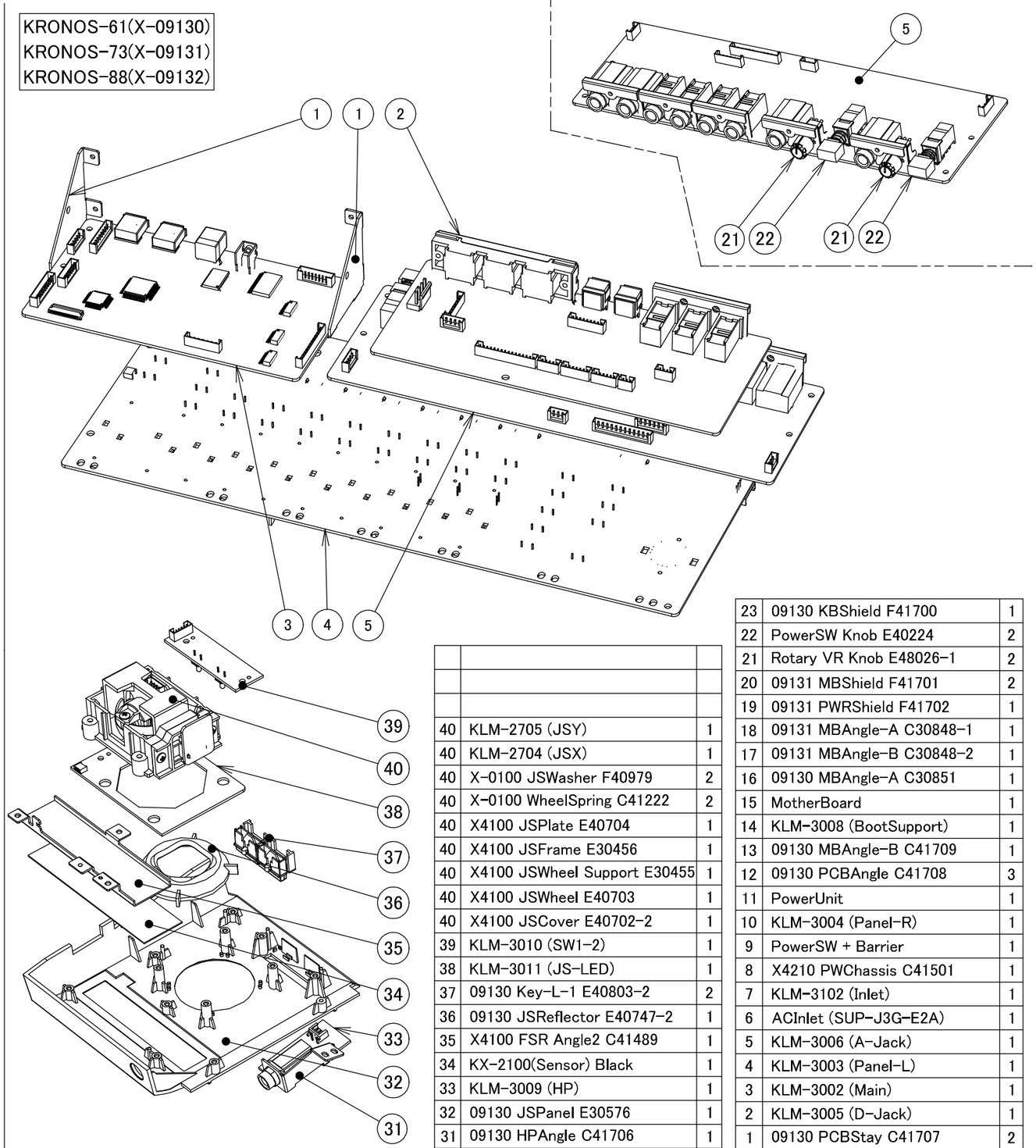

40	KLM-2705 (JSY)	1
40	KLM-2704 (JSX)	1
40	X-0100 JSWasher F40979	2
40	X-0100 WheelSpring C41222	2
40	X4100 JSPlate E40704	1
40	X4100 JSFrame E30456	1
40	X4100 JSWheel Support E30455	1
40	X4100 JSWheel E40703	1
40	X4100 JSCover E40702-2	1
39	KLM-3010 (SW1-2)	1
38	KLM-3011 (JS-LED)	1
37	09130 Key-L-1 E40803-2	2
36	09130 JSReflector E40747-2	1
35	X4100 FSR Angle2 C41489	1
34	KX-2100(Sensor) Black	1
33	KLM-3009 (HP)	1
32	09130 JSPanel E30576	1
31	09130 HPAngle C41706	1
No.	Parts Name	Qty.

23	09130 KBShield F41700	1
22	PowerSW Knob E40224	2
21	Rotary VR Knob E48026-1	2
20	09131 MBShield F41701	2
19	09131 PWRShield F41702	1
18	09131 MBAngle-A C30848-1	1
17	09131 MBAngle-B C30848-2	1
16	09130 MBAngle-A C30851	1
15	MotherBoard	1
14	KLM-3008 (BootSupport)	1
13	09130 MBAngle-B C41709	1
12	09130 PCBAngle C41708	3
11	PowerUnit	1
10	KLM-3004 (Panel-R)	1
9	PowerSW + Barrier	1
8	X4210 PWChassis C41501	1
7	KLM-3102 (Inlet)	1
6	ACInlet (SUP-J3G-E2A)	1
5	KLM-3006 (A-Jack)	1
4	KLM-3003 (Panel-L)	1
3	KLM-3002 (Main)	1
2	KLM-3005 (D-Jack)	1
1	09130 PCBStay C41707	2
No.	Parts Name	Qty.

REVISAL MARK	REVISAL REASON	REVISAL DATE	REVISED BY	APPROVED
7				
6				
5				
4				
3				
2				
1				

WEIGHT: ***(g)	DRAWN	CHECKED	APPROVED	TITLE
	morihara 2011/04/26			Service Manula (05)
KORG KORG INC.			SCALE Free	DRAWING No.

この図面 及び この図面にて作製された物品に対し守秘義務を厳守して下さい。Do not disclose this drawing and goods based on this drawing to 3rd parties.

A3

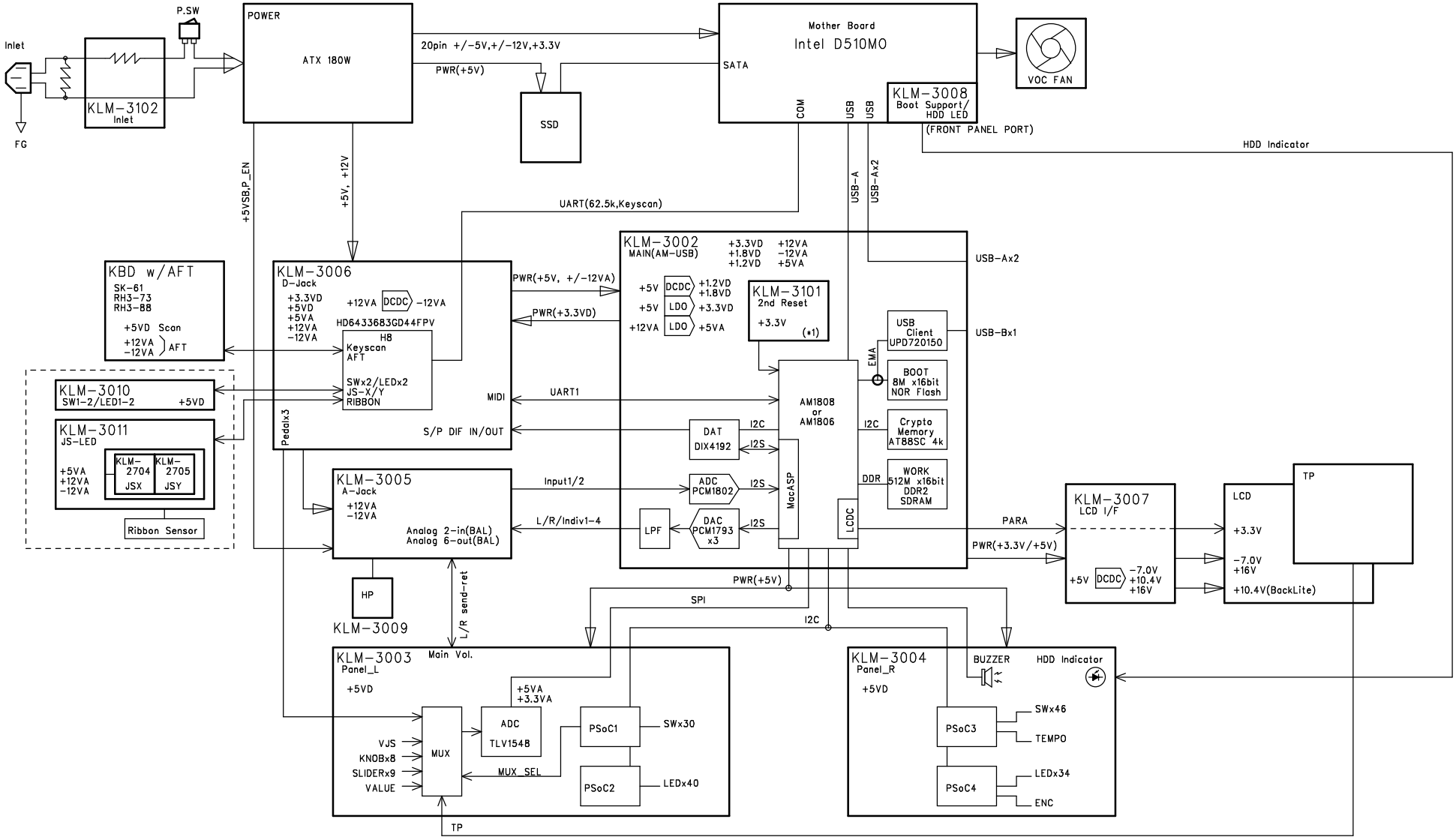

MARK	REVISION REASON	DATE	REVISED BY
△			
△			
△			
△			
△			

(*1) KLM-3101は、J-3,4,5 LOTのみ使用する

(*1) KLM-3101 uses only J-3,4,5 LOT.

DRAWN BY	DESIGNED BY	CHECKED BY	MODEL X-09130/09131/09132
S.Nomura			TITLE Block Diagram
KORG	DRAWING NO. KOD-B30116		DATE '11.01.26

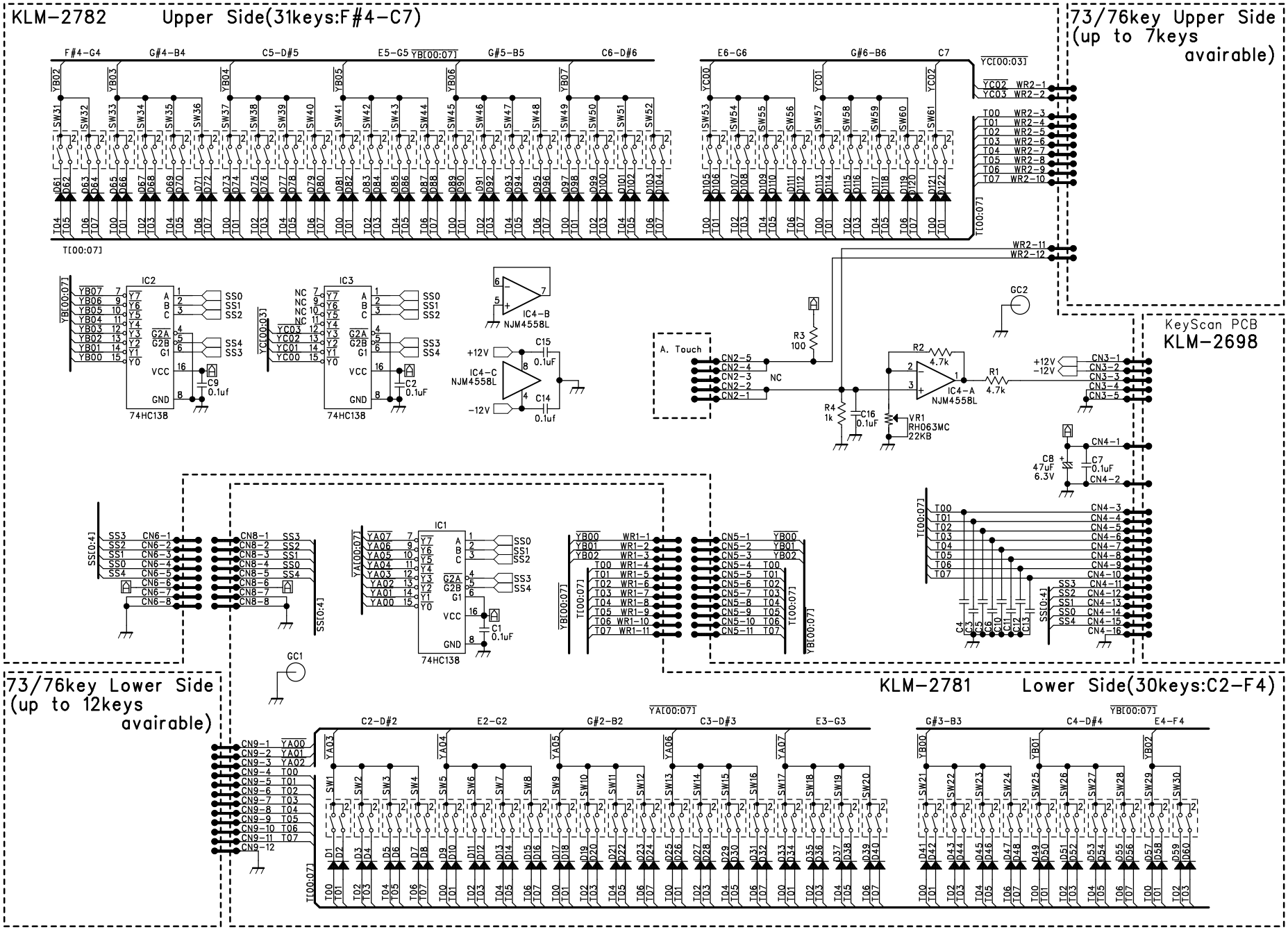

1: First Contact Point
2: Second Contact Point

MARK	REVISION REASON	DATE	REVISED BY
△			
△			
△			
△			
△			

DRAWN BY	DESIGNED BY	CHECKED BY	MODEL Single-61/73/76
S.Nomura	S.Nomura	TAMURA '06.10.23	TITLE Single KBD Share PCB KLM-2781/82 CIRCUIT DIAGRAM

KORG

DRAWING NO. KOD-A30722

DATE 060601

KLM-2946 Upper Side(36keys:F4-E7)

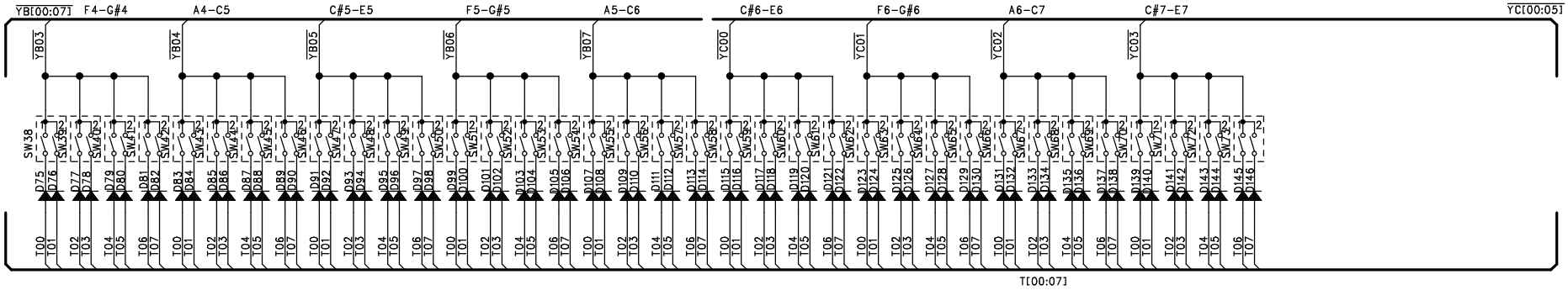

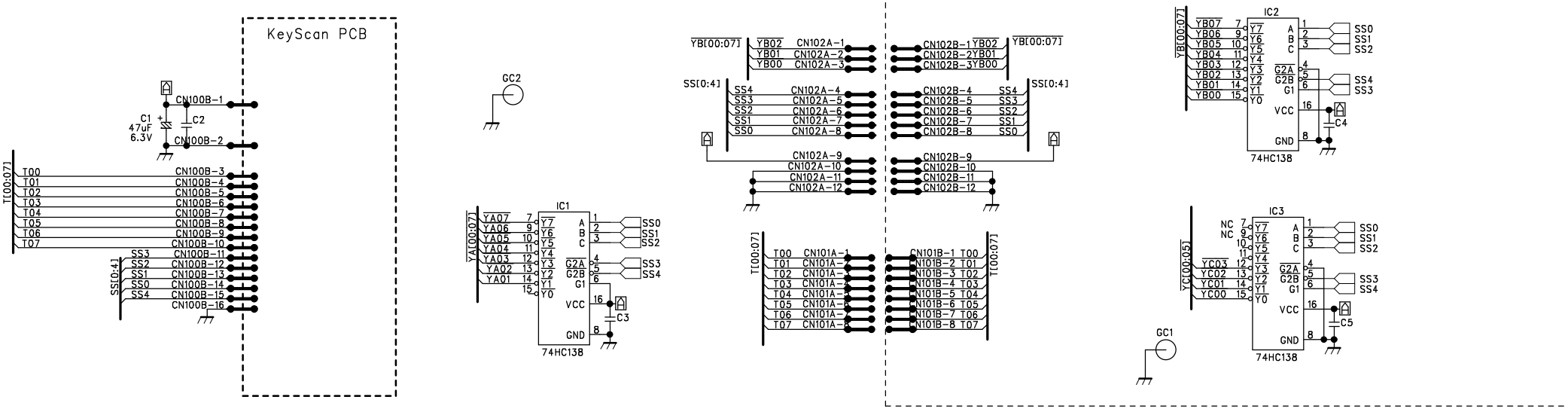

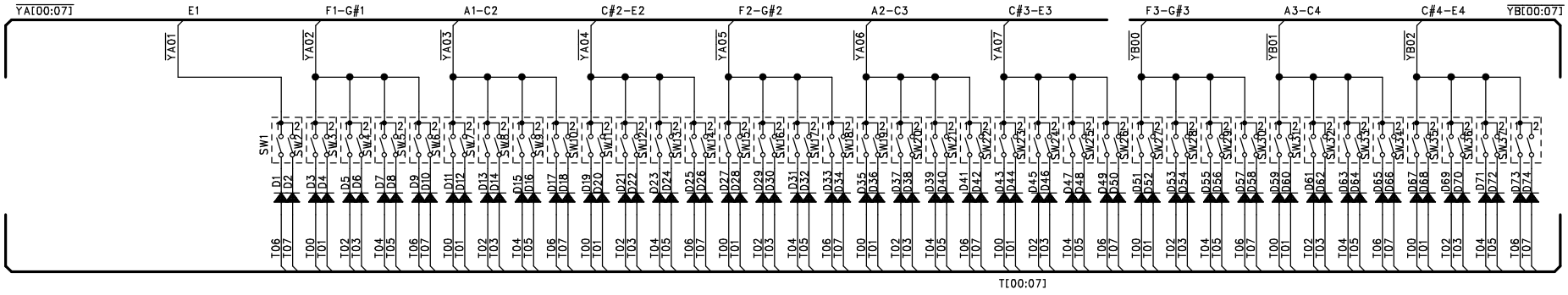

KLM-2945 Lower Side(37keys:E1-E4)

MARK	REVISION REASON	DATE	REVISED BY
△			
△			
△			
△			
△			

1: First Contact Point
2: Second Contact Point

DRAWN BY	DESIGNED BY	CHECKED BY	MODEL RH-3 73key
m.Hoshino	Technics		TITLE RH-3-73 KLM-2945/46 CIRCUIT DIAGRAM

KORG

DRAWING NO. KOD-A30814

DATE 080804

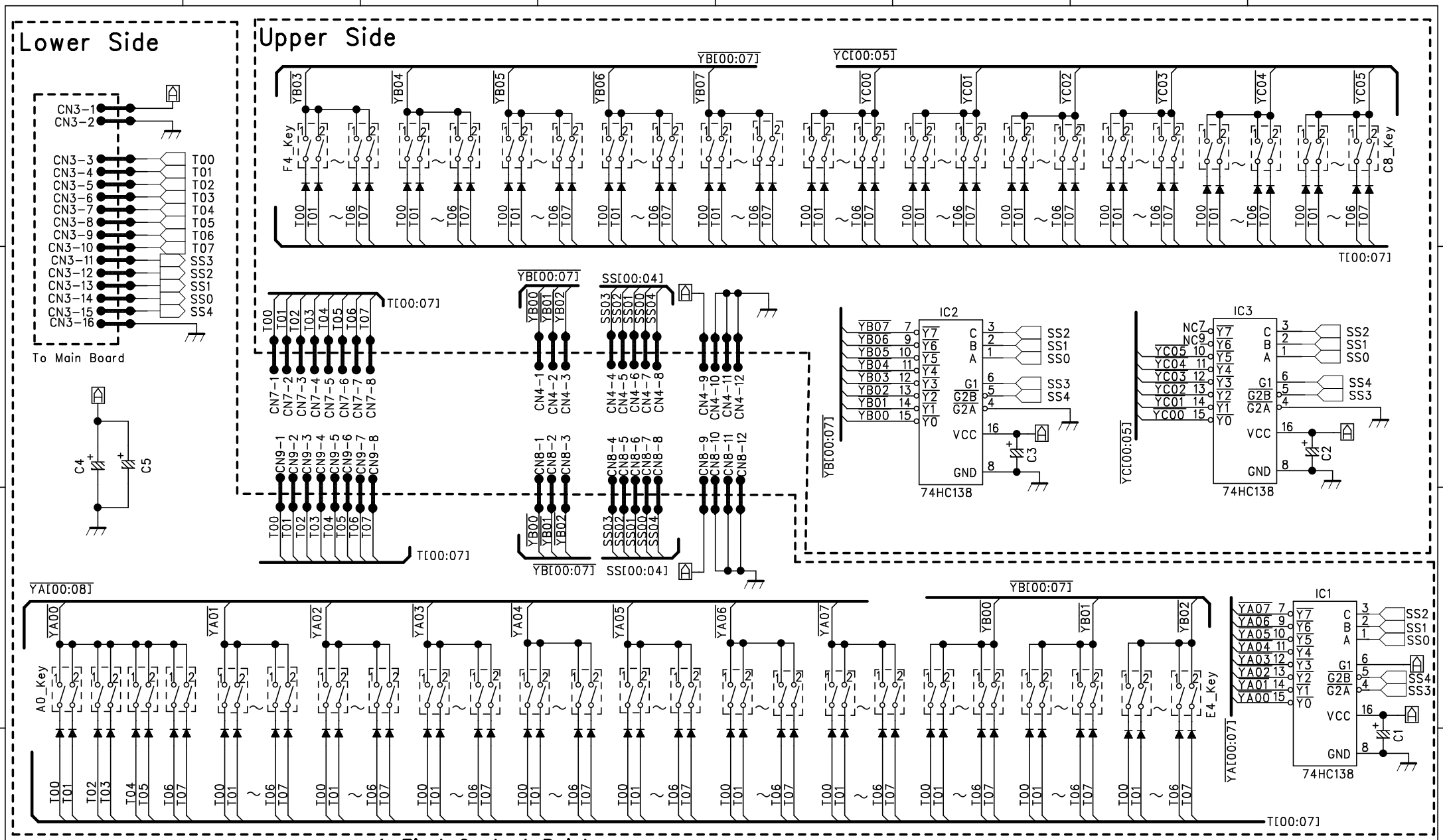

MARK	REVISION REASON	DATE	REVISED BY
△			
△			
△			
△			

DRAWN BY	DESIGNED BY	CHECKED BY	CHECKED BY	MODEL RH-3
Yomogita	Yomogita			TITLE: RH-3 88Key KEYBOARD CIRCUIT DIAGRAM

KORG

DRAWING NO. KOD-A40582

DATE '04.10.12

KEYBOARD RH3B

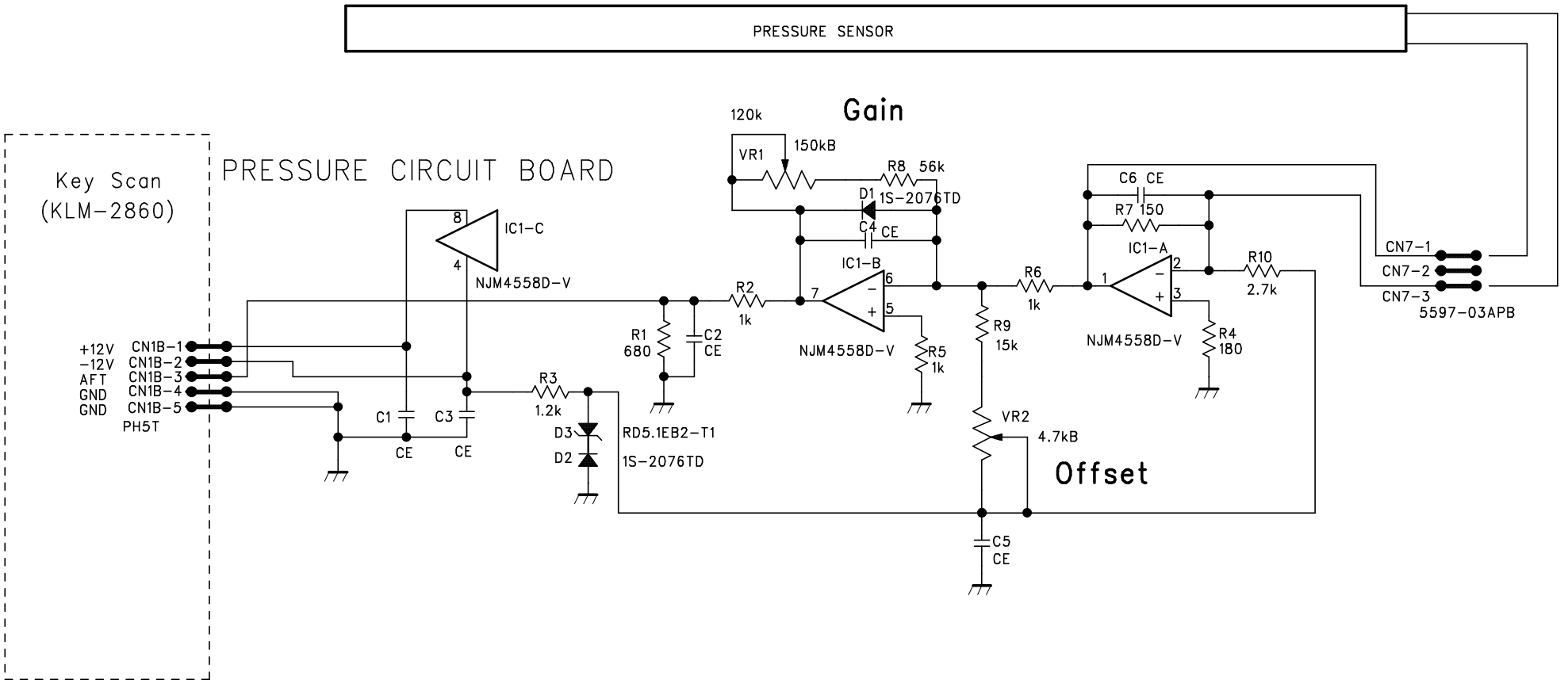

CE: UP050F104Z-A-BZ, 0.1uF

MARK	REVISION REASON	DATE	REVISED BY
△			
△			
△			
△			

DRAWN BY	DESIGNED BY	CHECKED BY	CHECKED BY	MODEL X-4120
S.Kamachi	S.Kamachi			TITLE RH3B KLM-2702 AFTER PCB CIRCUIT DIAGRAM

KORG

DRAWING NO. KOD-A40644

DATE '07.03.14

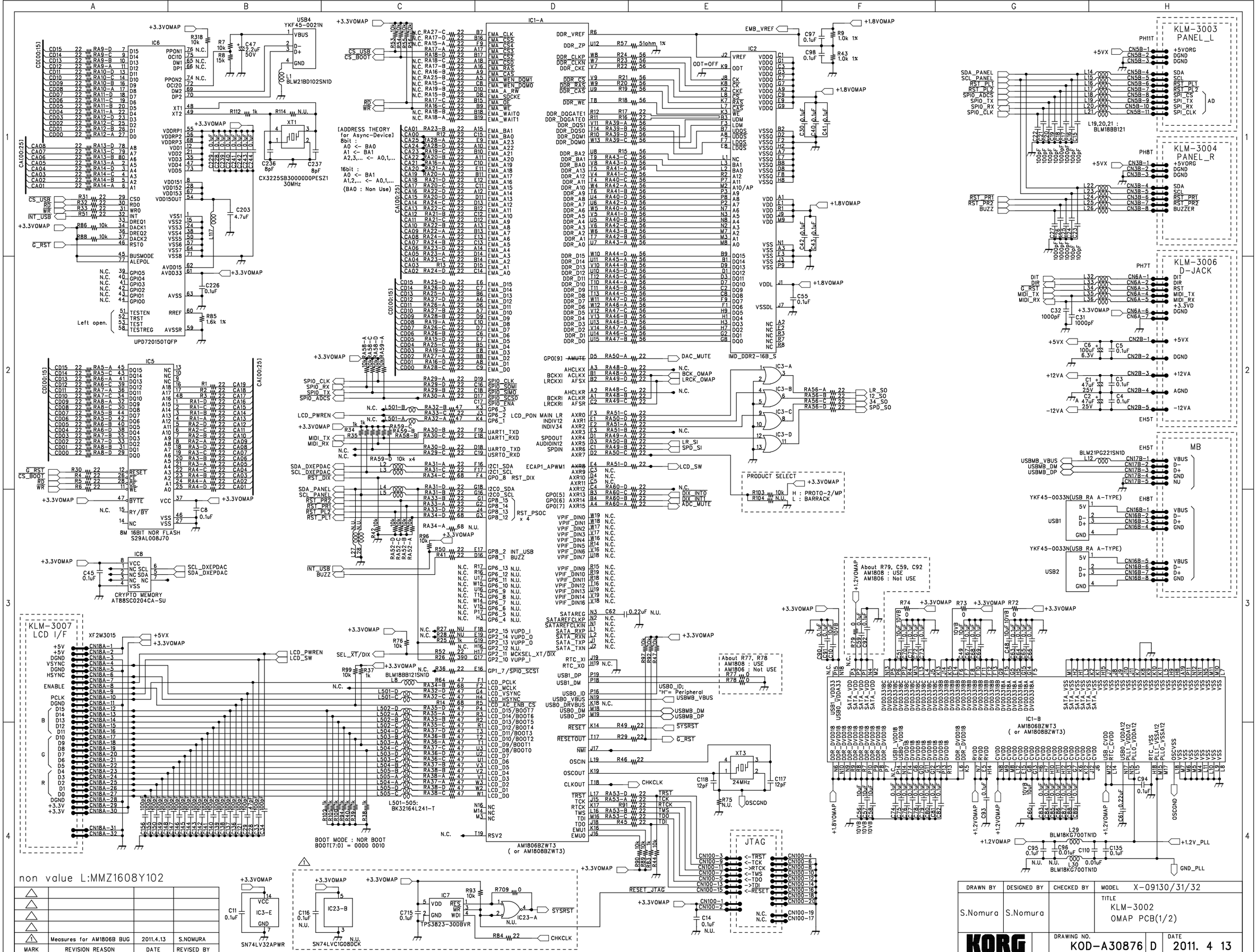

non value L:MMZ1608Y102

MARK	REVISION REASON	DATE	REVISED BY
1	Measures for AM1806B BUG	2011.4.13	S.NOMURA

DRAWN BY	DESIGNED BY	CHECKED BY	MODEL	X-09130/31/32
S.Nomura	S.Nomura		TITLE	KLM-3002 OMAP PCB(1/2)
KORG			DRAWING NO.	KOD-A30876 D
			DATE	2011. 4 13

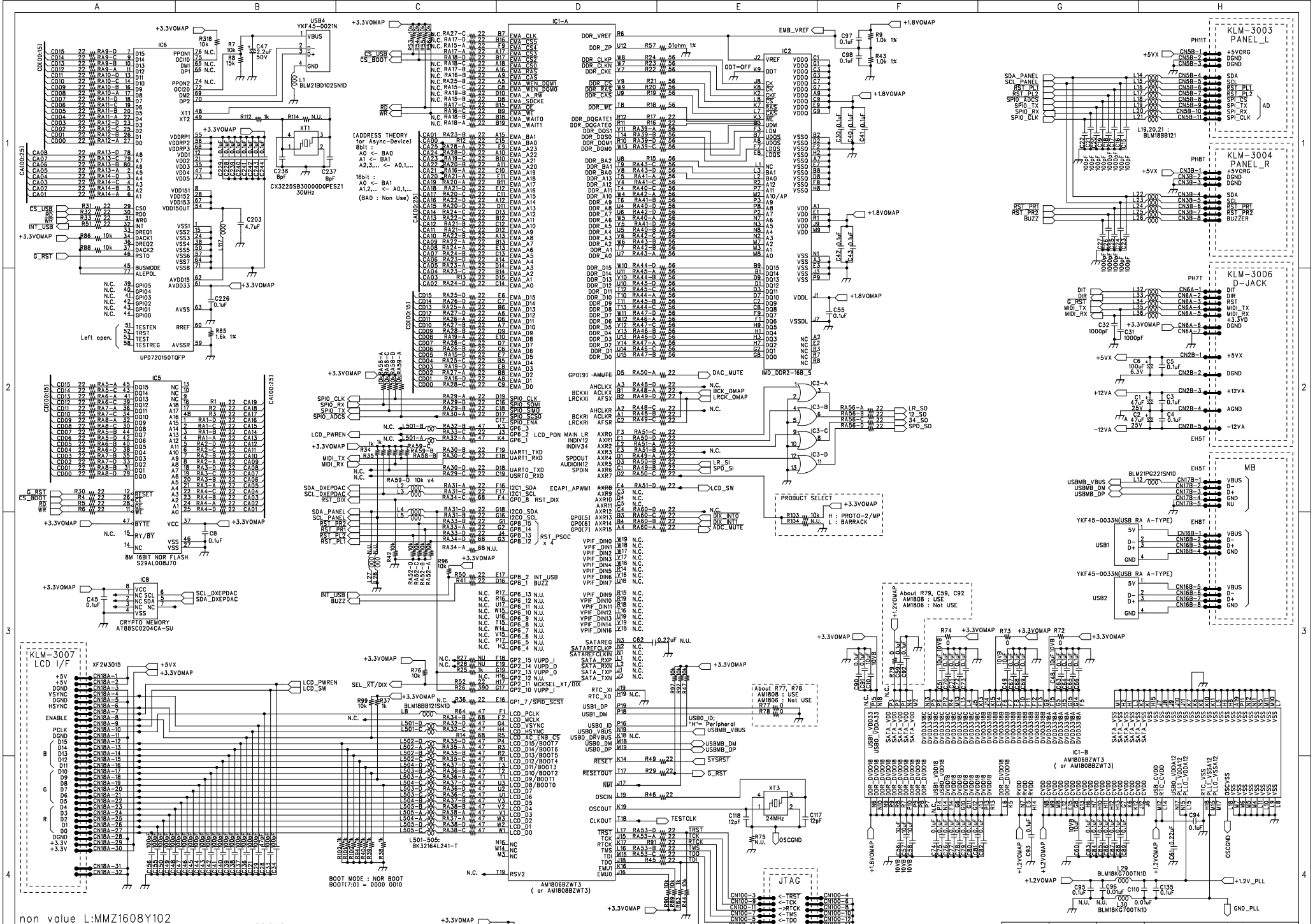

non value L:MMZ1608Y102

MARK	REVISION REASON	DATE	REVISED BY
△			
△			
△			
△			
△			

DESIGNED BY	CHECKED BY	APPROVED BY	MODEL X-09130/31/32
S.Nomura	DRAGON	Masato Adachi	TITLE KLM-3002 OMAP PCB(1/2)

KORG

DRAWING NO.		DATE
KOD-A30876	C	2011. 2. 1

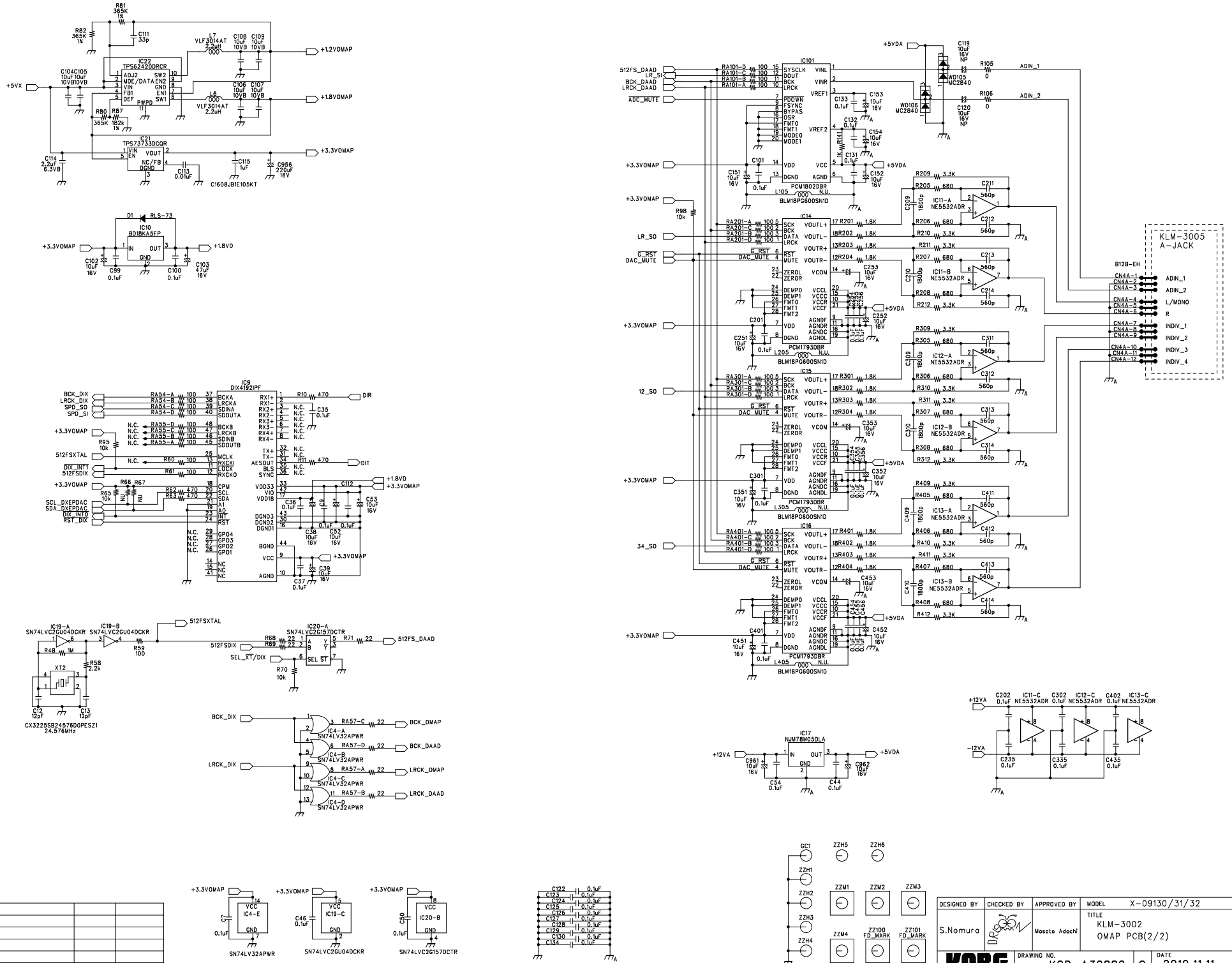

MARK	REVISION REASON	DATE	REVISED BY
△			
△			
△			
△			
△			

DESIGNED BY	CHECKED BY	APPROVED BY	MODEL
S.Nomura	DR	Masato Adachi	X-09130/31/32

TITLE: KLM-3002 OMAP PCB(2/2)

KORG | DRAWING NO. KOD-A30882 | C | DATE 2010.11.11

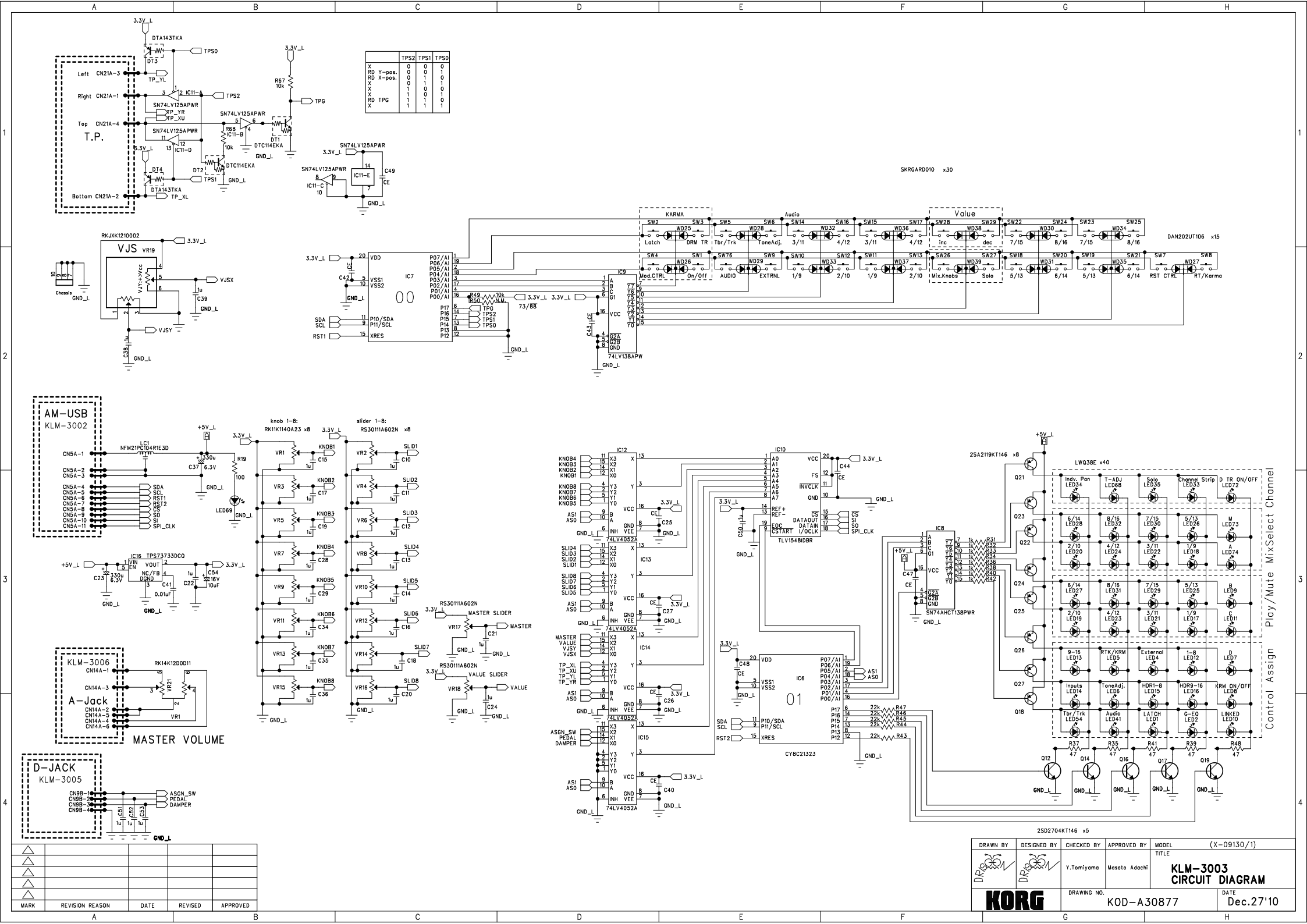

	TPS2	TPS1	TPS0
X	0	0	0
RD Y-pos.	0	0	1
RD X-pos.	0	1	0
X	0	1	1
X	1	0	0
X	1	0	1
RD TPG	1	1	0
X	1	1	1

MARK	REVISION REASON	DATE	REVISED	APPROVED
△				
△				
△				
△				
△				

DRAWN BY	DESIGNED BY	CHECKED BY	APPROVED BY	MODEL (X-09130/1)
DRIGON	DRIGON	Y.Tomiyama	Masato Adachi	TITLE: KLM-3003 CIRCUIT DIAGRAM

KORG

DRAWING NO. KOD-A30877

DATE Dec.27'10

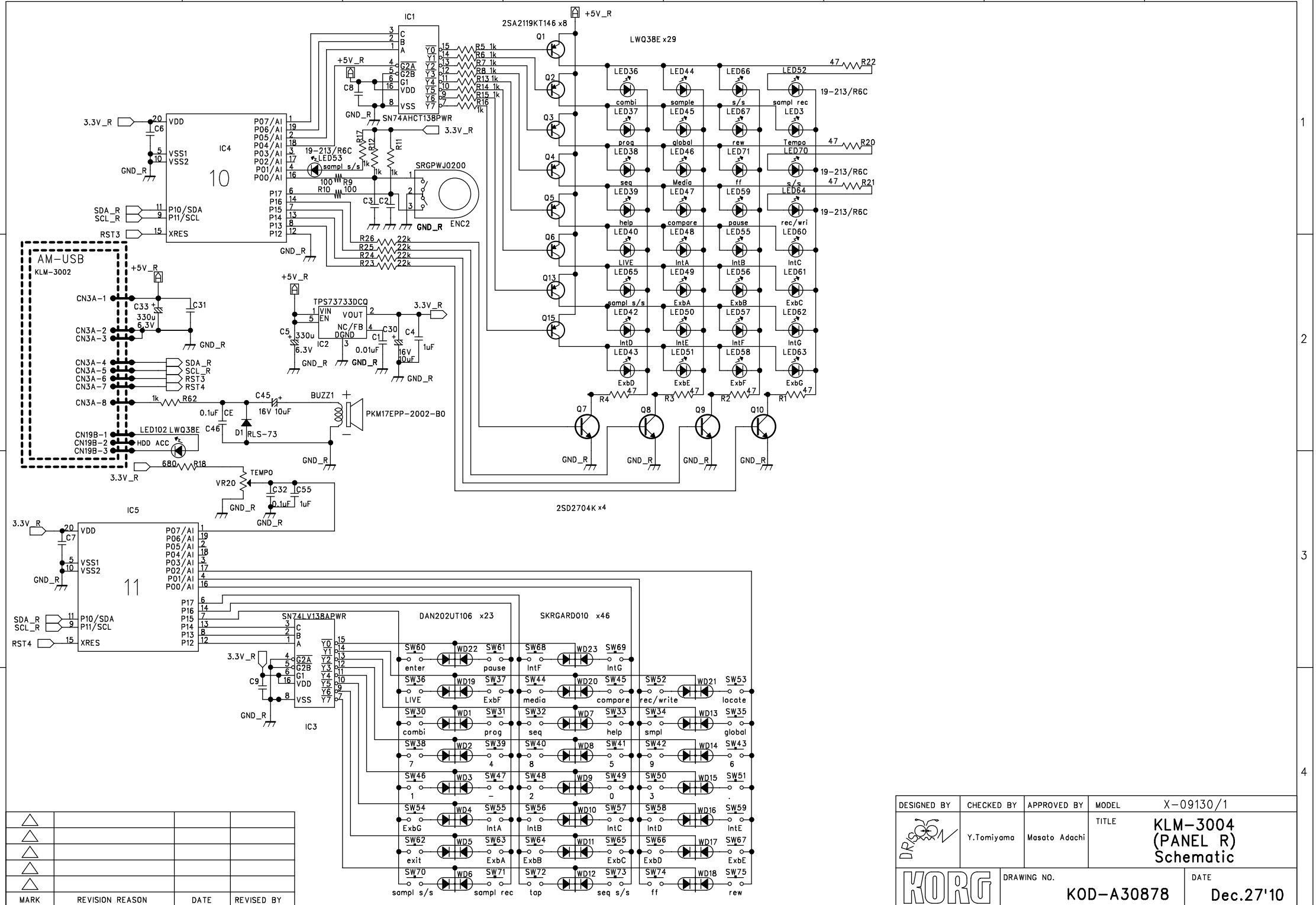

MARK	REVISION REASON	DATE	REVISED BY
△			
△			
△			
△			
△			

DESIGNED BY	CHECKED BY	APPROVED BY	MODEL
DRSON	Y.Tomiyama	Masato Adachi	X-09130/1

TITLE: KLM-3004 (PANEL R) Schematic

KORG

DRAWING NO.: KOD-A30878

DATE: Dec.27'10

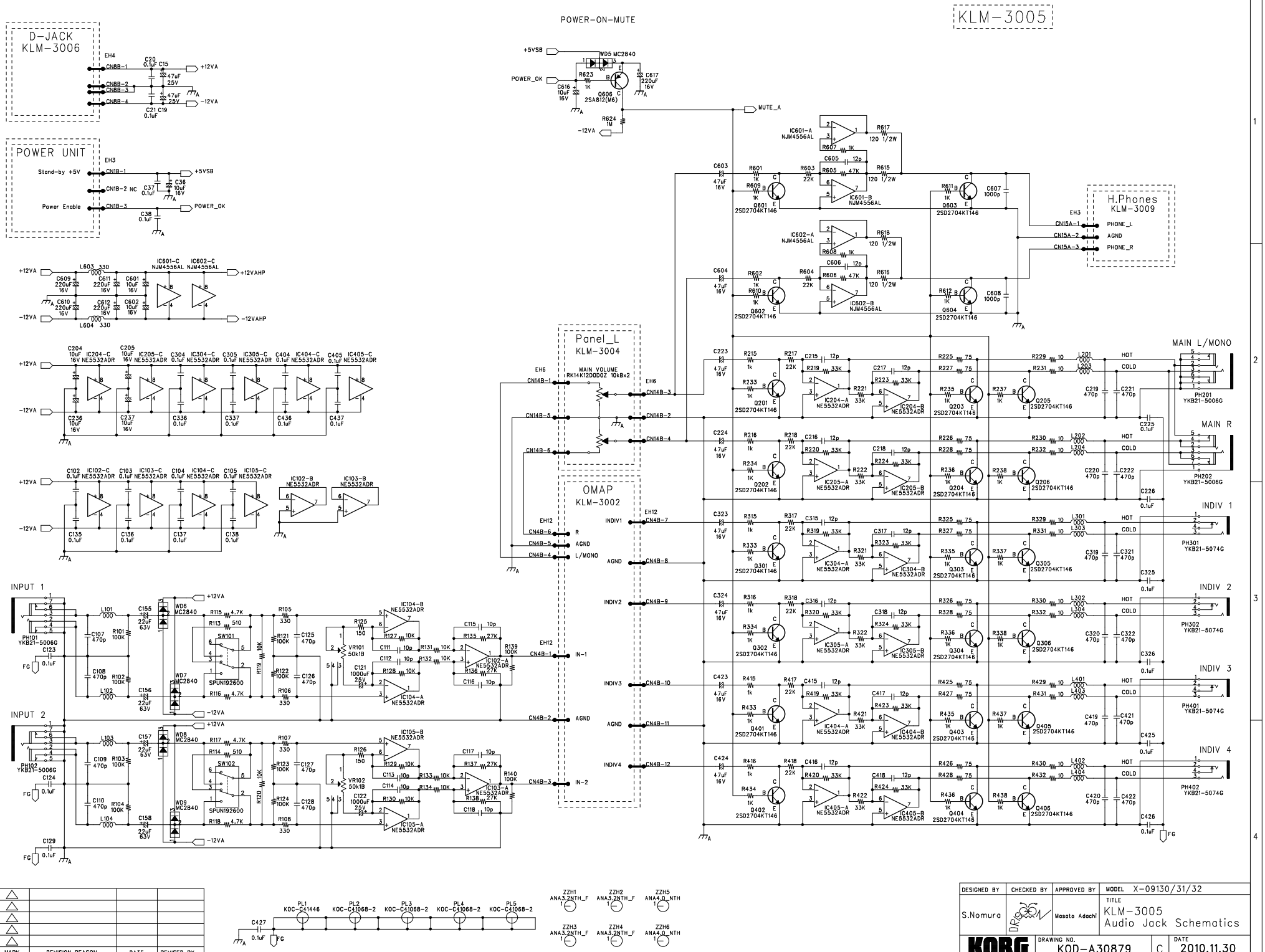
KLM-3005
POWER-ON-MUTE
D-JACK
KLM-3006
POWER UNIT
Stand-by +5V
Power Enable
+5VSB
POWER_OK
MUTE_A
H.Phones
KLM-3009
PHONE_L
AGND
PHONE_R
Panel_L
KLM-3004
MAIN VOLUME
RK14K12D0D0Z 10kB×2
OMAP
KLM-3002
INDIV1
INDIV2
INDIV3
INDIV4
IN-1
IN-2
MAIN L/MONO
MAIN R
INDIV 1
INDIV 2
INDIV 3
INDIV 4
INPUT 1
INPUT 2
DESIGNED BY
S.Nomura
CHECKED BY
APPROVED BY
Masato Adachi
MODEL X-09130/31/32
TITLE
KLM-3005
Audio Jack Schematics
KORG
DRAWING NO.
KOD-A30879
C
DATE
2010.11.30
MARK
REVISION REASON
DATE
REVISED BY

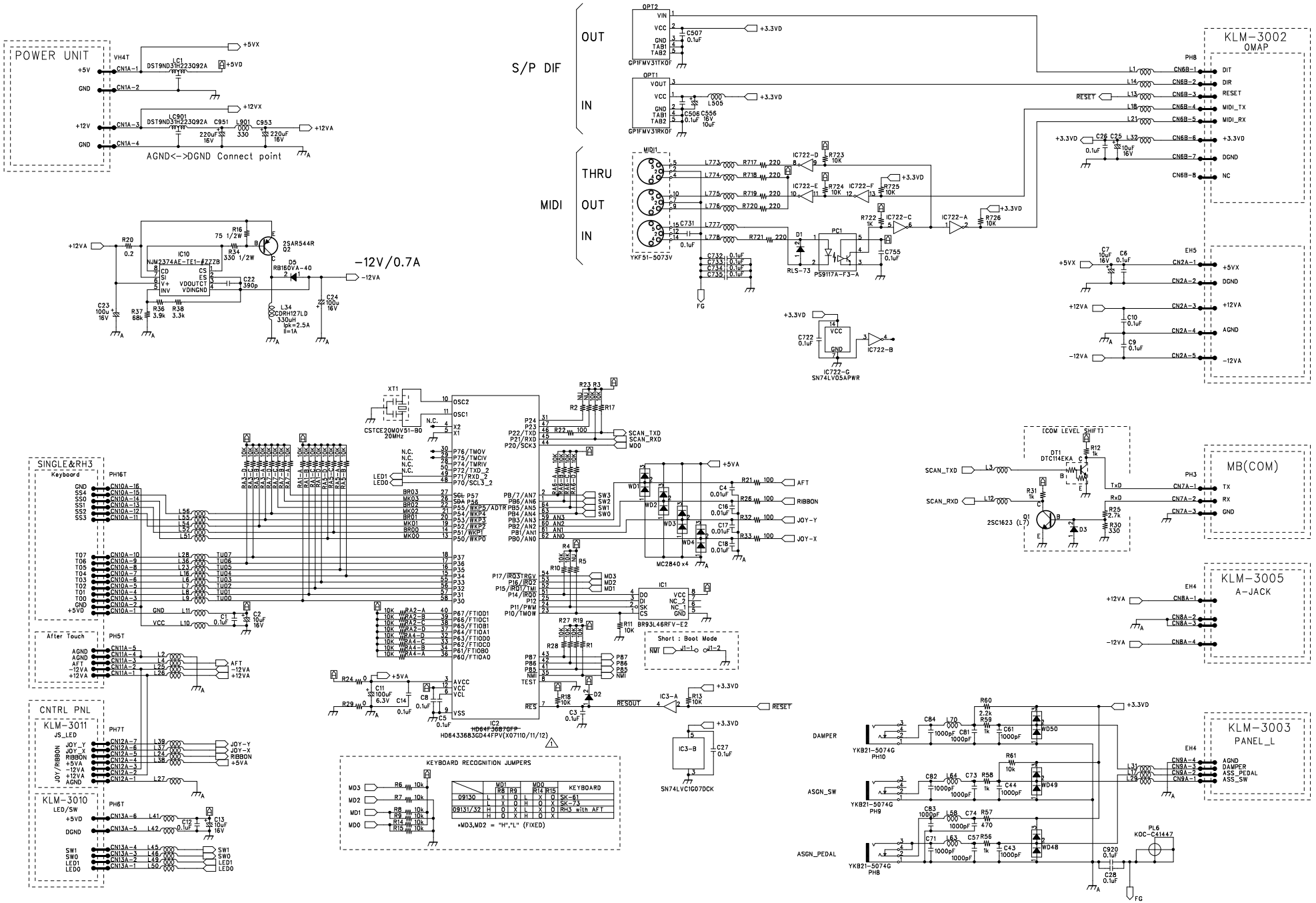

MARK	REVISION REASON	DATE	REVISED BY
1	Reviced part name	2011.4.27	S.NOMURA

DESIGNED BY	CHECKED BY	APPROVED BY	MODEL
S.Nomura	DR	Masato Adachi	X-09130/31/32

TITLE: KLM-3006 Digital Jack Schematics

KORG | DRAWING NO. KOD-A30880 | C | DATE 2011.4.27

Non Marked L:MMZ1608Y102BT

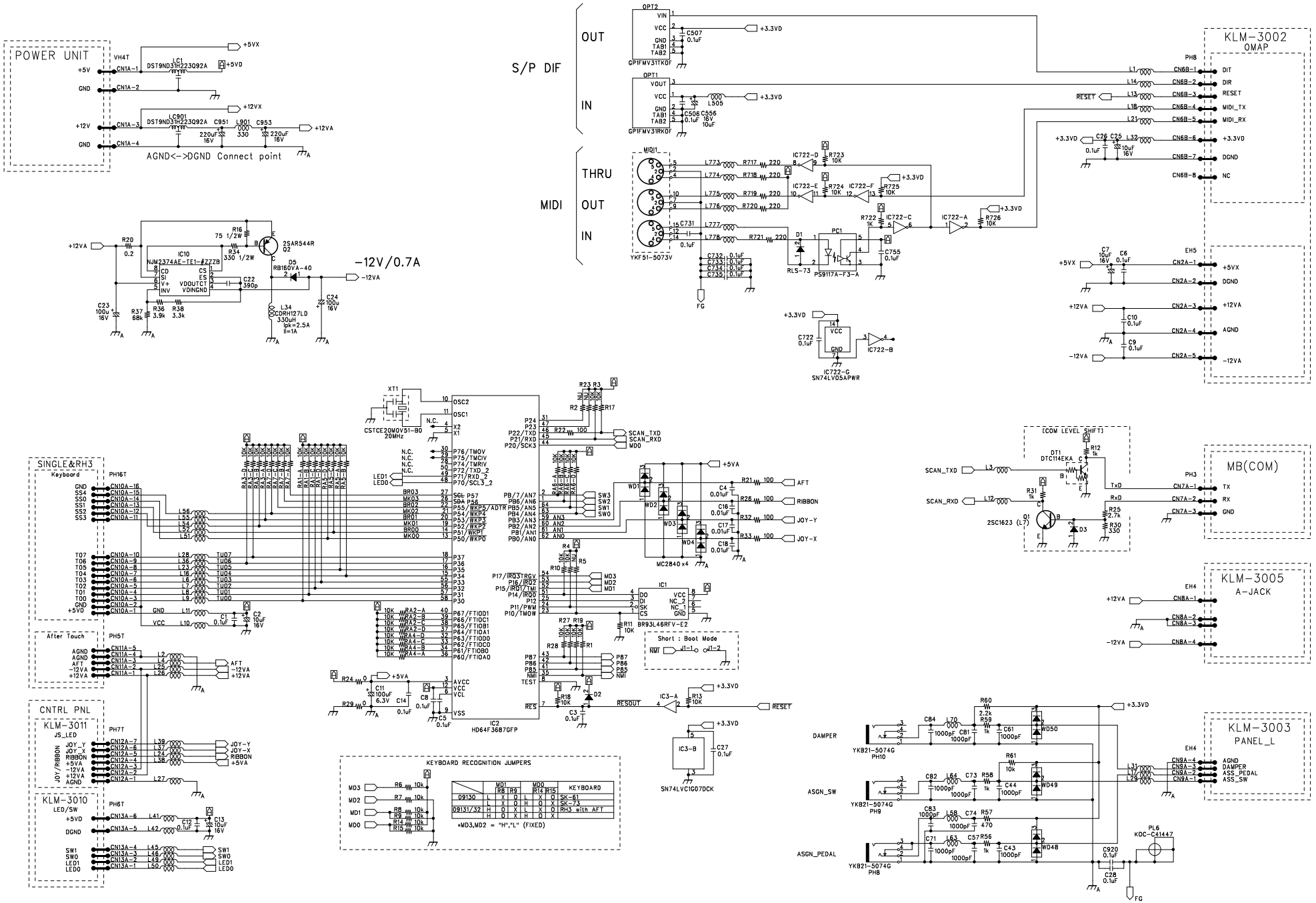

MARK	REVISION REASON	DATE	REVISED BY

DESIGNED BY	CHECKED BY	APPROVED BY	MODEL
S.Nomura		Masato Adachi	X-09130/31/32

TITLE: KLM-3006 Digital Jack Schematics

KORG | DRAWING NO. KOD-A30880 | C | DATE 2010.11.18

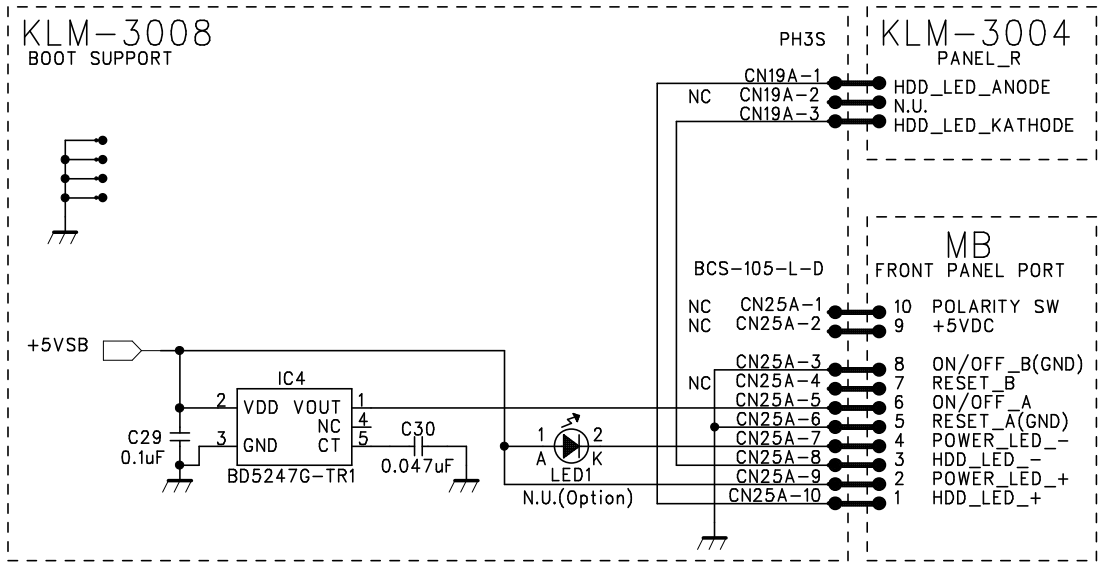

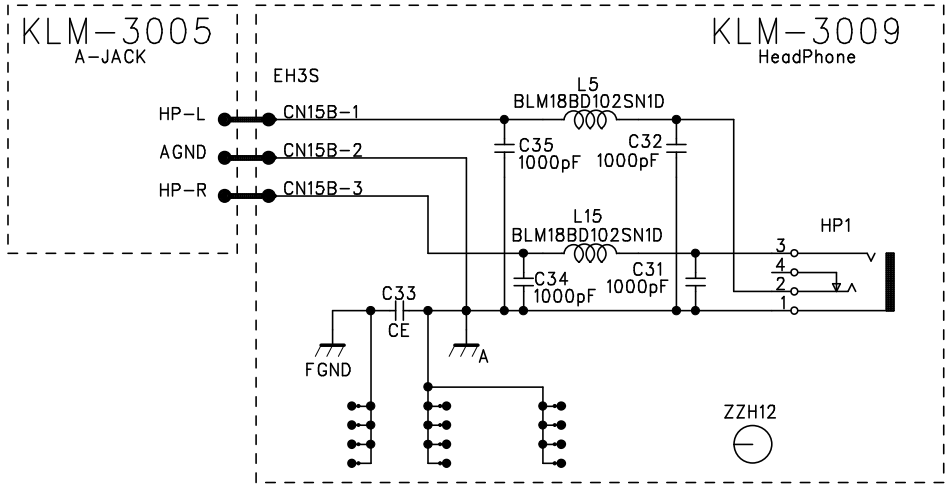

MARK	REVISION REASON	DATE	REVISED BY
△			
△			
△			
△			
△			

DESIGNED BY	CHECKED BY	APPROVED BY	MODEL X-09130/31/32
S.Nomura	DR/SON	Masato Adachi	TITLE KLM-3008 BOOT SUPPORT KLM-3009 HEAD PHONES Schematics
KORG	DRAWING NO. KOD-A40719	C	DATE 2010.11.11

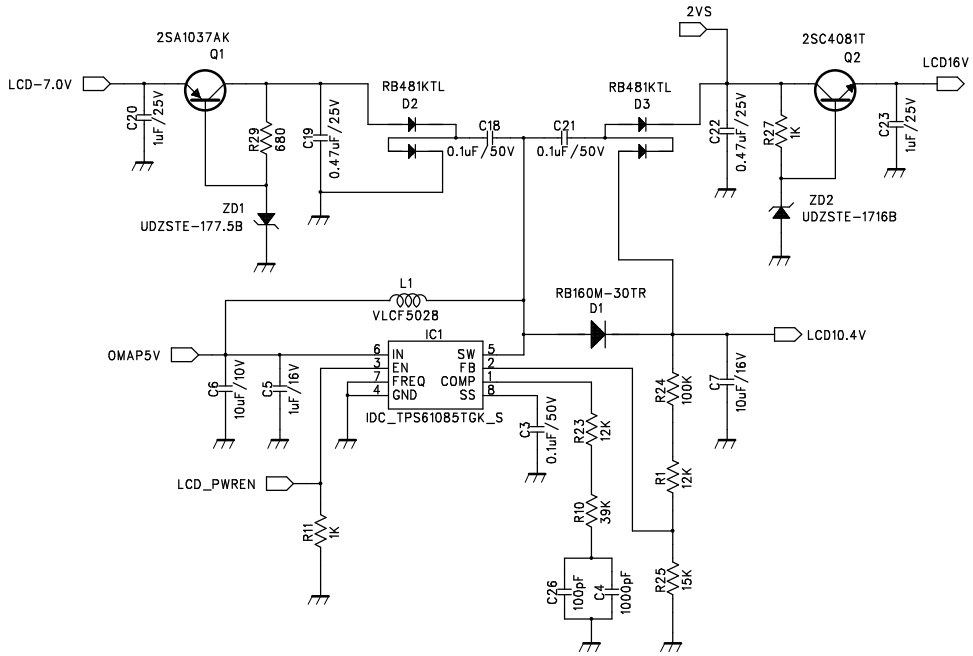

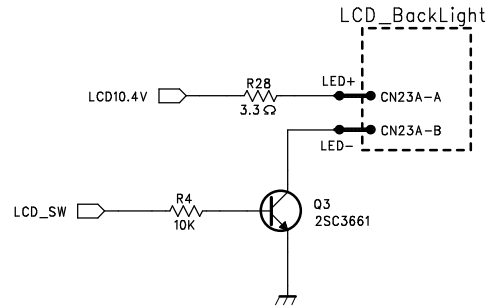

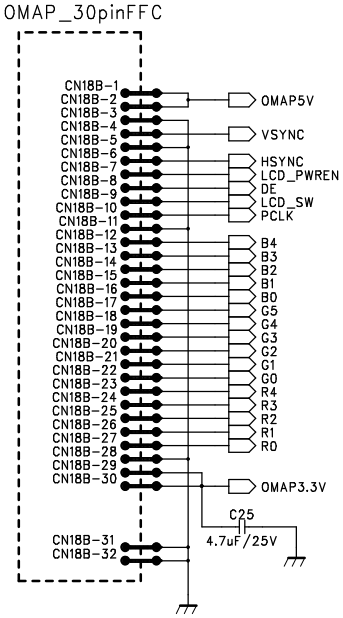

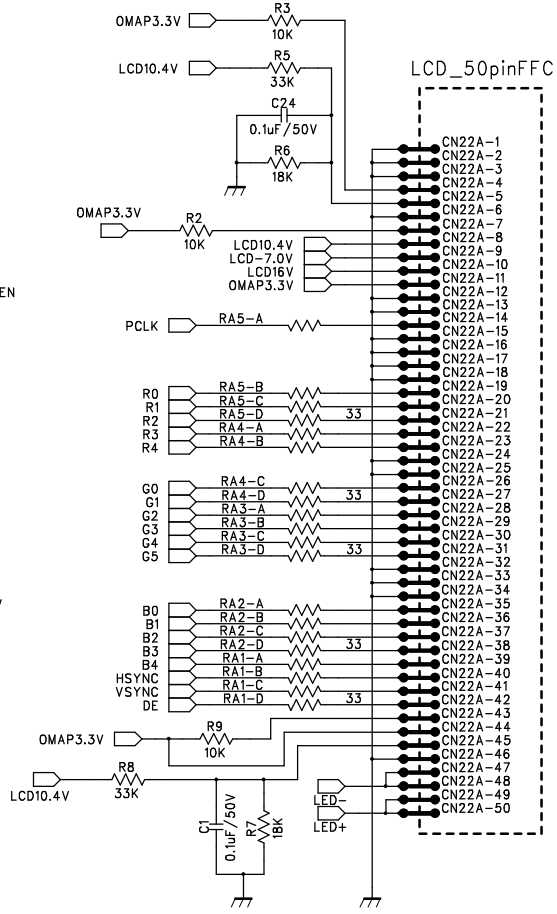

X1 X2 X3

X4 X5

ZZM1 ZZM2

MARK	REVISION REASON	DATE	REVISED BY
△			
△			
△			
△			
△			

DESIGNED BY	CHECKED BY	APPROVED BY	MODEL
Y.Tomiyama	DR	Masato Adachi	X-09130/1/2

TITLE
KLM-3007
LCD I/F Schematics

KORG

DRAWING NO.
KOD-A30881

DATE
'10.11.16

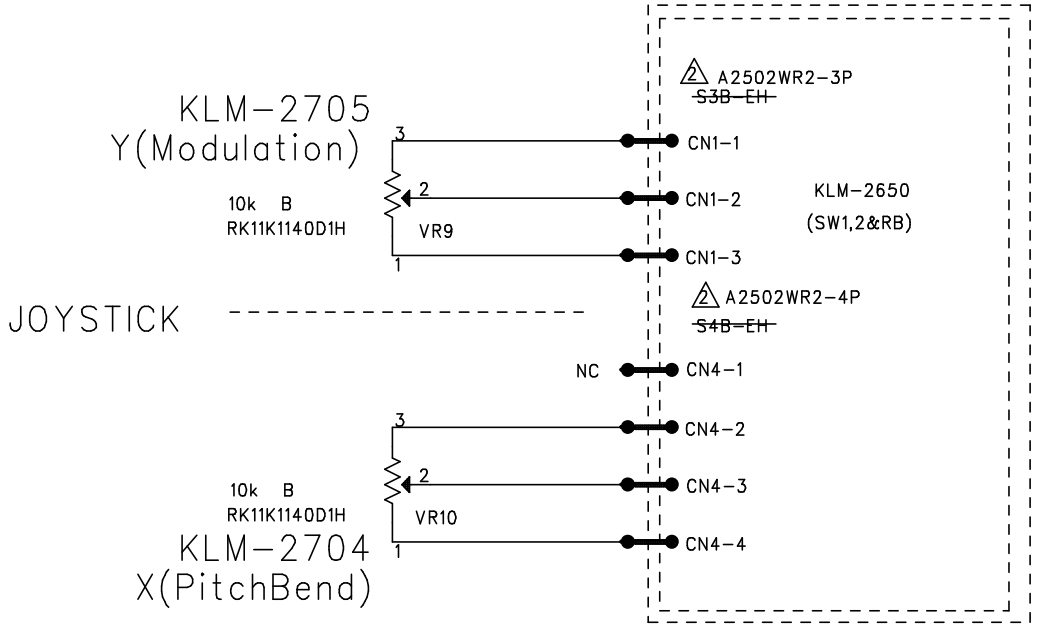

MARK	REVISION REASON	DATE	REVISED BY
△			
△4	機種追加のため	'11.01.13	Y.Tomiyama
△3	機種追加のため	'10.03.08.	S.Kamachi
△2	代替依頼のため (104から自然切替)	'09.12.25.	S.Kamachi
△1	機種追加のため	'08.07.16	S.Kamachi

△4 X-09130/1/2
△3 X-09100
△1 X-07111

DESIGNED BY	CHECKED BY	APPROVED BY	MODEL X-4100/10/20
S.Kamachi	S.Nomura	J.Takeda	TITLE KLM-2704/2705 (JoystickX/Y)
KORG	DRAWING NO. KOD-A40642		DATE '07.02.20

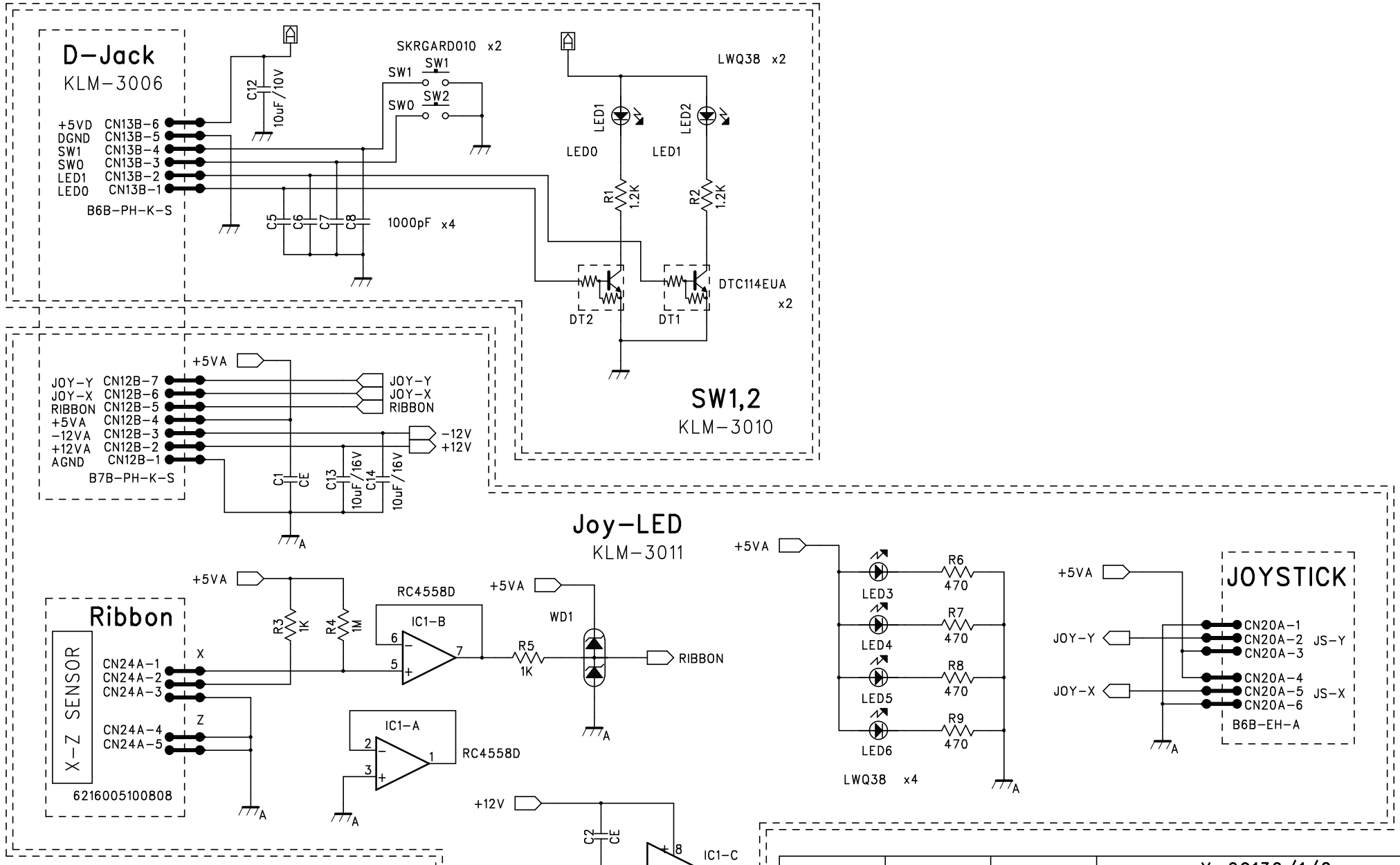

MARK	REVISION REASON	DATE	REVISED BY
△			
△			
△			
△			
△			

DESIGNED BY	CHECKED BY	APPROVED BY	MODEL X-09130/1/2
Y.Tomiyama	DRISON	Masato Adachi	TITLE KLM-3010/11 SW1,2/JoyLED Schematics

KORG

DRAWING NO. KOD-A40720

DATE '10.11.16

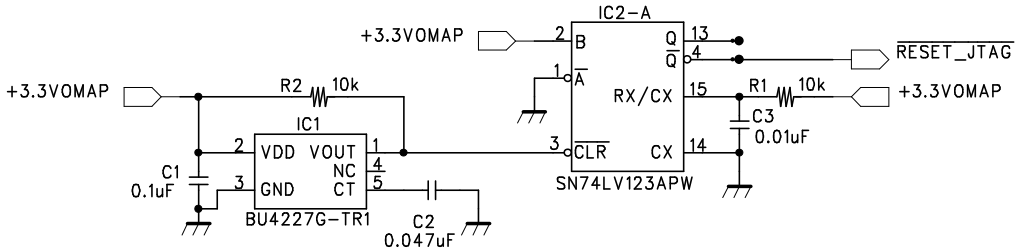

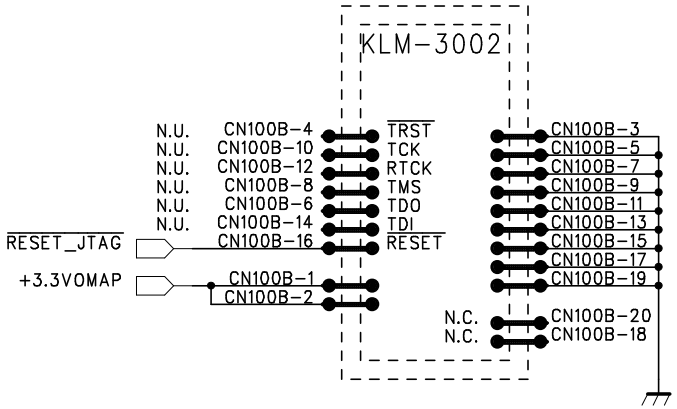

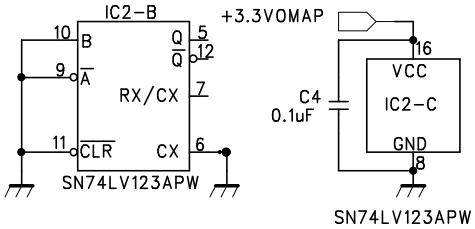

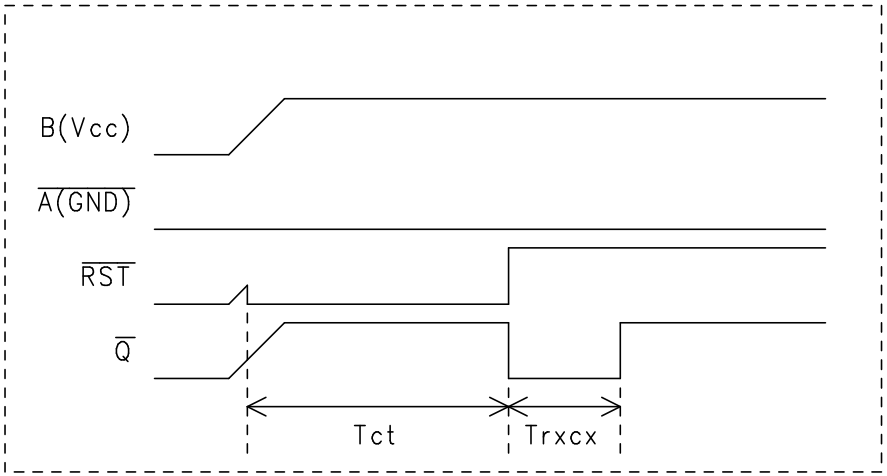

MARK	REVISION REASON	DATE	REVISED BY
△			
△			
△			
△			
△			

X1 X2 X3 X4

ZZM1 ZZM2

DESIGNED BY	CHECKED BY	APPROVED BY	MODEL X-09130
S.Nomura	DR/SOM	Masato Adachi	TITLE KLM-3101 Second reset schematics

KORG

DRAWING NO. KOD-A40721 A

DATE 2011.01.18

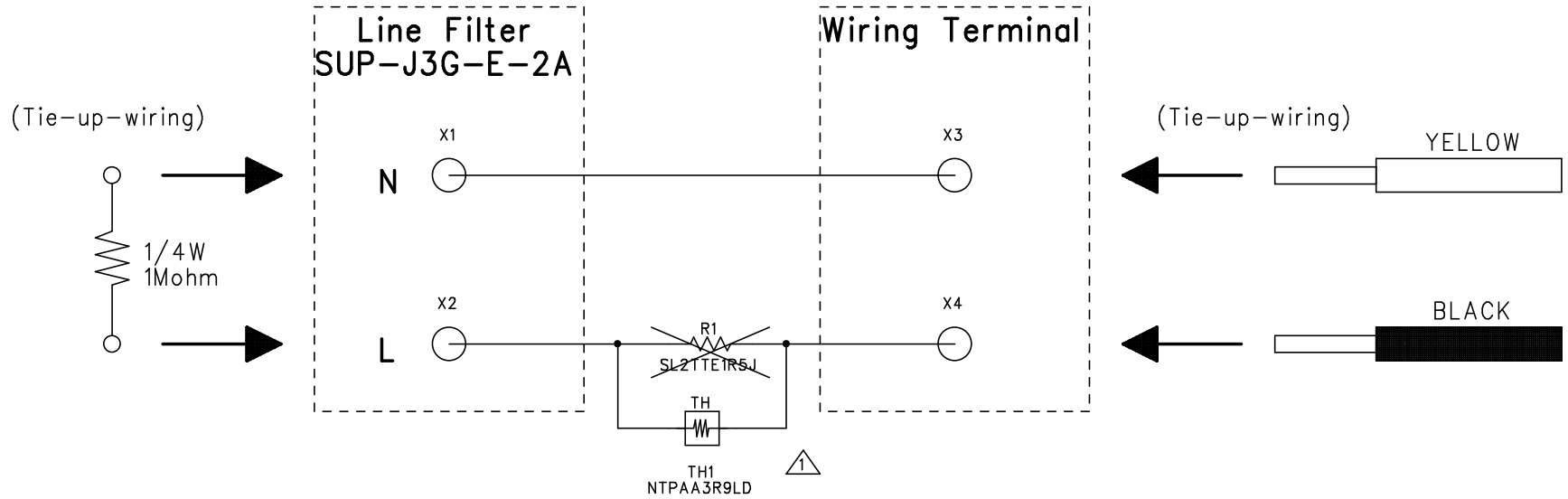

MARK	REVISION REASON	DATE	REVISED BY
1	To reduce Inrush Current	2011.3.18	S.Nomura
△			
△			
△			
△			

ZZH1 ANA4.0_NTH 1
ZZH2 ANA4.0_NTH 1
ZZH3 ANA4.0_NTH 1
ZZH4 ANA4.0_NTH 1

DESIGNED BY	CHECKED BY	APPROVED BY	MODEL X-09130/31/32
S.Nomura	DRISON	Masato Adachi	TITLE KLM-3102 Inlet Intercept PCB
KORG	DRAWING NO. KOD-A40722		DATE 2011.03.18

KRONOS Test mode

How to enter the TEST MODE

Following table shows each static test mode.

The instruments enters the each test mode when pushing the switch in the SWITCH column of the table below.

SWITCH	TEST MODE
[MIXER KNOBS]+ [RESET CONTROLS]+ [ENTER]+[5]	Full test
[MIXER KNOBS]+ [RESET CONTROLS]+ [ENTER]+[2]	Skipp internal Test

Basic operation

[ENTER]:Proceed to the next check .

△ : The item is advanced.

▽ : The item is returned.

[FF>>]: The step is advanced.

[<<REW]: The step is returned.

1. Appearance check

1) Check that there is no scratch on Case and Knobs.

2) Check that there are no abnormalities or problems on paintings and silk printings.

3) Check that there are no abnormalities or problems of float or ETC on Buttons, Switches, Jacks, Potentiometers and etc.

4) Check that there are about one sheet of paper space between the touch panel and the LCD food.

5) Check there are 0.8mm or more space between the keyboard and the FrontBar.

6) Check that there is neither shaking of the product nor a distortion on the plane.

2. Preperation and LCD flicker Check

(note)Do not insert USB memory before power on.

1) Push [POWER] switch turn on.

Insert USB memory after blinking DISK access LED.

Connect USB A and USB B with one cable.

Connect MIDI IN and OUT with one MIDI cable.

Check that LCD doesn't flicker when LCD display Set List page.

3. Sound check

Hit the key medium touch from left edge to right edge.

Check that abnormality is not heard in the sound.

Push [COMBI] switch.

Check the sound after select BANK I-A ,I-B and I-C

4 . LCD color check

Push the switch in order of [PROG],[BANK I-A], [0], and [ENTER].

Check that abnormality is not fond the coler of LCD while turning the Rotary Encoder.

Push the switch in order of [I-D],[0], and [ENTER].

Check that abnormality is not fond the coler of LCD while turning the Rotary Encoder.

5. Start TEST MODE

Please push the switch of [MIXER KNOBS], [RESET CONTROLS], [ENTER], and [5] at the same time.

LCD is displayed as shown in a right figure.

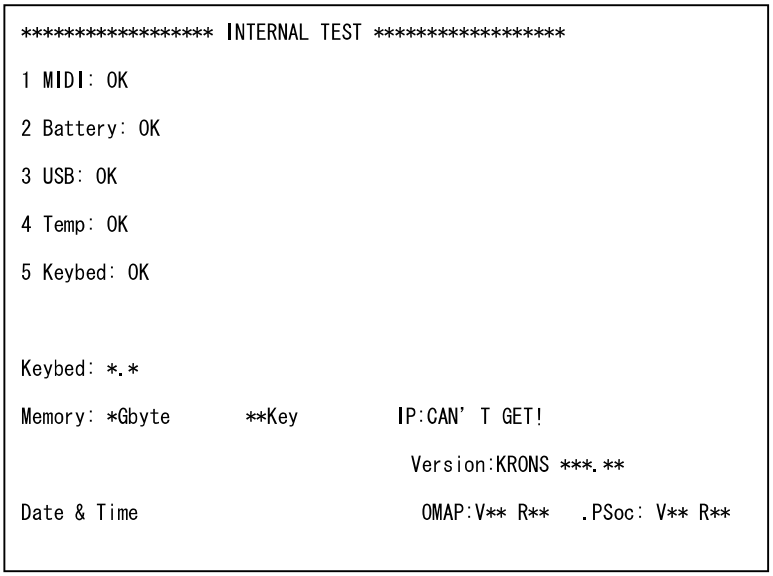

6. System Version Check

Check that the displayed version is latest.

"Version","OMAP","PSoC","Keybed"

7. Internal inspection check

Check the following inspection is OK

"MIDI","Battery", "USB", "Keybed"

8. Memory size

Confirm the size of memory which is displayed on the side of "Memory"

9. The number of KEY

Check the number of KEY on the display.

10. Date and Time

Confirm that display time and date is now.

Advance it to the following inspection pushing the [ENTER] switch.

11. Fan Control

LCD displays "Value" and "RPM"

Confirm that "RPM" value is change by VALUE slilder.

(note) If "RPM" value is not change, rotate encoder more than two clicks.

Advance it to the following inspection pushing the [ENTER] switch.

12 All LED check

Check all red LED turn on.

Check that the brightness of LED is uniform.

Wite LED

Top of Joystick	Bottom of Joystick	Left of Joystic	Right of Joystick	
	SW1	SW2	KARMA ON/OFF	LATCH
M	A	B	C	D
LINK ED	DRUM TRACK	TIMBRE/TRACK	TIMBRE/TRACK 1-8	TIMBRE/TRACK 9-16
AUDIO	AUDIO IN	AUDIO 1-8	AUDIO 9-16	EXIT
RT KNOBS/KARMA	TONE ADJ/EQ	TONE ADJ	EQ	MIX PLAY/MUTE(8point)
MIX SELECT(8point)	CHANNEL STRIP	INDIVIDUAL PAN	SOLO	SET LIST
COMBI	PROG	SEQ	HELP	SAMPLING
GLOBAL	DISK	COMPARE	BANK I-A	I-B
I-C	I-D	I-E	I-F	I-G
BANK U-A	U-B	U-C	U-D	U-E
U-F	U-G	PAUSE	<<REW	FF>>

RED LED

REC/WRITE	SEQUENCER START/STOP	SAMPLING REC	SAMPLING START/STO

Advance it to the following inspection pushing the [ENTER] switch.

13. Panel SW & LED check

The confirmation advances in order of the table below.

Push the switch corresponding to lighting LED.

(note) Refer to the table below for the correspondence of the switch and LED.

LED that should be inspected as follows lights when a correct switch is pushed.

LED	SW
SW1	SW1
SW2	SW2
KARMA ON/OFF	KARMA ON/OFF
LATCH	LATCH
M	MODULE CONTROL
A	MODULE CONTROL
B	MODULE CONTROL
C	MODULE CONTROL
D	MODULE CONTROL
DRUM TRACK	DRUM TRACK

LINKED	DRUM TRACK
TIMBRE/TRACK	TIMBRE/TRACK
TIMBRE/TRACK 1-8	TIMBRE/TRACK
TIMBRE/TRACK 9-16	TIMBRE/TRACK
AUDIO	AUDIO
AUDIO IN	AUDIO
AUDIO 1-8	AUDIO
AUDIO 9-16	AUDIO
EXT	EXT
RT KNOBS/KARMA	RT KNOBS/KARMA
TONE ADJ/EQ	TONE ADJ/EQ
TONE ADJ	TONE ADJ/EQ
EQ	TONE ADJ/EQ
MIX PLAY/MUTE 1	MIX PLAY/MUTE 1
MIX PLAY/MUTE 2	MIX PLAY/MUTE 2
MIX PLAY/MUTE 3	MIX PLAY/MUTE 3
MIX PLAY/MUTE 4	MIX PLAY/MUTE 4
MIX PLAY/MUTE 5	MIX PLAY/MUTE 5
MIX PLAY/MUTE 6	MIX PLAY/MUTE 6
MIX PLAY/MUTE 7	MIX PLAY/MUTE 7
MIX PLAY/MUTE 8	MIX PLAY/MUTE 8
MIX SELECT 1	MIX SELECT 1
MIX SELECT 2	MIX SELECT 2
MIX SELECT 3	MIX SELECT 3
MIX SELECT 4	MIX SELECT 4
MIX SELECT 5	MIX SELECT 5
MIX SELECT 6	MIX SELECT 6
MIX SELECT 7	MIX SELECT 7
MIX SELECT 8	MIX SELECT 8
CHANNEL STRIP	MIX KNOBS
INDIVIDUAL PAN	MIX KNOBS
ALL	RESET CONTROLS
SOLO	SOLO
ALL	△
ALL	▽
SET LIST	SET LIST
ALL	EXIT
COMBI	COMBI
PROG	PROG

SEQ	SEQ
HELP	HELP
SAMPLING	SAMPLING
GLOBAL	GLOBAL
DISK	DISK
COMPARE	COMPARE
ALL	7
ALL	8
ALL	9
ALL	4
ALL	5
ALL	6
ALL	1
ALL	2
ALL	3
ALL	-
ALL	0
ALL	.
ALL	ENTER
BANK I-A	BANK I-A
I-B	I-B
I-C	I-C
I-D	I-D
I-E	I-E
I-F	I-F
I-G	I-G
BANK U-A	BANK U-A
U-B	U-B
U-C	U-C
U-D	U-D
U-E	U-E
U-F	U-F
U-G	U-G
PAUSE	PAUSE
<<REW	<<REW
FF>>	FF>>
ALL	LOCATE
REC/WRITE(RED)	REC/WRITE
SEQUENCER　START/STOP	SEQUENCER　START/STOP

SEQUENCER　START/STOP(RED)	SEQUENCER　START/STOP
TEMPO	TAP TEMPO
SAMPLING REC(RED)	SAMPLING REC
SAMPLING　START/STOP	SAMPLING　START/STOP
SAMPLING　START/STOP(RED)	SAMPLING　START/STOP

After pushing SAMPLING　START/STOP, advance it to the following inspection

14. LCD check

14-1 All segments are white

Check all dots are white.

Check that there are no abnormalities in the color.

Check no dust in LCD.

Push [ENTER] and advance it to the following inspection.

14-2 All segments are black

Check all dots are black.

Check no dust in LCD.

Push [ENTER] and advance it to the following inspection.

14-3 Gradation check

The gradation that darkens while going to bottom on the screen is displayed.

Check that there are no abnormalities in the color.

Push [ENTER] and advance it to the following inspection.

14-4 Brightness check

Confirm the brightness changes periodically.

Push [ENTER] and advance it to the following inspection.

14-5 Touch pannel calibration

Touch center of “+” by using stylus pen.

The square around "+" becomes green from red.

After the calibration, push [ENTER] and advance it to the following inspection.

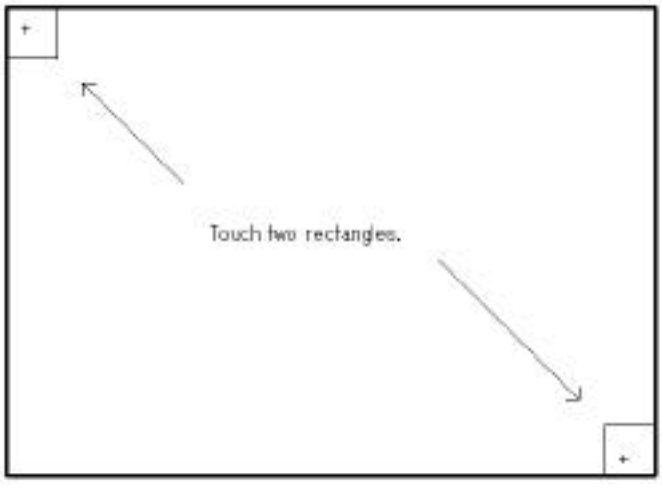

14-6 Touch function check

A blue square is displayed in the center and lower right on the left of LCD.

Confirm the change into green pushing

each square by the finger.

Push [ENTER] and advance it to the following inspection if the confirmation of three places ends.

14-7 Buzzer check

Confirme that the buzzer sound is not extremely small.

Push [ENTER] and advance it to the following inspection

15. A/D converter

(note) When objects other than the inspection object are operated, it displays an error.
Please inspect it again if this error occurs due to the mistake of the operation.

15-1 Ribbon controller check

Push the right edge of ribbon controller.

Confirm “OK” is displayed right side of “MAX” in the LCD.

The finger is moved to the left while pushing the ribbon controller.

Confirm “OK” is displayed right side of “CENTER” while it pushing about center of Ribbon controller.

Keep moving the finger to the left edge.

Confirm “OK” is displayed right side of “MAX” while it pushing left edge of Ribbon controller.

(note) Confirm RAW -value doesn't become 1023 at any position.

Confirm it doesn't have the foreign-body sensation while operating it.

Release finger from Ribbon controller.

Push [ENTER] and advance it to the following inspection

15-2 JOYSTICK It advances to the following inspection **-X axis**

Confirm “OK” is displayed right side of “RIGHT” when JOYSTIC is moved to the right

Moved JOYSTIC to the left.

Confirm “OK” is displayed right side of “CENTER” while it is moved about center.

Keep moving it to the left.

Confirm “OK” is displayed right side of “LEFT” when it is moved to the left full.

Confirm that movement is smooth moves smoothly while moving JOYSTIC up and down and right and left.

Move JOYSTIC to the right full.

Releases it so that JOYSTICK returns it to the center by the power of the spring.

Don't toush JOYSTIC and push [ENTER] and advance it to the following inspection

15-3 JOYSTICH Y axis

Confirm "OK" is displayed right side of "MAX" when JOYSTIC is moved up.

Move JOYSTIC downward.

Confirm "OK" is displayed right side of "CENTER" while it move about center.

Keep moving it downward.

Confirm "OK" is displayed right side of "MIN" when it is moved to the downward full.

Move JOYSTIC downward full.

Releases it so that JOYSTICK returns it to the center by the power of the spring.

Don't toush JOYSTIC and push [ENTER] and advance it to the following inspection

15-4 VECTOR JOYSTIC

Confirm "OK" is displayed side of "CENTER" when VECTOR JOYSTIC is moved to the CENTER.

Confirm "OK" is displayed right side of "RIHGT" when it is moved to the right full.

Confirm "OK" is displayed right side of "LEFT" when it is moved to the left full.

Confirm "OK" is displayed right side of "MAX" when it is moved to the up full.

Confirm "OK" is displayed right side of "MIN" when it is moved to the down full.

Confirm that movement is smooth moves smoothly while moving it up and down and right and left.

Don't toush VECTOR JOYSTIC and push [ENTER] and advance it to the following inspection.

15-5 Rotary Volume and Slide Volume Check

The result of rotary volume displayed under "Knob1" to "Knob8" in the LCD.

The result of slide volume displayed under "Fader1" - "Fader8","Master", and "Value".

Check following about Each Rotary Volume

1) Rotate smoothly
2) "OK" is displayed right side of "CENTER" when the knob is rotated 12 o'clock.
3) "OK" is displayed right side of "MAX" when the knob is rotated clockwise full.
4) "OK" is displayed right side of "MIN" when the knob is rotated counterclockwise full.

Check following about Each Slide Volume

1) Slide smoothly.
2) "OK" is displayed right side of "CENTER" when the Slider is rotated 12 o'clock.
5) "OK" is displayed right side of "MAX" when the Slider is moved to right full.
6) "OK" is displayed right side of "MIN" when the Slider is moved to left full.

Push [ENTER] and advance it to the following inspection after the confirmation ends.

15-6 Rotary Encoder Check

Confirm rotate smoothly.

Set the encoder to the position that you easily get one rotation.

Push switch [7] for reset.

Rotate one-rotation encoder clockwise.

Confirm an increase of the value and becoming 32.

Confirm that “OK” is displayed under “32”

Push switch [7] for reset.

Rotate one-rotation encoder counterclockwise.

Confirm an decrease of the value and becoming -32.

Confirm that two “OK” is displayed under “-32”

Push [ENTER] and advance it to the following inspection after the confirmation ends.

15-7 TEMPO Volume Check

Rotate smoothly

“OK” is displayed right side of “CENTER” when the knob is rotated 12 o’clock.

“OK” is displayed right side of “MAX” when the knob is rotated clockwise full.

“OK” is displayed right side of “MIN” when the knob is rotated counterclockwise full.

It advances to the following inspection at the same time.

15-8 Pedal

Push on the opponent of EXP-2.

Push on the near side of EXP-2 slowly.

Confirm three OK is displayed in the next order.

1) “OK” is displayed under “MIN” of “FootPedal”
2) “OK” is displayed under “CENTER” of “FootPedal”
3) “OK” is displayed under “MAX” of “FootPedal”

Push on the opponent of EXP-2.

Push DS-1H slowly.

Confirm three OK is displayed in the next order.

1) “MAX” of “DamperPedal”
2) “CENTER” of “DamperPedal”
3) “MIN” of “DamperPedal”

Release DS-1H

Push PS-2

Confirm that “OK” is didplayed under “MIN” of “FootSwitch!”

Release PS-2

Confirm that “OK” is displayed under “MAX” of “FootSwitch” momentarily.

It advances to the following inspection at the same time.

18. Keyboard check

18-1. Velocity check

Hit the key medium touch from right edge of key to leftedge of key.

When hard touch or soft touch is detected, the error is displayed.

Confirm a mechanical, abnormal noise is not generated while inspecting it.

It advances to the following inspection after left edge key check ends.

(note) How to hit or play keyboard .

Push right edge key and keep pushing it.

Keep pushing right edge key and push 2nd key from the right edge.

Keep pushing 2nd key from the right and release right edge key.

Keep pushing 2nd key from the right and push 3rd key from the right.

In the same way, push the 4th key from the right .

In the same way, check until left edge key sequentially

18-2 After touch check

Push C4Key and C#4Key

Confirm “OK” is displayed side of “MAX” when C4Key and C#4Key is pushed.

Check following after value when right and left edge key is pushed.

61Key model: Value must be 0

73/88Key: Value must be equal or lower than 285.

Push the ENTER switch if the inspection ends.

Turn off the Power.

Disconnect cables

Error Code

check item	NG Step Number	Symptom
1 MIDI	S1	Time out Error
	S2	Verify Error
2 Battery	S1	Time setting Error (It is 2009 former.)
3 USB	S1	USB A and B loop is not detected.
	S2	USB memory id note tetected.
4 Temp	S1	CPU temperature is not acquired.
	S2	SYSTEM temperature is not acquired.
	S3	CPU temperature is over 70 degree
	S4	SYSTEM temperature is over 70 degree.
5 KeyBed	S1	Communication Check Error
	S2	Pinmode Error (The numbers of keyboards are not which 61, 73 or 88.)
	S3	Keybed EEPROM Error
	S4	Keybed matrix circuit Error
	S5	Controler use AD Error

KORG KRONOS Parts List

⚠= SAFETY CRITICAL COMPONENT.

Part Number	Category	Part Name	Location	Reference	QTY		
					61	73	88
500324022002	ASSP IC	TPS3823-30DBVR	KLM-3002	IC7	1	1	1
500324007049	LDO IC	BD18KA5FP-E2	KLM-3002	IC10	1	1	1
500324009054	REGULATOR IC	NJM78M05DL1A-TE1	KLM-3002	IC17	1	1	1
500324021149	OPAMP	NE5532ADR	KLM-3002	IC11-13	3	3	3
500324022116	REGULATOR IC	TPS73733DCQR	KLM-3002	IC21	1	1	1
500324022126	DC-DC Converter	TPS62420DRCR	KLM-3002	IC22	1	1	1
500335400450	CRYSTAL	CX3225SB24000D0PESZ1	KLM-3002	XT3	1	1	1
500335400460	CRYSTAL	CX3225SB24576D0PESZ1	KLM-3002	XT2	1	1	1
500335400600	CRYSTAL	CX3225SB30000D0PESZ1	KLM-3002	XT1	1	1	1
500402401300	EMI/EMC PART	VLF3014AT-2R2M1R2	KLM-3002	L6-7	2	2	2
500474039400	CONNECTOR	YKF45-0021N(USB RA B-TYPE)	KLM-3002	USB4	1	1	1
500474045544	CONNECTOR	YKF45-0033N(USB RA A-TYPE)	KLM-3002	USB1-2	2	2	2
200109263002	PCB ASSY	KLM-3002 KRONOS-61/73/88	KLM-3002		1	1	1
500314010690	LED	19-213/R6C-AN2Q1B/3T(ELJ)	KLM-3003/3004	LED64 LED52 LED70 LED53	4	4	4
500314036000	LED	LWQ38E-Q1S2-3K6L-1	KLM-3003/3004	LED1-51 LED54-63 LED65-68 LED71-74 LED102	70	70	70
500324022116	REGULATOR IC	TPS73733DCQR	KLM-3003/3004	IC2 IC16	2	2	2
500362009032	VR	RK11K1140A23	KLM-3003/3004	VR1 VR3 VR5 VR7 VR9 VR11 VR13 VR15 VR20	9	9	9
500362009072	VR	RK14K12D0D11	KLM-3003/3004	VR21	1	1	1
500362009073	VR	RKJXK1210	KLM-3003/3004	VR19	1	1	1
500365011400	VR	RS30111A602N	KLM-3003/3004	VR2 VR4 VR6 VR8 VR10 VR12 VR14 VR16-18	10	10	10
500370006300	ENCODER SWITCHS	SRGPWJ0200	KLM-3003/3004	ENC2	1	1	1
500374001600	SW	SKRGARD010	KLM-3003/3004	SW1-76	76	76	76
200109263003	PCB ASSY	KLM-3003/4 KRONOS-61/73/88	KLM-3003/3004		1	1	1
500184080020	Chip FUSE R	RF732BTTD0R2J	KLM-3005/6/8/9	R20	1	1	1
500304050740	TRANSISTOR	2SAR544RTL	KLM-3005/6/8/9	Q2	1	1	1
500314010740	DIODE	RB160VA-40	KLM-3005/6/8/9	D5	1	1	1
500320009108	OPAMP	NJM4556AL (SIP)	KLM-3005/6/8/9	IC601-602	2	2	2
500324007050	RESET IC	BD5247G-TR	KLM-3005/6/8/9	IC4	1	1	1
500324009086	DC-DC Converter	NJM2374AE-TE1-#ZZZB	KLM-3005/6/8/9	IC10	1	1	1
500324021149	OPAMP	NE5532ADR	KLM-3005/6/8/9	IC102-105 IC204-205 IC304-305 IC404-405	10	10	10
500330003700	PHOTO COUPLER	PS9117A-F3-AX(M)	KLM-3005/6/8/9	PC1	1	1	1
500330004000	OPTO TX/RX MODULE	GP1FMV31TK0F	KLM-3005/6/8/9	OPT2	1	1	1
500330004100	OPTO TX/RX MODULE	GP1FMV31RK0F	KLM-3005/6/8/9	OPT1	1	1	1
500335400151	CERAMIC RESONATOR	CSTCE20M0V51-R0	KLM-3005/6/8/9	XT1	1	1	1
500362009058	VR	RK09K1110 50Kﾄﾘ (F1815071M)	KLM-3005/6/8/9	VR101-102	2	2	2
500375014900	SW	SPUN192600	KLM-3005/6/8/9	SW101-102	2	2	2
500402400600	INDUCTOR	PK0810-331K-UL-T/F (TR)	KLM-3005/6/8/9	L603-604 L901	3	3	3
500404001250	Chip INDUCTOR	CDRH127LD	KLM-3005/6/8/9	L34	1	1	1
500450003100	PHONE JACK	LGR4609-7100F	KLM-3005/6/8/9	HP1	1	1	1
500454005600	PHONE JACK	YKB21-5006G	KLM-3005/6/8/9	PH101-102 PH201-202	4	4	4
500454009900	PHONE JACK	YKB21-5074G	KLM-3005/6/8/9	PH8-10 PH301-302 PH401-402	7	7	7
500480010560	DIN JACK	YKF51-5073V	KLM-3005/6/8/9	MIDI1	1	1	1
200109263005	PCB ASSY	KLM-3005/6/8/9 KRONOS-61/73/88	KLM-3005/6/8/9		1	1	1
500304050310	TRANSISTOR	2SA1037AKT146R	KLM-3007(LCD I/F)	Q1	1	1	1
500304050660	TRANSISTOR	2SC4081T106R	KLM-3007(LCD I/F)	Q2	1	1	1
500314037000	SCHOTTKY DIODE	RB160M-30TR	KLM-3007(LCD I/F)	D1	1	1	1
500314037100	SCHOTTKY DIODE	RB481KTL	KLM-3007(LCD I/F)	D2-3	2	2	2
500314037200	ZENER DIODE	UDZSTE-1716B	KLM-3007(LCD I/F)	ZD2	1	1	1
500314037300	ZENER DIODE	UDZSTE-177.5B	KLM-3007(LCD I/F)	ZD1	1	1	1
500324022133	DC-DC Converter	TPS61085DGKR	KLM-3007(LCD I/F)	IC1	1	1	1
500402401500	INDUCTOR	VLCF5028	KLM-3007(LCD I/F)	L1	1	1	1
200109263007	PCB ASSY	KLM-3007 KRONOS-61/73/88	KLM-3007(LCD I/F)		1	1	1
500314036000	LED	LWQ38E-Q1S2-3K6L-1	KLM-3010/11		6	6	6
500324021034	OPAMP	RC4558DR	KLM-3010/11		1	1	1
500374001600	SW	SKRGARD010	KLM-3010/11		2	2	2
200109263010	PCB ASSY	KLM-3010/11 KRONOS-61/73/88	KLM-3010/11		1	1	1
500324007028	ASSP IC	BU4227G-TR	KLM-3101	IC1	1	1	1
200109263101	PCB ASSY	KLM-3101	KLM-3101		0.1	0.1	0.1
500002190400 ⚠	POWER SUPPLY BOARD	ENO-1612-K	Other Electric		1	1	1
500002189800	MOTHER BOARD	BLKD510M0	Other Electric		1	1	1
500002190700	MEMORY MODULE	DIMM SMD-2G88HP-8E	Other Electric		1	1	1
500520001700 ⚠	LITHIUM BATTERY	CR2032-A1//Z	Other Electric		1	1	1
500313007400	LCD	UMSH-8240MD-T	Other Electric		1	1	1
500415005600	TOUCH PANEL	NC01151-T001	Other Electric		1	1	1
500375011100 ⚠	SW	POWER SW JW-M11RKK	Other Electric		1	1	1
500646040900		POWER SWBARRIER AT-217K	Other Electric		1	1	1
500415005000	PRESSURE SENSOR	KX-2100 SENSOR (BLACK)	Other Electric		1	1	1
500420007400	KEYBOARD UNIT	SK61	Other Electric		1		
500420007800	KEYBOARD UNIT	RH-3B 73KEY AFT	Other Electric			1	
500420007600	KEYBOARD UNIT	RH-3B AFT	Other Electric				1
500435006100	SSD	THNSNB030GBSJ	Other Electric		1	1	1
500437000700 ⚠	DC FAN	XRL4106028	Other Electric		1	1	1
500540028938 ⚠	AC INLET	SUP-J3G-E2A	Other Electric		1	1	1
500104016710 ⚠	RESISTOR	CFS1/4CT26A 105 J	Other Electric		1	1	1
500180400020 ⚠	THERMISTOR	NTPAA3R9LD6A0	Other Electric		1	1	1

500565001400	HEATSINK	HS-AA-C-D(SOFT 50X50)	Other Electric	X-09130	1		
500565001500	HEATSINK	HH-AA-A-P(HARD 20X20)	Other Electric		1	1	1
500565001600	HEATSINK	HT-B-A-A(TAPE 20X20)	Other Electric		1	1	1
500540028903 ⚠	POWER PLUG/JACK	CONVERTER SOCKET YL-212-C	ACC	100JP	1	1	1
500600006508 ⚠	AC CABLE	LY100JPVCTFLY35LY37(JP)	ACC	100JP	1	1	1
500600005700 ⚠	AC CABLE	UC-953-J01	ACC	120CN/US			
500600005800 ⚠	AC CABLE	SC-111-J01	ACC	240AU			
500600005400 ⚠	AC CABLE	EC-652-E03	ACC	230GE			
500600006507 ⚠	AC CABLE	LY230BSH05VVFBSLY13(UK)	ACC	230UK			
500475104063	HARNESS	HNS-4063	Harness(61Key)		1		
500475004064	HARNESS	HNS-4064			1		
500475104066	HARNESS	HNS-4066			1		
500475104067	HARNESS	HNS-4067			1		
500475104068	HARNESS	HNS-4068			1		
500475104069	HARNESS	HNS-4069			1		
500475104070	HARNESS	HNS-4070			1		
500475104072	HARNESS	HNS-4072			1		
500475104073	HARNESS	HNS-4073			1		
500475104074	HARNESS	HNS-4074			1		
500475104075	HARNESS	HNS-4075			1		
500475104078	HARNESS	HNS-4078			1		
500475104079	HARNESS	HNS-4079			1		
500475104080	HARNESS	HNS-4080			1		
500475104081	HARNESS	HNS-4081			1		
500475104082	HARNESS	HNS-4082			1		
500475104093	HARNESS	HNS-4093			1		
500475104096	HARNESS	HNS-4096			1		
500475104119	HARNESS	HNS-4119			1		
500475104120	HARNESS	HNS-4120			1		
500475104121	HARNESS	HNS-4121			1		
500475004124	HARNESS	HNS-4124			1		
500475104063	HARNESS	HNS-4063	Harness(73Key)			1	
500475004064	HARNESS	HNS-4064				1	
500475104066	HARNESS	HNS-4066				1	
500475104067	HARNESS	HNS-4067				1	
500475104068	HARNESS	HNS-4068				1	
500475104069	HARNESS	HNS-4069				1	
500475104070	HARNESS	HNS-4070				1	
500475104071	HARNESS	HNS-4071				1	
500475104072	HARNESS	HNS-4072				1	
500475104073	HARNESS	HNS-4073				1	
500475104074	HARNESS	HNS-4074				1	
500475104075	HARNESS	HNS-4075				1	
500475104076	HARNESS	HNS-4076				1	
500475104077	HARNESS	HNS-4077				1	
500475104083	HARNESS	HNS-4083				1	
500475104084	HARNESS	HNS-4084				1	
500475104085	HARNESS	HNS-4085				1	
500475104086	HARNESS	HNS-4086				1	
500475104087	HARNESS	HNS-4087				1	
500475104093	HARNESS	HNS-4093				1	
500475104096	HARNESS	HNS-4096				1	
500475104063	HARNESS	HNS-4063	Harness(88Key)				1
500475004064	HARNESS	HNS-4064					1
500475104066	HARNESS	HNS-4066					1
500475104067	HARNESS	HNS-4067					1
500475104068	HARNESS	HNS-4068					1
500475104069	HARNESS	HNS-4069					1
500475104070	HARNESS	HNS-4070					1
500475104071	HARNESS	HNS-4071					1
500475104072	HARNESS	HNS-4072					1
500475104073	HARNESS	HNS-4073					1
500475104074	HARNESS	HNS-4074					1
500475104075	HARNESS	HNS-4075					1
500475104076	HARNESS	HNS-4076					1
500475104077	HARNESS	HNS-4077					1
500475104088	HARNESS	HNS-4088					1
500475104089	HARNESS	HNS-4089					1
500475104090	HARNESS	HNS-4090					1
500475104091	HARNESS	HNS-4091					1
500475104092	HARNESS	HNS-4092					1
500475104093	HARNESS	HNS-4093					1
500475104096	HARNESS	HNS-4096					1
500642000030		X09130 VJS KNOB C41705	Mechanical		1	1	1
500646100789 ⚠		X09130 SIDE PANEL-L E30572-1	Mechanical		1		
500646100790 ⚠		X09130 SIDE PANEL-R E30572-2	Mechanical		1		
500646100771 ⚠		X09131 SIDE PANEL-L E30573-1	Mechanical			1	1
500646100772 ⚠		X09131 SIDE PANEL-R E30573-2	Mechanical			1	1
500646100773		X09130 LCD HOOD E30575	Mechanical		1	1	1
500540028944		X09131 LCD SPACER F41729	Mechanical			1	1
500646100774		X09130 JS PANEL E30576	Mechanical		1	1	1
500646100776		X09130 KB COVER E30579	Mechanical		1		
500646100775		X09131 KEY BLOCK E30577	Mechanical			1	1
500646100777		X09130 VJS FRAME E40801	Mechanical		1	1	1
500646100782		X09130 REFLECTOR-5 E40804-5	Mechanical		1	1	1
500620049729		X09130 KEY-S-4 E40802-4	Mechanical		2	2	2
500620049733		X09130 KEY-L-4 E40803-4	Mechanical		6	6	6
500620049735		X09130 ENCODER KNOB E40800	Mechanical		1	1	1
500620049736		X09130 SVR KNOB-B/G E40805-2	Mechanical		10	10	10
500541000001		X09130 VJS SHEET-L F41627	Mechanical		1	1	1
500541000002		X09130 VJS SHEET-S F41628	Mechanical		1	1	1
500550023530		X09131 KB FELT F41629-1	Mechanical			1	
500550023531		X09132 KB FELT F41629-2	Mechanical				1
500646100764		X5870 VR KNOB(H) E30459-1	Mechanical		10	10	10
500620044800		ROTARY VR KNOB KOC-E48026-1	Mechanical		2	2	2
500620018200		POWER SWKNOB KOC-E40224	Mechanical		2	2	2
500500022500		FF-004-AR791	Mechanical		5		

500500037007		RUBBER FOOT K-24W	Mechanical			5	5
500646100791		X09130 JS REFLECTOR E40747-2	Mechanical		1	1	1

JoyStic unit

Part Number	Category	Part Name	Location	Reference	QTY		
500362009052	VR	RK11K1140D1H	KLM-2704/5	VR9-10	2	2	2
200062462704	PCB ASSY	KLM-2704/2705	KLM-2704/5		0.25	0.25	0.25
500646100703		X4100 JS COVER E40702-2	Mechanical		1	1	1
500646100068		X4100 JS WHEEL E40703	Mechanical		1	1	1
500646100070		X4100 JS WHEEL SUPPORT E30455	Mechanical		1	1	1
500646100071		X4100 JS FRAME E30456	Mechanical		1	1	1
500646100069		X4100 JS PLATE E40704	Mechanical		1	1	1
500644010500		X-0100 WHEEL SPRING KOC-C41222	Mechanical		2	2	2
500540026500		X-0100 JS WASHER KOC-F40979	Mechanical		2	2	2
500773060900		VN 3BBC 9			2	2	2
500791040308		BT B NIC 3X8			3	3	3

APPENDIX

1． PSoC System loading

Do the loading of Psoc system when you exchange PANEL PC BOARD(KLM-3003 or KLM-3004)
(When IC SY8C21323-24PVXIT is exchanged, the loading is similarly done.)
When the first turning on power after it exchanges it, it is automatically loaded.
(note) Lording can be started if set power on with pushing [ENTER] and [<<REW]
Display start up and “Updating the panel scan system...” is displayed in the upper left side of LCD.
“Completed!” is displayed if loading succeeds.
If loading is failed, “Cannot update it.”
Set power off after confirm this message.

TITLE

SidePanel **Assy**

MODEL

KRONOS 61/73/88

1

○BT B 3BC 3×8 16本
tightening torque 8Kgf･Cm

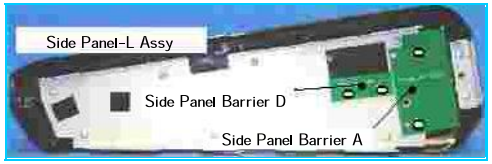

2

Screw Side Panel-L/R Assy after drawing to Side Panel to a rear side.

○BT B 3BC 3×8 4
tightening torque 8Kgf･Cm

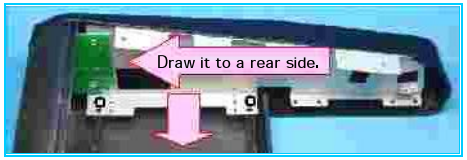

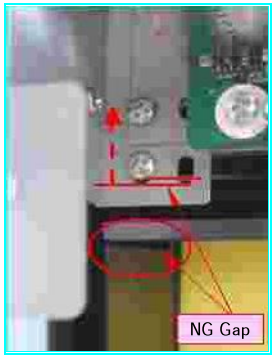

Screw Side Panel-L/R Assy after drawing to Side Panel to a rear side.
Confirm in view of the table side, there is no space of Side Panel and Panel after screw clamp.

●BT B 3BBC 3×8 4
tightening torque 8Kgf･Cm

TITLE

LCD/SSD/FAN **Assy**

MODEL

KRONOS－61/73/88

1

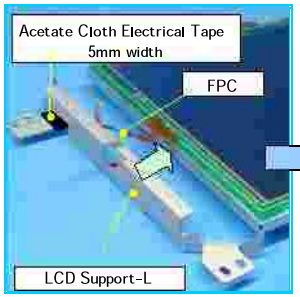

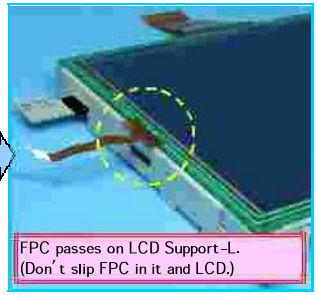

Wrap the Acetate tape(5mm width) around LCD Support-L twice.
Do not make space bend point of

Insert the arrow part of LCD Support-L in the space between LCD and Touch Panel as for.

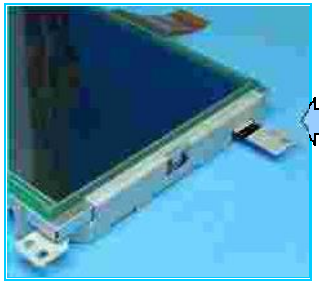

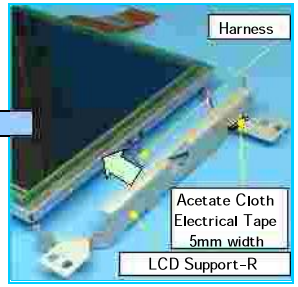

Wrap the Acetate tape(5mm width) around LCD Support-R twice.
Do not make space bend point of

The harness is put out downward through the inside of metal fittings
(Do not pass the corner hole of metal fittings)

Insert the arrow part of LCD Support-R in the space between LCD and Touch Panel as for.

2

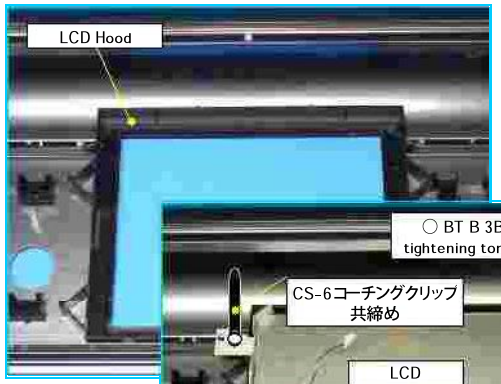

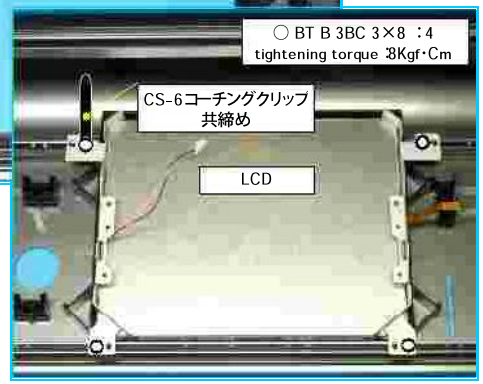

3

4

Cut the Touch Panel Tape-L in four capitation and paste.

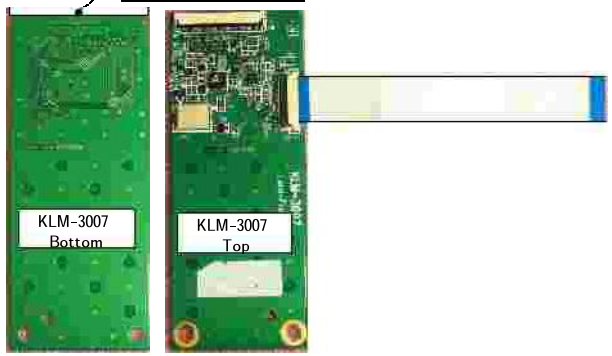

1

Notice) the screw tightening torque of SSD is lower than other parts.

2

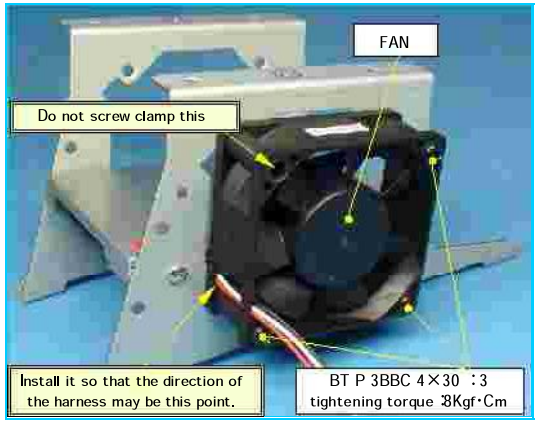

Install FAN so that the label may become direction of the inside.

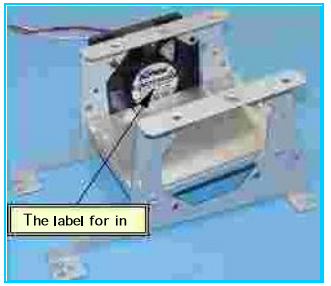

5

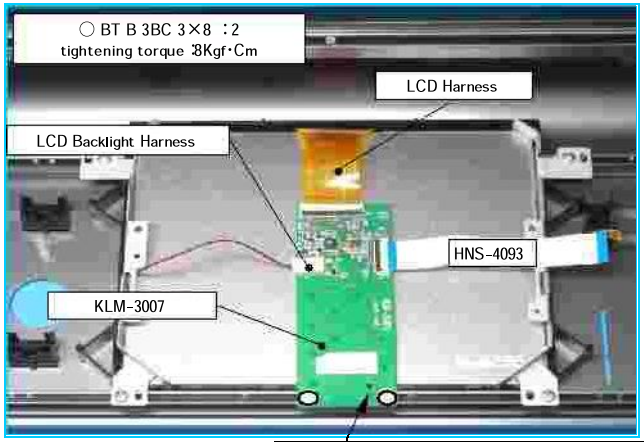

Fit the hole of PC Board to LCD Hood positioning pin.

TITLE

Power Unit **Assy**

MODEL

KRONOS 61／73／88

61KEY dedicated POWER Unit Assy

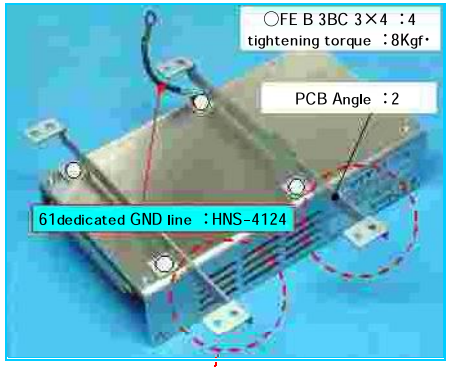

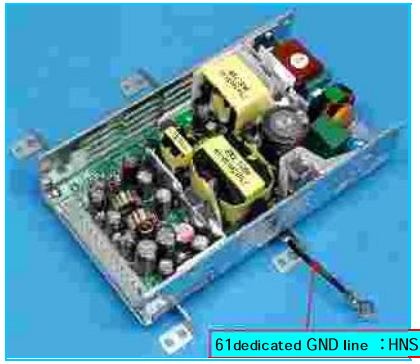

Attention of becoming opposite direction only in case of one of PCB Angle of 61KEY (figure below)
Three both is installed in 73/88KEY for the same.

73/88 KEY dedicated POWER Unit Assy

1

Fit the hole of Power Unit and attached.

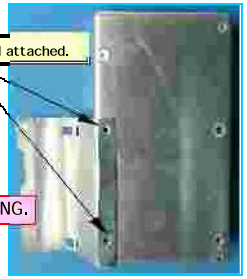

The swelling of the shield paper is NG.

2

3

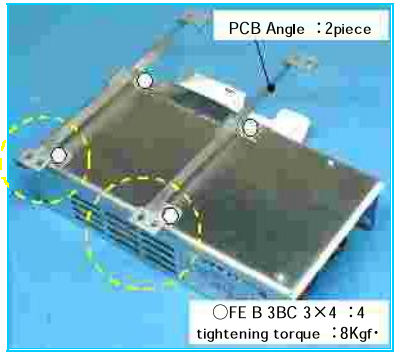

TITLE

Mother Board Assy

MODEL

KRONOS 61/73/88

1

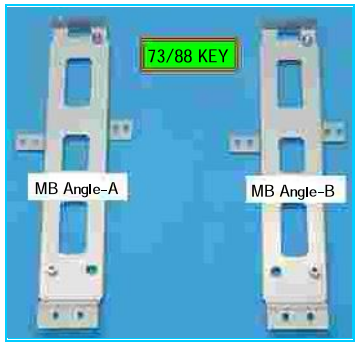

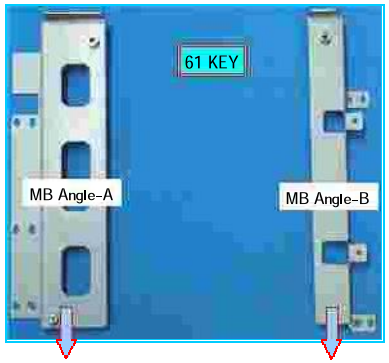

2

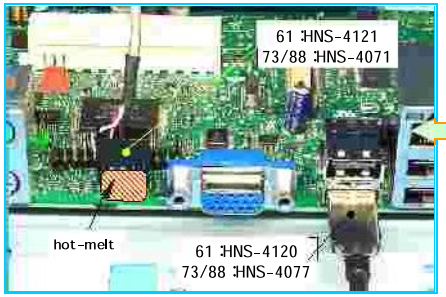

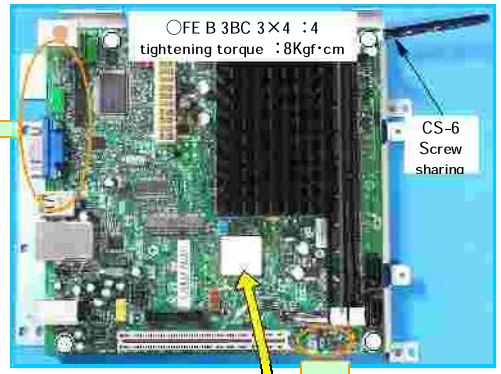

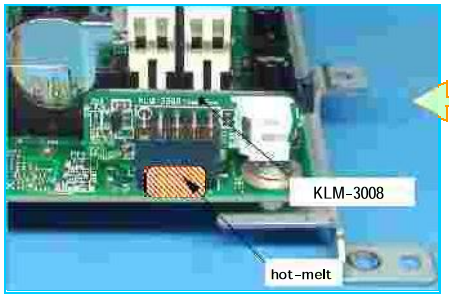

3

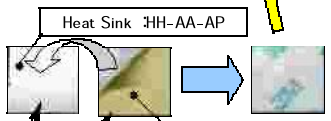

(Note) Don't forget paste at the MB exchange.

double-faced tape :HT-B-A-A

Peel brown released paper of the tape snd paste Heat Sink.

Paste double-faced tape to a metallic side of Heat Sink.

3

Same MB Shield is used for L and for R. The way of folding is only different in L and R. Note that the installation point is different.

Note MB Shield to damage screw clamp easily sometimes.

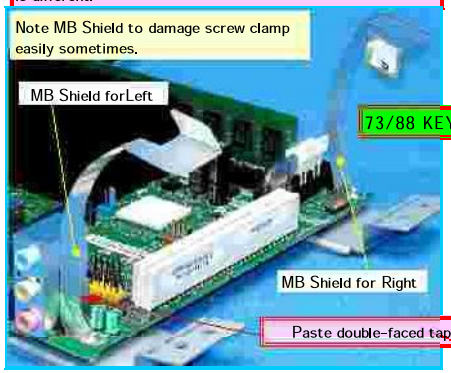

TITLE

PNEL_PCB **Assy**

MODEL

KRONOS 61/73/88

1 →

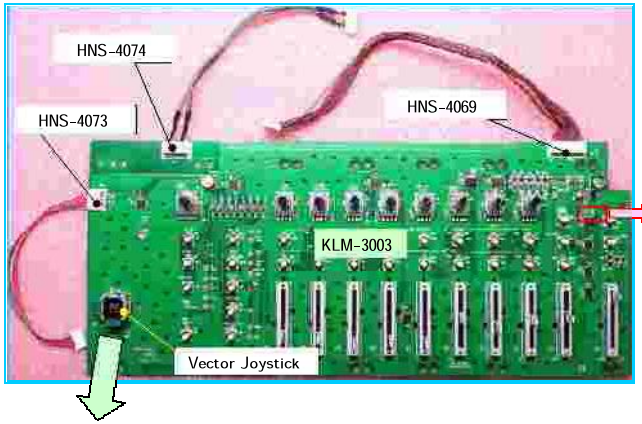

(Note) The mount position of 10K Ω resistance is different for 61/73 keys and for 88 keys in KLM-3003.

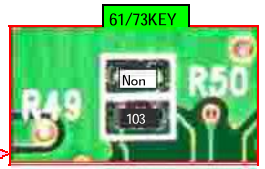

Non ：ﾏｳﾝﾄ無し　103 ：10KΩ

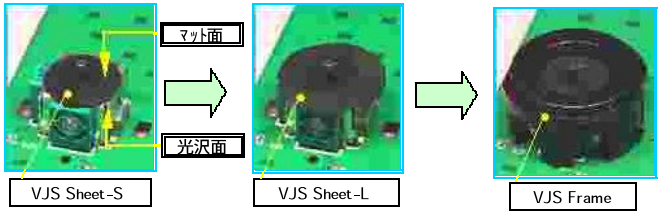

Set up VJS Sheet-S/L bot with the gloss surface turned internally.

Hangs VJS Frame the tab of the stopper to the corner hole of the substrate for fixing.

2 ↓

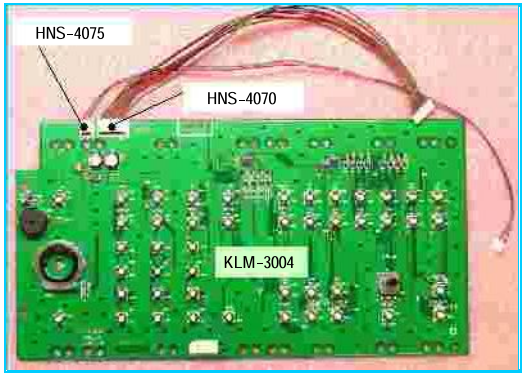

3 ↓

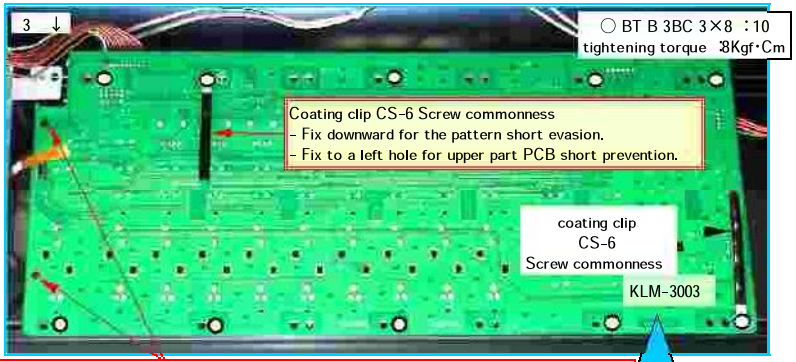

Confirm the positioning pin of the LCD food firmly engages with the positioning hole of PCB.
There is a possibility that some sliders rub when there is a floatage.

KRONOS 61

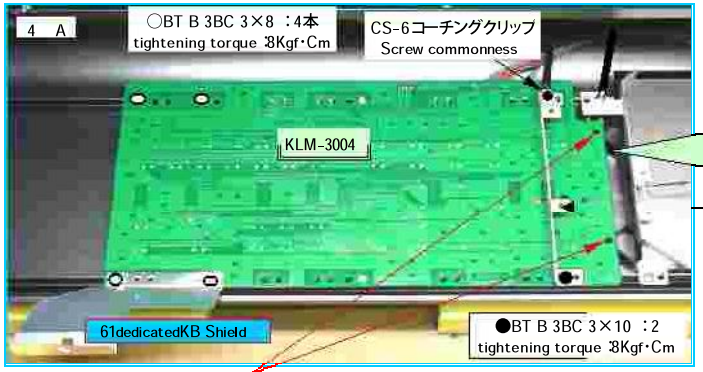

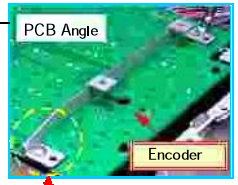

Fix while suppressing it so that the positioning pin of the LCD food may firmly engage with the positioning hole of PCB so that the encoder part of PCB should not float.
The rotation of the encoder rubs if there is a floatage even a little.

(Note) Install the direction of PCB Angle in the opposite direction of PowerUnit Angle only for 61 keys.

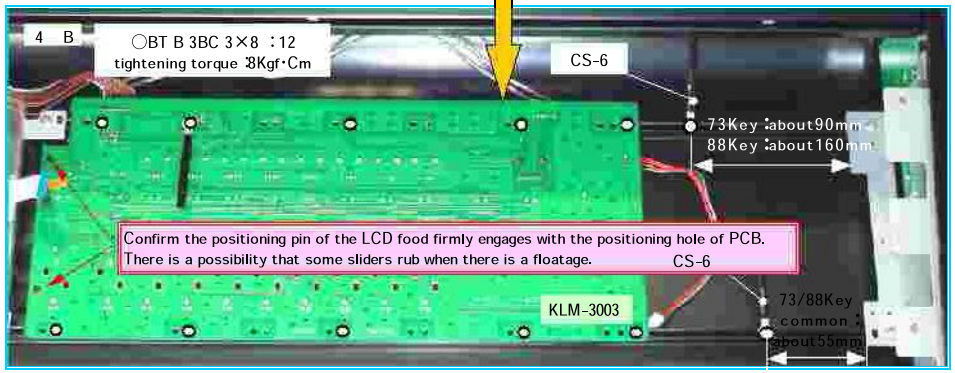

TITLE

FAN/AC_Inlet **Assy**

MODEL

KRONOS 61/73/88

1

2

3

Bring the harness together on a rear side of the panel so as not to place the harness with Panel Angle. Put Panel Angle of SSD Assy in the positioning pin in the back and forth four places.

4

The left side sets for 61Key and the right side to enter the hole of 73key as the position-determining pin faces it.
(There is a possibility of coming in contact with the weight of the RH3 keyboard if making a mistake.)

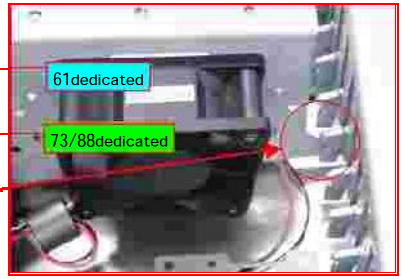

1

(Note) Install AC Inlet in a correct direction because AC Inlet is installed in either direction.

◆ BT B 3BBC 3×8 ：2
tightening torque 8Kgf･Cm

Put out the faston terminal of AC Inlet harness from the switch installation hole.

2

Confirm the terminal is inserted to the root of the switch

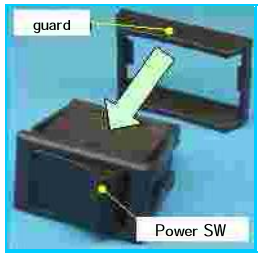

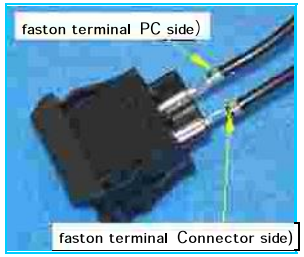

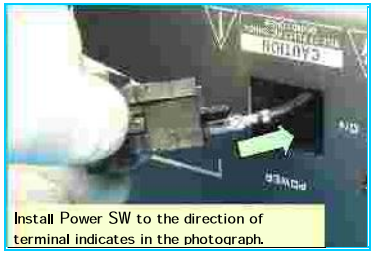

3

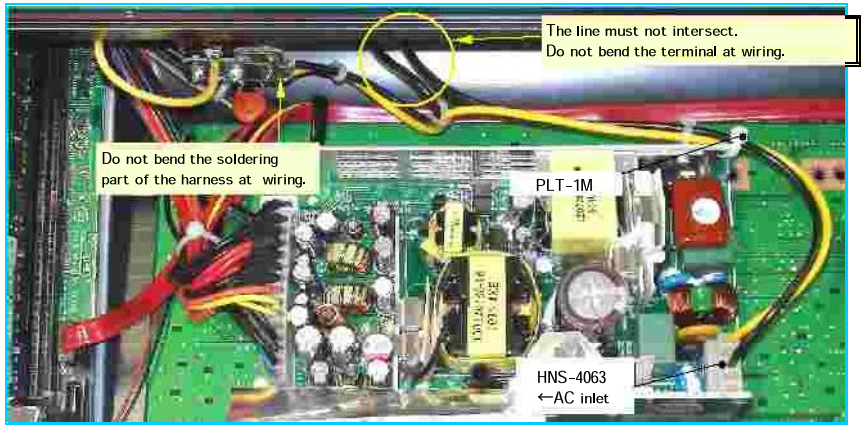

TITLE

Power Cable **Assy**

MODEL

KRONOS 61/73/88

1

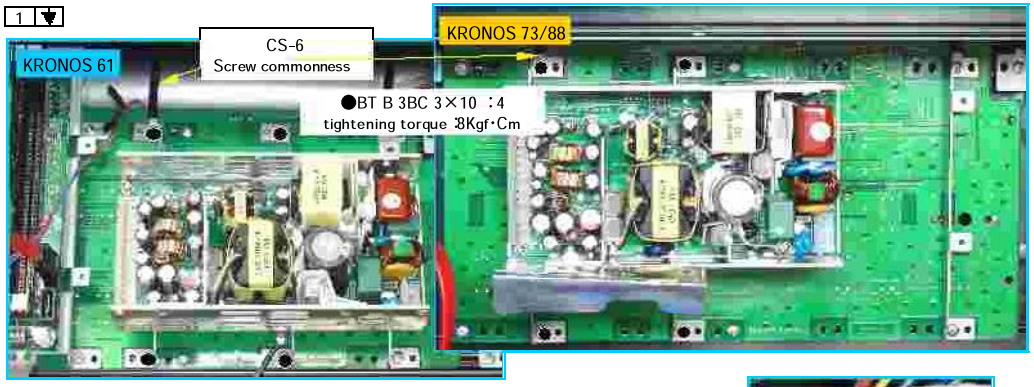

2

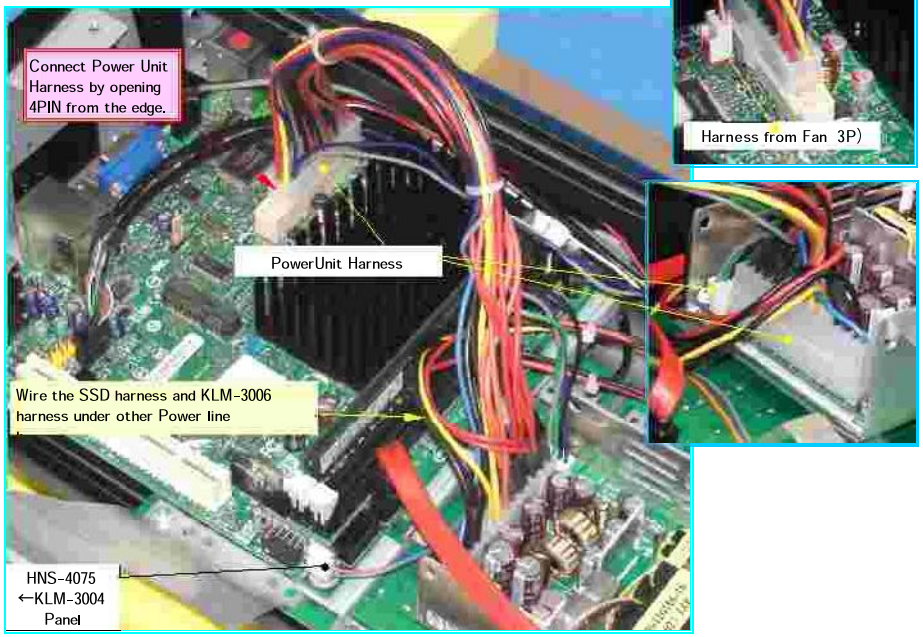

3

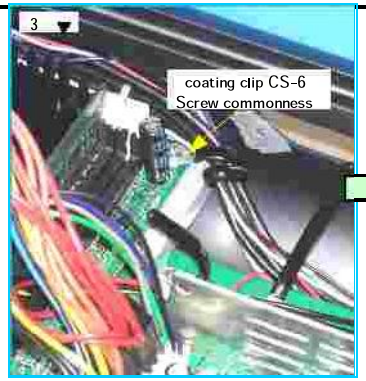

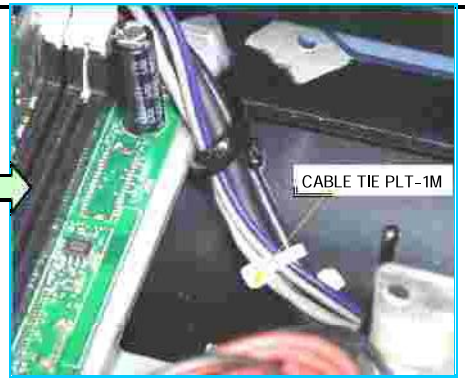

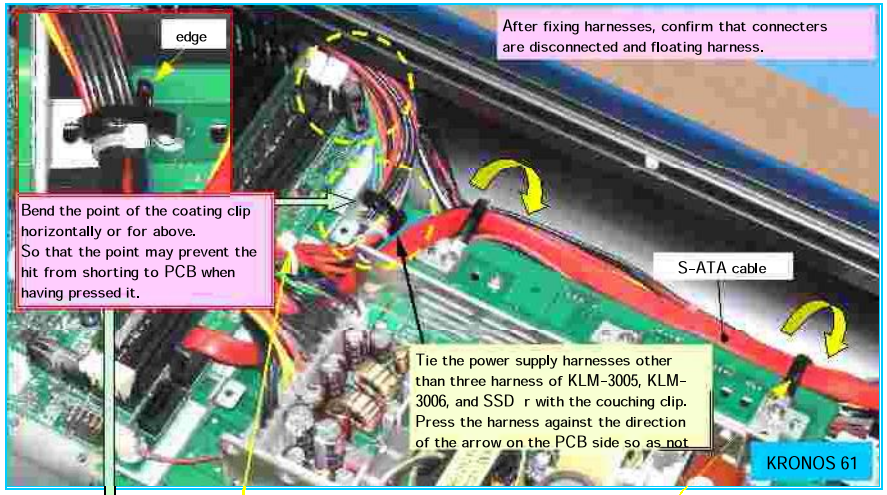

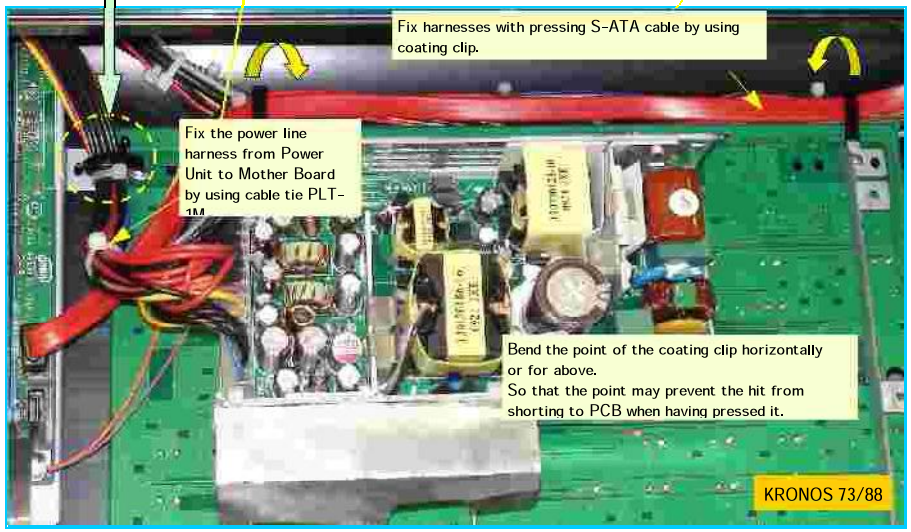

TITLE

JAC_PCB **Assy**

MODEL

KRONOS 61/73/88

1

Install the two Rotary VR Knob and two Power switch knob before fixing PCB.

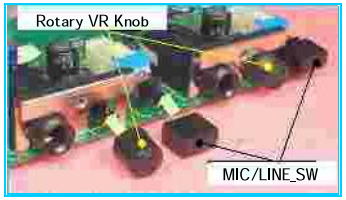

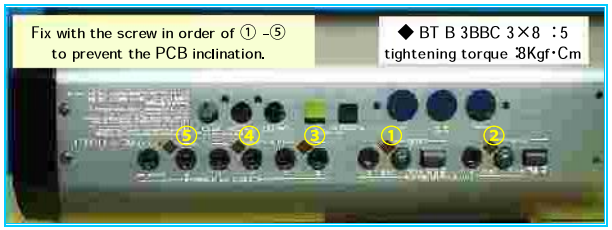

Push Rotary VR Knob until click.
(note) It rubs against the panel if it is insufficient

Confirm the rubbing of Rotary VR Knob and the panel after the installation.
Pass or fail when there is rubbing
OK; It doesn't resist the rotation.

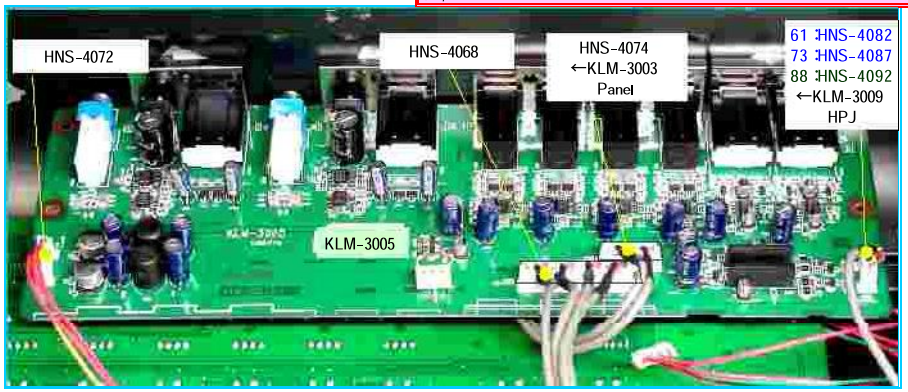

2

3

ONLY 61KEY

(Note) The mount position of 10KΩ resistance is different for 61 keys and for 73/88 keys in KLM-3006.

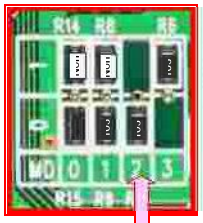

:no
:10KΩ

73/88KEY

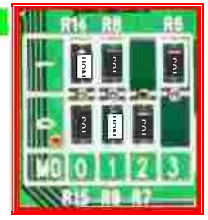

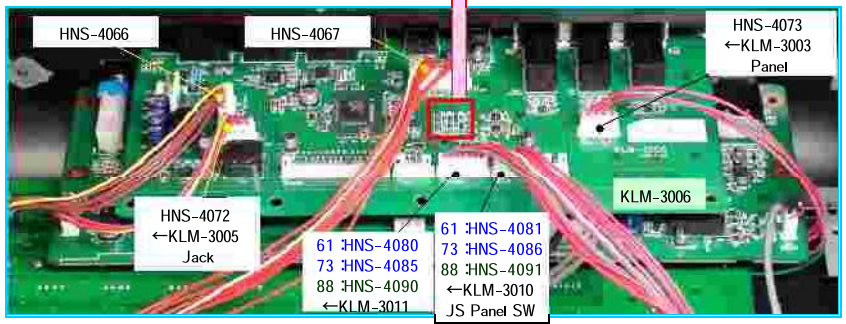

4

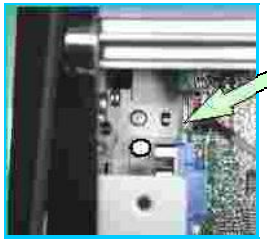

○ BT B 3BC 3×8 :2 tightening torque :8Kgf･Cm

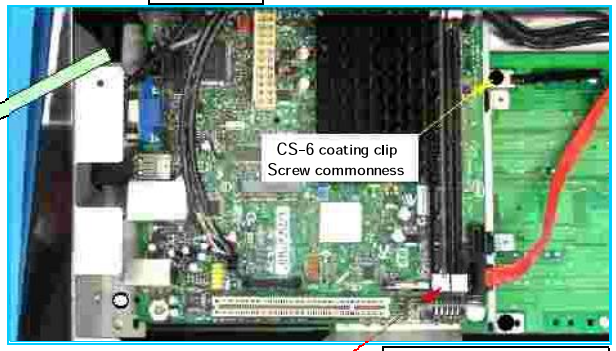

● BT B 3BC 3×10 :2 tightening torque :8Kgf･Cm

Confirm the lock lever of the memory is locked (four places in total).

5

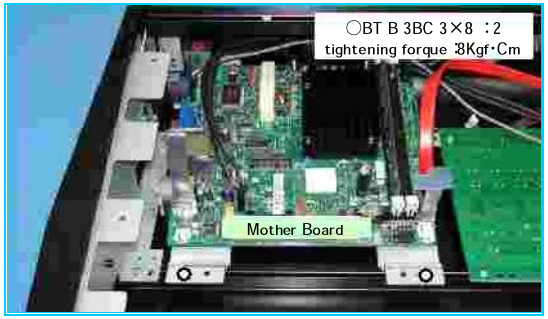

TITLE

Jac Cable **Assy**

MODEL

KRONOS 61／73／88

KRONOS-73/88 写真は73)

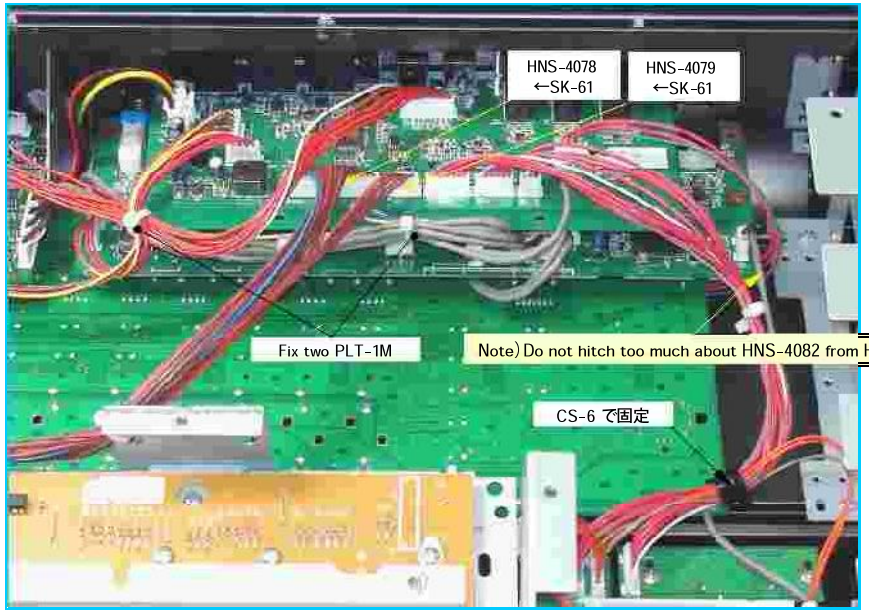

KRONOS-73/88 This photo is 73)

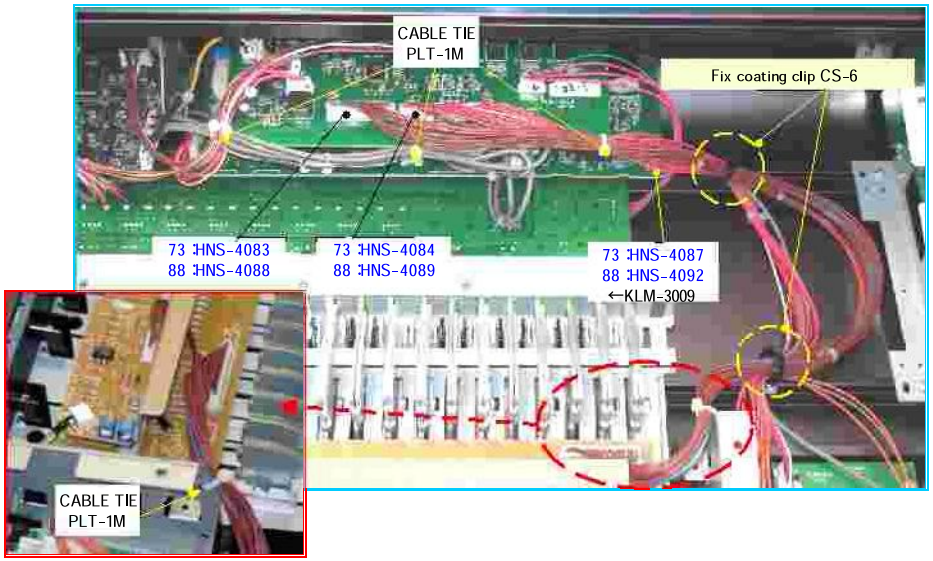

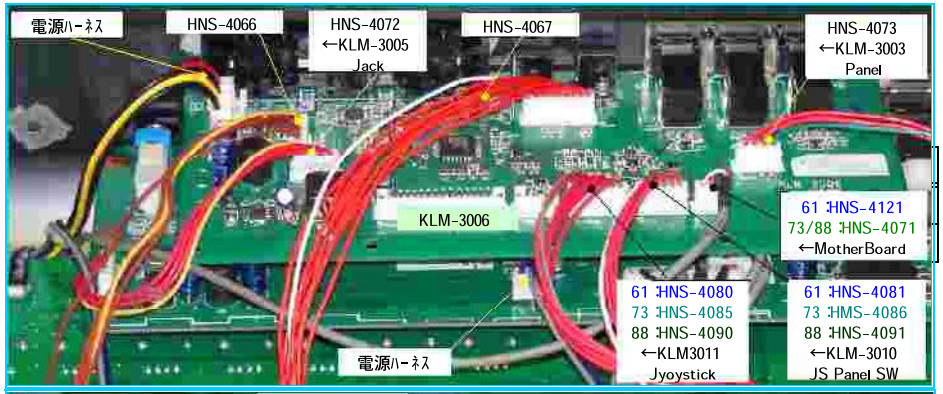

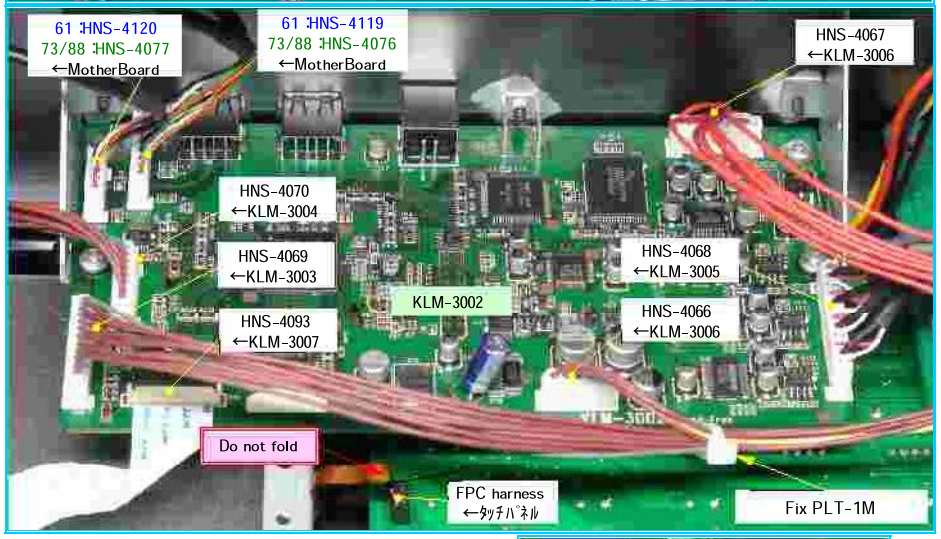

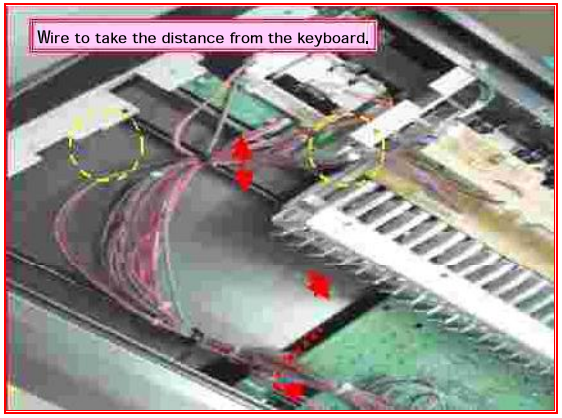

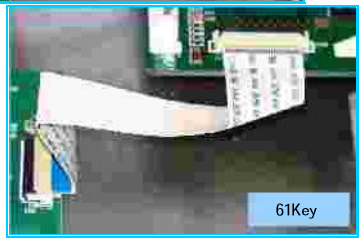

TITLE

KBD/Bottom Cover Assy

MODEL

KRONOS 61

1

Peel off the double-faced tape pasted to KB Shield.
Suit and paste the hole position.

2

Fix the Keyboard harness by using GND cable and screwed.

3

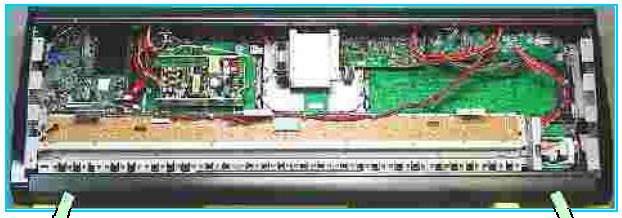

Front Bar is lowered vertically on and set.

Match the point of Front Bar and JS Panel

4

○ BT B 3BC 4×10 :29
tightening torque 8Kgf･Cm

● FF-004 :5

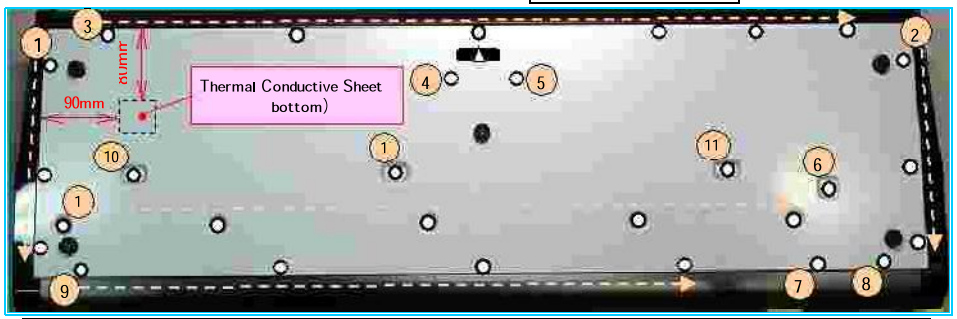

Tighten with the screw in order from ① to ⑬.

Do according to the following procedure when you tighten the screw of ⑩.
The keyboard is pushed up by the hand.
The screw hole of the keyboard must match the position of the bottom plate screw hole.

※ Do according to the following procedure when you tighten the screw of⑥⑦⑧
Hold the JS panel, the bottom plate, and BAR by the hand so that there is no space.

5

Set SlideVR MAX and insert Sliderknob on the panel side. (To arrange height preventing the difference passing.)

TITLE

73&88 KBD_Bottom Cover Assy

MODEL

KRONOS 73／88

1

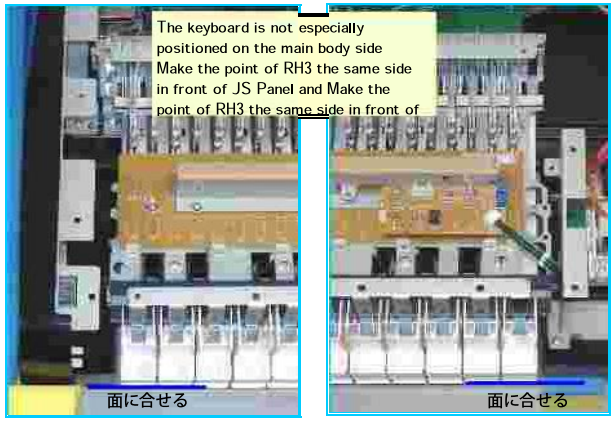

2 MB Shield and PWR Shield are pasted to the chassis of RH3.

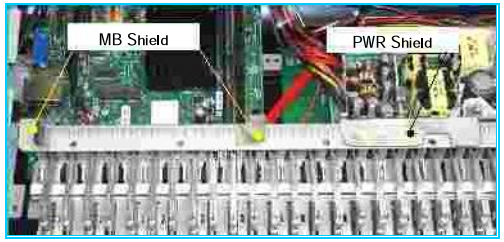

3

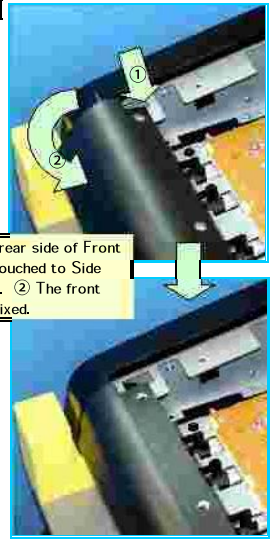

Pass Phone Jack on HP PCB Assy through the hole of Front Bar, and threadably mounted on Side Shassis

4

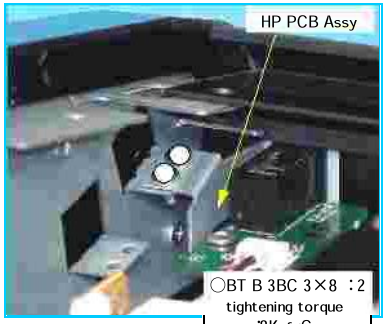

Front Baris stopped in the screw. Make a right and left space the same. Make Front Bar and JS Panel nospace. Make Front Bar and Key Block no space.

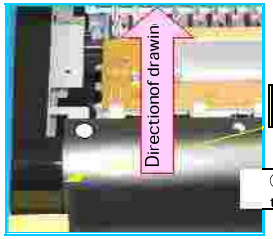

Make a right and left space the same.

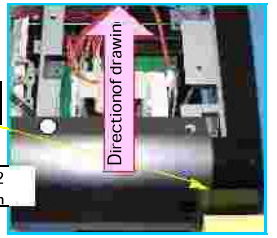

○TS B SSE 3BC 4×10 ：2
tightening torque 8Kgf･Cm

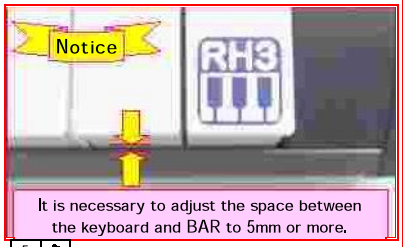

5

6

※Set SlideVR MAX and insert Sliderknob on the panel side.(To arrange height preventing the difference

○ゴムアシ K-24W ：5
TP1 T 3BBC 3.5×12 ：5
tightening torque ：8Kgf･cm

●BT FEW 3BBC 4×20 ：15
tightening torque ：8Kgf･cm

RH3 Special screw

■FE WSE1 3BBC 5×20 ：8
tightening torque ：15Kgf･cm

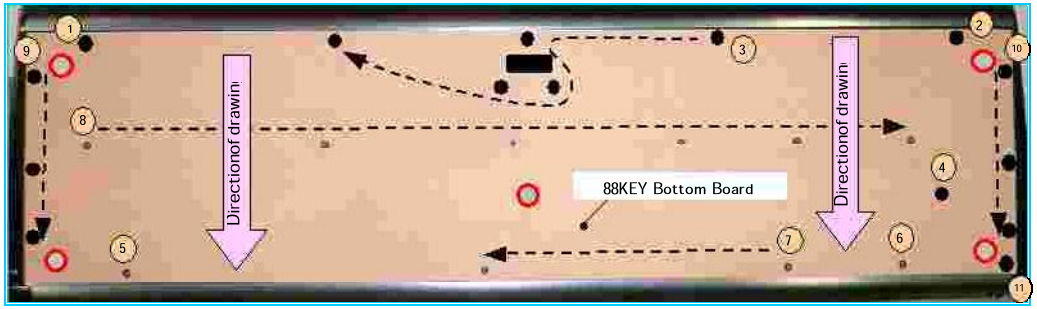

TITLE			
Add LCD Spacer			
MODEL			
KRONOS 73/88			

Add LCD Spacer(500540028944 X09131 LCD SPACER F41729) when it is because LCD Hood Top comes in contact with Touch Panel and the trouble that cannot be turned off occurs.
(Note) This solution are unnecessary in 61Key.

Solution

1)Set LCD Spacer to the corner in the part on the LCD HOOD Top side that fell by one step.
2)Open an even space right and left and paste it.

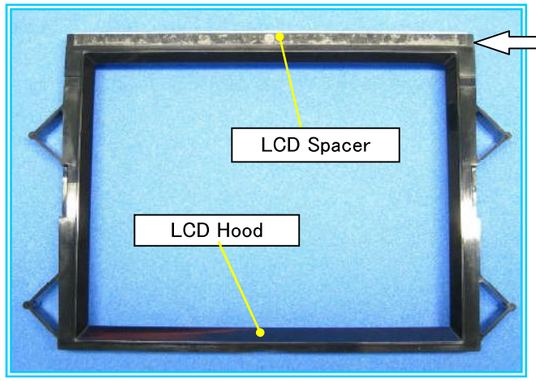

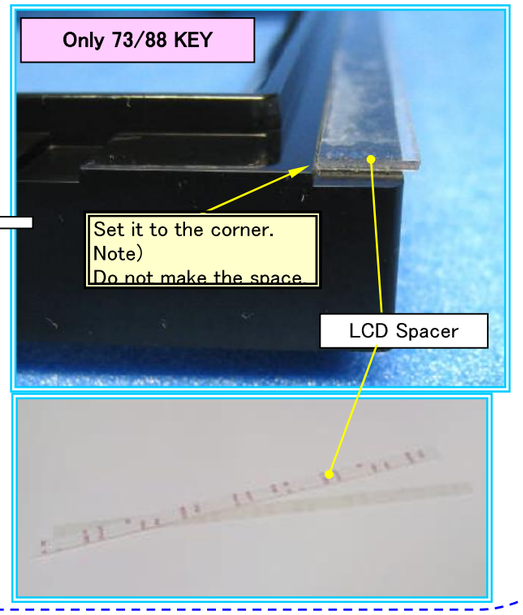

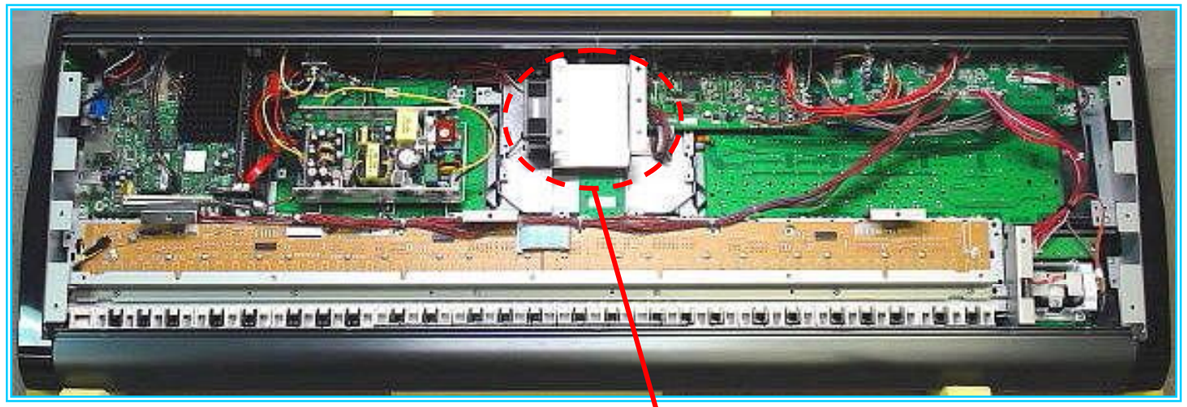

1)Make them slide into under LCD Hood.
2)Fix with the tape.

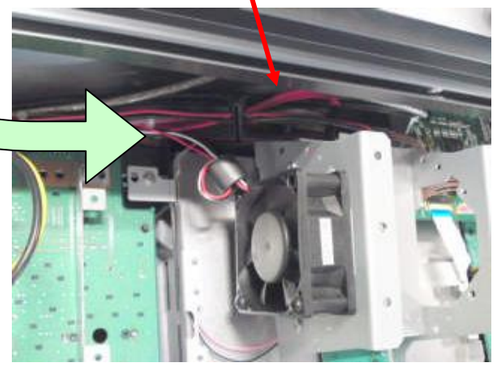

There is a necessity for removing a lot of parts to do the above-mentioned measures.
The method of not removing parts is shown below.

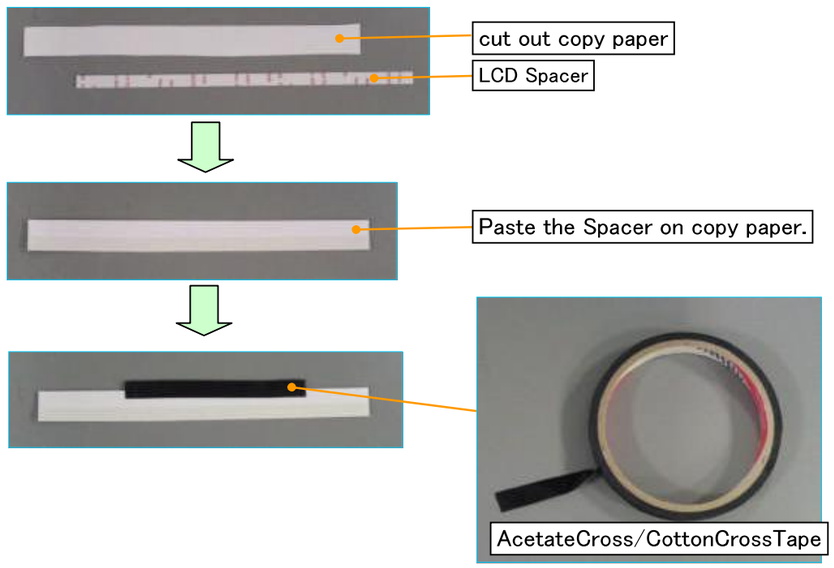

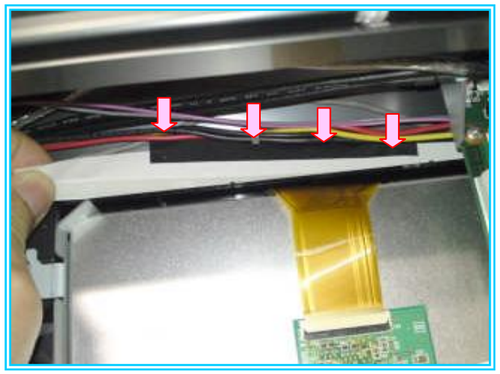

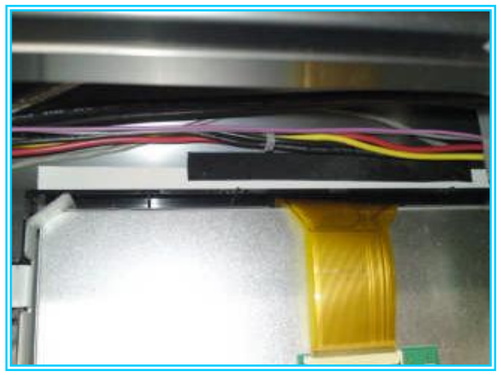

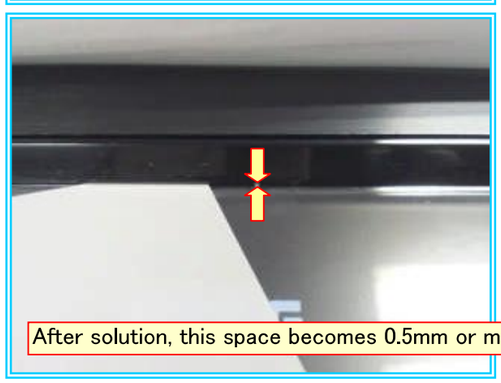

After solution, this space becomes 0.5mm or more.