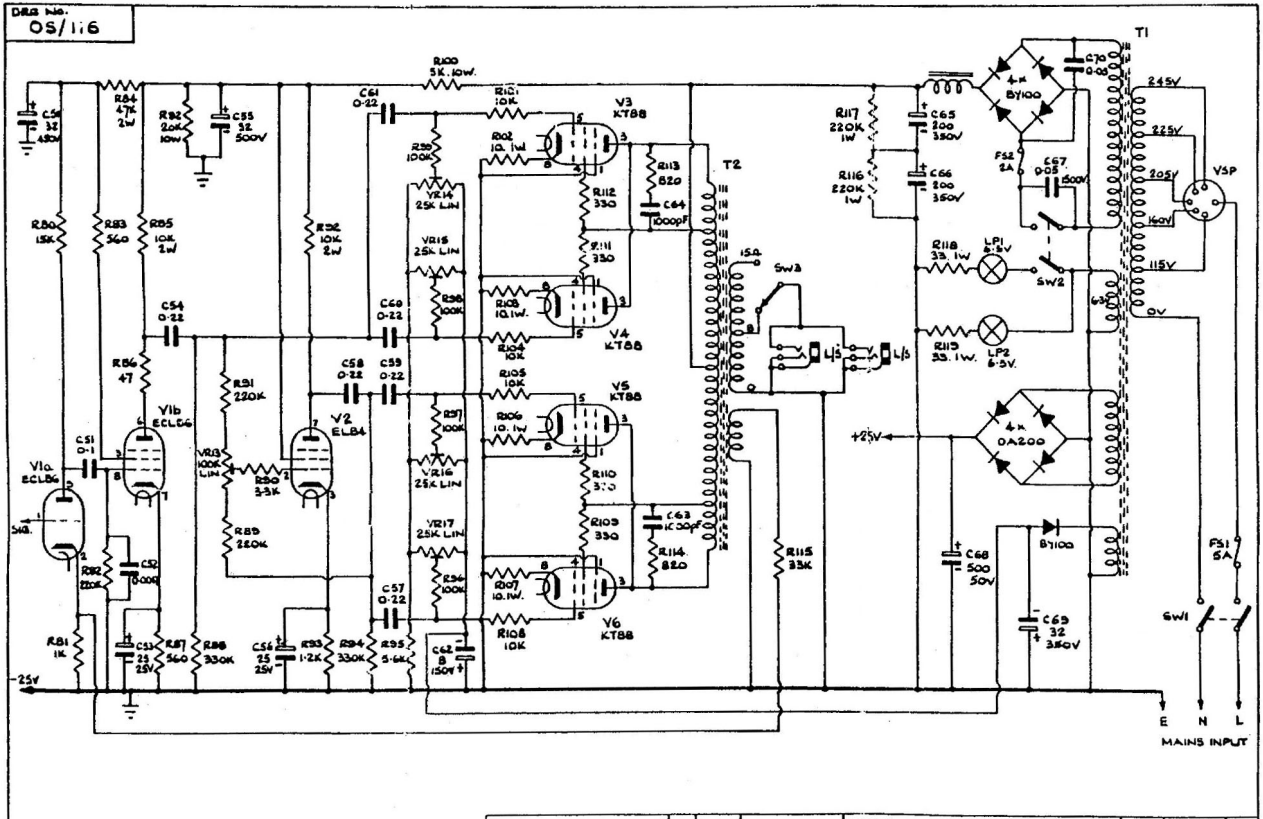
DRG No.
OS/116
V1a
ECL86
V1b
ECL86
V2
EL84
V3
KT88
V4
KT88
V5
KT88
V6
KT88
T1
T2
4x
BY100
4x
OA200
B7100
VSP
SW1
SW2
SW3
LP1
6.3V
LP2
6.3V
FS1
5A
FS2
2A
245V
225V
205V
160V
115V
63V
0V
+25V
-25V
E
N
L
MAINS INPUT
TITLE
4120/7120 WATT AMPLIFIERS
(POWER END STAGE)
JENNINGS MUSICAL INDUSTRIES LTD.
DARTFORD - KENT.
DRN
CHK
APP
DRG. No.
OS/116
SCALE
MAT'L
FIN.
TOL.
CHANGES
1 17-3-66