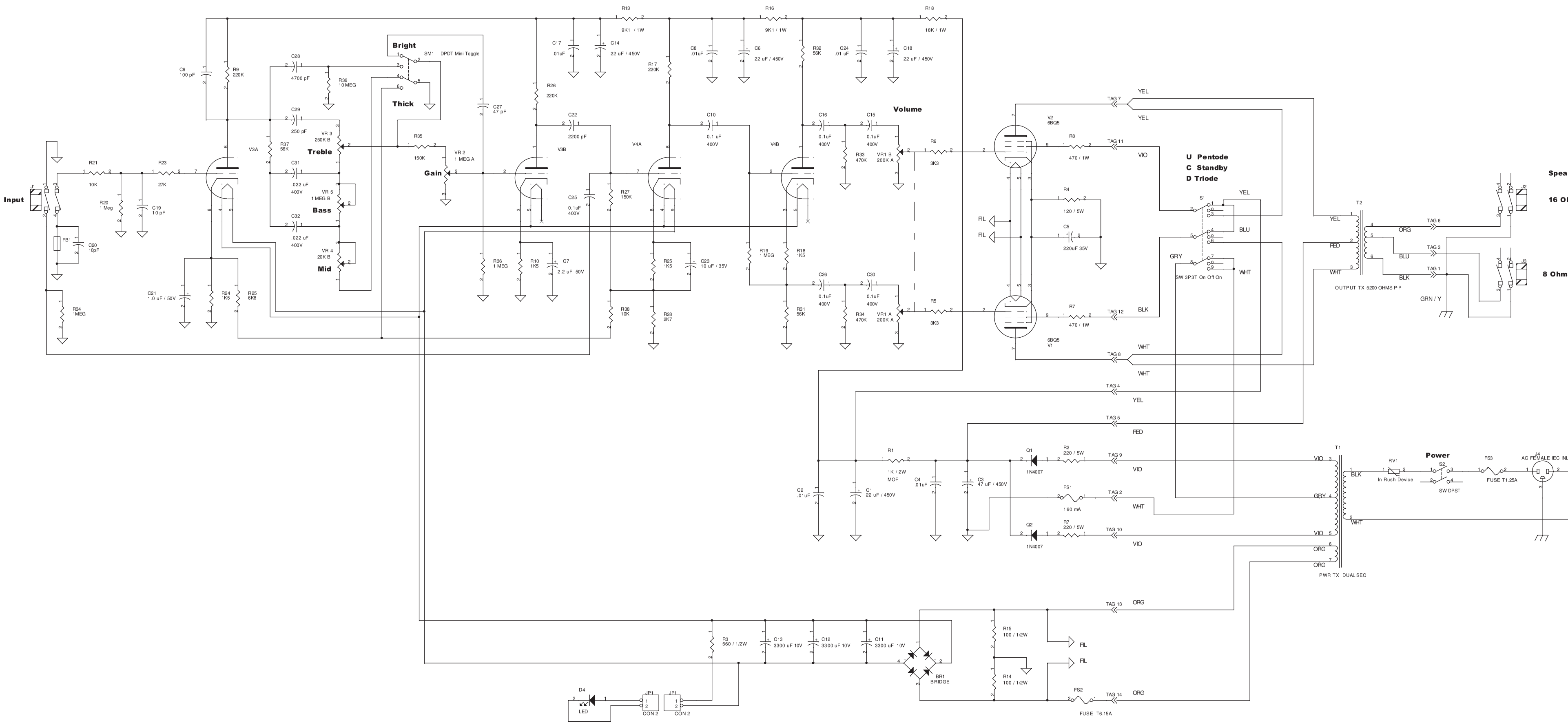

Title		
VOX Night Train NT-15		
Size D	Document Number PCB_NT15H_1001_ISS2	Rev A
Date: Tuesday, July 21, 2009	Sheet 1 of 1	