SAMPLING REVERBERATOR/
DSP EXPANSION BOARD/REMOTE CONTROLLER

SREV1/DB-SREV1/RC-SREV1

SERVICE MANUAL

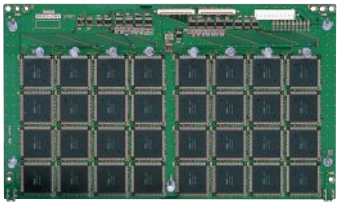

●DB-SREV1

●SREV1

■ **CONTENTS**

This document is printed on chlorine free (ECF) paper with soy ink.

PA 011555 1/2
SREV1: 20001225-500000
RC-SREV1: 20001225-150000
DB-SREV1: 20001225-200000

YAMAHA
HAMAMATSU, JAPAN
1.415K-0671 Printed in Japan '01.02

IMPORTANT NOTICE

This manual has been provided for the use of authorized Yamaha Retailers and their service personnel. It has been assumed that basic service procedures inherent to the industry, and more specifically Yamaha Products, are already known and understood by the users, and have therefore not been restated.

WARNING: Failure to follow appropriate service and safety procedures when servicing this product may result in personal injury, destruction of expensive components and failure of the product to perform as specified. For these reasons, we advise all Yamaha product owners that all service required should be performed by an authorized Yamaha Retailer or the appointed service representative.

IMPORTANT: This presentation or sale of this manual to any individual or firm does not constitute authorization, certification, recognition of any applicable technical capabilities, or establish a principal-agent relationship of any form.

The data provided is belived to be accurate and applicable to the unit(s) indicated on the cover. The research engineering, and service departments of Yamaha are continually striving to improve Yamaha products. Modifications are, therefore, inevitable and changes in specification are subject to change without notice or obligation to retrofit. Should any discrepancy appear to exist, please contact the distributor's Service Division.

WARNING: Static discharges can destroy expensive components. Discharge any static electricity your body may have accumulated by grounding yourself to the ground bus in the unit (heavy gauge black wires connect to this bus).

IMPORTANT: Turn the unit OFF during disassembly and parts replacement. Recheck all work before you apply power to the unit.

LITHIUM BATTERY HANDLING

This product uses a lithium battery for memory back-up.

WARNING: Lithium batteries are dangerous because they can be exploded by improper handling. Observe the following precautions when handling or replacing lithium batteries.

- Leave lithium battery replacement to qualified service personnel.
- Always replace with batteries of the same type.
- When installing on the PC board by soldering, solder using the connection terminals provided on the battery cells.
- Never solder directly to the cells. Perform the soldering as quickly as possible.
- Never reverse the battery polarities when installing.
- Do not short the batteries.
- Do not attempt to recharge these batteries.
- Do not disassemble the batteries.
- Never heat batteries or throw them into fire.

ADVARSEL!

Lithiumbatteri-Eksplosionsfare ved fejlagtig håndtering. Udskiftning må kun ske med batteri af samme fabrikat og type. Levér det brugte batteri tilbage til leverandøren.

VARNING

Explosionsfara vid felaktigt batteribyte.
Använd samma batterityp eller en ekvivalent typ som rekommenderas av apparattillverkaren.
Kassera använt batteri enligt fabrikantens instruktion.

VAROITUS

Paristo voi räjähtää, jos se on virheellisesti asennettu.
Vaihda paristo ainoastaan laitevalmistajan suosittelemaan tyyppiin.
Hävitä käytetty paristo valmistajan ohjeiden mukaisesti.

The following information complies with Dutch Official Gazette 1995. 45; ESSENTIALS OF ORDER ON THE COLLECTION OF BATTERIES.

- Please refer to the diassembly procedure for the removal of Back-up Battery.
- Leest u voor het verwijderen van de backup batterij deze beschrijving.

WARNING: CHEMICAL CONTENT NOTICE!

The solder used in the production of this product contains LEAD. In addition, other electrical/electronic and/or plastic (where applicable) components may also contain traces of chemicals found by the California Health and Welfare Agency (and possibly other entities) to cause cancer and/or birth defects or other reproductive harm.

DO NOT PLACE SOLDER, ELECTRICAL/ELECTRONIC OR PLASTIC COMPONENTS IN YOUR MOUTH FOR ANY REASON WHAT SO EVER!

Avoid prolonged, unprotected contact between solder and your skin! When soldering, do not inhale solder fumes or expose eyes to solder/flux vapor!

If you come in contact with solder or components located inside the enclosure of this product, wash your hands before handling food.

■ WARNING

Components having special characteristics are marked ⚠ and must be replaced with parts having specification equal to those originally installed.

■ SPECIFICATIONS

● SREV1

Sampling rate	**Internal**	48 kHz
	External	44.1 kHz or 48 kHz
Internal processing		32 bit
Program Memories	**2-channel, 4-channel mode**	6 (P01–P06)
	2-channel x2 mode	12 (P01–P12)
Indicators	**INPUT**	SIGNAL x4 (–34 dB), CLIP x4
	OUTPUT	SIGNAL x4 (–34 dB), CLIP x4
	FS LOCK	48K, 44.1K
	Others	POWER, PC Card, CD-ROM
PC Card slot		PCMCIA (Type II), PC Card ATA spec, FAT16
CD-ROM drive		ISO9660 Level 2 format
Cooling fan		x2
Power requirements		U.S.A. & Canada 120 V AC, 60 Hz Europe 230 V AC, 50 Hz
Power consumption		120 W
Dimensions (W x H x D)		480 x 141.7 x 451.8 mm (18.9 x 5.6 x 17.8 inches)
Weight		11.5 kg (25.3 lbs)
Free-air operating temperature		5˚ C to 40˚ C (41˚ F to 104˚ F)
Power cord length		2.5 m
Supplied accessories		Power cord, CD-ROM (Reverb programs, data), Owner's Manual
Options		RC-SREV1, DB-SREV1, MY8-AD, MY4-AD, MY4-DA, MY8-AT, MY8-AE, MY8-TD

Digital Input Specifications

Connection	Format	Data Length	Level	Connector
DIGITAL IN 1, 2	AES/EBU	24 bit	RS-422	XLR-3-31 type *1

*1. XLR-3-31 type connectors are balanced (pin 1–ground, pin 2–hot (+), and pin 3–cold (–).

Digital Output Specifications

Connection	Format	Data Length	Level	Connector
DIGITAL OUT 1, 2	AES/EBU *1	24 bit	RS-422	XLR-3-32 type *2

*1. Channel status: Type: 2 audio channels.
Sampling rate: depends on internal configuration.

*2. XLR-3-32 type connectors are balanced (pin 1–ground, pin 2–hot (+), and pin 3–cold (–).

Control I/O Specifications

Connection	Format	Level	Connector
SERIAL 1, 2	—	RS-422	8-pin mini DIN
MIDI IN	MIDI	—	5-pin DIN
MIDI OUT	MIDI	—	5-pin DIN
WORD CLOCK IN	—	TTL 75 Ω	BNC
REMOTE	—	RS-422	9-pin D-sub (female)
SLOT (x2)	mini YGDAI	—	—

Remote Cable Wiring Diagram

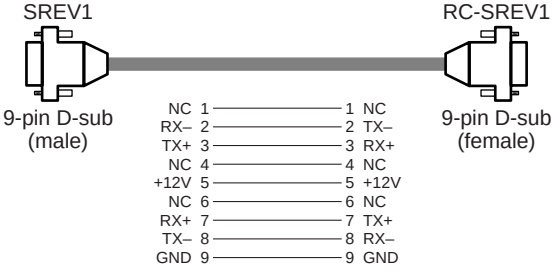

● DB-SREV1

Dimensions (W x H x D): 195 x 15 x 330 mm
Weight: 0.5 kg
Supplied accessories: FPC (Flat Cable) x2
Screw

IMPORTANT NOTICE FOR THE UNITED KINGDOM

Connecting the Plug and Cord

IMPORTANT. The wires in this main lead are coloured in accordance with the following code:
BLUE: NEUTRAL
BROWN: LIVE

As the colours of the wires in the main lead of this apparatus may not correspond with the coloured markings identifying the terminals in your plug, proceed as follows:

The BLUE wire must be connected to the terminal that is marked with the letter N (or coloured BLACK).

The BROWN wire must be connected to the terminal that is marked with the letter L (or coloured RED).

Be certain that neither core is connected to the earth terminal of the three pin plug.

■ PANEL LAYOUT

● Front Panel

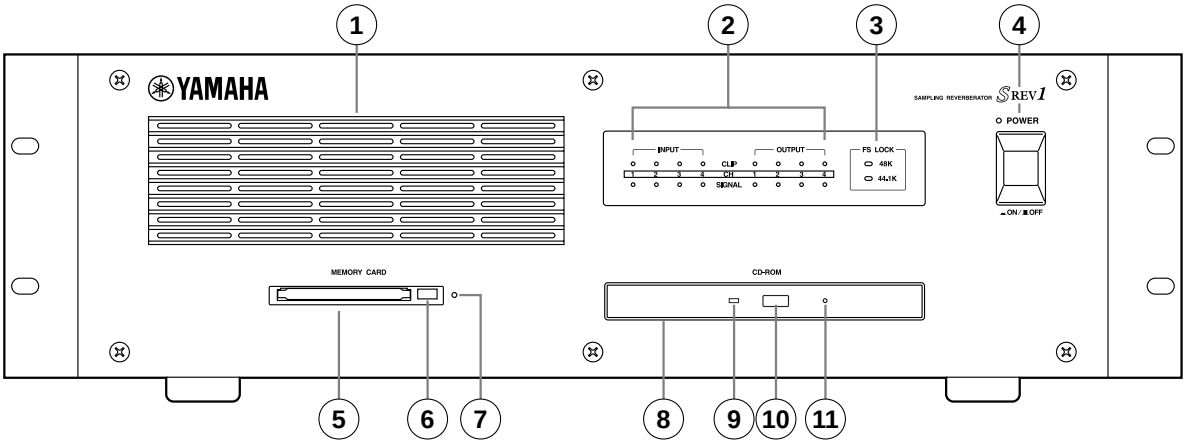

1. Air Inlet
2. INPUT and OUTPUT signal indicators
3. FS LOCK indicators
4. POWER switch & indicator
5. MEMORY CARD slot
6. Memory card eject button
7. Memory card activity indicator
8. CD-ROM drive
9. Disc activity indicator
10. CD-ROM eject button
11. Emergency disc eject hole

● Rear Panel

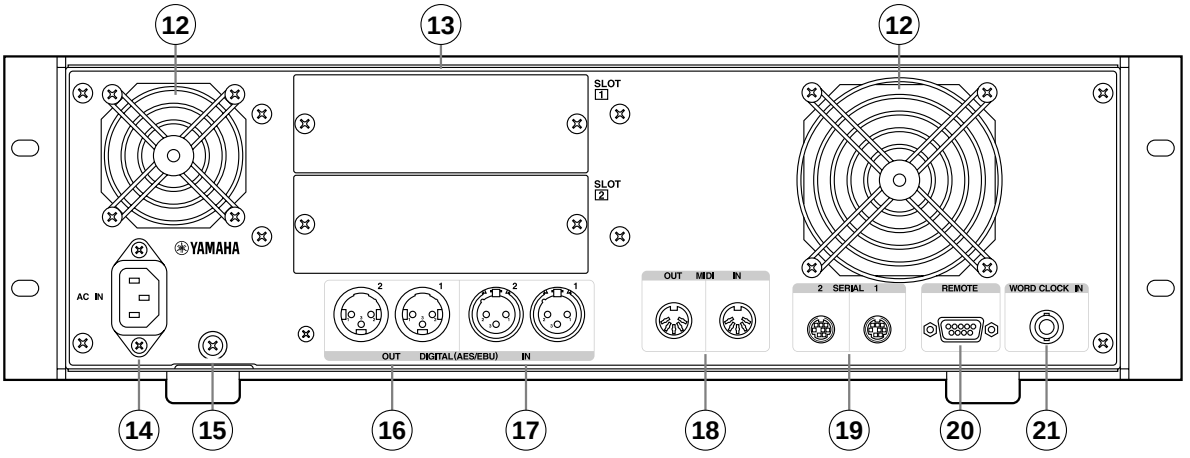

12. Cooling fan outlets
13. SLOTs 1 & 2
14. AC IN connector
15. Grounding screw
16. DIGITAL OUT (AES/EBU) connectors
17. DIGITAL IN (AES/EBU) connectors
18. MIDI IN & OUT ports
19. SERIAL 1 & 2 ports
20. REMOTE port
21. WORD CLOCK IN connector

■ CIRCUIT BOARD LAYOUT

● Top View

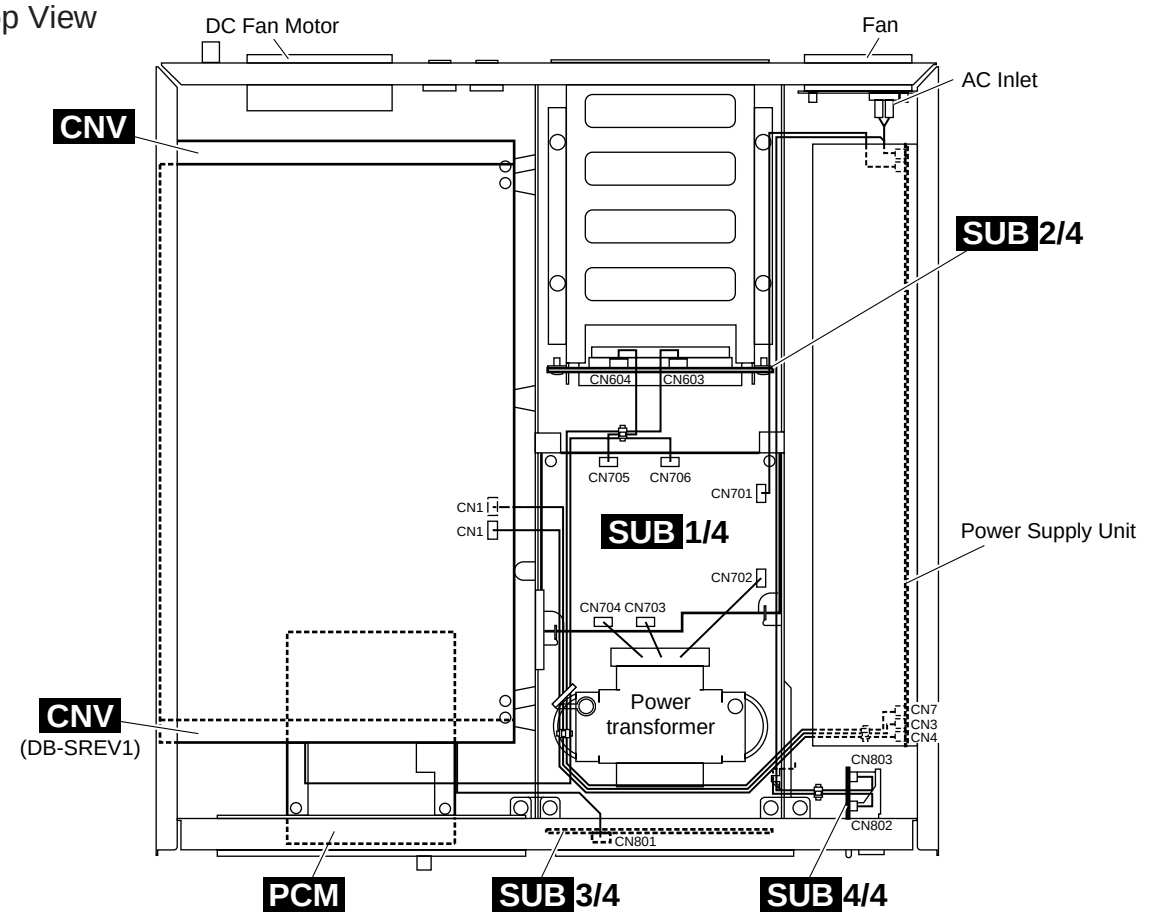

● Bottom View

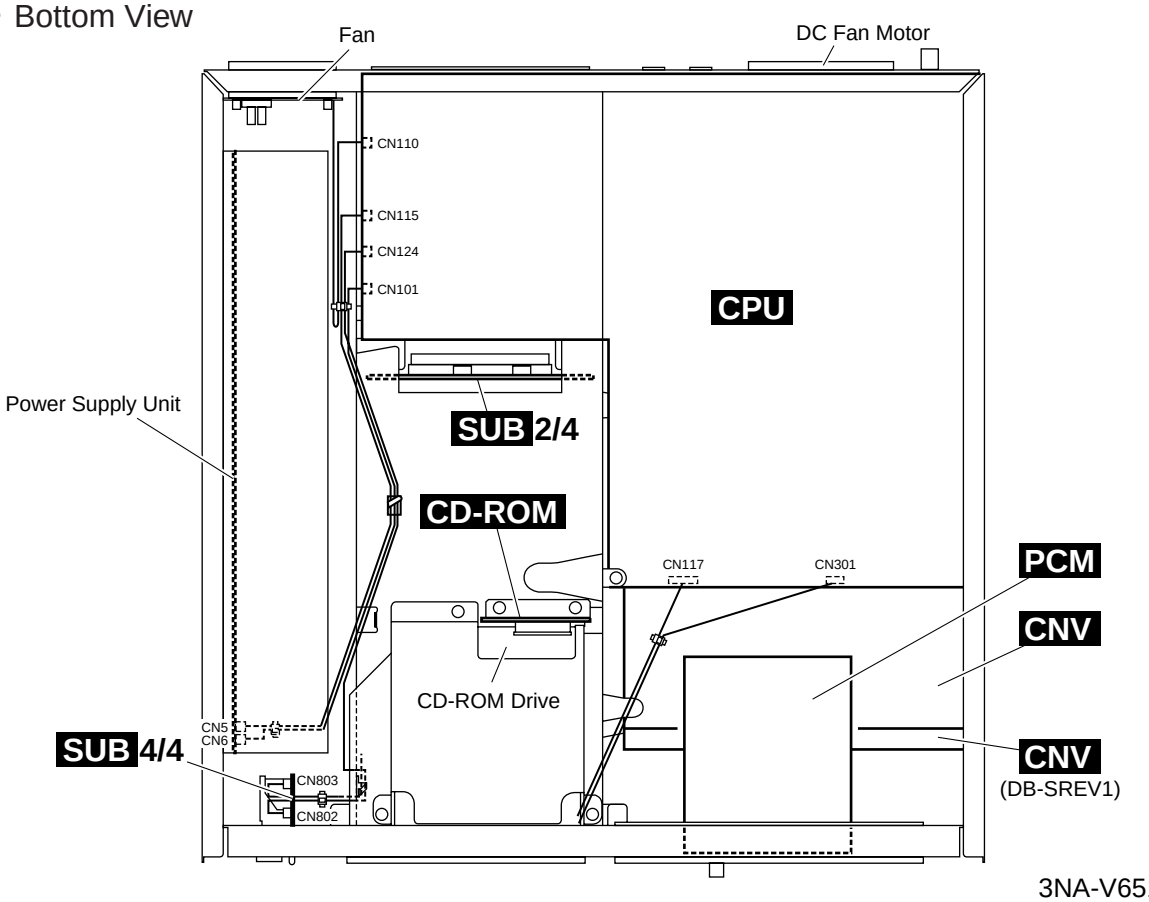

3NA-V651940-3,4

■ DIMENSIONS

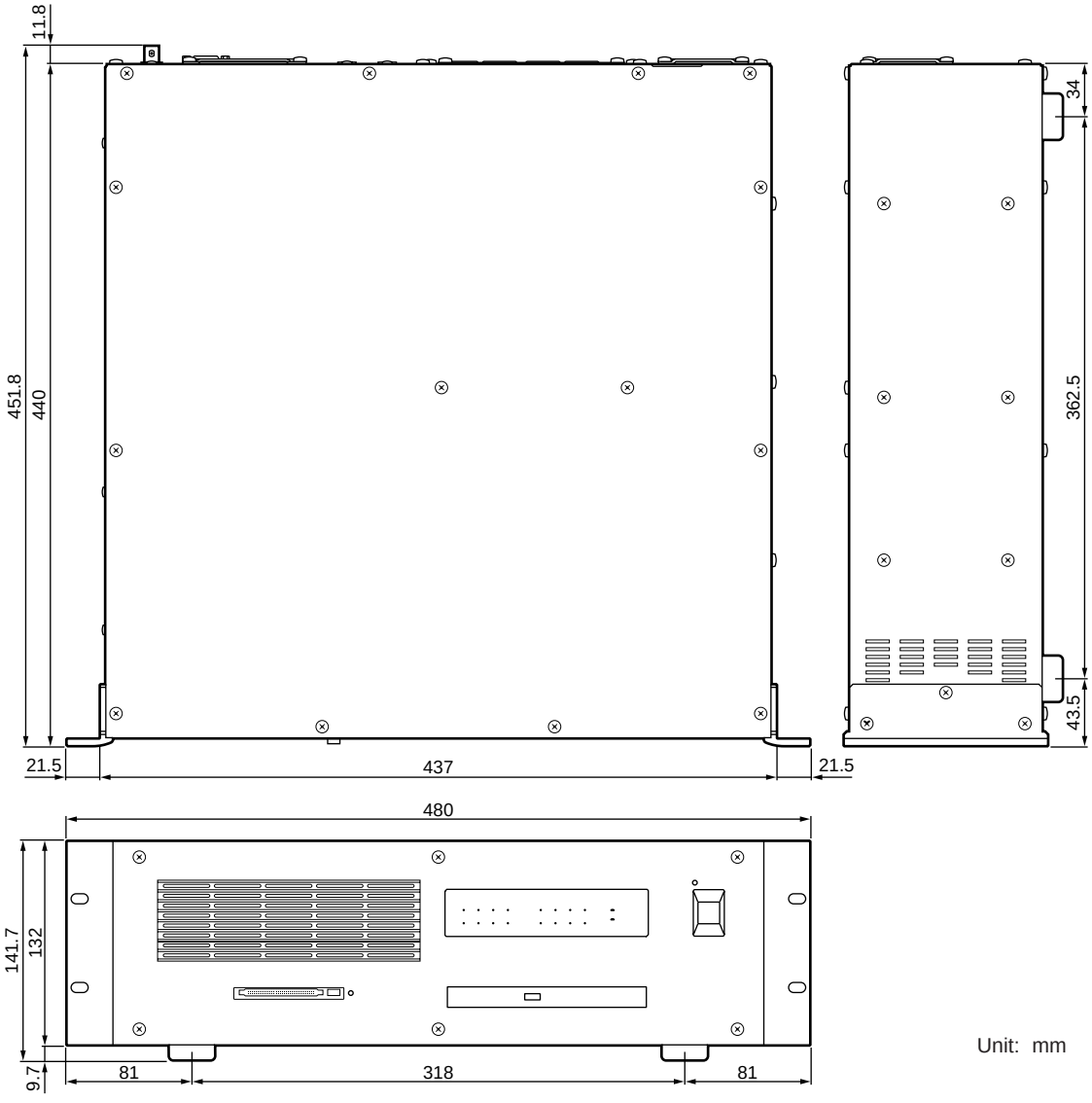

Unit: mm

■ WIRNIG

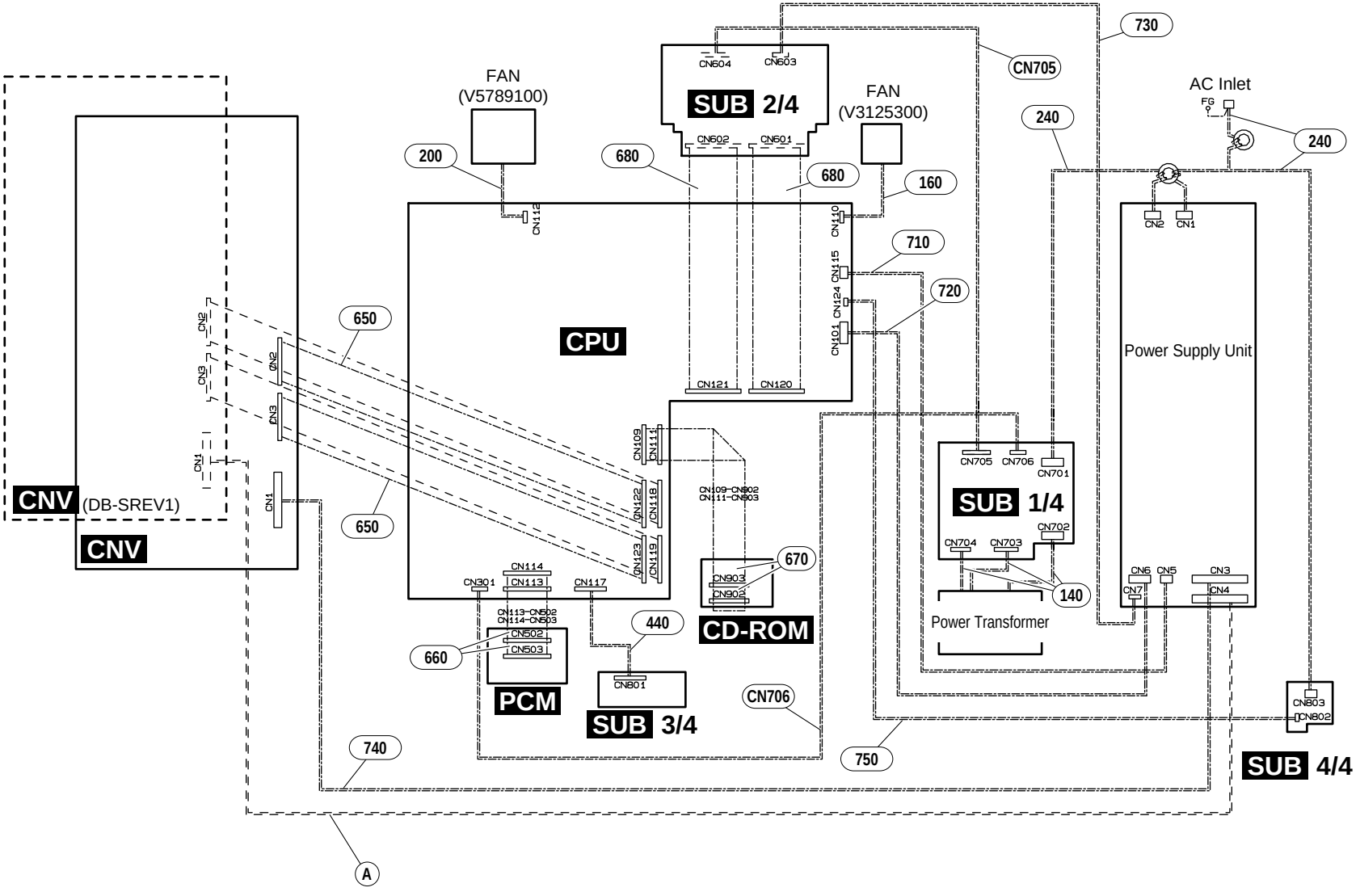

3NA-V651940-2

Location	Part No.	Connector Assembly & Unit	Destination		Remarks
140	XY916A00(J)	Power Transformer	Power Transformer	SUB 1/4-CN702	4P
	XY917A00(U, V)			SUB 1/4-CN703	6P
	XY918A00(H,B,W)			SUB 1/4-CN704	5P
160	V3125300	Fan	Fan	CPU-CN110	3P
200	V5789100	DC Fan Motor	DC Fan Motor	CPU-CN112	3P
240	V6512600	ACIN	AC Inlet	SUB 4/4-CN803	3P
				Power Supply Unit-CN1	
			SUB 1/4-CN701	Power Supply Unit-CN2	4P/3P
440	(VR79270)	KR	CPU-CN117	SUB 3/4-CN801	9P
650	MFA30100		CPU-CN122	CNV-CN2	30P
			CPU-CN123	CNV-CN3	30P
660	MFA30100		CPU-CN113	PCM-CN502	30P
			CPU-CN114	PCM-CN503	30P
670	MFA25300		CPU-CN109	CDROM-CN902	25P
			CPU-CN111	CDROM-CN903	25P
680	MFA36080		CPU-CN120	SUB 2/4-CN601	36P
			CPU-CN121	SUB 2/4-CN602	36P
710	(V651290)	REM-PS	CPU-CN115	Power Supply Unit-CN5	2P
720	(V651300)	CPU-PS	CPU-CN101	Power Supply Unit-CN6	4P
730	(V651310)	YGDA-PS	SUB 2/4-CN603	Power Supply Unit-CN7	4P
740	(V651320)	CNV1-PS	CNV-CN1	Power Supply Unit-CN3	10P
750	(VR78120)	KR	CPU-CN124	SUB 4/4-CN802	2P
A	(V651320)	CNV(Option)-PS	CNV(DB-SREV1)-CN1	Power Supply Unit-CN4	10P
CN705	VY914700	B&C	SUB 1/4-CN705	SUB 2/4-CN604	7P
CN706	VQ613000	B&C	SUB 1/4-CN706	CPU-CN301	4P

■ BLOCK DIAGRAM

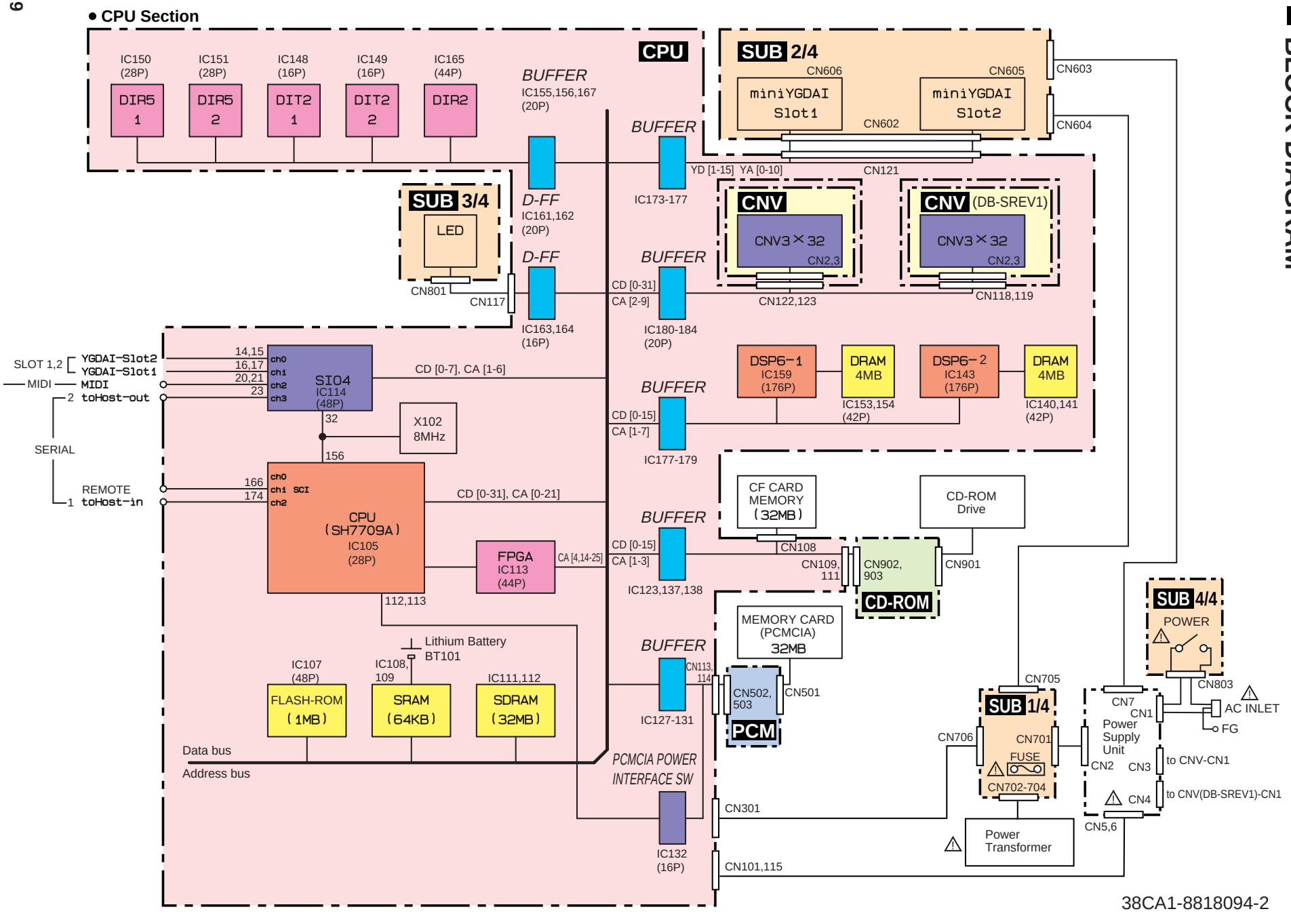

38CA1-8818094-2

- **AUDIO Section**

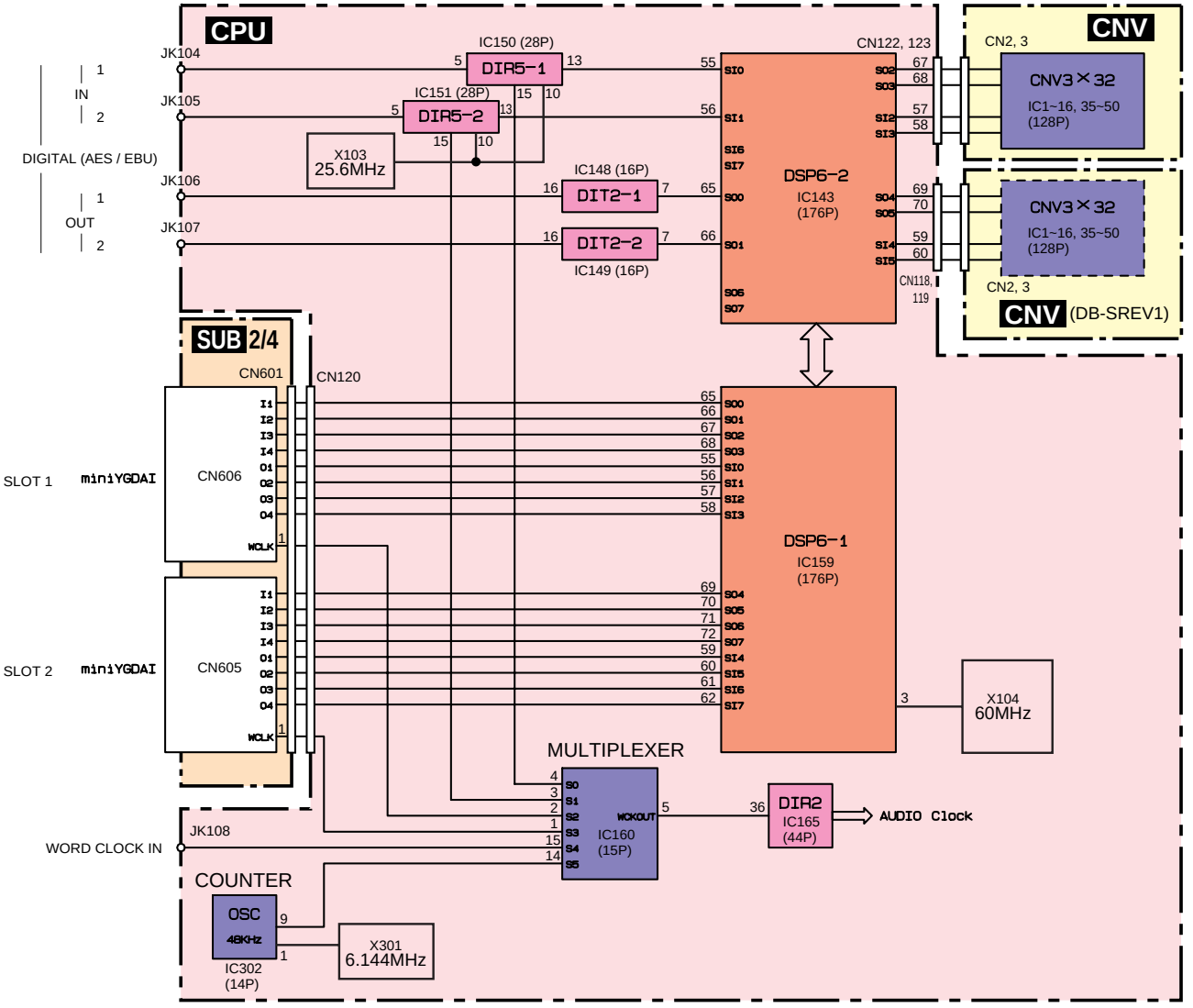

■ DISASSEMBLY PROCEDURE

1. Top Cover (Time required: about 5 minutes)

1-1 Remove the fourteen (14) screws marked [850]. The top cover can then be removed. (Fig. 1)

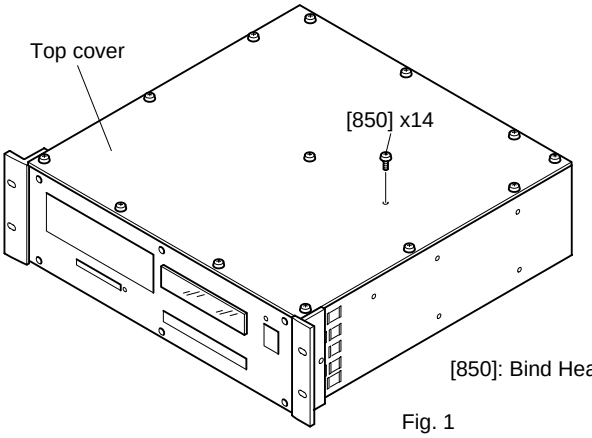

[850]: Bind Head Tapping Screw-B A4.0X8 MFZN2BL (VC688800)

Fig. 1

2. DB-SREV1 (CNV Circuit Board)

(Time required: about 8 minutes)

2-1 Remove the top cover. (See procedure 1.)

2-2 Remove the two (2) screws marked [A] and the two (2) screws marked [B]. The CNV circuit board (DB-SREV1) can then be removed. (Fig. 2, 3)

3. CNV Circuit Board

(Time required: about 10 minutes)

3-1 Remove the top cover. (See procedure 1.)

3-2 Remove the DB-SREV1 CNV circuit board, if it is being installed. (See procedure 2.)

3-3 Remove the two (2) screws marked [350] and the two (2) screws marked [360]. The CNV circuit board can then be removed. (Fig. 2, 3)

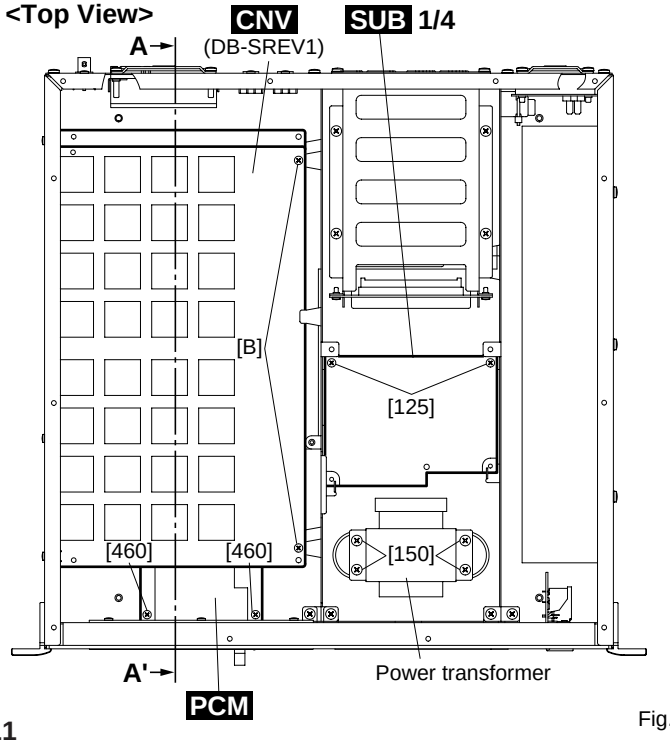

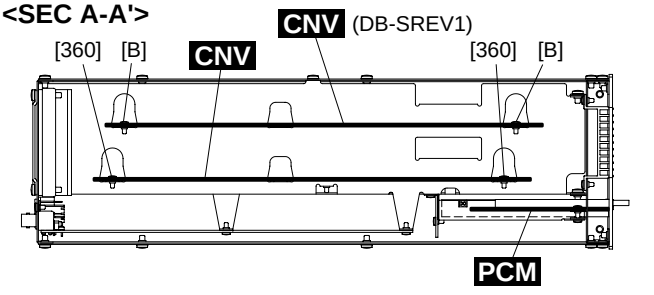

[B]: Bind Head Tapping Screw-B 3.0X8 MFZN2BL (EP600190)
[125]: Bind Head Tapping Screw-B 3.0X8 MFZN2BL (EP600190)
[150]: Bind Head Tapping Screw-B A4.0X8 MFZN2BL (VC688800)
[360]: Bind Head Tapping Screw-B 3.0X8 MFZN2BL (EP600190)
[460]: Bind Head Tapping Screw-B 3.0X8 MFZN2BL (EP600190)

Fig. 2

4. PCM Circuit Board

(Time required: about 15 minutes)

4-1 Remove the top cover. (See procedure 1.)

4-2 Remove the DB-SREV1 CNV circuit board, if it is being installed. (See procedure 2.)

4-3 Remove the CNV circuit board. (See procedure 3.)

4-4 Remove the two (2) screws marked [460]. The PCM circuit board can then be removed. (Fig. 2)

5. Power Transformer, SUB 1/4 Circuit Board

(Time required: about 8 minutes each)

5-1 Remove the top cover. (See procedure 1.)

5-2 Power Transformer

Remove the four (4) screws marked [150]. The power transformer can then be removed. (Fig. 2)

5-3 SUB 1/4 Circuit Board

Remove the two (2) screws marked [125]. The SUB 1/4 circuit board can then be removed. (Fig. 2)

6. SUB 2/4 Circuit Board

(Time required: about 15 minutes)

6-1 Remove the top cover. (See procedure 1.)

6-2 Remove the power transformer. (See procedure 5-2.)

6-3 Remove the SUB 1/4 circuit board (See procedure 5-3.)

6-4 Remove the four (4) screws marked [120]. The SUB 2/4 circuit board can then be removed. (Fig. 4)

<Left Side View>

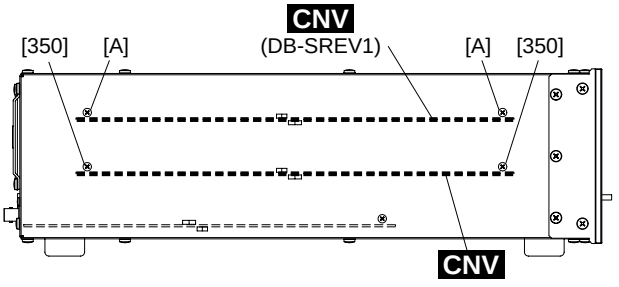

[A]: Bind Head Screw A3.0X6 MFZN2BL (VP156600)
[350]: Bind Head Screw A3.0X6 MFZN2BL (VP156600)

Fig. 3

<Top View>

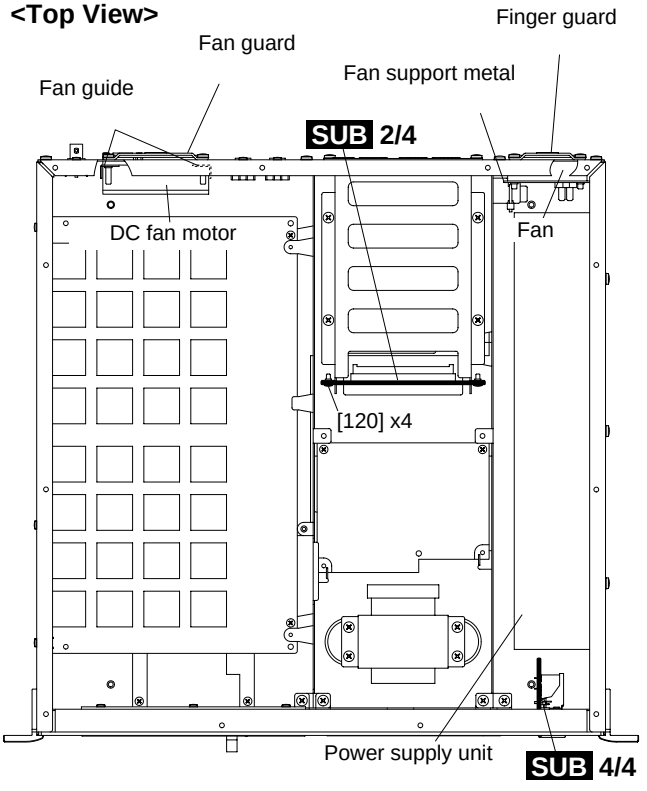

[120]: Bind Head Tapping Screw-B 3.0X8 MFZN2BL (EP600190)

Fig. 4

7. Power Supply Unit
(Time required: about 10 minutes)

7-1 Remove the top cover. (See procedure 1.)

7-2 Remove the six (6) screws marked [60]. The power supply unit can then be removed. (Fig. 4, 5)

8. Front Panel (Time required: about 10 minutes)

8-1 Remove the top cover. (See procedure 1.)

8-2 Remove the two (2) screws marked [600] and the eight (8) screws marked [610]. The left and rihgt mount brackets can then be removed. (Fig. 5)

8-3 Remove the six (6) screws marked [570] The front panel can then be removed. (Fig. 6)

<Right Side View>

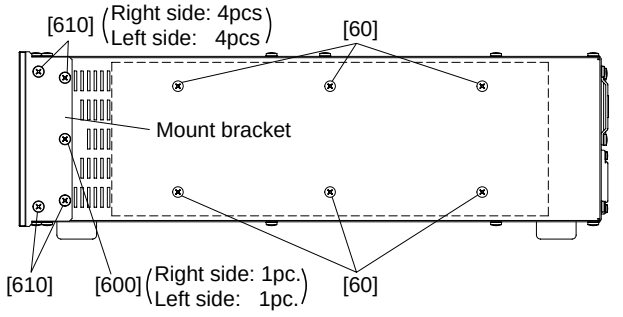

[60]: Bind Head Screw A4.0X8 MFZN2BL (VP156800)
[600]: Oval Head Screw B4.0X10 MFZN2BL (V6221000)
[610]: Oval Head Screw 4.0X8 MFZN2BL (VS153600)

Fig. 5

<Front View>

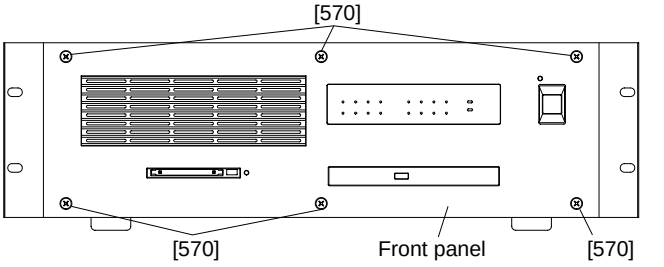

[570]: Oval Head Screw B4.0X10 MFZN2BL (V6221000)

Fig. 6

9. SUB 3/4 Circuit Board, SUB 4/4 Circuit Board
(Time required: about 15 minutes each)

9-1 Remove the top cover. (See procedure 1.)

9-2 Remove the front panel (See procedure 8.)

9-3 SUB 3/4 Circuit Board

Remove the two (2) screws for [410] and pull out the SUB 3/4 circuit board from the two of the sub-chassis. (Fig. 7)

9-4 SUB 4/4 Circuit Board

Pull out the power switch knob. (Fig. 7)

Remove the two (2) screws marked [430]. The SUB 4/4 circuit board can then be removed. (Fig. 4, 7)

10. DC Fan Motor (Time required: about 10 minutes)

10-1 Remove the top cover. (See procedure 1.)

10-2 Remove the four (4) screws marked [230]. The DC fan motor can then be removed with both the fan guard and the fan guide. (Fig. 4, 8)

11. Fan (Time required: about 10 minutes)

11-1 Remove the top cover. (See procedure 1.)

11-2 Remove the four (4) screws marked [190]. The Fan can then be removed with both the finger guard and the fan support metal. (Fig. 4, 8)

12 Bottom Cover (Time required: about 5 minutes)

12-1 Remove the twelve (12) screws marked [830]. The bottom cover can then be removed. (Fig. 9)

<Front View>

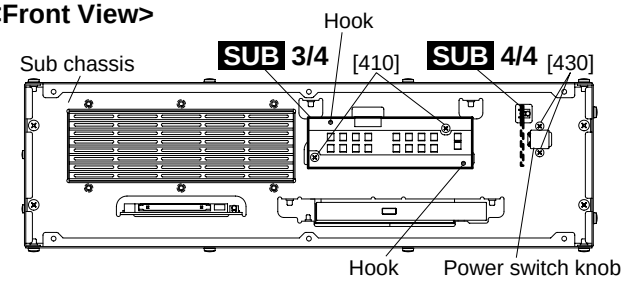

[410]: Bind Head Tapping Screw-B 3.0X8 MFZN2BL (EP600190)
[430]: Bind Head Screw A3.0X6 MFZN2BL (VP156600)

Fig. 7

<Rear View>

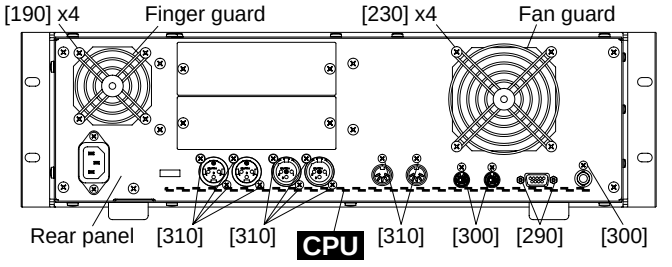

[190]: Bind Head Screw SP 4.0X25 MFZN2BL (VR116500)
[230]: Pan Head Screw SP 4.0X20 MFZN2BL (VR116500)
[300]: Bind Head Screw A3.0X6 MFZN2BL (VP156600)
[310]: Bind Head Tapping Screw-B A3.0X8 MFZN2BL (VP157000)

Fig. 8

<Bottom View>

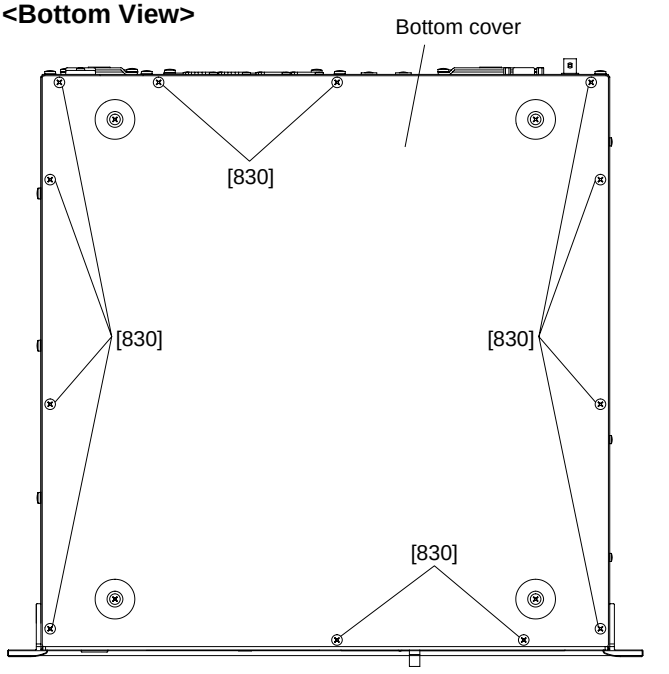

[830]: Bind Head Tapping Screw-B A4.0X8 MFZN2BL (VC688800)

Fig. 9

13 CPU Circuit Board

(Time required: about 10 minutes)

13-1 Remove the bottom cover. (See procedure 12.)

13-2 Remove the two (2) jack sockets marked [290], the three (3) screws marked [300], the ten (10) screws marked [310], the screw marked [320] and the two (2) screws marked [330]. The CPU circuit board can then be removed. (Fig. 8, 10, 11)

14 CD-ROM Circuit Board

(Time required: about 5 minutes)

14-1 Remove the bottom cover. (See procedure 12.)

14-2 Remove the CN angle bracket by removing the two (2) screws marked [520]. The CD-ROM circuit board can then be removed with pulling out the connector of the CD-ROM circuit board from the CD-ROM drive. (Fig. 10)

15 CD-ROM Drive (Time required: about 10 minutes)

15-1 Remove the bottom cover. (See procedure 12.)

15-2 Remove the CD-ROM circuit board. (See procedure 14.)

15-3 Remove the three (3) screws marked [530]. The CD-ROM drive can then be removed with the CD angle. (Fig. 10)

15-4 Remove the CD angle from the CD-ROM drive by removing the four (4) screws marked [500]. (Fig. 12)

<Bottom View>

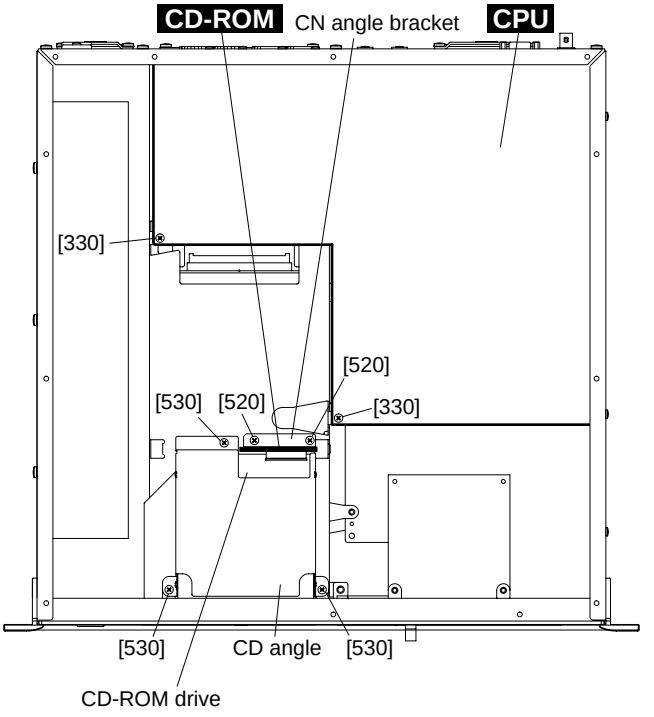

[330]: Bind Head Tapping Screw-B 3.0X8 MFZN2BL (EP600190)
[520]: Bind Head Tapping Screw-B A3.0X8 MFZN2BL (VP157000)
[530]: Bind Head Tapping Screw-B A3.0X8 MFZN2BL (VP157000)

Fig. 10

<Left Side View>

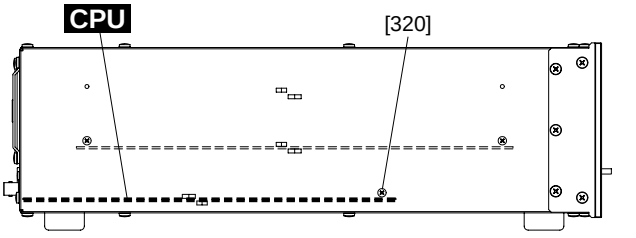

[320]: Bind Head Screw A3.0X6 MFZN2BL (VP156600)

Fig. 11

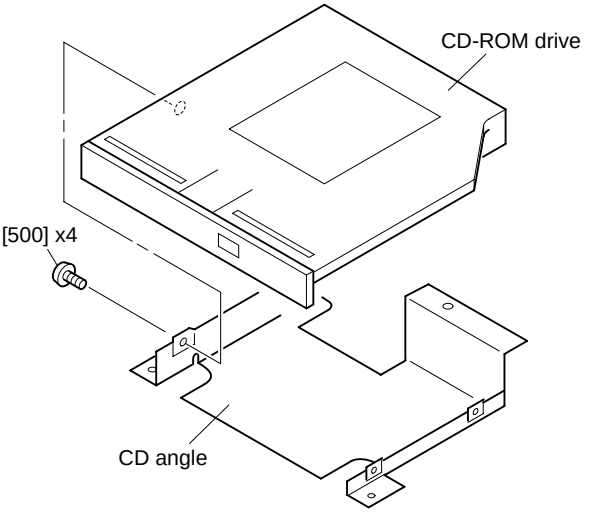

[500]: Pan Head Screw 2.0X2 MFZN2Y (V6881500)

Fig. 12

■ INSTALLING I/O CARDS

This section explains how to install mini YGDAI cards in the SREV1.

1. Turn off the SREV1.

2. Undo the two fixing screws and remove the slot cover, as shown below.

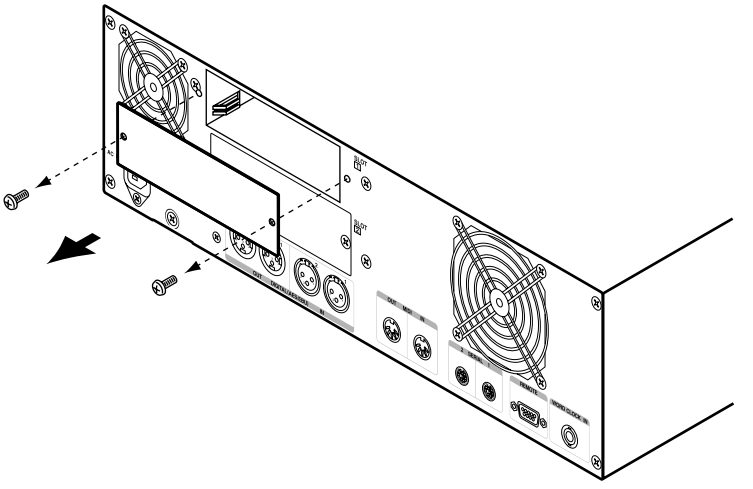

Keep the cover and fixing screws in a safe place for future use.

3. Insert the card between the guide rails and slide it all the way into the slot, as shown below. You may have to push firmly to plug the card into the SREV1 connector.

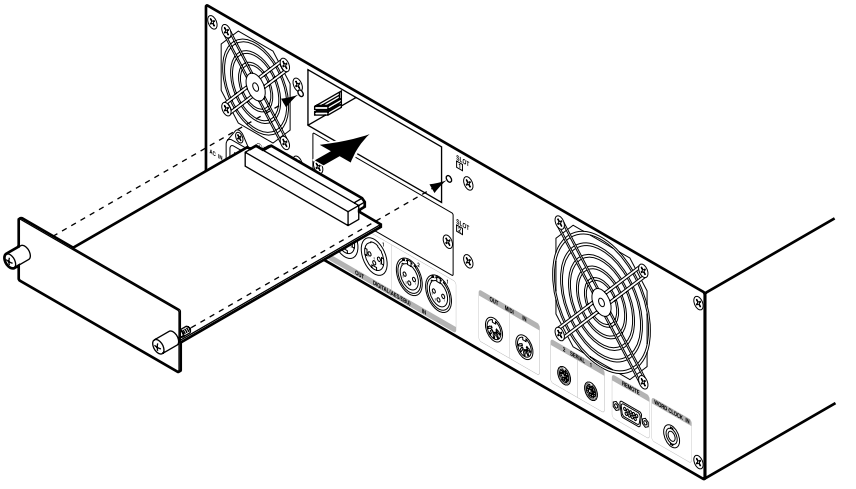

4. Secure the card using the attached thumbscrews. Do not leave the thumb-screws loose, as the card will not be grounded correctly.

■ DB-SREV1 INSTALLATION

* Before installing the DB-SREV1 (CNV) circuit board, turn off the SREV1 and disconnect the power cord.

1. Top Cover Removal

Remove the fourteen (14) screws marked [850]. The top cover can then removed. (Fig. 1)

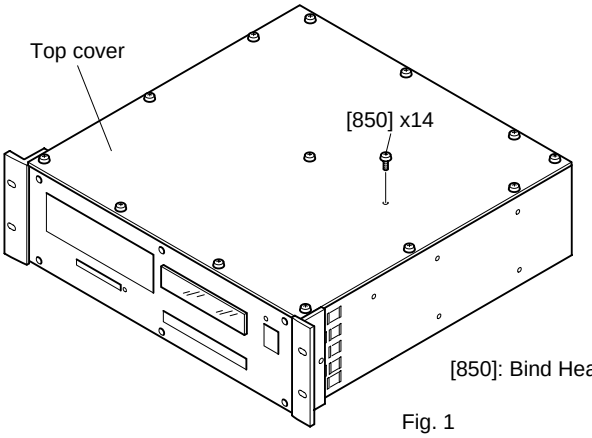

[850]: Bind Head Tapping Screw-B A4.0X8 MFZN2BL (VC688800)

Fig. 1

2. CNV Circuit Board Removal

Remove the two (2) screws marked [350] and the two (2) screws marked [360]. The CNV circuit board can then be removed. (Fig. 2, 3)

3. Cables Connection

Connect the two supplied cables to the CPU circuit board (CN118, CN119) so that the printed side appears as shown as in Figure 4, and then close the securing clips on each side of the connectors.

* The two supplied cables are identical.

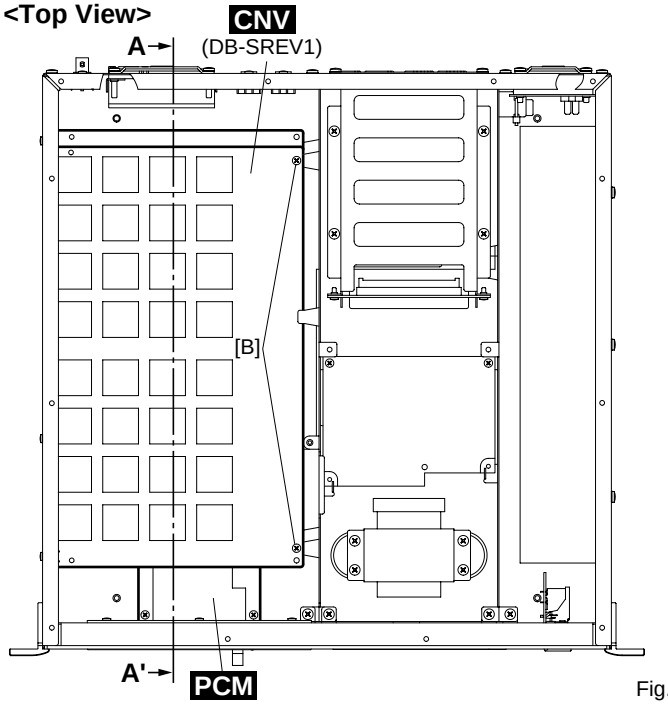

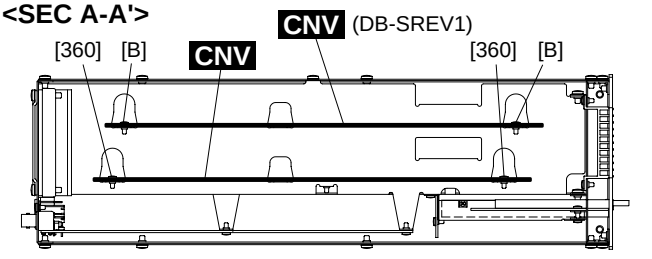

[B]: Bind Head Tapping Screw-B 3.0X8 MFZN2BL (EP600190)
[360]: Bind Head Tapping Screw-B 3.0X8 MFZN2BL (EP600190)

Fig. 2

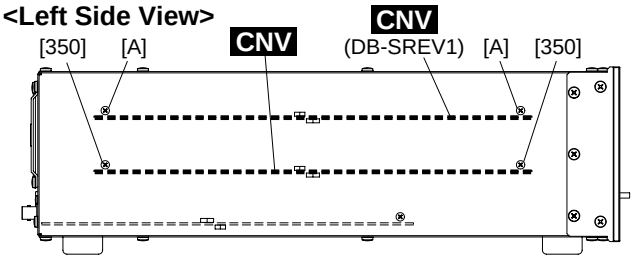

[A]: Bind Head Screw A3.0X6 MFZN2BL (VP156600)
[350]: Bind Head Screw A3.0X6 MFZN2BL (VP156600)

Fig. 3

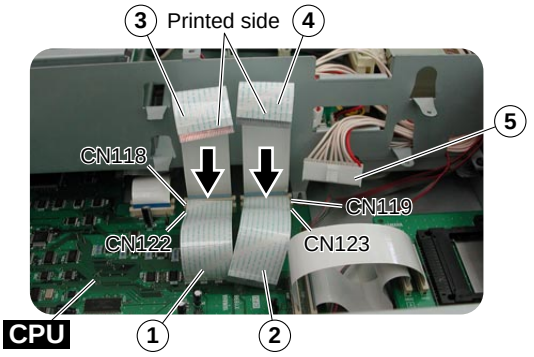

Fig. 4

4. CNV Circuit Board Installation

Reinstall the previously removed CNV circuit board, remembering to replace the two (2) internal fixing screws marked [360] and two (2) external fixing screws marked [350]. (Fig. 2, 3)

Reconnect the two cable connectors and the power supply connector. (Table 1)

5. DB-SREV1 (CNV) Circuit Board Installation

5-1 Cut and remove the cable fastener holding the power supply cable intended for the DB-SREV1(CNV) circuit board.

5-2 Install the DB-SREV1 (CNV) circuit board above the existing CNV circuit board, secure it by using two (2) internal fixing screws marked [B] and two (2) external fixing screws marked [A]. (Fig. 2, 3)

5-3 Connect the two cable connectors and the power supply connector, as shown in Figure 5. (Table 1)

• Connector Assembly

	PARTS NO	DESTINATION		REMERKS
1	MFA30100	CPU-CN122	CNV-CN2	30P/L=100mm
2	MFA30100	CPU-CN123	CNV-CN3	30P/L=100mm
3	MFA30140	CPU-CN118	DB-SREV1(CNV)-CN2	30P/L=140mm
4	MFA30140	CPU-CN119	DB-SREV1(CNV)-CN3	30P/L=140mm
5	(V6513200)	Power Supply Unit-CN3	CNV-CN1	10P
6	(V6513200)	Power Supply Unit-CN4	DB-SREV1(CNV)-CN1	10P

* Connector assembly listed above are not available as service parts except MFA30100 and MFA30140.

Table 1

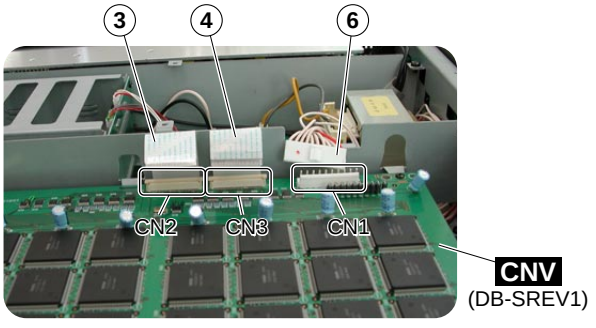

Fig. 5

6. Re-attach the SREV1 Top Cover

Replace the fourteen (14) fixing screws marked [850]. The top cover can then be Replaced. (Fig. 1)

7. Checking that the DB-SREV1 (CNV) Circuit Board is Working Correctly

If the DB-SREV1 (CNV) circuit board is working correctly, when the SREV1 is turned on the two rows of INPUT and OUTPUT front panel indicators light up alternately in a streaming pattern from left to right. If the indicators do not light up like this, the DB-SREV1 (CNV) circuit board is not working correctly, in which case you should check that it's installed in accordance with these instructions.

8. Execute Test Program

Execute test program No. 5 in Section 5-2 and check if operation is normal. (Refer to page 42.)

■ LSI PIN DESCRIPTION

● **YM3436DK** (XG948E00) **DIR2** (Digital Format Interface Receiver)

CPU: IC165

PIN NO.	NAME	I/O	FUNCTION	PIN NO.	NAME	I/O	FUNCTION
1	DAUX	I	Auxiliary input for audio data	23	RSTN	I	System reset input
2	HDLT	O	Asynchronous buffer operation flag	24	Vdda		VCO section power (+5 V)
3	DOUT	O	Audio data output	25	CTLN	I	VCO control input N
4	VFL	O	Parity flag output	26	PCO	O	PLL phase comparison output
5	OPT	O	Fs x 1 Synchronous output signal for DAC	27	(NC)		
6	SYNC	O	Fs x 1 Synchronous output signal for DSP	28	CTLP	I	VCO control input P
7	MCC	O	Fs x 64 Bit clock output	29	Vssa		VCO section power (GND)
8	WC	O	Fs x 1 Word clock output	30	TSTN	I	Test terminal. Open for normal use
9	MCB	O	Fs x 128 Bit clock output	31	KM2	I	Clock mode switching input 2
10	MCA	O	Fs x 256 Bit clock output	32	KM0	I	Clock mode switching input 0
11	SKSY	I	Clock synchronization control input	33	FS1	O	Channel status sampling frequency display output 1
12	XI	I	Crystal oscillator connection or external clock input	34	FS0	O	Channel status sampling frequency display output 0
13	XO	O	Crystal oscillator connection	35	CSM	I	Channel status output method selection
14	P256	O	VCO oscillating clock connection	36	EXTW	I	External synchronous auxiliary input word clock
15	LOCK	O	PLL lock flag	37	DDIN	I	EIAJ (AES/EBU) data input
16	Vss		Logic section power (GND)	38	LR	O	PLL word clock output
17	TC	O	PLL time constant switching output	39	Vdd		Logic section power (+5 V)
18	DIM1	I	Data input mode selection	40	ERR	O	Data error flag output
19	DIM0	I	Data input mode selection	41	EMP	O	Channel status emphasis control code output
20	DOM1	I	Data output mode selection	42	CD0	O	3-wire type microcomputer interface data output
21	DOM0	I	Data output mode selection	43	CCK	I	3-wire type microcomputer interface clock input
22	KM1	I	Clock mode switching input 1	44	CLD	I	3-wire type microcomputer interface load input

● **YM3437C-F** (XM530A00) **DIT2** (Digital Format Interface Transmitter)

CPU: IC148, 149

PIN NO.	NAME	I/O	FUNCTION	PIN NO.	NAME	I/O	FUNCTION
1	Vss		Ground	9	MUTE	I	Mute
2	MCLK	I	Master clock input	10	VFL	I	Validity flag
3	DM0	I	DIN/BCLK/WCLK format select	11	CCK/CCB	I	C,U bit clock input/C bit data input
4	DM1	I	DM1,DM0=0,0 DSP,LDSP (64 bit,LSB first) DM1,DM0=0,1stereo,DSP (64 bit,MSB first) DM1,DM0=1,0 DSP2 (128 bit,MSB first) DM1,DM0=1,1 BB (64 bit,MSB first)	12	CIN/UDB	I	C,U bit data input/U bit data input
5	RSTN	I	System reset	13	CLD/AUXTN	I	End of C,U bit input/16,20 bit/24 bit select
6	WCIN	I	Word clock input	14	CNTR/BLKIN	I	32 bit counter reset/Top of block
7	DIN	I	Digital audio serial data input	15	CSM	I	Channel status input mode select CSM=0 Asynchronous mode, CSM=1 Synchronous mode
8	V_{DD}		Power supply (+5 V)	16	DOUT	O	Digital interface formatted data output

● SH7709A FP-208C (XY065A00) CPU

CPU: IC105

PIN NO.	NAME	I/O	FUNCTION	PIN NO.	NAME	I/O	FUNCTION
1	MD1	I	Clock mode	105	CKE/PTK[5]	I/O	CK enable/Port K
2	MD2	I	Clock mode	106	RAS3L/PTJ[0]	I/O	DRAM row address strobe/Port J
3	Vcc-RTC*1	-	Power supply for RTC (1.8 V)	107	RAS2L/PTJ[1]	I/O	DRAM row address strobe/Port J
4	XTAL2	O	Crystal oscillator for RTC	108	CASLL/CASL/PTJ[2]	I/O	Column address strobe (low)/Port J
5	EXTAL2	I	Crystal oscillator for RTC	109	VssO	-	Ground
6	Vss-RTC*1	-	Ground	110	CASLH/CASU/PTJ[3]	I/O	Column address strobe (high)/Port J
7	NMI	I	Non-maskable interrupt request	111	VccO	-	Power supply (3.3 V)
8	IRO0/IRL0/PTH[0]	I	Interrupt request/Input port H	112	CASHL/PTJ[4]	I/O	HL Column address strobe/Port J
9	IRO1/IRL1/PTH[1]	I	Interrupt request/Input port H	113	CASHH/PTJ[5]	I/O	HH Column address strobe/Port J
10	IRO2/IRL2/PTH[2]	I	Interrupt request/Input port H	114	DACK0/PTD[5]	I/O	DMA acknowledge transfer strobe 0/Port D
11	IRO3/IRL3/PTH[3]	I	Interrupt request/Input port H	115	DACK1/PTD[7]	I/O	DMA acknowledge transfer strobe 1/Port D
12	IRO4/PTH[4]	I	Interrupt request/Input port H	116	CAS2L/PTE[6]	I/O	Column address strobe (low)/Port E
13	D31/PTB[7]	I/O	Data bus/Port B	117	CAS2H/PTE[3]	I/O	Column address strobe (high)/Port E
14	D30/PTB[6]	I/O	Data bus/Port B	118	RAS3U/PTE[2]	I/O	DRAM address strobe/Port E
15	D29/PTB[5]	I/O	Data bus/Port B	119	RAS2U/PTE[1]	I/O	DRAM address strobe/Port E
16	D28/PTB[4]	I/O	Data bus/Port B	120	TDO/PTE[0]	I/O	Test data output/Port E
17	D27/PYB[3]	I/O	Data bus/Port B	121	BACK	O	Bus acknowledge
18	D26/PTB[2]	I/O	Data bus/Port B	122	BREO	I	Bus request
19	VssO	-	Ground	123	WAIT	I	Hardware wait request
20	D25/PTB[1]	I/O	Data bus/Port B	124	RESETM	I	Reset
21	VccO	-	Power supply (3.3 V)	125	ADTRG/PTH[5]	I	Analog trigger/Input port H
22	D24/PTB[0]	I/O	Data bus/Port B	126	IOISI6/PTG[7]	I	Write protect/Area 6 input/Input port G
23	D23/PTA[7]	I/O	Data bus/Port A	127	ASEMD0/PTG[6]	I	ASE mode/Input port G
24	D22/PTA[6]	I/O	Data bus/Port A	128	ASEBRKAK/PTG[5]	I/O	ASE break acknowledge/Input port G
25	D21/PTA[5]	I/O	Data bus/Port A	129	PTG[4]	I	Input port G
26	D20/PTA[4]	I/O	Data bus/Port A	130	AUDATA[3]/PTG[3]	I/O	AUD data/Input port G
27	Vss	-	Ground	131	AUDATA[2]/PTG[2]	I/O	AUD data/Input port G
28	D19/PTA[3]	I/O	Data bus/Port A	132	Vss	-	Ground
29	Vcc	-	Power supply (1.8 V)	133	AUDATA[1]/PTG[1]	I/O	AUD data/Input port G
30	D18/PTA[2]	I/O	Data bus/Port A	134	Vcc	-	Power supply (1.8 V)
31	D17/PTA[1]	I/O	Data bus/Port A	135	AUDATA[0]/PTG[0]	I/O	AUD data/Input port G
32	D16/PTA[0]	I/O	Data bus/Port A	136	TRST/PTF[7]/PINT[15]	I	Test reset/Input port F/Interrupt port
33	VssO	-	Ground	137	TMS/PTF[6]/PINT[14]	I	Test mode switch/Input port F/Interrupt port
34	D15	I/O	Data bus	138	TDI/PTF[5]/PINT[13]	I	Input test data/Input port F/Interrupt port
35	VccO	-	Power supply (3.3 V)	139	TCK/PTF[4]/PINT[12]	I	Test clock/Input port F/Interrupt port
36	D14	I/O	Data bus	140	IRLS[3]/PTF[3]/PINT[11]	I	Interrupt request/Input port F/Interrupt port
37	D13	I/O	Data bus	141	IRLS[2]/PTF[2]/PINT[10]	I	Interrupt request/Input port F/Interrupt port
38	D12	I/O	Data bus	142	IRLS[1]/PTF[1]/PINT[9]	I	Interrupt request/Input port F/Interrupt port
39	D11	I/O	Data bus	143	IRLS[0]/PTF[0]/PINT[8]	I	Interrupt request/Input port F/Interrupt port
40	D10	I/O	Data bus	144	MD0	I	Clock mode
41	D9	I/O	Data bus	145	Vcc-PLL1*2	-	PLL1 Power supply (1.8 V)
42	D8	I/O	Data bus	146	CAP1	-	PLL1 capacitor
43	D7	I/O	Data bus	147	Vss-PLL1*2	-	PLL1 Ground
44	D6	I/O	Data bus	148	Vss-PLL2*2	-	PLL2 Ground
45	VssO	-	Ground	149	CAP2	-	PLL2 capacitor
46	D5	I/O	Data bus	150	Vcc-Pll2*2	-	PLL2 Power supply (1.8 V)
47	VccO	-	Power supply (3.3 V)	151	AUDCK/PTH[6]	I	AUD clock/Input port H
48	D4	I/O	Data bus	152	Vss	-	Ground
49	D3	I/O	Data bus	153	Vss	-	Ground
50	D2	I/O	Data bus	154	Vcc	-	Power supply (1.8 V)
51	D1	I/O	Data bus	155	XTAL	O	Clock oscillator
52	D0	I/O	Data bus	156	EXTAL	I	Clock/Crystal oscillator
53	A0	I	Address bus	157	STATUS0/PTJ[6]	I/O	cessor status/Port J
54	A1	I	Address bus	158	STATUS1/PTJ[7]	I/O	Pross./Port J
55	A2	I	Address bus	159	TCLK/PTH[7]	I/O	Clock/Port H
56	A3	I	Address bus	160	IROOUT	O	'Interrupt request
57	VssO	-	Ground	161	VssO	-	Ground
58	A4	I	Address bus	162	CKIO	I/O	System Clock
59	VccO	-	Power supply (3.3 V)	163	VccO	-	Power supply (3.3 V)
60	A5	I	Address bus	164	TxD0/SCPT[0]	O	Data transmission 0/Output port
61	A6	I	Address bus	165	SOK0/SCPT[1]	I/O	Serial clock/Port
62	A7	I	Address bus	166	TxD1/SCPT[2]	O	Data transmission 1/Output port
63	A8	I	Address bus	167	SCK1/SCPT[3]	I/O	Serial clock/Port
64	A9	I	Address bus	168	TxD2/SCPT[4]	O	Data transmission 2/Output port
65	A10	I	Address bus	169	SCK2/SCPT[5]	I/O	Serial clock/Port
66	A11	I	Address bus	170	RTS2/SCPT[6]	I/O	Request to send 2/Output port
67	A12	I	Address bus	171	RxD0/SCPT[0]	I	Data reception 0/Output port
68	A13	I	Address bus	172	RxD1/SCPT[2]	I	Data reception 1/Output port
69	VssO	-	Ground	173	Vss	-	Ground
70	A14	I	Address bus	174	RxD2/SCPT[4]	I	Data reception 2/Output port
71	VccO	-	Power supply (3.3 V)	175	Vcc	-	Power supply (1.8 V)
72	A15	I	Address bus	176	CTS2/IRO5/SCP[7]	I	Clear to send 2/Interrupt request/Input port
73	A16	I	Address bus	177	MCS[7]/PTC[7]/PINT[7]	I/O	Mask chip select/Port C/Interrupt port
74	A17	I	Address bus	178	MCS[6]/PTC[6]/PINT[6]	I/O	Mask chip select/Port C/Interrupt port
75	A18	I	Address bus	179	MCS[5]/PTC[5]/PINT[5]	I/O	Mask chip select/Port C/Interrupt port
76	A19	I	Address bus	180	MCS[4]/PTC[4]/PINT[4]	I/O	Mask chip select/Port C/Interrupt port
77	A20	I	Address bus	181	VssO	-	Ground
78	A21	I	Address bus	182	WAKEUP/PTD[3]	I/O	Standby mode/Port D
79	Vss	-	Ground	183	VccO	-	Power supply (3.3 V)
80	A22	I	Address bus	184	RESETOUT/PTD[2]	I/O	Reset output/Port D
81	Vcc	-	Power supply (1.8 V)	185	MCS[3]/PTC[3]/PINT[3]	I/O	Mask chip select/Port C/Interrupt port
82	A23	I	Address bus	186	MCS[2]/PTC[2]/PINT[2]	I/O	Mask chip select/Port C/Interrupt port
83	VssO	-	Ground	187	MCS[1]/PTC[1]/PINT[1]	I/O	Mask chip select/Port C/Interrupt port
84	A24	I	Address bus	188	MCS[0]/PTC[0]/PINT[0]	I/O	Mask chip select/Port C/Interrupt port
85	VccO	-	Power supply (3.3 V)	189	DRAK0/PTD[1]	I/O	DMA transfer request/IPort D
86	A25	I	Address bus	190	DRAK1/PTD[0]	I/O	DMA transfer request/IPort D
87	BS/PTK[4]	I/O	Bus cycle signal start/Port K	191	DREQ0/PTD[4]	I	DMA transfer request/Input port D
88	RD	O	Read strobe	192	DREQ1/PTD[6]	I	DMA transfer request/Input port D
89	WE0/DOMLL	O	D7-D0 select sugnal/DOM (SDRAM)	193	RESETP	I	Power on reset
90	WE1/DOMLU/WE	O	D15-D8 select signal/DOM (SDRAM)	194	CA	I	Chip active/Hardware stand by request
91	WE2/DOMUL/ICIORD/PTK[6]	I/O	D23-D16 select signal/DOM (SDRAM)/PCMCIA I/O read/Port K	195	MD3	I	Area 0 bus allocation
92	WE3/DOMUU/ICIOW/RPTK[7]	I/O	D31-D24 select signal/DOM (SDRAM)/PCMCIA I/O write/Port K	196	MD4	I	Area 0 bus allocation
93	RD/WR	O	Read/Write	197	MD5	I	Area 0 bus allocation
94	AUDSYNC/PTE[7]	I/O	AUD sync. signal/Port E	198	AVss	-	Ground
95	VssO	-	Ground	199	AN[0]/PTL[0]	I	AD converter input/Input port L
96	CS0/MCS[0]	O	Chip select/Mask ROM chip select	200	AN[1]/PTL[1]	I	AD converter input/Input port L
97	VccO	-	Power supply (3.3 V)	201	AN[2]/PTL[2]	I	AD converter input/Input port L
98	CS2/PTK[0]	I/O	Chip select2/Port K	202	AN[3]/PTL[3]	I	AD converter input/Input port L
99	CS3/PTK[1]	I/O	Chip select3/Port K	203	AN[4]/PTL[4]	I	AD converter input/Input port L
100	CS4/PTK[2]	I/O	Chip select4/Port K	204	AN[5]/PTL[5]	I	AD converter input/Input port L
101	CS5/CE1A/PTK[3]	I/O	Chip select5/CE1/Port K	205	AVcc (3.3 V)	-	Analog Power supply (3.3 V)
102	CS6/CE1B	I/O	Chip select6/CE1	206	AN[6]/DA[1]/PTL[6]	I	AD converter input/Input port L
103	CE2A/PTE[4]	I/O	Card enable/Port E	207	AN[7]/DA[0]/PTL[7]	I	AD converter input/Input port L
104	CE2B/PTE[5]	I/O	Card enable/Port E	208	AVss	-	Ground

● **YSS910-S** (XV988A00) **DSP6** (Digital Signal Processor)

CPU: IC143, 159

PIN NO.	NAME	I/O	FUNCTION	PIN NO.	NAME	I/O	FUNCTION
1	Vdd		Power supply (3.3 V)	89	Vss		Ground
2	Vss		Ground	90	DB13	I/O	Parallel data bus
3	XI	I	System master clock input (60 MHz or 30 MHz)	91	DB14	I/O	
4	XO	O	System master clock output (High or 30 MHz)	92	DB15	I/O	
5	Vdd		Power supply (5 V)	93	DB16	I/O	
6	/SYNCI	I	Sync. signal input	94	DB17	I/O	
7	/SYNCO	O	Sync. signal output	95	DB18	I/O	
8	Vdd		Power supply (5 V)	96	DB19	I/O	
9	CKI	I	System clock input (30 MHz)	97	DB20	I/O	
10	CKO	O	System clock output (30 MHz)	98	DB21	I/O	
11	CKSEL	I	System master clock select (0: 60 MHz, 1: 30 MHz)	99	DB22	I/O	
12	Vss		Ground	100	Vss		Ground
13	MCKS	I	Serial I/O master clock input (128 x Fs)	101	Vdd		Power supply (3.3 V)
14	/SSYNC	I	Serial I/O Sync. signal output	102	DB23	I/O	Parallel data bus
15	/IC	I	Initial clear	103	DB24	I/O	
16	/TEST	I	Test mode setting (0: Test, 1: Normal)	104	DB25	I/O	
17	BTYP	I	Data bus type select (0: 8 bit, 1: 16 bit)	105	DB26	I/O	
18	/IRQ	O	IRQ output	106	DB27	I/O	
19	TRIG	I/O	Trigger signal input/output	107	DB28	I/O	
20	Vdd		Power supply (5 V)	108	DB29	I/O	
21	Vss		Ground	109	DB30	I/O	
22	/CS	I	chip select signal input	110	DB31	I/O	
23	/WR	I	Write signal input	111	TIMO//DBOE	I/O	Timing signal output/ Parallel data bus output/ input
24	/RD	I	Read signal input	112	Vss		Ground
25	CA7	I/O	Address bus of internal register	113	Vdd		Power supply (5 V)
26	CA6	I/O		114	DA00	I/O	Memory data bus
27	CA5	I/O		115	DA01	I/O	
28	CA4	I/O		116	DA02	I/O	
29	CA3	I/O		117	DA03	I/O	
30	CA2	I/O		118	DA04	I/O	
31	CA1	I/O		119	DA05	I/O	
32	Vss		Ground	120	DA06	I/O	
33	Vdd		Power supply (3.3 V)	121	DA07	I/O	
34	CD15	I/O	Data bus of internal register	122	Vss		Ground
35	CD14	I/O		123	DA08	I/O	Memory data bus
36	CD13	I/O		124	DA09	I/O	
37	CD12	I/O		125	DA10	I/O	
38	CD11	I/O		126	DA11	I/O	
39	CD10	I/O		127	DA12	I/O	
40	CD09	I/O		128	DA13	I/O	
41	CD08	I/O		129	DA14	I/O	
42	CD07	I/O		130	DA15	I/O	
43	CD06	I/O		131	Vss		Ground
44	Vss		Ground	132	Vdd		Power supply (3.3 V)
45	Vdd		Power supply (3.3 V)	133	(n.c)		Not used
46	Vdd		Power supply (5 V)	134	Vdd		Power supply (5 V)
47	CD05	I/O	Data bus of internal register	135	DA16	I/O	Memory data bus
48	CD04	I/O		136	DA17	I/O	
49	CD03	I/O		137	DA18	I/O	
50	CD02	I/O		138	DA19	I/O	
51	CD01	I/O		139	DA20	I/O	
52	CD00	I/O		140	DA21	I/O	
53	/WAIT	O	WAIT output	141	DA22	I/O	
54	Vss		Ground	142	DA23	I/O	
55	SI0	I	Serial data input	143	Vss		Ground
56	SI1	I		144	DA24	I/O	Memory data bus
57	SI2	I		145	DA25	I/O	
58	SI3	I		146	DA26	I/O	
59	SI4	I		147	DA27	I/O	
60	SI5	I		148	DA28	I/O	
61	SI6	I		149	DA29	I/O	
62	SI7	I		150	DA30	I/O	
63	Vss		Ground	151	DA31	I/O	
64	Vdd		Power supply (5 V)	152	Vdd		Power supply (5 V)
65	SO0	O	Serial data output	153	Vss		Ground
66	SO1	O		154	A00	O	Memory address (SRAM, PSRAM, DRAM)
67	SO2	O		155	A01	O	
68	SO3	O		156	A02	O	
69	SO4	O		157	A03	O	
70	SO5	O		158	A04	O	
71	SO6	O		159	A05	O	
72	SO7	O		160	A06	O	
73	Vss		Ground	161	A07	O	
74	DB00	I/O	Parallel data bus	162	A08	O	
75	DB01	I/O		163	A09	O	
76	DB02	I/O		164	Vss		Ground
77	DB03	I/O		165	Vdd		Power supply (3.3 V)
78	DB04	I/O		166	A10	O	Memory address (SRAM, PSRAM, DRAM)
79	DB05	I/O		167	A11	O	
80	DB06	I/O		168	A12	O	Memory address (SRAM, PSRAM)
81	DB07	I/O		169	A13	O	
82	DB08	I/O		170	A14	O	
83	DB09	I/O		171	A15/RAS	O	Memory address (SRAM, PSRAM), /RAS (DRAM)
84	DB10	I/O		172	A16/CAS	O	Memory address (SRAM, PSRAM), /CAS (DRAM)
85	DB11	I/O		173	A17/CE	O	Memory address (SRAM), /CE (PSRAM)
86	DB12	I/O		174	/WE	O	Memory write enable signal
87	Vdd		Power supply (5 V)	175	/OE	O	Memory output enable signal
88	Vdd		Power supply (3.3 V)	176	Vdd		Power supply (5 V)

● **YSS916-H** (XW867A00) **CNV3 DSP** (Convolver)

CNV: IC1–16, 35–50

PIN NO.	NAME	I/O	FUNCTION	PIN NO.	NAME	I/O	FUNCTION
1	VSS		Ground (GND)	65	VSS		Ground (GND)
2	VDD33		Power supply (+3.3 V)	66	VDD33		Power supply (+3.3 V)
3	CSN	I	Chip select	67	VDD25		Power supply (+2.5 V)
4	WRN	I	Write	68	SCLK	I	System clock
5	RDN	I	Read	69	RSTN	I	Reset
6	WAITN	O	Wait	70	OVFN	O	Overflow flag
7	A4	I	Address bus	71	TXFN	O	Coefficient tactor write interdiction flag
8	A3	I		72	VSS		Ground (GND)
9	A2	I		73	BCLK	I	Bit clock
10	A1	I		74	WCLK	I	Word clock
11	DACKN	I	DMA strobe	75	WSEL0	I	Serial data format
12	DREQN	O	DMA request	76	WSEL1	I	
13	VSS		Ground (GND)	77	FSSEL	I	Fs select
14	VDD33		Power supply (+3.3 V)	78	BUSWD	I	DMA data bus (24/16 bit) switch
15	VDD25		Power supply (+2.5 V)	79	BUSW	I	data bus (32/16bit) switch
16	D00	I/O	Data bus	80	TST	I	Test pin
17	D01	I/O		81	VSS		Ground (GND)
18	D02	I/O		82	VDD33		Power supply (+3.3 V)
19	D03	I/O		83	TST00	O	Test output
20	D04	I/O		84	TST01	O	
21	D05	I/O		85	TST02	O	
22	D06	I/O		86	TST03	O	
23	D07	I/O		87	TST04	O	
24	VSS		Ground (GND)	88	TST05	O	
25	D08	I/O	Data bus	89	TST06	O	
26	D09	I/O		90	TST07	O	
27	D10	I/O		91	TST08	O	
28	D11	I/O		92	TST09	O	
29	D12	I/O		93	VSS		Ground (GND)
30	D13	I/O		94	VDD25		Power supply (+2.5 V)
31	D14	I/O		95	MI1	I	Mixing input
32	D15	I/O		96	MI0	I	
33	VSS		Ground (GND)	97	SI1	I	Serial data input
34	VDD33		Power supply (+3.3 V)	98	SI0	I	
35	VDD25		Power supply (+2.5 V)	99	DO1	O	Data output
36	D16	I/O	Data bus	100	DO0	O	
37	D17	I/O		101	VSS		Ground (GND)
38	D18	I/O		102	VDD33		Power supply (+3.3 V)
39	D19	I/O		103	VDD25		Power supply (+2.5 V)
40	D20	I/O	Data bus	104	TST10	O	Test output
41	D21	I/O		105	TST11	O	
42	D22	I/O		106	TST12	O	
43	D23	I/O		107	TST13	O	
44	VSS		Ground (GND)	108	TST14	O	
45	D24	I/O	Data bus	109	TST15	O	
46	D25	I/O		110	TST16	O	
47	D26	I/O		111	TST17	O	
48	D27	I/O		112	TST18	O	
49	D28	I/O		113	TST19	O	
50	D29	I/O		114	TST20	O	
51	D30	I/O		115	VSS		Ground (GND)
52	D31	I/O		116	VDD33		Power supply (+3.3 V)
53	VSS		Ground (GND)	117	VDD25		Power supply (+2.5 V)
54	VDD33		Power supply (+3.3 V)	118	TST21	O	Test output
55	VDD25		Power supply (+2.5 V)	119	TST22	O	
56	n.c		Not used	120	TST23	O	
57	n.c			121	TST24	O	
58	n.c			122	TST25	O	
59	n.c			123	TST26	O	
60	n.c			124	TST27	O	
61	DI0	I	Data input	125	TST28	O	
62	DI1	I		126	TST29	O	
63	SO0	O	Serial data output	127	TST30	O	
64	SO1	O		128	TST31	O	

• **MBCG46183-129** (XV833A00) **Gate Array**

CPU: IC114

PIN NO.	NAME	I/O	FUNCTION	PIN NO.	NAME	I/O	FUNCTION
1	D5	I/O	Data Bus	25	TX31	O	Transmit Data 31
2	D6	I/O		26	RX32	I	Receive Data 32
3	D7	I/O		27	TX32	O	Transmit Data 32
4	/IRQ0	I/O	Interrupt Request Port 0	28	RX33	I	Receive Data 33
5	/IRQ1	I/O	Interrupt Request Port 1	29	TX33	I/O	Transmit Data 33
6	Vss		Ground	30	/IC	I	Initial Clear
7	/IRQ2	I/O	Interrupt Request Port 2	31	Vss		Ground
8	IRQ3	I/O	Interrupt Request Port 3	32	XI	I	Quartz Crystal Input
9	/RD	I	Read Signal Input	33	Vss		Ground
10	/WR	I	Write Signal Input	34	XO	I/O	Quartz Crystal Onput
11	/CE	I	Chip Enable Input	35	A0	I	Address Bus
12	/ASTB	I	Address Strobe (Not used: to ground)	36	A1	I	
13	TESTSIO	I	Input with Pull-down Resistor (50 k)	37	A2	I	
14	RX0	I	Receive Data 0	38	A3	I	
15	TX0	O	Transmit Data 0	39	A4	I	
16	RX1	I	Receive Data 1	40	A5	I	
17	TX1	O	Transmit Data 1	41	CPUCLK	I	CPU Clock
18	Vss		Ground	42	Vss		Ground
19	VDD		Power Supply	43	VDD		Power Supply
20	RX2	I	Receive Data 2	44	D0	I/O	Data Bus
21	TX2/BO2	O	Transmit Data 2	45	D1	I/O	
22	RX30	I	Receive Data 30	46	D2	I/O	
23	TX30	O	Transmit Data 30	47	D3	I/O	
24	TX31	I	Receive Data 31	48	D4	I/O	

• **YSD917-ME2** (XW526A00) **DIR5** (Digital Format Interface Receiver)

CPU: IC150, 151

PIN NO.	NAME	I/O	FUNCTION	PIN NO.	NAME	I/O	FUNCTION
1	AVDD	-	PLL analog power supply (+5 V)	15	SDWCK	I/O	Serial data I/0 word clock (Fs)
2	PCO		PLL phase comparison output	16	SDMCK	O	Master clocl for serial output (256 or 128 x Fs)
3	AVSS	-	Analog ground	17	VSS	-	Ground
4	M/S		Master/Slave mode select	18	SYNC/U	O	Synch. signal for serial output/U bit data output
5	DDIN		Didital audio interface data input	19	FS128/C	O	Serial data master clocl output (128 fs)/C bit data output
6	TEST		Test pin, not used	20	DBL/V	O	Double rate lock output/Validity flag output
7	/IC		Initial clear	21	ERR/BS	O	Data error flag output/Block start
8	VSS	-	Ground	22	/LOCK	O	PLL lock flag
9	XO	O	Crystal osc. output (24.576 MHz)	23	INT	O	Interrupt output
10	XI	I	Crystal osc. input (24.576 MHz)	24	VDD	-	Power supply (+5 V)
11	MCK	O	System clock output (12.288 MHz)	25	/CS	I	Chip select
12	VDD	-	Power supply (+5 V)	26	SO		Data output
13	SDO	O	Serial data output	27	SI	I	Data input
14	SDBCK		Serial data I/O bit clock (64 fs)	28	SCK		Bit clock input

■ IC BLOCK DIAGRAM

- **TC74VHC04F EL** (XM332A00)
  TC74VHCT04AF (XT777A00)
  Hex Inverter
  CPU: IC117, 133

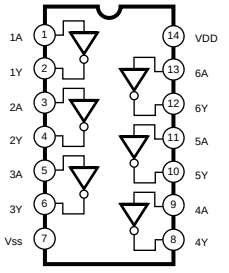

- **TC74VHC08FT** (XV891A00)
  Quad 2 Input AND
  CPU: IC301

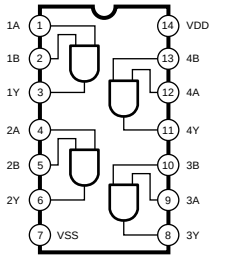

- **TC74VHC32FT** (XY945A00)
  Quad 2 Input OR
  CPU: IC121, 158

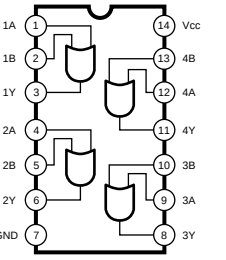

- **TC74VHC74FT** (XV892A00)
  Dual D-Type Flip-Flop
  CPU: IC139

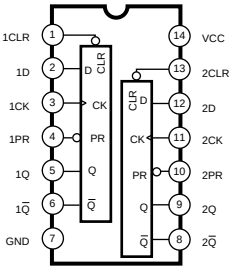

INPUTS				OUTPUTS	
PR	CLR	CLK	D	Q	Q
L	H	X	X	H	L
H	L	X	X	L	H
L	L	X	X	H	H
H	H	f	H	H	L
H	H	f	L	L	H
H	H	L	X	Q ₀	Q ₀

- **TC74VHC125FT** (XY074A00)
  Quad 3-State Bus Buffer
  CPU: IC146

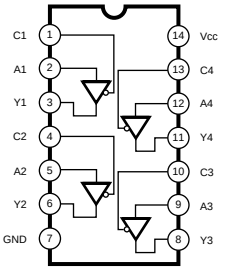

- **TC74VHCT126AFT** (XY057A00)
  Bus Buffer
  CPU: IC145

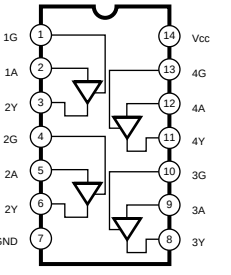

- **TC74VHC138FT** (XZ495A00)
  3 to 8 Demultiplexer
  CNV: IC19–22

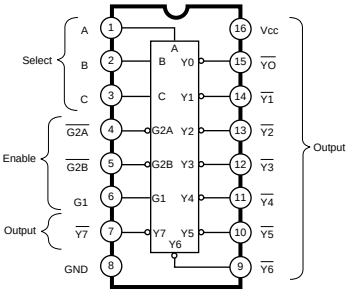

- **TC74VHC139FT** (XV893A00)
  Dual 2 to 4 Demultiplexer
  CPU: IC157, 169, 171
  CNV: IC18

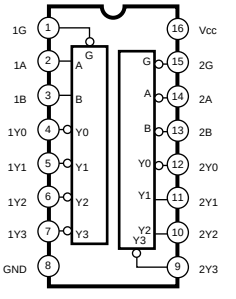

- **TC74ACT174F** (XY938A00)
  Hex D-Type Flip-Flop
  CPU: IC163, 164

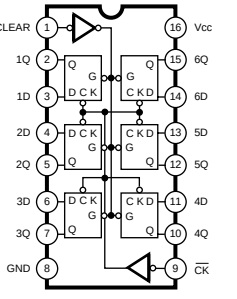

- **TC74VHCT245AFT** (XT744A00)
  TC74VHC245FT (XU797A00)
  Octal 3-State Bus Transceiver
  CPU: IC119, 120, 123, 155, 165–168, 170
  172–174, 179–184
  CNV: IC23–34

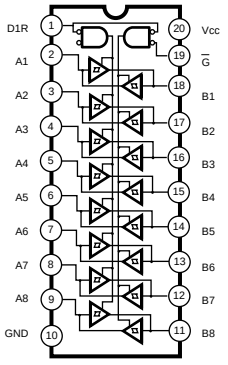

- **TC74HC251AF** (XQ968A00)
  3-State 8 to 1 Data Selector
  CPU: IC160

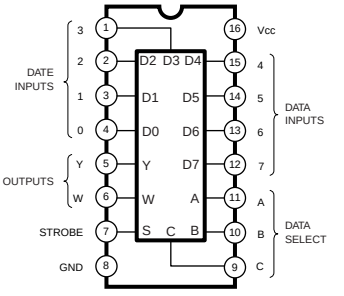

- **HD74LV393AFPEL** (IS039300)
  Dual 4-Bit Binary Counter
  CPU: IC302

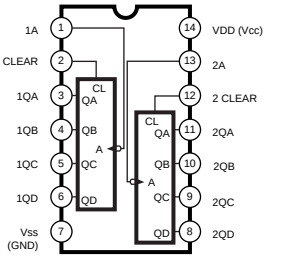

- **HD74LVC540AT** (XZ512A00)
  Bus Buffer
  CNV: IC17

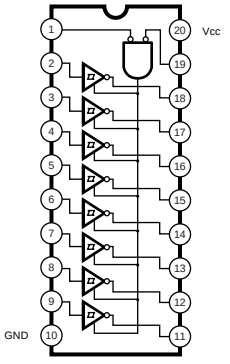

- **TC74VHCT574AFT** (XY059A00)
  Octal D-Type Flip-Flop
  CPU: IC161, 162

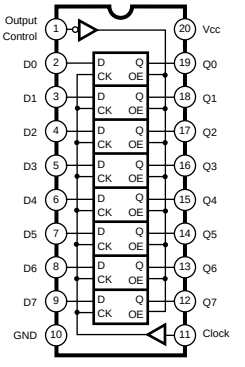

- **SN75124N** (XE737A00)
  Line Receiver
  CPU: IC144

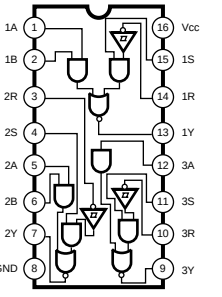

- **SN75C1168NSR** (XU073A00)
  Line Driver/Receiver
  CPU: IC125, 142

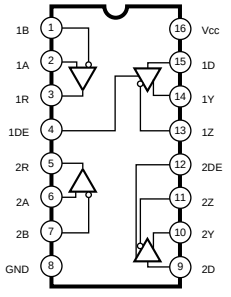

- **TC74LVXC3245FS** (XY907A00)
  Dual Supply Octal Bus Transceiver
  CPU: IC127–131

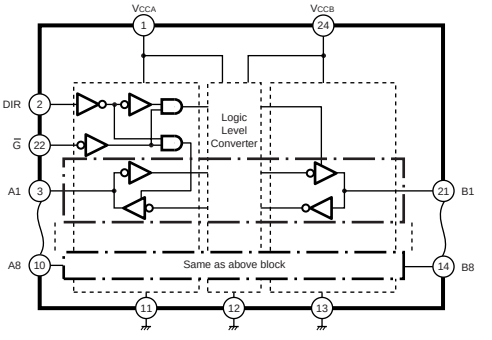

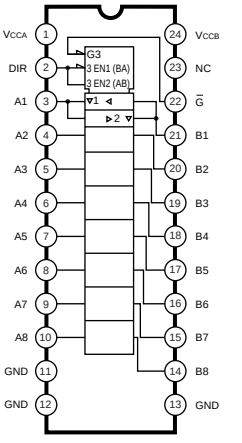

(TOP VIEW)

INPUTS		OUTPUTS	FUNCTION	
G	DIR		A-BUS	B-BUS
L	L	A=B	OUTPUT	INPUT
L	H	B=A	INPUT	OUTPUT
H	X	Z	High Impedance	

X : Don't Care
Z : High Impedance

- **TC74LVX4245FS** (XU229A00)
  Dual Supply Octal Bus Transceiver
  CPU: IC137, 138, 175–178

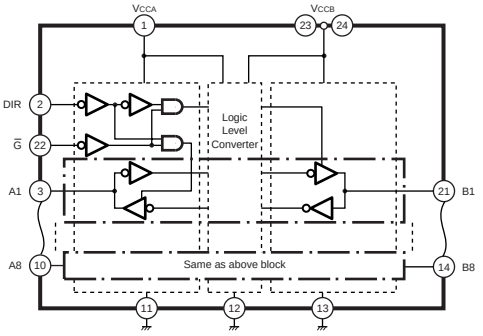

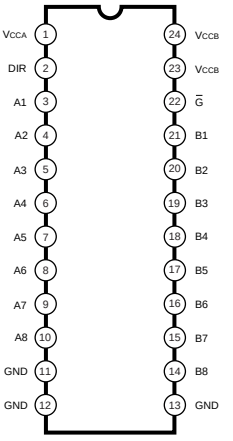

(TOP VIEW)

INPUTS		OUTPUTS	FUNCTION	
$\overline{G}$	DIR		A-BUS	B-BUS
L	L	A=B	OUTPUT	INPUT
L	H	B=A	INPUT	OUTPUT
H	X	Z	High Impedance	

X : Don't Care
Z : High Impedance

- **TC7S04F** (XM182A00)
  Inverter Gate
  CPU: IC135

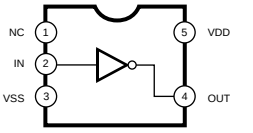

- **TC7W04FU** (XP004A00)
  Triple Inverter
  CPU: IC152

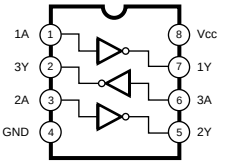

- **TC7S32FU** (XP351A00)
  OR
  CPU: IC136, 147

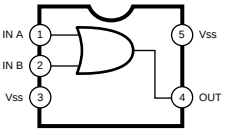

- **DS26C32ATMX** (XU815A00)
  Quad Differential Line Receiver
  CPU: IC124

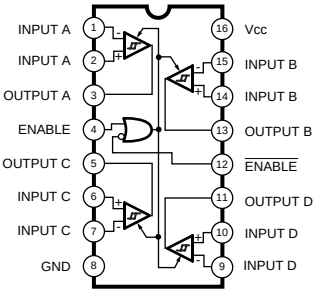

- **MC26LS30DR2** (XL334A00)
  Line Driver
  CPU: IC126

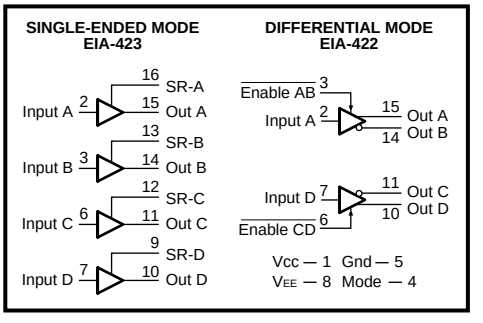

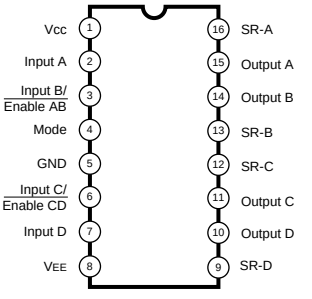

Operation	Vcc	VEE	Inputs Mode	A	B	C	D	Outputs A	B	C	D
Differential (EIA-422-A)	+5.0	GND	0	0	0	0	0	0	1	1	0
			0	1	0	0	1	1	0	0	1
			0	X	1	0	1	Z	Z	0	1
			0	1	0	0	0	1	0	1	0
			0	0	0	0	1	0	1	0	1
			0	1	0	1	X	1	0	Z	Z
Single-Ended (EIA-423-A)	+5.0	-5.0	1	0	0	0	0	0	0	0	0
			1	1	0	0	0	1	0	0	0
			1	0	1	0	0	0	1	0	0
			1	0	0	1	0	0	0	1	0
			1	0	0	0	1	0	0	0	1
X	0	X	X	X	X	X	X	Z	Z	Z	Z

X = Don't Care
Z = High Impedance (Off)

- **CY2305** (XY937A00)
  Clock Buffer
  CPU: IC110

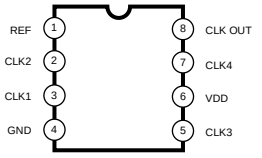

- **TPS2211IDBR** (XY906A00)
  PCMCIA Power Interface Switch
  CPU: IC132

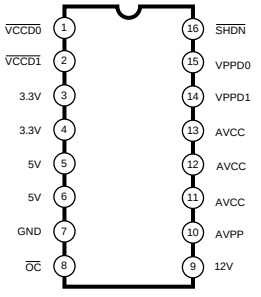

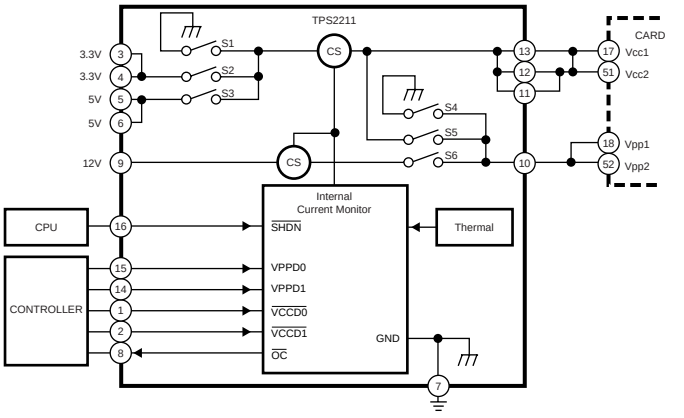

■ CIRCUIT BOARDS CONTENTS

Note: See parts list for details of circuit board component parts.

■ CIRCUIT BOARDS

● CNV Circuit Board

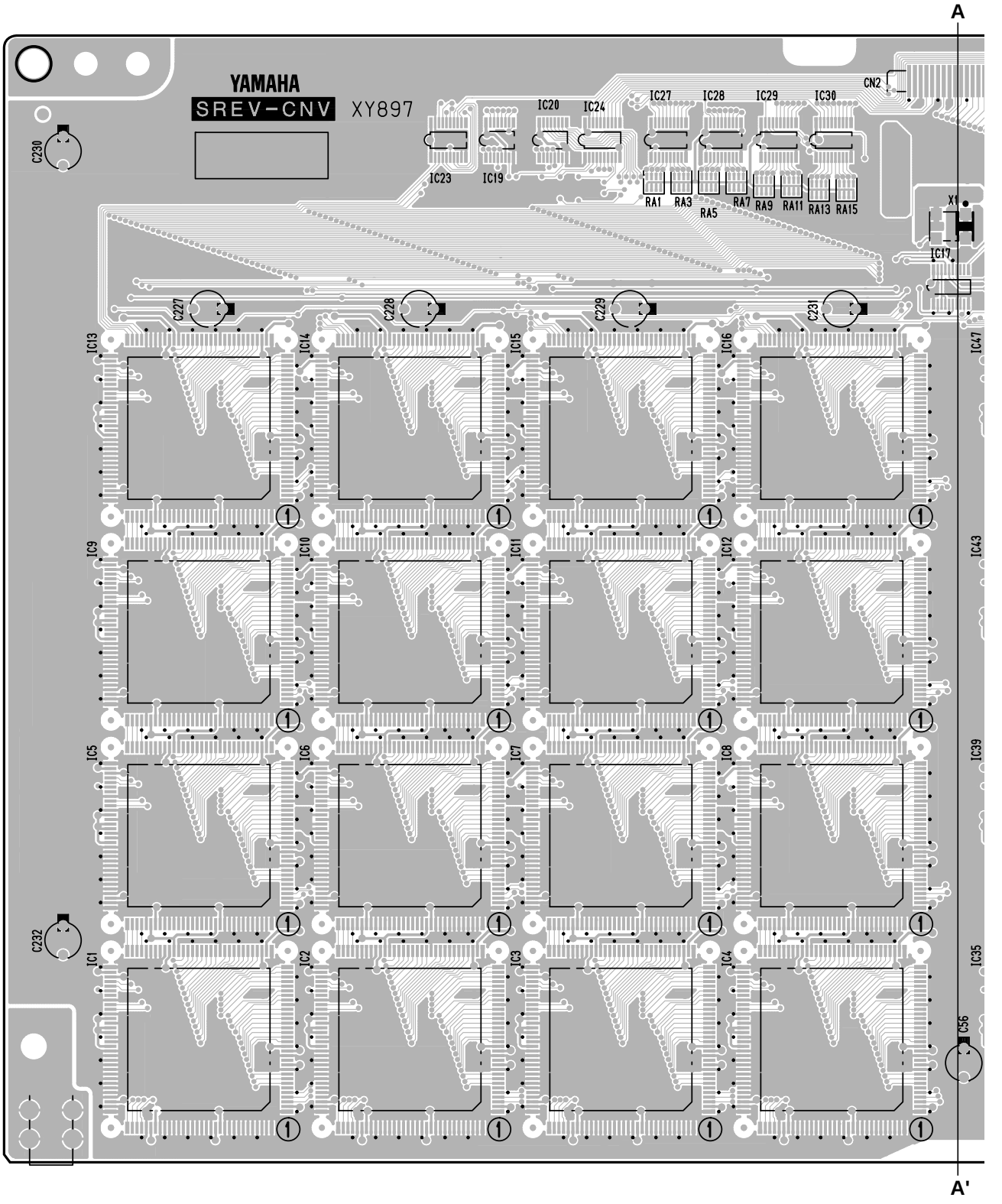

3NA-V587900⚠1

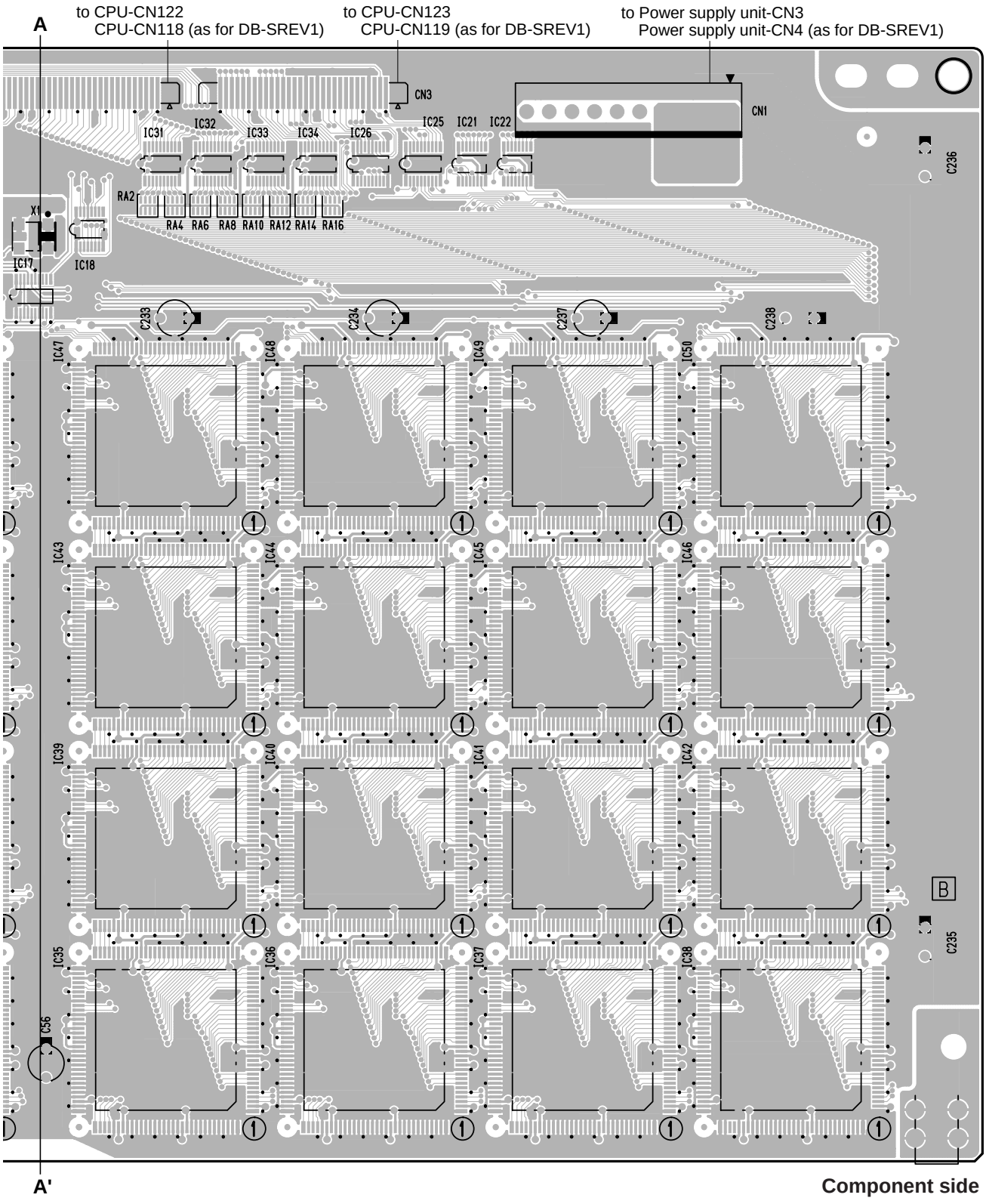

Component side

3NA-V587900⚠1

● CNV Circuit Board

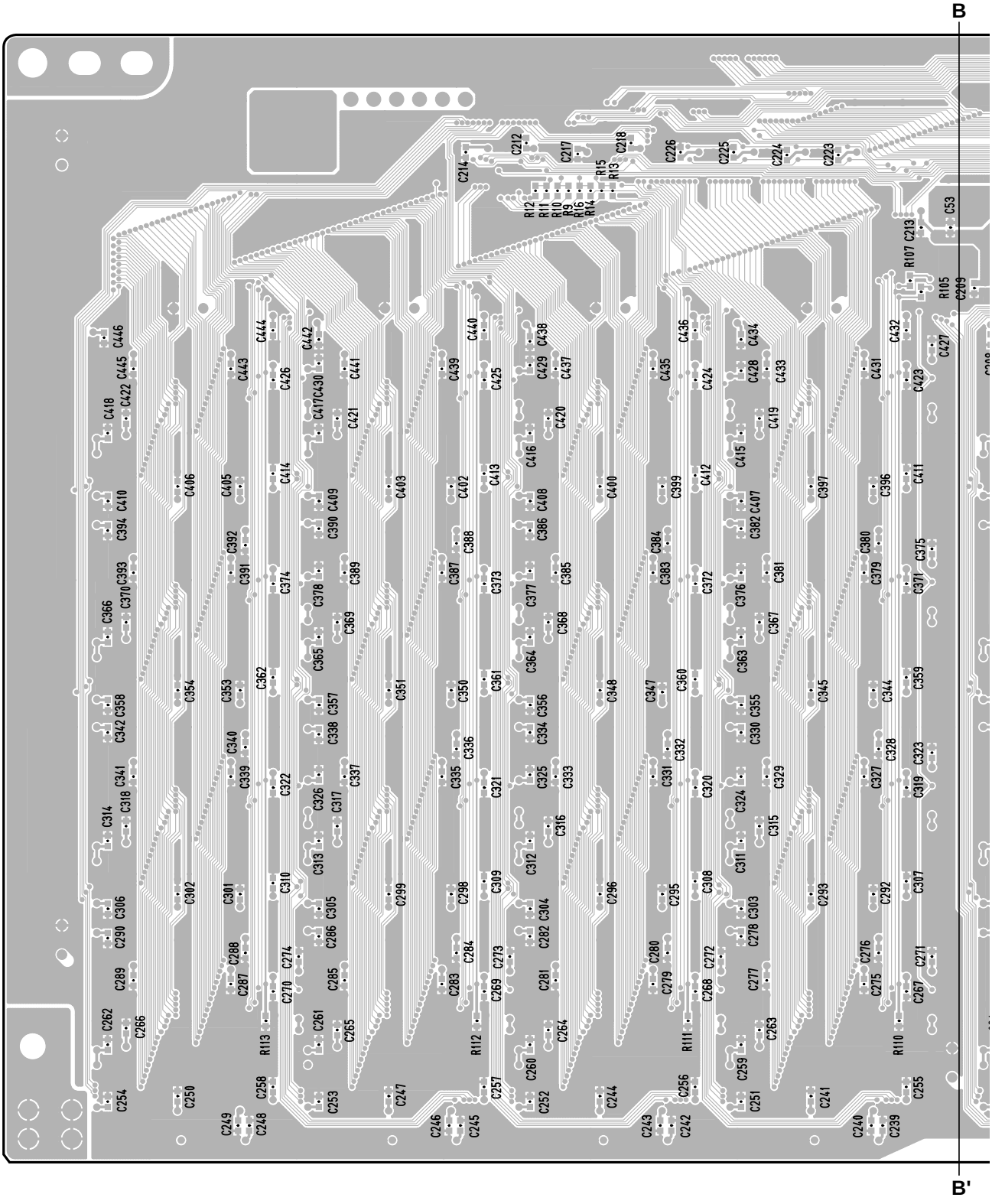

3NA-V587900⚠

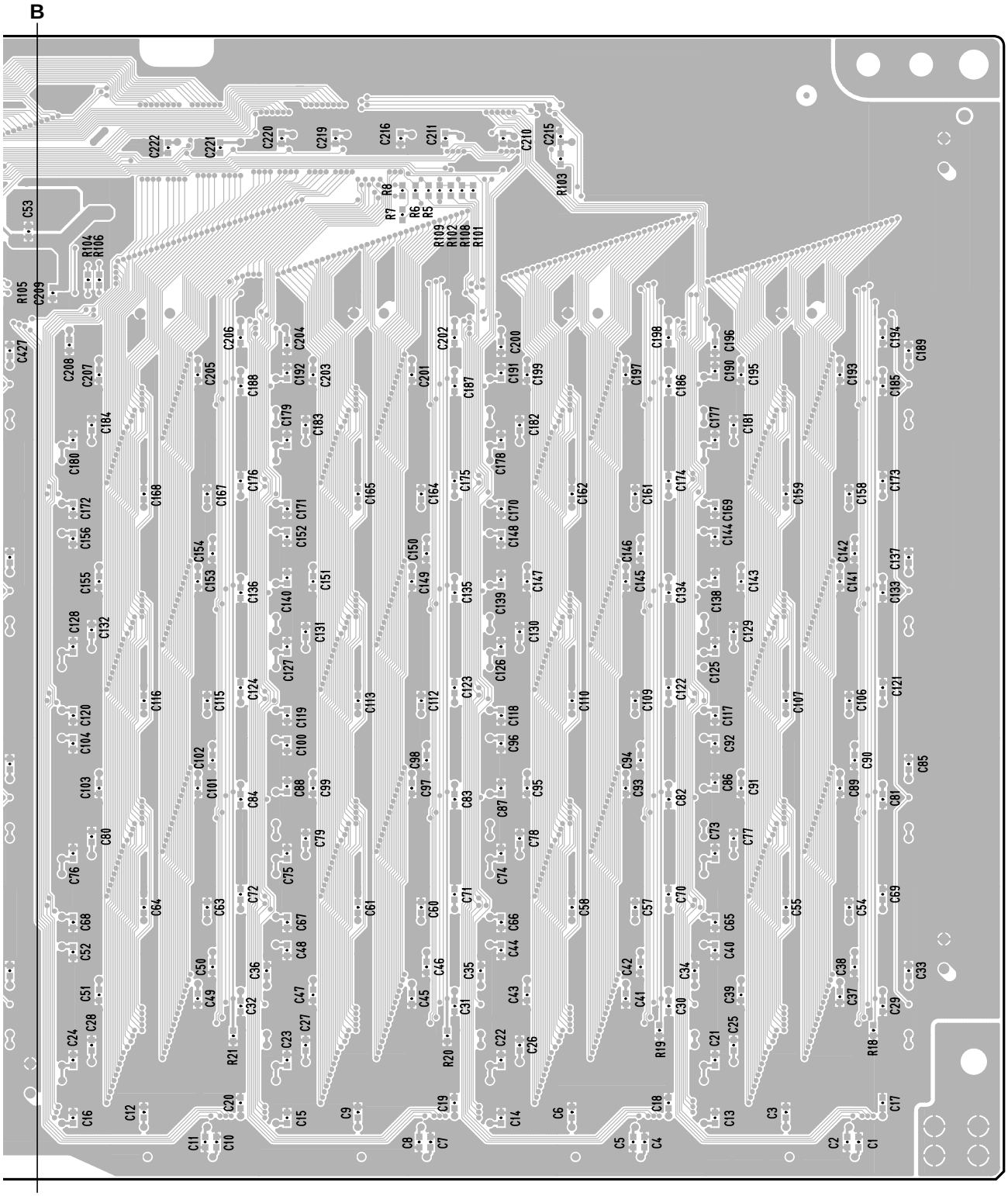

Pattern side

3NA-V587900⚠1

● CPU Circuit Board

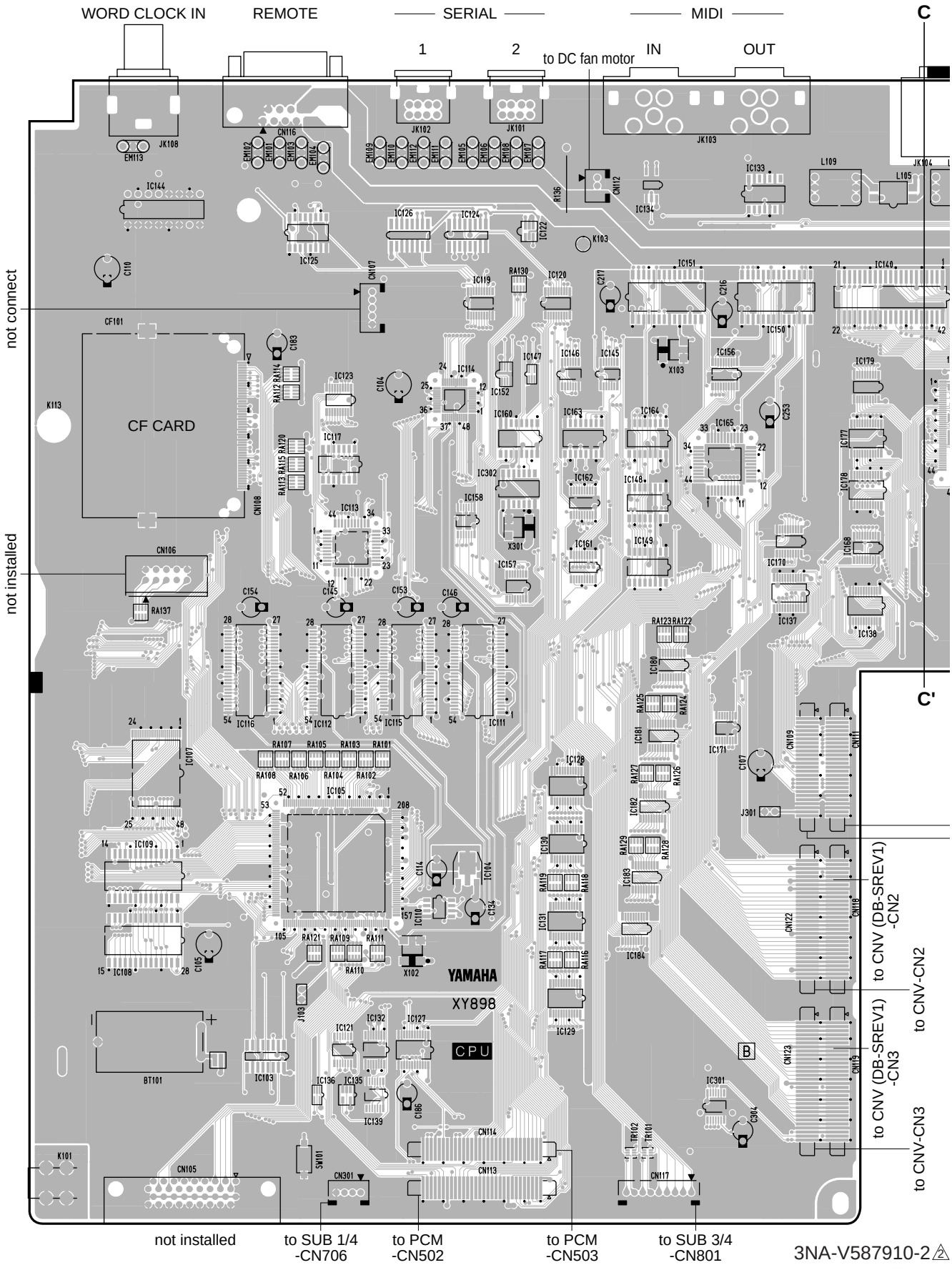

3NA-V587910-2 ⚠2

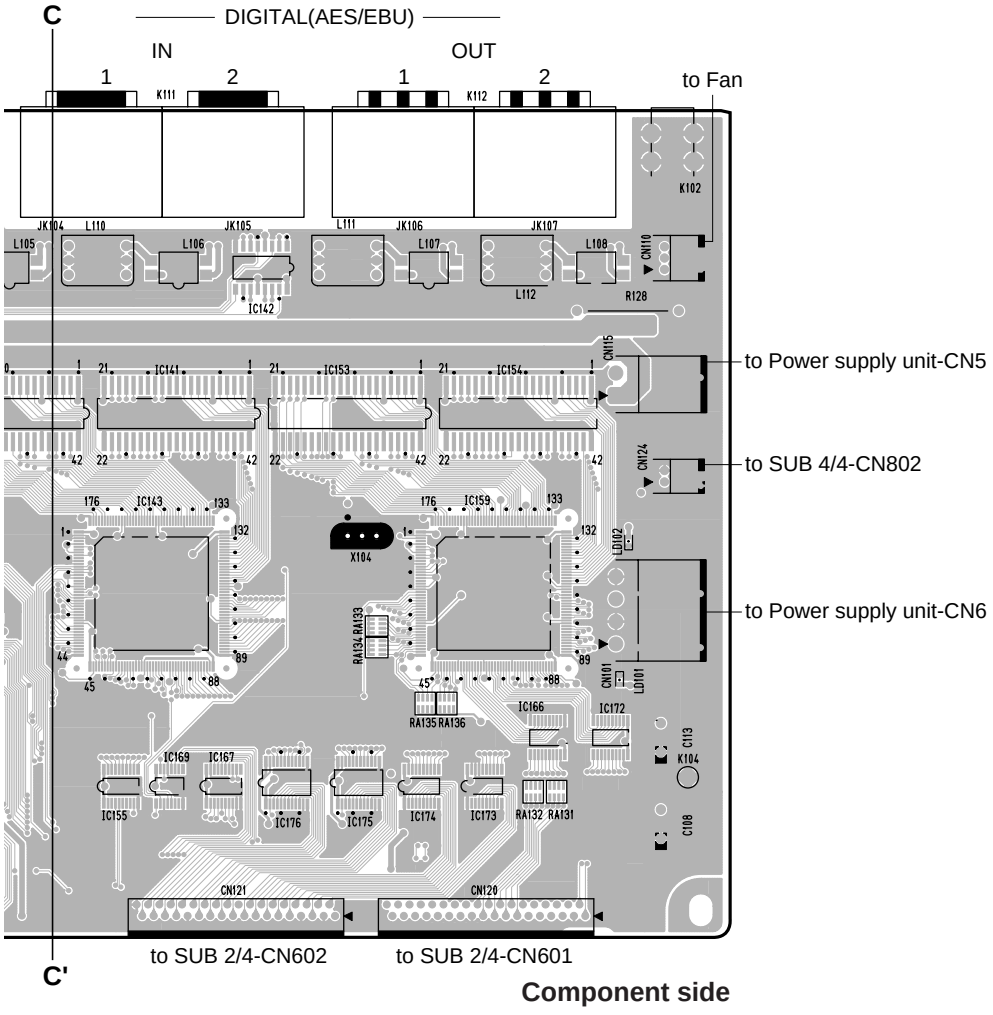

Component side

● CD-ROM Circuit Board

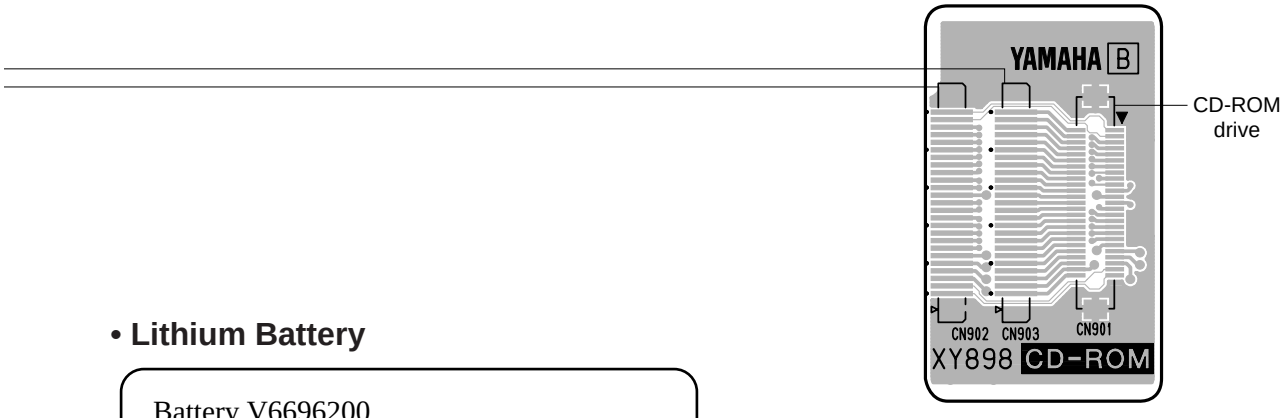

Component side

• Lithium Battery

Battery V6696200

- Notice for back-up battery removal
  Remove the solder; remove the back-up battery.
- Verwijder het soldeertin, verwijder daarna de batterij.

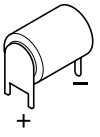

CPU, CD-ROM: 3NA-V587910-2 ⚠2

● CPU Circuit Board

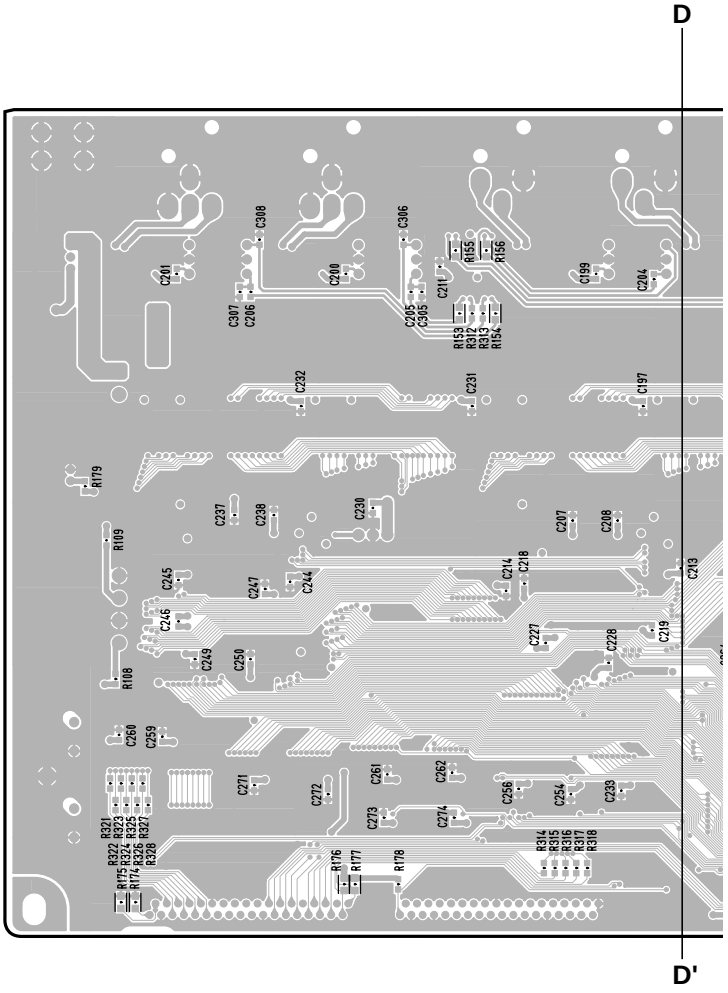

● CD-ROM Circuit Board

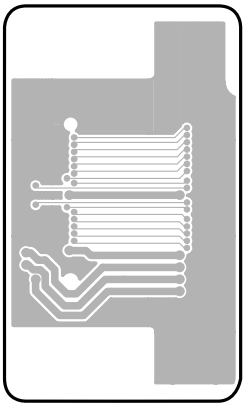

Pattern side

CPU, CD-ROM: 3NA-V587910-3⚠

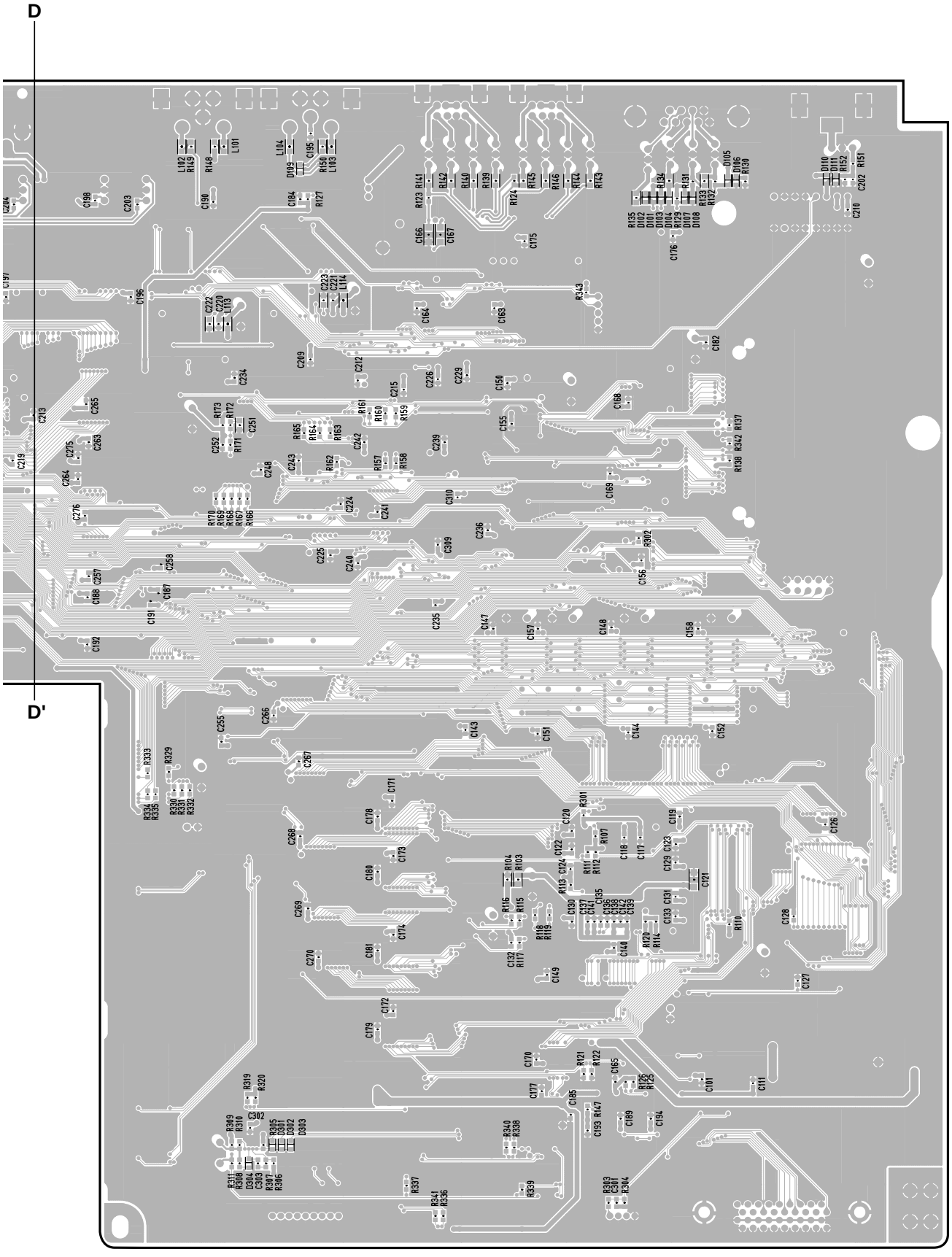

3NA-V587910-3⚠

Pattern side

● PCM Circuit Board

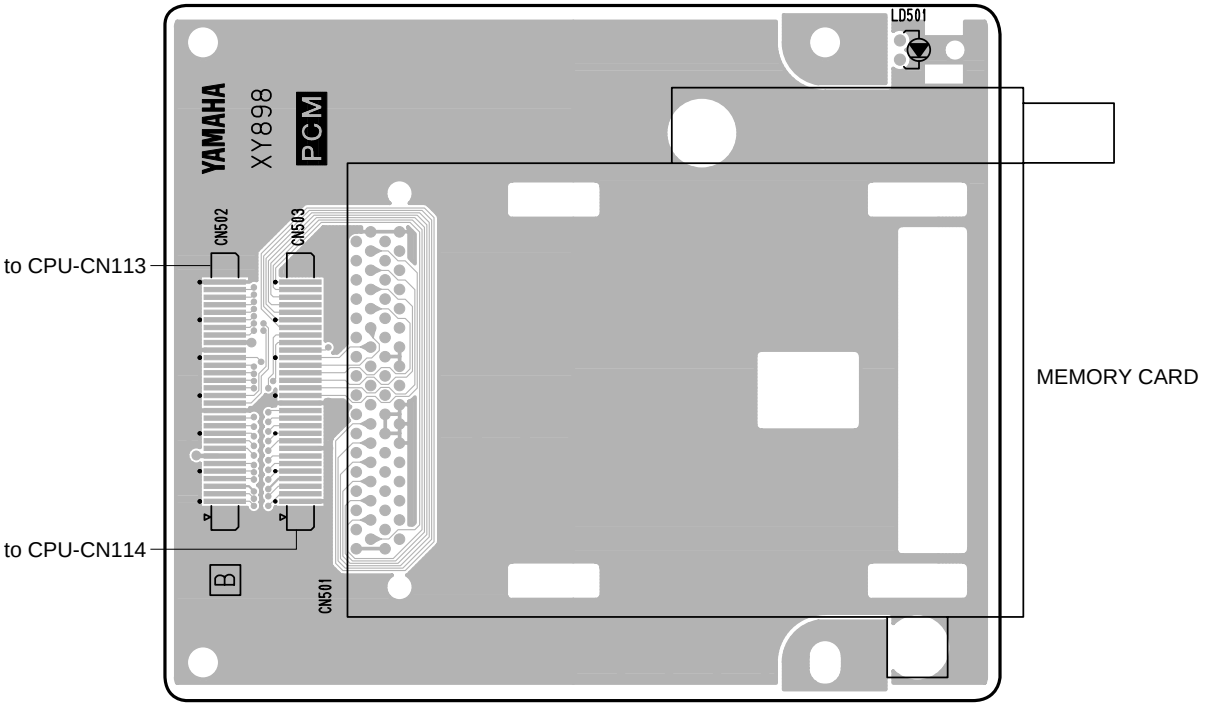

Component side

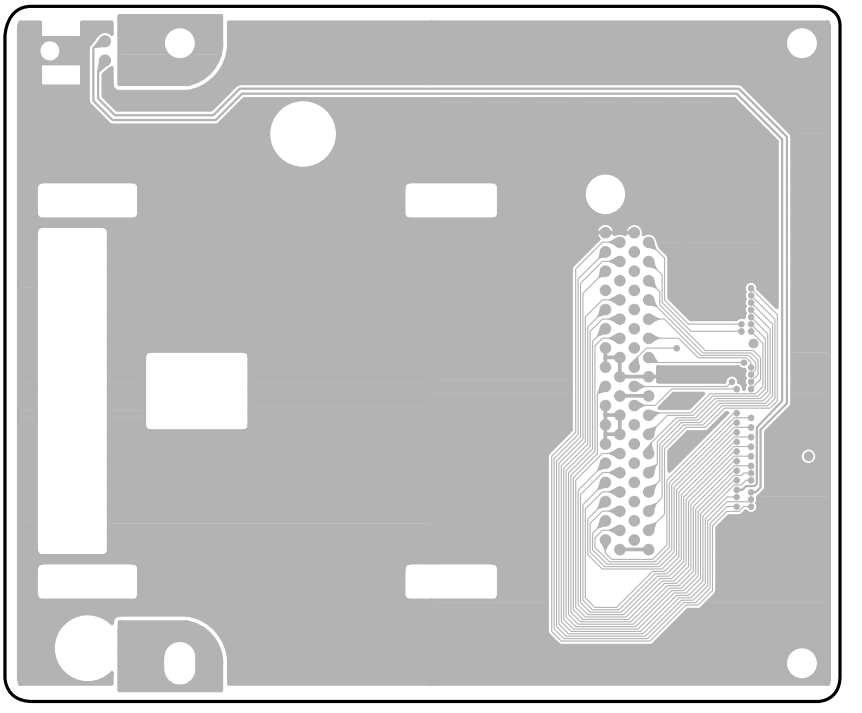

Pattern side

3NA-V587910-2⚠
3NA-V587910-3⚠

● SUB 1/4 Circuit Board

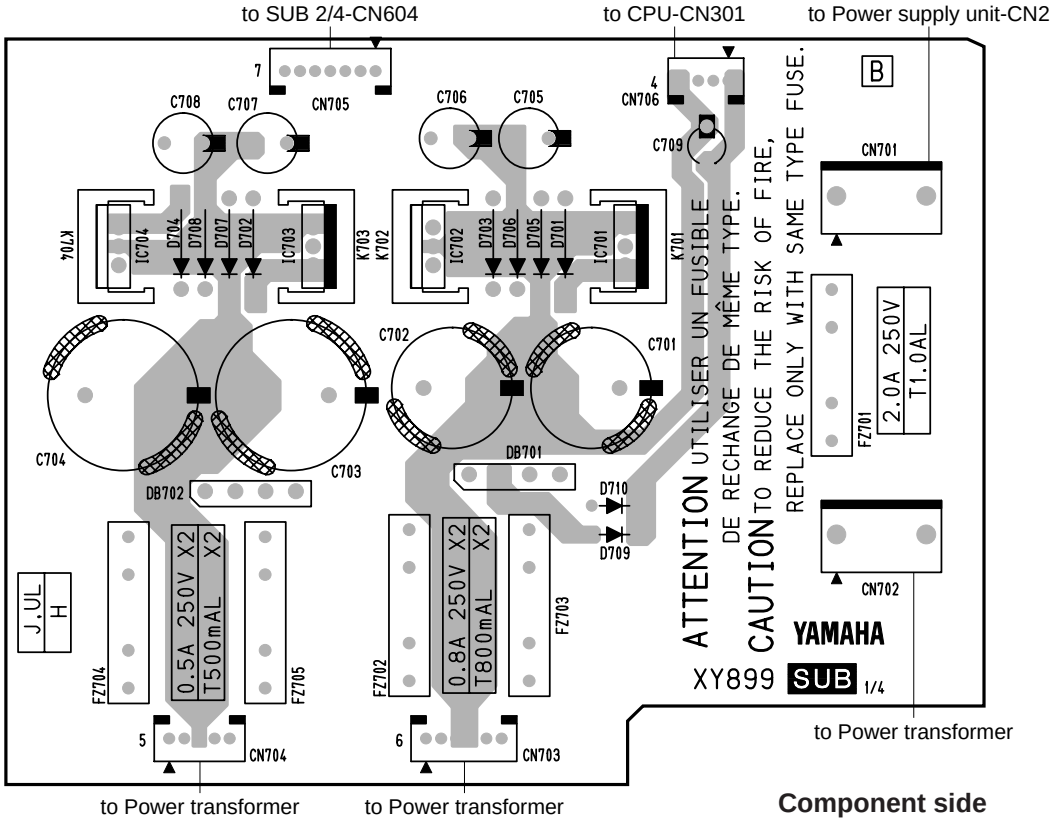

Component side

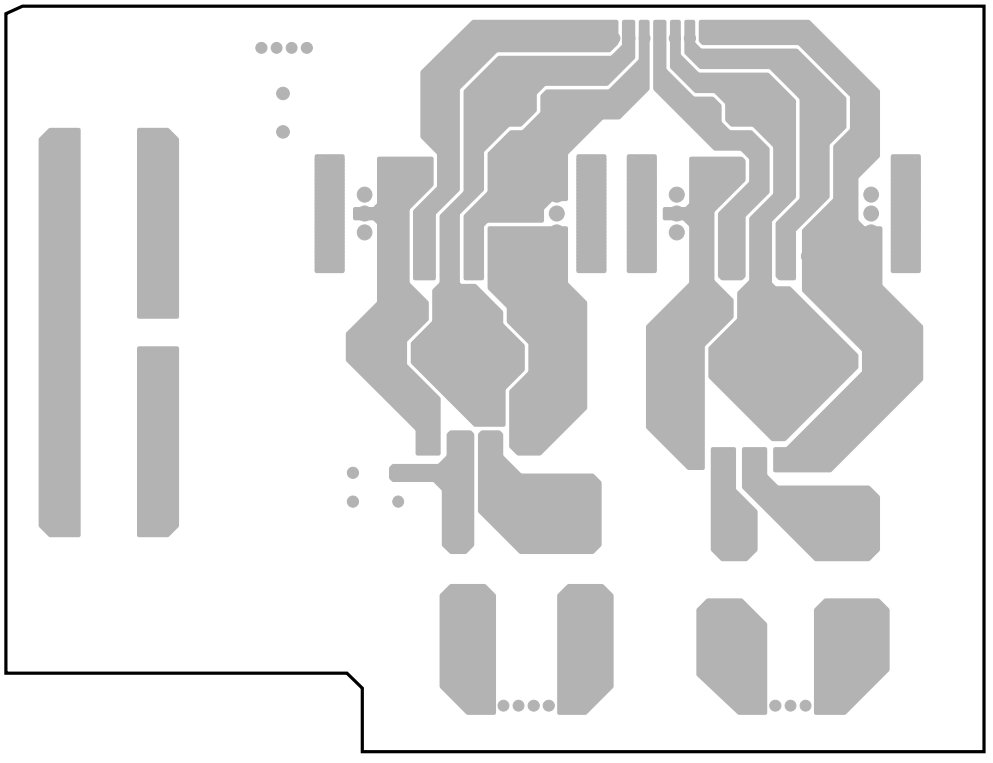

Pattern side

3NA-V587920 ⚠2

● SUB 2/4 Circuit Board

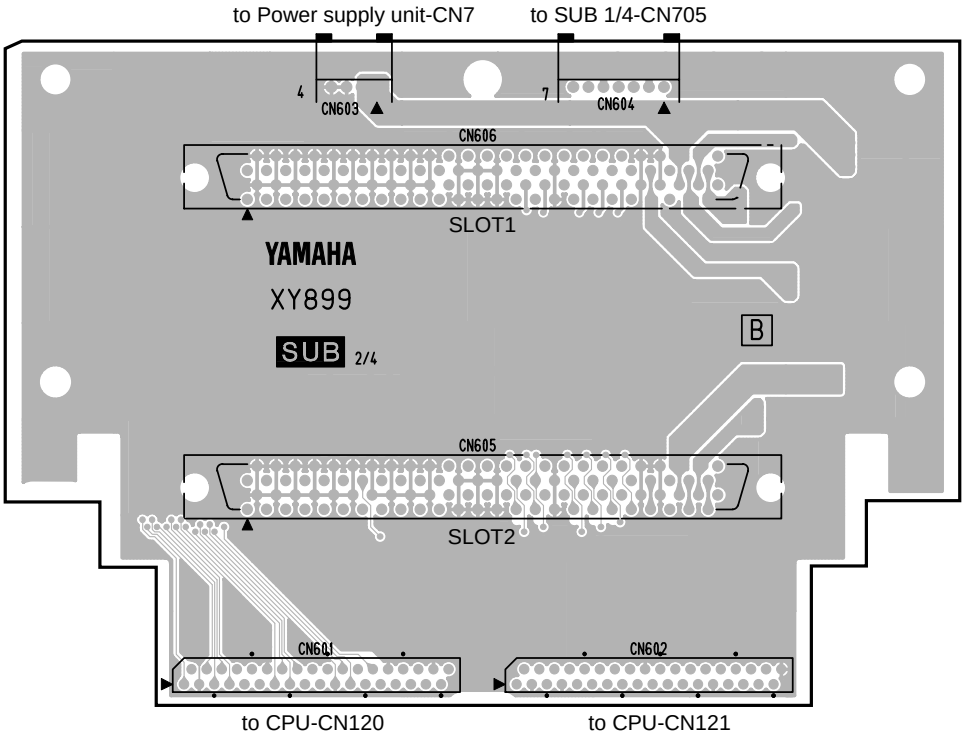

Component side

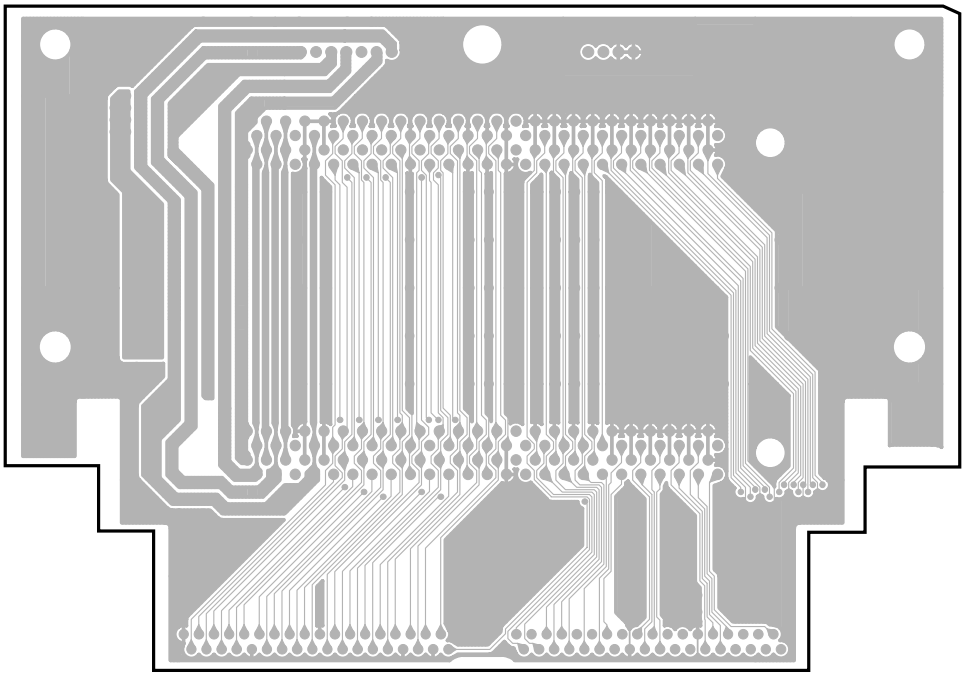

Pattern side

3NA-V587920 2

- SUB 3/4 Circuit Board

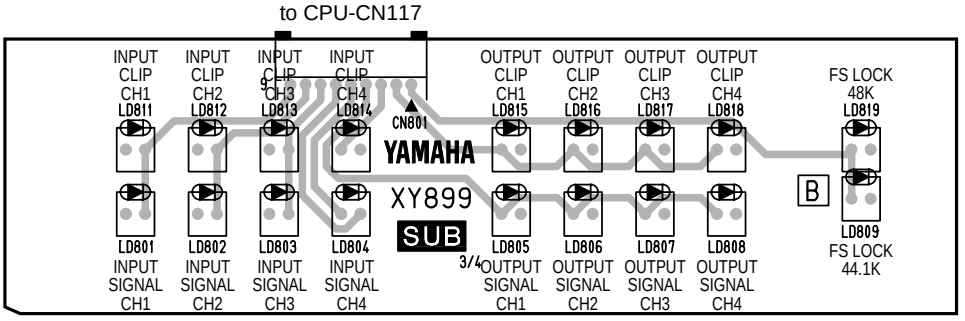

Component side

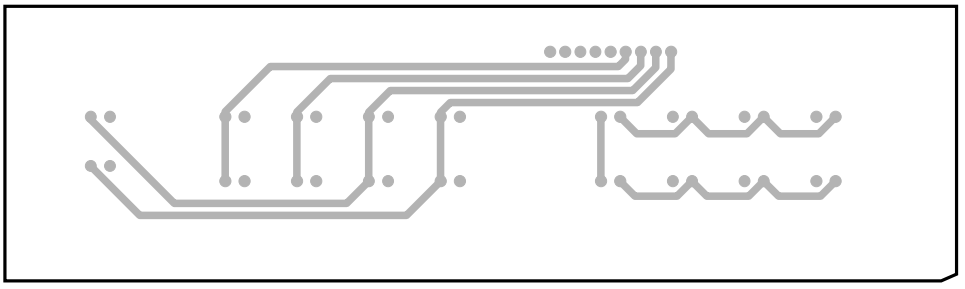

Pattern side

- SUB 4/4 Circuit Board

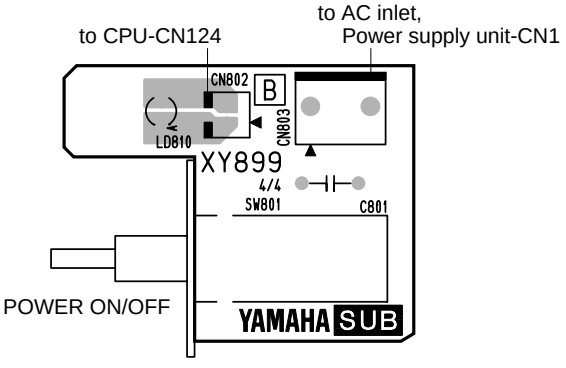

Component side

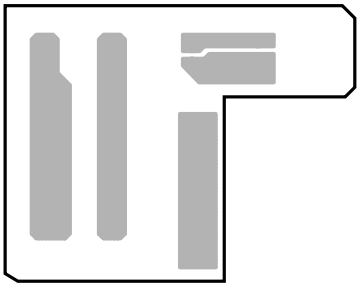

Pattern side

SUB 3/4, SUB 4/4: 3NA-V587920 ⚠2

■ UPGRADE AND TEST PROGRAM

1. Outline of test program

- The test program is a separate and individual application from the regular program. (Not provided with this program)
- The test program is provided in a file titled “diag.bin”.
- The test program is used by connecting the [SERIAL-1] terminal of the SREV1 and the RS232C terminal on an IBM-compatible PC using a DSUB9p-miniDIN8p cable.
- The terminal software “TeraTerm” is required when using on an IBM-compatible PC.
  “TeraTerm” can be downloaded from the URL shown below.
  http://www.vector.co.jp/authors/VA002416/teraterm.html
  (The address may be changed in future.)

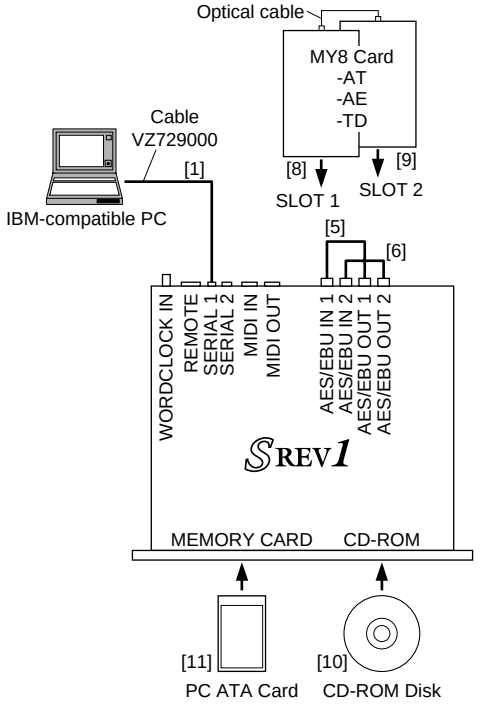

2. Preparations for inspection

No.	Items
[1]	Use a DSUB9p-miniDIN8p Cable to connect the [SERIAL-1] terminal and the RS232C terminal on the PC (*1)
[5]	Use a canon cable to connect [AES/EBU IN-1] and [AES/EBU OUT-1]
[6]	Use a canon cable to connect [AES/EBU IN-2] and [AES/EBU OUT-2]
[8][9]	If there is a MY8 card in the option slot, loop back (*2).
[10]	Insert the CD-ROM Disc (*3) provided in the SREV1 package into the CD-ROM drive.
[11]	Insert the PC ATA Card (*4) into the [MEMORY CARD] slot.

*1 Use an IBM-compatible PC that has a COM port. The settings for the COM port are: 8bit, Non-Parity, 1 Stop bit, No Flow Control.
*2 Refer to the items relating to the details of individual inspections (MY8) for information about the loop back of the MY8 card.
*3 This the CD-ROM disc included in the package with the product.
*4 Store the test program “diag.bin” in the PC ATA card for the inspection. Dowload “diag.bin” from the YSISS home page.

3. Starting the test program

Turn on the power and after the normal application has started, start the test program using the PC card with the test program in it.
Once the test program has been started, the following will appear on the “TeraTerm” terminal software.

```
SREV1 Diagnostics version 0.7
Copyright(C) 2000 YAMAHA Corporation All rights reserved.

wait for ready: [0]
exec_device_diagnostic: [14]
soft_reset 0:
soft_reset 1:
device not ready
CF=Slave, CD-ROM=Master

diag>■
```

4. Operating the test program

The various tests in the test program are started by entering them in the command line of the “TeraTerm” terminal software. As a result, the following will appear on the “TeraTerm” terminal software.

5. Test items

5-1. serv, total check

The inspection of the overall assembly is started by entering “serv” from the terminal. This will start the inspection and the progress status of the inspection for each item will be displayed on the terminal.

```
diag>  serv
```

The inspection is completed. If all the items are OK, the following is displayed.

```
[ Service Tests are All OK ]

diag>
```

If there were items that were NG, the following list will be displayed.

```
[ Results of Service Tests ]
----- Test of AES/EBU-1 -------
DIR5-1 Lock              .. NG [X]
DIT2-1 -> DIR5-1 Subcode .. NG [XXXX. XXXX. XXXX. XXXX. XXXX. XXXX. XXXX. XXXX]
DIT2-1 -> DIR5-1 Signal  .. NG [XXXX. XXXX. XXXX. XXXX. XXXX]
----- Test of MY Slot-2 -------
Card Detect              .. OK [MY8-AE]
Status (Lock/Hold)       .. NG [XXXX]
Audio Line               .. NG [XXXX. XXXX]

diag>
```

5-2. Individual checks

Inspections of the following items are performed.

No.	Individual commands	Description	Notes
1	System	Checks the SDRAM, SRAM, Battery	
2	LEDs	Tests that LEDs come on. Visually confirm that the LEDs come on in the predetermined sequence.	Must be confirmed visually.
3	Drive	Checks the internal Card, CD-ROM Drive, PCMCIA Slot	
4	DSP6	Checks the DSP6 and DRAM.	
5	CNV	Checks access to the CNV circuit board.	Automatically determines the number of CNV circuit boards. Makes two checks if there is a DB-SREV1
6	AES	Checks AES/EBU IN/OUT	
7	my8	Checks the miniYGDAI slot.	Insert two MY cards. Automatically determines the type of the MY cards.

5-2-1. sys

In the FlashROM and SDRAM program section, operation is normal if the test program starts.

Checks the SDRAM coefficient buffer range, backup RAM (SRAM) and battery.

Inspection items	Check these areas if NG
SDRAM (Data Bus)	SDRAM (IC111, IC112), IC110
SDRAM (Addr Bus)	SDRAM (IC111, IC112), IC110
Backup RAM (Data Bus)	SRAM (IC108, IC109)
Backup RAM (Addr Bus)	SRAM (IC108, IC109)
Battery	BT101, IC103

5-2-2. led

The LEDs will come on in the sequence shown below. Visually check that they come on as indicated.

Inspection items	Notes
All LEDs	All LEDs come on for 1 second.
Each LED	The LEDs come on one at a time in 0.3 second intervals. The sequence for the LEDs to come on is shown in the figure below. Two cycles are performed.
All LEDs Blink	All LEDs blink for 3 seconds.

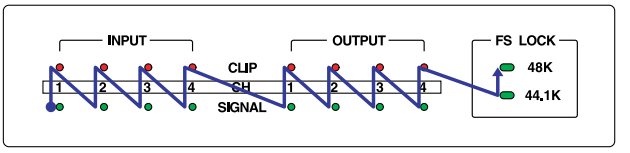

5-2-3. drive

Checks the internal Card, CD-ROM Drive, PCMCIA Slot

Insert the CD-ROM disk included in the package for the product in the CD-ROM drive.

Insert the PC ATA card for inspection into the PCMCIA slot.

Inspection items	Check these areas if NG
A: Internal CF Card	CF101, IC113, IC117, IC123, IC137, IC138
B: CD-ROM Drive	CD-ROM circuit board, CD-ROM Drive, CN109, CN110, IC113, IC117, IC123, IC137, IC138
C: PCMCIA Slot	PCMM circuit board, IC117, IC121, IC127, IC128, IC129, IC130, IC132, IC135, IC136, IC139

A: Internal CF Card, B: If both of the CD-ROM drives are NG, remove the FPC cable for CN109 and CN110. and reinspect the internal CF card.

5-2-4. dsp6

Checks the DSP6 and DRAM.

Inspection items	Check these areas if NG
CPU Interface (Data Bus)	[oX] IC159 [Xo] IC143 [XX] IC113, IC177, IC178, IC143, IC159
CPU Interface (Data Bus)	[oX] IC159 [Xo] IC143 [XX] IC113, IC169
CPU Interface (CS, TXB)	[oX] IC159 [Xo] IC143 [XX] IC113, IC179
CPU Interface (Addr Bus)	[oX] IC159 [Xo] IC143 [XX] IC113, IC179
CPU Interface (BWR/BRR)	[oX] IC159 [Xo] IC143 [XX] IC153, IC154, IC159
DRAM Interface (Data Bus)	[oX] IC153, IC154, IC159 [Xo] IC140, IC141, IC143
DRAM Interface (Addr Bus)	[oX] IC153, IC154, IC159 [Xo] IC140, IC141, IC143
DRAM Interface (MPR)	[oX] IC159 [Xo] IC143
PIO Connection	IC159, IC143

If all the items are NG, check the system clock (60 MHz).: X104

If all of the DRAM items are NG, check 128Fs, Sync.: IC165

5-2-5. cnv

Checks the CNV circuit boards.

Inspection items	Check these areas if NG
CPU Interface (Data Bus)	IC160, IC161, IC162, IC163, IC170, IC171
CPU Interface (Addr Bus)	IC164, IC170, IC171
CPU Interface (IRQ)	IC301
Data1 (Pulse <- Rand)	IC168, IC170
Coef2 (Linear <- Pulse)	IC168, IC170

Since DSP6 is used for inspecting Data1and Coef, make sure that the DSP6 has passed its test before proceeding.

5-2-6. aes

Checks AES/EBU IN/OUT

Inspection items	Check these areas if NG
DIR5-1 Micon Interface	IC113, IC145, IC146, IC150, IC156, IC157, IC158,IC162
DIR5-1 Lock	IC142, IC150
DIT2-1 -> DIR5-1 Subcode	IC113, IC142, IC148, IC157, IC158, IC162
DIT2-1 -> DIR5-1 Signal	IC142, IC148
DIR5-2 Micon Interface	IC113, IC145, IC146, IC151, IC156, IC157, IC158, IC162
DIR5-1 Lock	IC142, IC151
DIT2-2 -> DIR5-2 Subcode	IC113, IC142, IC149, IC157, IC158, IC162
DIT2-2 -> DIR5-2 Signal	IC142, IC149

5-2-7. my8

Checks the miniYGDAI slot.

Automatically identifies the MY cards in the slot. If the cards are MY-8AE, MY8-AT, MY8-TD, the following checks are performed. Only card identification is performed for all other cards. There is a need to loop back MY-8AE, MY8-AT, MY8-TD cards.

Inspection items	Check these areas if NG
Card Detect	IC113, IC155, IC157, IC158
Status (Lock/Hold)	IC160, IC165, IC167
Audio Line	IC166, IC172

MY8-AE

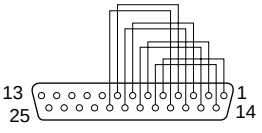

1 - 5 INPUT1/2 Hot - OUTPUT1/2 Hot
14 - 18 INPUT1/2 Cold - OUTPUT1/2 Cold

2 - 6 INPUT3/4 Hot - OUTPUT3/4 Hot
15 - 19 INPUT3/4 Cold - OUTPUT3/4 Cold

3 - 7 INPUT5/6 Hot - OUTPUT5/6 Hot
16 - 20 INPUT5/6 Cold - OUTPUT5/6 Cold

4 - 8 INPUT7/8 Hot - OUTPUT7/8 Hot
17 - 21 INPUT7/8 Cold - OUTPUT7/8 Cold

10, 12, 13, 21, 22, 23, 24, 25 GND
9, 11 OPEN

MY8-TD

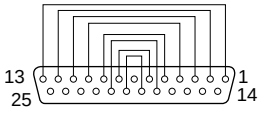

1 - 13	DO1.2 - DI1.2
2 - 12	DO3.4 - DI3.4
3 - 11	DO5.6 - DI5.6
4 - 10	DO7.8 - DI7.8
5 - 9	LRCKO - LRCKI
18 - 21	EMPO - EMPI
6 - 8	FS0O - FS0I
19 - 20	FS1O - FS1I
	7, 14, 15, 16, 17, 22, 23, 24, 25 GND

MY8-AE

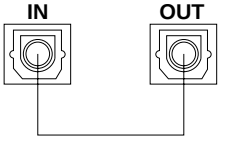

6. Upgrading

6-1. Upgrading SREV1 (using a PCMCIA card)

(1) Start up SREV1 in the normal manner.
(2) Insert the PC Card with the new version of the application version "srev1.bin" in it into the PCMCIA slot.
(3) Connect the [SERIAL-1] terminal and the RS-232C terminal on the PC.
(4) Use the PC to start "TeraTerm".
(5) Select "File" → "Send file" from the "TeraTerm menu".
(6) Select "pcmcia_update.bin" from the "TeraTerm: Send file" dialog box.
(7) Check the option for binary in the "TeraTerm: Send file" dialog box.
(8) Click the "Open" button in the "TeraTerm: Send file" dialog box.

Then, the "TeraTerm: Send file" dialog box closes, and then the following message will appear to shown that the version has been upgraded. It takes approximately 15 seconds to perform the upgrade.
Once the upgrade has been completed, the system will automatically reboot.

```
Version up from PCMCIA
delete a:srev1.bin.bak
rename a:srev1.bin a:srev1.bin.bak
copy c:srev1.bin a:srev1.bin
done.
Reboot SREV1
* tp
```

*) Download "srev1.bin" and "pcmcia_update.bin" from the YSISS home page and save in the PC card.
*) The contents of pcmcia_update.bin are as shown below.
F0 43 74 1E 07 11 00 00 7F 00 00 00 70 F7 (Binary Data 14bytes)
*) If there is absolutely no response from SREV1, the problem is with the connection.
Check the cables and other connections.

6-2. Upgrading RC-SREV1

SREV1 application file "srev1.bin" there is a execution module for RC-SREV1. When RC-SREV1 and SREV1 are connected and the version of RC-SREV1 is not compatible with the version of SREV1, the following message will appear on the screen for RC-SREV1.

VERSION MISMATCH
PUSH ANY KEY TO DOWNLOAD

Push any key to start the download from SREV1 to RC-SREV1 to perform the upgrade .It takes approximately 3.5 minutes from the time the key is pushed until the upgrade is completed. Once completed, RC-SREV1 will automatically reboot.

■ ERROR MESSAGES

Message	Reason	Solution
VERSION MISMATCH. PUSH ANY KEY TO DOWNLOAD.	The software versions of the SREV1 and RC-SREV1 do not match.	Press any button to download the necessary software from the SREV1 to the RC-SREV1 in order to match the software versions.
COMMUNICATION TIMEOUT.	Communication with the SREV1 failed.	Turn off both the SREV1 and RC-SREV1 and check the remote cable connections, also check for breaks in the cable.
WRITE PROTECTED.	A write protected Quick memory, program, or project was selected.	Turn off the protection in order to store or edit the title. The CD-ROM is always write protected.
INSERT MEDIA.	No media inserted.	Insert the necessary media. Note that it takes the SREV1 between 20 and 30 seconds to recognize CD-ROMs.
TITLE IS EMPTY!	No title has been entered or only spaces.	Enter some characters for the title.
!!! LOW BATTERY !!!	The SREV1's internal backup battery is getting low.	Ask your Yamaha dealer to change the battery as soon as possible.
!!! NO BATTERY !!! RESTORED FROM BACKUP.	The SREV1's internal backup battery is flat and the contents of the battery-backed memory were lost. The contents were restored from the backup file on the Internal card.	Ask your Yamaha dealer to change the battery as soon as possible.
DATA FILE NOT FOUND! INSERT PCMCIA CARD.	When the SREV1 was restarted, the Reverb mode changed, or a project loaded, the programs were loaded from the PC Card but the necessary impulse-response data could not be found.	Insert the PC Card containing the necessary impulse-response data.
DATA FILE NOT FOUND! INSERT CD-ROM DISC.	When the SREV1 was restarted, the Reverb mode changed, or a project loaded, the programs were loaded from the CD-ROM but the necessary impulse-response data could not be found.	Insert the CD-ROM containing the necessary impulse-response data.
EMPTY DATA! SOME DATA ISN'T LOADED. CAN'T SAVE THIS PROGRAM.	The impulse-response data for the program was not loaded.	Load the necessary impulse-response data, or load the program again.
NO SUFFICIENT SPACE! CAN'T SAVE THIS PROGRAM.	The program cannot be stored due to lack of space on the PC Card or Internal card.	Insert another PC Card, or delete some unnecessary programs in order to free some space.
DESTINATION WRITE PROTECTED!	You tried to edit the title of a program or project on the Library page, but the destination file is write protected.	Use another title, or turn off the write protection.
COULD NOT COMMUNICATE WITH SREV1. CHECK THE CABLE CONNECTION AND SREV1'S POWER, THEN TURN ON RC-SREV1 AGAIN.	Communication between the SREV1 and RC-SREV1 failed during startup.	If the RC-SREV1 is powered by an optional AC adapter, make sure that the SREV1 is turned on. Turn off both the SREV1 and RC-SREV1 and check the remote cable connections, also check for breaks in the cable.

Confirmation Messages

Message	Condition	Solution
CURRENT IS EDITED. RECALL PROGRAM OK?	Appears when you recall a program from the Quick memory page, but the current program contains unsaved changes.	To discard the current program's unsaved changes and recall the program, press OK. To cancel the operation, press CANCEL.
CURRENT IS EDITED, LOAD LIBRARY OK?	Appears when you recall a program from the Library page, but the current program contains unsaved changes.	To discard the current program's unsaved changes and load the program, press OK. To cancel the operation, press CANCEL.
SAME LIBRARY EXISTS! OVERWRITE OK?	Appears when you save the current program on the Library page, but a program with the same title already exists.	To save and overwrite the existing program, press OK. To cancel the operation, press CANCEL.
	Appears when you edit the title of the selected program on the Library page, but a program with the same title already exists.	To overwrite the existing program, press OK. To cancel the operation, press CANCEL.
DELETE LIBRARY OK?	Appears when you delete the selected program on the Library page.	Press OK to delete the selected program. To cancel the operation, press CANCEL.
CURRENT IS EDITED. LOAD PROJECT OK?	Appears when you recall a project from the Project page, but the current program contains unsaved changes.	To discard the current program's unsaved changes and load the project, press OK. To cancel the operation, press CANCEL.
SAME PROJECT EXISTS! OVERWRITE OK?	Appears when you save a project on the Project page, but a program with the same title already exists.	To save and overwrite the existing program, press OK. To cancel the operation, press CANCEL.
	Appears when you edit the title of the selected project on the Project page, but a program with the same title already exists.	To save and overwrite the existing program, press OK. To cancel the operation, press CANCEL.
DELETE PROJECT OK?	Appears when you delete the selected project on the Project page.	Press OK to delete the selected program. To cancel the operation, press CANCEL.
LOAD DATA OK?	Appears when you load the selected impulse-response data from the Data Load page.	Press OK to load the selected impulse-response data. To cancel the operation, press CANCEL.
CHANGE REV MODE OK?	Appears when you select a different Reverb mode on the Setup page.	Press OK to switch to the Reverb mode. To cancel the operation, press CANCEL.

General Messages

Message	Meaning
INITIALIZING...	The RC-SREV1's internal information is being updated.
SETTING REV MODE...	The Reverb mode is being changed.
RECALLING PROGRAM...	A Quick memory program is being recalled on the Program page.
STORING PROGRAM...	The current program is being stored to the selected Quick memory.
LOADING LIBRARY...	The selected program is being loaded on the Library page.
SAVING LIBRARY...	The current program is being saved on the Library page.
CHANGING TITLE...	The title of the selected program is being changed on the Library page.
DELETING LIBRARY...	The selected program is being deleted on the Library page.
CHANGING PROTECT MODE...	The protection setting of the selected program is being changed on the Library page.
DOWNLOADING FILE LIST...	The program list is being downloaded from the selected drive on the Library page.
LOADING DATA...	The selected impulse-response data is being loaded on the Data Load page.
DOWNLOADING FILE LIST...	The impulse-response data list is being downloaded from the selected drive on the Library page.
LOADING PROJECT...	The selected project is being loaded on the Project page.
SAVING PROJECT...	The selected project is being saved on the Project page.
CHANGING TITLE...	The title of the selected project is being changed on the Project page.
DELETING PROJECT...	The selected project is being deleted on the Project page.
CHANGING PROTECT MODE...	The protection setting of the selected project is being changed on the Project page.
DOWNLOADING FILE LIST...	The project list is being downloaded from the selected drive on the Project page.

■ MIDI IMPLEMENTATION CHART

[Sampling Reverberator] Date :1 Oct 2000

Model: SREV1 MIDI Implementation Chart Version : 1.0

Function...	Transmitted	Recognized	Remarks
Basic Channel Default Changed	1 - 16 1 - 16	1 - 16 1 - 16	Memorized
Mode Default Messages Altered	x x **********	OMNI OFF/OMNI ON x x	Memorized
Note Number: True voice	x **********	x x	
Velocity Note ON Note OFF	x x	x x	
After Touch Key's Ch's	x x	x x	
Pitch Bend	x	x	
Control Change 0–95	x	o	Assignable
Prog Change: True # x	x **********	x x	Assignable
System Exclusive	x	x	Parameter Change
System Common : Song Pos. : Song Sel. : Tune	x x x	x x x	
System Real Time: Clock Commands	x x	x x	
Aux Mes-sages :Local ON/OFF :All Notes OFF :Active Sens :Reset	x x x x	x x x x	
Notes			

Mode 1 : OMNI ON , POLY Mode 2 : OMNI ON ,MONO o : Yes

Mode 3 : OMNI OFF, POLY Mode 4 : OMNI OFF,MONO x : No

SAMPLING REVERBERATOR

SREV1

PARTS LIST

CONTENTS

Notes: DESTINATION ABBREVIATIONS

A:	Australian model	M:	South African model
B:	British model	O:	Chinese model
C:	Canadian model	Q:	South-east Asia model
D:	German model	T:	Taiwan model
E:	European model	U:	U.S.A. model
F:	French model	V:	General export model (110 V)
H:	North European model	W:	General export model (220 V)
I :	Indonesian model	N,X:	General export model
J :	Japanese model	Y:	Export model

WARNING

Components having special characteristics are marked ⚠ and must be replaced with parts having specification equal to those originally installed.

- The numbers in " QTY " show quantities for each unit.
- The parts with " **- -** " in " **PART NO.** " are not available as spare parts.
- The mark " } " in the remarks column indicates that these parts are interchangeable.
- The second letter of the shaded ( ) part number is O, not zero.
- The second letter of the shaded ( ) part number is I, not one.

OVERALL ASSEMBLY

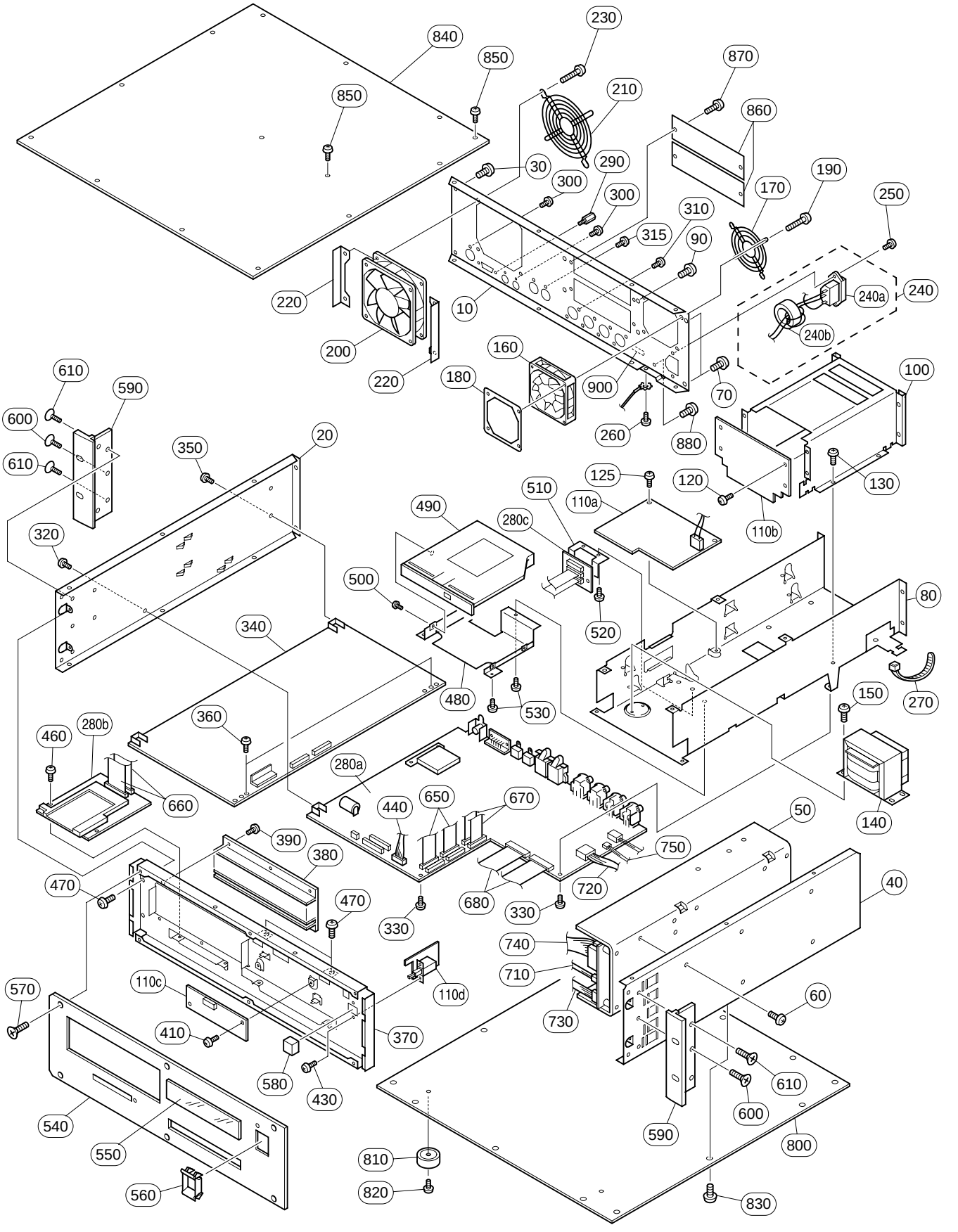

	REF NO.	PART NO.	DESCRIPTION			REMARKS	QTY	RANK
			OVERALL ASSEMBLY			SREV1		
		- -	Overall Assembly			J (V651940)		
		- -	Overall Assembly			U,V (V651950)		
		- -	Overall Assembly			H,B,W (V651960)		
		CB069250	Cord Holder	BK-1			8	01
		CB095100	Holder, Cord	K-103G			2	01
		CB836200	Cord Binder	S-70B				02
*	10	V6523400	Rear Panel			J		
*	10	V6523500	Rear Panel			U,V		
*	10	V6523600	Rear Panel			H,B,W		
*	20	V6521200	Side Panel	LEFT				
	30	VC688800	Bind Head Tapping Screw-B	A4.0X8 MFZN2BL			2	01
*	40	V6521300	Side Panel	RIGHT				
⚠ *	50	V6513400	Power Supply Unit	YSW01-U		J,U,V		
⚠ *	50	V6513500	Power Supply Unit	YSW01-H		H,B,W		
	60	VP156800	Bind Head Screw	A4.0X8 MFZN2BL			6	01
	70	VC688800	Bind Head Tapping Screw-B	A4.0X8 MFZN2BL			2	01
	80	- -	Stay			(V652150)		
	90	VC688800	Bind Head Tapping Screw-B	A4.0X8 MFZN2BL			4	01
*	100	V6521800	OPT Angle					
	110	- -	Circuit Board	SUB		J,U,V (V587920)		
	110	- -	Circuit Board	SUB		H,B,W (V668460)		
*	110a	AAX20980	Circuit Board	SUB 1/4		J,U,V		
*	110a	AAX20990	Circuit Board	SUB 1/4		H,B,W		
*	110b	AAX21000	Circuit Board	SUB 2/4				
*	110c	AAX21010	Circuit Board	SUB 3/4				
*	110d	AAX21020	Circuit Board	SUB 4/4				
	120	EP600190	Bind Head Tapping Screw-B	3.0X8 MFZN2BL			2	01
	125	EP600190	Bind Head Tapping Screw-B	3.0X8 MFZN2BL			2	01
	130	VC688800	Bind Head Tapping Screw-B	A4.0X8 MFZN2BL			4	01
⚠ *	140	XY916A00	Power Transformer			J		
⚠ *	140	XY917A00	Power Transformer	UL CSA		U,V		
⚠ *	140	XY918A00	Power Transformer	CEE		H,B,W		
	150	VC688800	Bind Head Tapping Screw-B	A4.0X8 MFZN2BL			4	01
	160	V3125300	Fan	MMS-06E12DL				08
	170	VN003900	Finger Guard	FG-06ULB				05
	180	VM964700	Fan Support Metal					09
	190	VR116500	Bind Head Screw	SP 4.0X25 MFZN2BL			4	01
	200	V5789100	DC Fan Motor	DC KDE1208PTS3-6				09
	210	VK949100	Fan Guard	FG-08UL PDR-601				06
*	220	V6444900	Fan Guide				2	
	230	VR116500	Pan Head Screw	SP 4.0X20 MFZN2BL			4	01
*	240	V6512600	Connector Assembly	ACIN ASSY				
⚠	240a	V5065200	AC Inlet	M1908-C 3P				03
	240b	VC362700	Ferrite Core	FR25/15/12-1400L			2	04
	250	EP600190	Bind Head Tapping Screw-B	3.0X8 MFZN2BL			2	01
	260	EG340360	Bind Head Screw	4.0X8 MFZN2BL				01
	270	CB069250	Cord Holder	BK-1				01
	280	- -	Circuit Board	CPU		(V587910)		
*	280a	AAX21030	Circuit Board	CPU				
*	280b	AAX21040	Circuit Board	PCM				
*	280c	AAX21050	Circuit Board	CD-ROM				
	290	VT362500	Jack Socket	17L-003A3			2	01
	300	VP156600	Bind Head Screw	A3.0X6 MFZN2BL			3	01
	310	VP157000	Bind Head Tapping Screw-B	A3.0X8 MFZN2BL			8	01
	315	EP630220	Bind Head Tapping Screw-P	3.0X8 MFZN2BL			2	01
	320	VP156600	Bind Head Screw	A3.0X6 MFZN2BL				01
	330	EP600190	Bind Head Tapping Screw-B	3.0X8 MFZN2BL			2	01
*	340	V5879000	Circuit Board	CNV				
	350	VP156600	Bind Head Screw	A3.0X6 MFZN2BL			2	01
	360	EP600190	Bind Head Tapping Screw-B	3.0X8 MFZN2BL			2	01
*	370	V6522400	Sub Chassis					
*	380	V6523100	Grille					
	390	VN413300	Bonding Tapping Screw-B	3.0X8 MFZN2BL			6	01
	410	EP600190	Bind Head Tapping Screw-B	3.0X8 MFZN2BL			2	01
	430	VP156600	Bind Head Screw	A3.0X6 MFZN2BL			2	01
	440	- -	Connector Assembly	9P 300mm C&C 2mm		(VR79270)		
	460	EP600190	Bind Head Tapping Screw-B	3.0X8 MFZN2BL			2	01
	470	VC688800	Bind Head Tapping Screw-B	A4.0X8 MFZN2BL			8	01
	480	- -	CD Angle			(V652190)		

*: New Parts

RANK: Japan only

	REF NO.	PART NO.	DESCRIPTION			REMARKS	QTY	RANK
*	490	**V6700100**	CD-ROM Drive	SR242S		CD-ROM		
*	500	**V6881500**	Pan Head Screw	2.0X2 MFZN2Y			4	
	510	**- -**	Angle Bracket, CN			(V735450)		
	520	**VP157000**	Bind Head Tapping Screw-B	A3.0X8 MFZN2BL			2	01
	530	**VP157000**	Bind Head Tapping Screw-B	A3.0X8 MFZN2BL			3	01
*	540	**V6522300**	Front Panel					
*	550	**V6522800**	Cover					
	560	**VL813000**	Escutcheon, Power Switch					03
	570	**V6221000**	Oval Head Screw	B4.0X10 MFZN2BL			6	01
	580	**VL812900**	Power Switch Knob			POWER ON/OFF		03
*	590	**V7447100**	Mount Bracket				2	
	600	**V6221000**	Oval Head Screw	B4.0X10 MFZN2BL			2	01
	610	**VS153600**	Oval Head Screw	4.0X8 MFZN2BL			8	01
*	650	**MFA30100**	Cable	30P 100mm P=1.0			2	
*	660	**MFA30100**	Cable	30P 100mm P=1.0			2	
*	670	**MFA25300**	Cable	25P 300mm P=1.0			2	
*	680	**MFA36080**	Cable	36P 80mm P=1.0			2	
	710	**- -**	Connector Assembly	REM-PS ASSY VH-2P		(V651290)		
	720	**- -**	Connector Assembly	CPU-PS ASSY VH-4P		(V651300)		
	730	**- -**	Connector Assembly	YGDA-PS ASSY PH-4P		(V651310)		
	740	**- -**	Connector Assembly	CNV1-PS ASSY VH10P		(V651320)		
	750	**- -**	Connector Assembly	2P 500mm C&C 2mm		(VR78120)		
	780	**CB069250**	Cord Holder	BK-1			2	01
*	800	**V6522000**	Bottom Cover					
	810	**CB806590**	Leg Black	ABS			4	03
	820	**VR138400**	Bind Head Tapping Screw-B	4.0X12 MFZN2BL			4	01
	830	**VC688800**	Bind Head Tapping Screw-B	A4.0X8 MFZN2BL			12	01
*	840	**V6522100**	Top Cover					
	850	**VC688800**	Bind Head Tapping Screw-B	A4.0X8 MFZN2BL			14	01
	860	**VZ678500**	IF Plate				2	05
	870	**VP156900**	Bind Head Screw	A4.0X12 MFZN2BL			4	01
	880	**EG340360**	Bind Head Screw	4.0X8 MFZN2BL				01
	900	**VA039300**	Label			U,V		03
	920	**- -**	Caution Label			U,V (V533510)	2	
			ACCESSORIES					09
⚠		**V5800000**	AC Cord	J 3P 15A		J		08
⚠		**VB927800**	AC Cord	CSA		U,V		08
⚠		**VB928000**	AC Cord	VDE		H,W		08
⚠ *		**V6190800**	AC Cord	BS		B		
*		**XZ449A00**	Optical Disk	CD-ROM 650MB 12cm				
		- -	Connector Assembly	CNV(Option)-PS VH10P		(V651320)		

*: New Parts RANK: Japan only

■ DB-SREV1 (Option)

	REF NO.	PART NO.	DESCRIPTION			REMARKS	QTY	RANK
			DSP EXPANSION BOARD			DB-SREV1		
		VP156600	Bind Head Screw	A3.0X6 MFZN2BL			2	01
		EP600190	Bind Head Tapping Screw-B	3.0X8 MFZN2BL			2	01
*		**MFA30140**	Cable	30P 140mm P=1.0			2	
*		**V5879000**	Circuit Board	CNV				

*: New Parts RANK: Japan only

ELECTRICAL PARTS

	REF NO.	PART NO.	DESCRIPTION			REMARKS	QTY	RANK
			ELECTRICAL PARTS			SREV1		
*		**V5879000**	Circuit Board	CNV		SREV1/DB-SREV1 (XY897B0)		
		- -	Circuit Board	CPU		(V587910)(XY898B0)		
*		**AAX21030**	Circuit Board	CPU		(XY898B0)		
*		**AAX21040**	Circuit Board	PCM		(XY898B0)		
*		**AAX21050**	Circuit Board	CD-ROM		(XY898B0)		
		- -	Circuit Board	SUB		J,U,V (V587920)(XY899B0)		
		- -	Circuit Board	SUB		H,B,W (V668460)(XY899B0)		
*		**AAX20980**	Circuit Board	SUB 1/4		J,U,V (XY899B0)		
*		**AAX20990**	Circuit Board	SUB 1/4		H,B,W (XY899B0)		
*		**AAX21000**	Circuit Board	SUB 2/4		(XY899B0)		
*		**AAX21010**	Circuit Board	SUB 3/4		(XY899B0)		
*		**AAX21020**	Circuit Board	SUB 4/4		(XY899B0)		
*		**V5879000**	Circuit Board	CNV		SREV1/DB-SREV1 (XY897B0)		
	C1	**US135100**	Ceramic Capacitor-F (chip)	0.1000 16V Z				01
	-55	**US135100**	Ceramic Capacitor-F (chip)	0.1000 16V Z				01
	C56	**UR818470**	Electrolytic Cap.	470.00 6.3V				01
	C57	**US135100**	Ceramic Capacitor-F (chip)	0.1000 16V Z				01
	C58	**US135100**	Ceramic Capacitor-F (chip)	0.1000 16V Z				01
	C60	**US135100**	Ceramic Capacitor-F (chip)	0.1000 16V Z				01
	C61	**US135100**	Ceramic Capacitor-F (chip)	0.1000 16V Z				01
	C63	**US135100**	Ceramic Capacitor-F (chip)	0.1000 16V Z				01
	-104	**US135100**	Ceramic Capacitor-F (chip)	0.1000 16V Z				01
	C106	**US135100**	Ceramic Capacitor-F (chip)	0.1000 16V Z				01
	C107	**US135100**	Ceramic Capacitor-F (chip)	0.1000 16V Z				01
	C109	**US135100**	Ceramic Capacitor-F (chip)	0.1000 16V Z				01
	C110	**US135100**	Ceramic Capacitor-F (chip)	0.1000 16V Z				01
	C112	**US135100**	Ceramic Capacitor-F (chip)	0.1000 16V Z				01
	C113	**US135100**	Ceramic Capacitor-F (chip)	0.1000 16V Z				01
	C115	**US135100**	Ceramic Capacitor-F (chip)	0.1000 16V Z				01
	-156	**US135100**	Ceramic Capacitor-F (chip)	0.1000 16V Z				01
	C158	**US135100**	Ceramic Capacitor-F (chip)	0.1000 16V Z				01
	C159	**US135100**	Ceramic Capacitor-F (chip)	0.1000 16V Z				01
	C161	**US135100**	Ceramic Capacitor-F (chip)	0.1000 16V Z				01
	C162	**US135100**	Ceramic Capacitor-F (chip)	0.1000 16V Z				01
	C164	**US135100**	Ceramic Capacitor-F (chip)	0.1000 16V Z				01
	C165	**US135100**	Ceramic Capacitor-F (chip)	0.1000 16V Z				01
	C167	**US135100**	Ceramic Capacitor-F (chip)	0.1000 16V Z				01
	-226	**US135100**	Ceramic Capacitor-F (chip)	0.1000 16V Z				01
	C227	**UR818470**	Electrolytic Cap.	470.00 6.3V				01
	-238	**UR818470**	Electrolytic Cap.	470.00 6.3V				01
	C239	**US135100**	Ceramic Capacitor-F (chip)	0.1000 16V Z				01
	-290	**US135100**	Ceramic Capacitor-F (chip)	0.1000 16V Z				01
	C292	**US135100**	Ceramic Capacitor-F (chip)	0.1000 16V Z				01
	C293	**US135100**	Ceramic Capacitor-F (chip)	0.1000 16V Z				01
	C295	**US135100**	Ceramic Capacitor-F (chip)	0.1000 16V Z				01
	C296	**US135100**	Ceramic Capacitor-F (chip)	0.1000 16V Z				01
	C298	**US135100**	Ceramic Capacitor-F (chip)	0.1000 16V Z				01
	C299	**US135100**	Ceramic Capacitor-F (chip)	0.1000 16V Z				01
	C301	**US135100**	Ceramic Capacitor-F (chip)	0.1000 16V Z				01
	-342	**US135100**	Ceramic Capacitor-F (chip)	0.1000 16V Z				01
	C344	**US135100**	Ceramic Capacitor-F (chip)	0.1000 16V Z				01
	C345	**US135100**	Ceramic Capacitor-F (chip)	0.1000 16V Z				01
	C347	**US135100**	Ceramic Capacitor-F (chip)	0.1000 16V Z				01
	C348	**US135100**	Ceramic Capacitor-F (chip)	0.1000 16V Z				01
	C350	**US135100**	Ceramic Capacitor-F (chip)	0.1000 16V Z				01
	C351	**US135100**	Ceramic Capacitor-F (chip)	0.1000 16V Z				01
	C353	**US135100**	Ceramic Capacitor-F (chip)	0.1000 16V Z				01
	-394	**US135100**	Ceramic Capacitor-F (chip)	0.1000 16V Z				01
	C396	**US135100**	Ceramic Capacitor-F (chip)	0.1000 16V Z				01
	C397	**US135100**	Ceramic Capacitor-F (chip)	0.1000 16V Z				01
	C399	**US135100**	Ceramic Capacitor-F (chip)	0.1000 16V Z				01
	C400	**US135100**	Ceramic Capacitor-F (chip)	0.1000 16V Z				01
	C402	**US135100**	Ceramic Capacitor-F (chip)	0.1000 16V Z				01
	C403	**US135100**	Ceramic Capacitor-F (chip)	0.1000 16V Z				01
	C405	**US135100**	Ceramic Capacitor-F (chip)	0.1000 16V Z				01
	-446	**US135100**	Ceramic Capacitor-F (chip)	0.1000 16V Z				01
	CN1	**LB932100**	Base Post Connector	VH 10P TE				02
	CN2	**VT387400**	Connector, FFC	52610 30P TE				05

*: New Parts

RANK: Japan only

	REF NO.	PART NO.	DESCRIPTION			REMARKS	QTY	RANK
	CN3	**VT387400**	Connector, FFC	52610 30P TE				05
*	IC1	**XW867A00**	IC	YSS916-H		CNV3 DSP		14
*	-16	**XW867A00**	IC	YSS916-H		CNV3 DSP		14
*	IC17	**XZ512A00**	IC	HD74LVC540AT		BUFFER		03
*	IC18	**XV893A00**	IC	TC74VHC139FT		DECODER		02
*	IC19	**XZ495A00**	IC	TC74VHC138FT		DECODER		01
*	-22	**XZ495A00**	IC	TC74VHC138FT		DECODER		01
	IC23	**XU797A00**	IC	TC74VHC245FT		BUFFER		03
	-34	**XU797A00**	IC	TC74VHC245FT		BUFFER		03
*	IC35	**XW867A00**	IC	YSS916-H		CNV3 DSP		14
*	-50	**XW867A00**	IC	YSS916-H		CNV3 DSP		14
	K1	**VC719300**	Terminal Plate	P-424				01
	K2	**VC719300**	Terminal Plate	P-424				01
	R5	**RD354100**	Carbon Resistor (chip)	10 63M J				01
	-12	**RD354100**	Carbon Resistor (chip)	10 63M J				01
	R13	**RD354330**	Carbon Resistor (chip)	33 63M J				01
	-16	**RD354330**	Carbon Resistor (chip)	33 63M J				01
	R18	**RD356200**	Carbon Resistor (chip)	2.0K 63M J				01
	-21	**RD356200**	Carbon Resistor (chip)	2.0K 63M J				01
	R101	**RD354330**	Carbon Resistor (chip)	33 63M J				01
	R102	**RD354330**	Carbon Resistor (chip)	33 63M J				01
	R103	**RD356470**	Carbon Resistor (chip)	4.7K 63M J				01
	R104	**RD354100**	Carbon Resistor (chip)	10 63M J				01
	-107	**RD354100**	Carbon Resistor (chip)	10 63M J				01
	R108	**RD354330**	Carbon Resistor (chip)	33 63M J				01
	R109	**RD354330**	Carbon Resistor (chip)	33 63M J				01
	R110	**RD356200**	Carbon Resistor (chip)	2.0K 63M J				01
	-113	**RD356200**	Carbon Resistor (chip)	2.0K 63M J				01
	RA1	**RE047100**	Resistor Array	10KX4				01
	-16	**RE047100**	Resistor Array	10KX4				01
*	X1	**V5964800**	Quartz Crystal Unit	60MHz DSO751SV				05
		- -	Circuit Board	CPU		(V587910)(XY898B0)		
*		**AAX21030**	Circuit Board	CPU		(XY898B0)		
*		**AAX21040**	Circuit Board	PCM		(XY898B0)		
*		**AAX21050**	Circuit Board	CD-ROM		(XY898B0)		
		VB659000	Bind Head Screw	3.0X8 MFZN2BL			2	01
		ES200030	Hexagonal Nut	#1 3.0 MFZN2BL			2	01
		VH870600	LED Socket			MEMORY CARD		01
*	BT101	**V6696200**	Lithium Battery	CR1/2 6.L-F1ST4				
	C101	**US135100**	Ceramic Capacitor-F (chip)	0.1000 16V Z				01
	C104	**UR818470**	Electrolytic Cap.	470.00 6.3V				01
	C105	**UR818470**	Electrolytic Cap.	470.00 6.3V				01
	C107	**UR818470**	Electrolytic Cap.	470.00 6.3V				01
	C108	**UR818470**	Electrolytic Cap.	470.00 6.3V				01
	C110	**UR818470**	Electrolytic Cap.	470.00 6.3V				01
	C111	**US135100**	Ceramic Capacitor-F (chip)	0.1000 16V Z				01
	C113	**UR818470**	Electrolytic Cap.	470.00 6.3V				01
	C114	**UR837220**	Electrolytic Cap.	22.00 16.0V				01
	C117	**US135100**	Ceramic Capacitor-F (chip)	0.1000 16V Z				01
	-120	**US135100**	Ceramic Capacitor-F (chip)	0.1000 16V Z				01
	C121	**VV020600**	Monolithic Ceramic Cap.	3.300 10V K				01
	C122	**US135100**	Ceramic Capacitor-F (chip)	0.1000 16V Z				01
	-124	**US135100**	Ceramic Capacitor-F (chip)	0.1000 16V Z				01
	C126	**US135100**	Ceramic Capacitor-F (chip)	0.1000 16V Z				01
	-133	**US135100**	Ceramic Capacitor-F (chip)	0.1000 16V Z				01
	C134	**UR837220**	Electrolytic Cap.	22.00 16.0V				01
	C135	**US062470**	Ceramic Capacitor-SL(chip)	470P 50V J				01
	C136	**US062470**	Ceramic Capacitor-SL(chip)	470P 50V J				01
	C137	**US135100**	Ceramic Capacitor-F (chip)	0.1000 16V Z				01
	-144	**US135100**	Ceramic Capacitor-F (chip)	0.1000 16V Z				01
	C145	**UR837220**	Electrolytic Cap.	22.00 16.0V				01
	C146	**UR837220**	Electrolytic Cap.	22.00 16.0V				01
	C147	**US135100**	Ceramic Capacitor-F (chip)	0.1000 16V Z				01
	-150	**US135100**	Ceramic Capacitor-F (chip)	0.1000 16V Z				01
	C155	**US135100**	Ceramic Capacitor-F (chip)	0.1000 16V Z				01
	C156	**US135100**	Ceramic Capacitor-F (chip)	0.1000 16V Z				01
	C163	**US135100**	Ceramic Capacitor-F (chip)	0.1000 16V Z				01
	-165	**US135100**	Ceramic Capacitor-F (chip)	0.1000 16V Z				01
	C166	**VV020600**	Monolithic Ceramic Cap.	3.300 10V K				01

*: New Parts

RANK: Japan only

	REF NO.	PART NO.	DESCRIPTION			REMARKS	QTY	RANK
	C167	**VV020600**	Monolithic Ceramic Cap.	3.300 10V K				01
	C168	**US035100**	Ceramic Capacitor-B (chip)	0.1000 16V K				01
	-182	**US135100**	Ceramic Capacitor-F (chip)	0.1000 16V Z				01
	C183	**UR837220**	Electrolytic Cap.	22.00 16.0V				01
	C184	**US135100**	Ceramic Capacitor-F (chip)	0.1000 16V Z				01
	C185	**US135100**	Ceramic Capacitor-F (chip)	0.1000 16V Z				01
	C186	**UR837220**	Electrolytic Cap.	22.00 16.0V				01
	C187	**US135100**	Ceramic Capacitor-F (chip)	0.1000 16V Z				01
	-197	**US135100**	Ceramic Capacitor-F (chip)	0.1000 16V Z				01
	C198	**US035100**	Ceramic Capacitor-B (chip)	0.1000 16V K				01
	-201	**US035100**	Ceramic Capacitor-B (chip)	0.1000 16V K				01
	C202	**US062100**	Ceramic Capacitor-SL(chip)	100P 50V J				01
	C203	**US035100**	Ceramic Capacitor-B (chip)	0.1000 16V K				01
	-206	**US035100**	Ceramic Capacitor-B (chip)	0.1000 16V K				01
	C207	**US135100**	Ceramic Capacitor-F (chip)	0.1000 16V Z				01
	-209	**US135100**	Ceramic Capacitor-F (chip)	0.1000 16V Z				01
	C210	**US035100**	Ceramic Capacitor-B (chip)	0.1000 16V K				01
	C211	**US135100**	Ceramic Capacitor-F (chip)	0.1000 16V Z				01
	-215	**US135100**	Ceramic Capacitor-F (chip)	0.1000 16V Z				01
	C216	**UR837100**	Electrolytic Cap.	10.00 16.0V				01
	C217	**UR837100**	Electrolytic Cap.	10.00 16.0V				01
	C218	**US135100**	Ceramic Capacitor-F (chip)	0.1000 16V Z				01
	-221	**US135100**	Ceramic Capacitor-F (chip)	0.1000 16V Z				01
	C222	**VI230900**	Monolithic Ceramic Cap.	B 4700P 50V J				01
	C223	**VI230900**	Monolithic Ceramic Cap.	B 4700P 50V J				01
	C224	**US135100**	Ceramic Capacitor-F (chip)	0.1000 16V Z				01
	-250	**US135100**	Ceramic Capacitor-F (chip)	0.1000 16V Z				01
	C251	**VR813300**	Ceramic Capacitor-B (chip)	0.22 16V K				01
	C252	**US135100**	Ceramic Capacitor-F (chip)	0.1000 16V Z				01
	C253	**UR837220**	Electrolytic Cap.	22.00 16.0V				01
	C254	**US135100**	Ceramic Capacitor-F (chip)	0.1000 16V Z				01
	-276	**US135100**	Ceramic Capacitor-F (chip)	0.1000 16V Z				01
	C301	**US135100**	Ceramic Capacitor-F (chip)	0.1000 16V Z				01
	-303	**US135100**	Ceramic Capacitor-F (chip)	0.1000 16V Z				01
	C304	**UR866100**	Electrolytic Cap.	1.00 50.0V				01
	C305	**US062330**	Ceramic Capacitor-SL(chip)	330P 50V J				01
	-308	**US062330**	Ceramic Capacitor-SL(chip)	330P 50V J				01
	C309	**US135100**	Ceramic Capacitor-F (chip)	0.1000 16V Z				01
	C310	**US135100**	Ceramic Capacitor-F (chip)	0.1000 16V Z				01
	CF101	**XZ504A00**	CF Card	HB288032C5		CF CARD MEMORY		
	CN101	**LB933040**	Base Post Connector	VH 4P SE				01
	CN107	**VB390100**	Connector Base Post	PH 5P TE				01
*	CN108	**V6626700**	Connector, Card	MI21A-50PD-SF		CF CARD		
*	CN109	**VY940100**	Connector, FFC	52610 25P TE				
	CN110	**VB858200**	Connector Base Post	PH 3P SE				01
*	CN111	**VY940100**	Connector, FFC	52610 25P TE				
	CN112	**VB389900**	Connector Base Post	PH 3P TE				01
	CN113	**VT387400**	Connector, FFC	52610 30P TE				05
	CN114	**VT387400**	Connector, FFC	52610 30P TE				05
	CN115	**LB933020**	Base Post Connector	VH 2P SE				01
	CN116	**VY730000**	Connector Socket	17LE 9P SE				04
	CN117	**VB390500**	Connector Base Post	PH 9P TE				03
	CN118	**VT387400**	Connector, FFC	52610 30P TE				05
	CN119	**VT387400**	Connector, FFC	52610 30P TE				05
*	CN120	**V6592500**	Connector, FFC	FMN 36P SE				
*	CN121	**V6592500**	Connector, FFC	FMN 36P SE				
	CN122	**VT387400**	Connector, FFC	52610 30P TE				05
	CN123	**VT387400**	Connector, FFC	52610 30P TE				05
	CN124	**VB858100**	Connector Base Post	PH 2P SE				01
	CN301	**VB390000**	Connector Base Post	PH 4P TE				01
	CN501	**V4794000**	Connector, PC CARD	IC1 68P SE		MEMORY CARD		09
	CN502	**VT387400**	Connector, FFC	52610 30P TE				05
	CN503	**VT387400**	Connector, FFC	52610 30P TE				05
*	CN901	**V4805400**	Connector	KX14-50K5D1 50P TE				
*	CN902	**VY940100**	Connector, FFC	52610 25P TE				
*	CN903	**VY940100**	Connector, FFC	52610 25P TE				
	D101	**VT332900**	Diode	1SS355 TE-17				01
	-111	**VT332900**	Diode	1SS355 TE-17				01
	D301	**VT332900**	Diode	1SS355 TE-17				01
	D302	**VT332900**	Diode	1SS355 TE-17				01

*: New Parts

RANK: Japan only

	REF NO.	PART NO.	DESCRIPTION			REMARKS	QTY	RANK
	D304	**VT332900**	Diode	1SS355 TE-17				01
	EM101	**FZ006920**	LC Filter	LS MT B271KB				01
	-113	**FZ006920**	LC Filter	LS MT B271KB				01
*	IC103	**XY067A00**	IC	MAX793SCSE		SYSTEM RESET		
	IC104	**XW818A00**	IC	LT1117CST 1.25V		REGULATOR 1.25V		07
	IC105	**XY065A00**	IC	SH7709A		CPU		14
*	IC107	**XZ562A00**	IC	MBM29LV800BA-90PFT		FLASH ROM 8M		
*	IC108	**XY967A00**	IC	CY62256VLL-70SNC		SRAM 256K		
*	IC109	**XY967A00**	IC	CY62256VLL-70SNC		SRAM 256K		
*	IC110	**XY937A00**	IC	CY2305		CLOCK BUFFER		
*	IC111	**XZ561A00**	IC	TC59SM716AFT-80		SDRAM 128M		
*	IC112	**XZ561A00**	IC	TC59SM716AFT-80		SDRAM 128M		
*	IC113	**XZ479A00**	IC	EPM7032AETC44-10		FPGA		
	IC114	**XV833A00**	IC	MBCG46183-129		SIO4		06
	IC117	**XM332A00**	IC	TC74VHC04F EL		INVERTER		01
	IC119	**XT744A00**	IC	TC74VHCT245AFT		BUFFER		07
	IC120	**XU797A00**	IC	TC74VHC245FT		BUFFER		03
*	IC121	**XY945A00**	IC	TC74VHC32FT		OR		
*	IC122	**XY068A00**	IC	LM2664		REGULATOR		
	IC123	**XT744A00**	IC	TC74VHCT245AFT		BUFFER		07
	IC124	**XU815A00**	IC	DS26C32ATMX		LINE RECEIVER		06
	IC125	**XU073A00**	IC	SN75C1168NSR		LINE DRIVER/RECEIVER		05
	IC126	**XL334A00**	IC	MC26LS30DR2		LINE DRIVER		08
*	IC127	**XY907A00**	IC	TC74LVXC3245FS		TRANSCEIVER		
*	-131	**XY907A00**	IC	TC74LVXC3245FS		TRANSCEIVER		
*	IC132	**XY906A00**	IC	TPS2211IDBR		PCMCIA POWER INTERFACE SW		
	IC133	**XT777A00**	IC	TC74VHCT04AF		INVERTER		01
	IC134	**VR903700**	Photo Coupler	HCPL-M600				04
	IC135	**XM182A00**	IC	TC7S04F		INVERTER		01
	IC136	**XP351A00**	IC	TC7S32FU		OR		01
	IC137	**XU229A00**	IC	TC74LVX4245FS		TRANSCEIVER		04
	IC138	**XU229A00**	IC	TC74LVX4245FS		TRANSCEIVER		04
*	IC139	**XV892A00**	IC	TC74VHC74FT		D-FF		
	IC140	**XV932A00**	IC	MSM5118160D-60J		DRAM 16M		12
	IC141	**XV932A00**	IC	MSM5118160D-60J		DRAM 16M		12
	IC142	**XU073A00**	IC	SN75C1168NSR		LINE DRIVER/RECEIVER		05
	IC143	**XV988A00**	IC	YSS910-S		DSP6		10
	IC144	**XE737A00**	IC	SN75124N		LINE RECEIVER		05
*	IC145	**XY057A00**	IC	TC74VHCT126AFT		BUFFER		
*	IC146	**XY074A00**	IC	TC74VHC125FT		BUFFER		
	IC147	**XP351A00**	IC	TC7S32FU		OR		01
	IC148	**XM530A00**	IC	YM3437C-F		DIT2		07
	IC149	**XM530A00**	IC	YM3437C-F		DIT2		07
	IC150	**XW526A00**	IC	YSD917-ME2		DIR5		
	IC151	**XW526A00**	IC	YSD917-ME2		DIR5		
	IC152	**XP004A00**	IC	TC7W04FU		INVERTER		02
	IC153	**XV932A00**	IC	MSM5118160D-60J		DRAM 16M		12
	IC154	**XV932A00**	IC	MSM5118160D-60J		DRAM 16M		12
	IC155	**XU797A00**	IC	TC74VHC245FT		BUFFER		03
	IC156	**XU797A00**	IC	TC74VHC245FT		BUFFER		03
*	IC157	**XV893A00**	IC	TC74VHC139FT		DECODER		
*	IC158	**XY945A00**	IC	TC74VHC32FT		OR		
	IC159	**XV988A00**	IC	YSS910-S		DSP6		10
	IC160	**XQ968A00**	IC	TC74HC251AF		MULTIPLEXER		03
*	IC161	**XY059A00**	IC	TC74VHCT574AFT		D-FF		
*	IC162	**XY059A00**	IC	TC74VHCT574AFT		D-FF		
*	IC163	**XY938A00**	IC	TC74ACT174F		D-FF		
*	IC164	**XY938A00**	IC	TC74ACT174F		D-FF		
	IC165	**XG948E00**	IC	YM3436DK		DIR2		11
	IC166	**XT744A00**	IC	TC74VHCT245AFT		BUFFER		07
	-168	**XT744A00**	IC	TC74VHCT245AFT		BUFFER		07
*	IC169	**XV893A00**	IC	TC74VHC139FT		DECODER		
	IC170	**XU797A00**	IC	TC74VHC245FT		BUFFER		03
*	IC171	**XV893A00**	IC	TC74VHC139FT		DECODER		
	IC172	**XT744A00**	IC	TC74VHCT245AFT		BUFFER		07
	-174	**XT744A00**	IC	TC74VHCT245AFT		BUFFER		07
	IC175	**XU229A00**	IC	TC74LVX4245FS		TRANSCEIVER		04
	-178	**XU229A00**	IC	TC74LVX4245FS		TRANSCEIVER		04
	IC179	**XT744A00**	IC	TC74VHCT245AFT		BUFFER		07
	IC180	**XU797A00**	IC	TC74VHC245FT		BUFFER		03

*: New Parts

RANK: Japan only

	REF NO.	PART NO.	DESCRIPTION			REMARKS	QTY	RANK
	-184	**XU797A00**	IC	TC74VHC245FT		BUFFER		03
	IC301	**XV891A00**	IC	TC74VHC08FT		AND		01
*	IC302	**IS039300**	IC	HD74LV393AFPEL		COUNTER		
	J301	**- -**	Jumper Wire	0.55		(VA078900)		
	JK101	**VN997100**	DIN Connector	8P TCS7927		SERIAL 2		04
	JK102	**VN997100**	DIN Connector	8P TCS7927		SERIAL 1		04
	JK103	**VK519000**	DIN Connector	5P3 YKF51-50		MIDI IN/OUT		04
	JK104	**VS133800**	XLM Connector	NC3FAH1-0		DIGITAL(AES/EBU) IN 1		04
	JK105	**VS133800**	XLM Connector	NC3FAH1-0		DIGITAL(AES/EBU) IN 2		04
	JK106	**VS133700**	XLM Connector	NC3MAH		DIGITAL(AES/EBU) OUT 1		04
	JK107	**VS133700**	XLM Connector	NC3MAH		DIGITAL(AES/EBU) OUT 2		04
*	JK108	**V6415900**	BNC Connector	1P YKS11-0067		WORDCLOCK IN		
	K101	**VC719300**	Terminal Plate	P-424				01
	K103	**VB966900**	Style Pin	IMSA-6024 L=35				01
	K104	**VB966900**	Style Pin	IMSA-6024 L=35				01
	K111	**VT696400**	Holder, Cannon Connector	PRO R3				04
	K112	**VT696400**	Holder, Cannon Connector	PRO R3				04
	K113	**VS644300**	Support, PCB	Y1E20-00				03
	L101	**VS740100**	Chip Inductance	BLM21B751S 2125				03
	-104	**VS740100**	Chip Inductance	BLM21B751S 2125				03
	L105	**VV493200**	Noise Filter	ZJYS51R5-2PT				04
	-108	**VV493200**	Noise Filter	ZJYS51R5-2PT				04
	L109	**VP246100**	Pulse Transformer	P17H				07
	-112	**VP246100**	Pulse Transformer	P17H				07
	L113	**VQ193600**	Chip Solid Inductance	BLM21A121SPT				01
	L114	**VQ193600**	Chip Solid Inductance	BLM21A121SPT				01
	LD501	**V5295900**	LED	SLP-235B		MEMORY CARD		01
	R103	**RD255110**	Carbon Resistor (chip)	110.0 0.1 J				01
	R104	**RD254470**	Carbon Resistor (chip)	47.0 0.1 J				01
	R107	**RD356470**	Carbon Resistor (chip)	4.7K 63M J				01
	-114	**RD356470**	Carbon Resistor (chip)	4.7K 63M J				01
	R115	**RD354220**	Carbon Resistor (chip)	22 63M J				01
	R117	**RD354220**	Carbon Resistor (chip)	22 63M J				01
	R118	**RD354220**	Carbon Resistor (chip)	22 63M J				01
	R120	**RD356470**	Carbon Resistor (chip)	4.7K 63M J				01
	-122	**RD356470**	Carbon Resistor (chip)	4.7K 63M J				01
	R123	**RD357220**	Carbon Resistor (chip)	22K 63M J				01
	R124	**RD357220**	Carbon Resistor (chip)	22K 63M J				01
	R125	**RD356470**	Carbon Resistor (chip)	4.7K 63M J				01
	R126	**RD356470**	Carbon Resistor (chip)	4.7K 63M J				01
	R127	**RD356100**	Carbon Resistor (chip)	1.0K 63M J				01
	R128	**VC730400**	Metal Oxide Film Resistor	47.0 1W J				01
	R129	**RD357100**	Carbon Resistor (chip)	10K 63M J				01
	R130	**RD357100**	Carbon Resistor (chip)	10K 63M J				01
	R131	**RD356100**	Carbon Resistor (chip)	1.0K 63M J				01
	R132	**RD356100**	Carbon Resistor (chip)	1.0K 63M J				01
	R133	**RD255150**	Carbon Resistor (chip)	150.0 0.1 J				01
	R134	**RD254100**	Carbon Resistor (chip)	10.0 0.1 J				01
	R135	**RD254100**	Carbon Resistor (chip)	10.0 0.1 J				01
	R136	**VC731200**	Metal Oxide Film Resistor	100.0 1W J				01
	R137	**RD357100**	Carbon Resistor (chip)	10K 63M J				01
	R138	**RD357100**	Carbon Resistor (chip)	10K 63M J				01
	R139	**RD254100**	Carbon Resistor (chip)	10.0 0.1 J				01
	R140	**RD254100**	Carbon Resistor (chip)	10.0 0.1 J				01
	R141	**RD255470**	Carbon Resistor (chip)	470.0 0.1 J				01
	R142	**RD255470**	Carbon Resistor (chip)	470.0 0.1 J				01
	R143	**RD254100**	Carbon Resistor (chip)	10.0 0.1 J				01
	R144	**RD254100**	Carbon Resistor (chip)	10.0 0.1 J				01
	R145	**RD255470**	Carbon Resistor (chip)	470.0 0.1 J				01
	R146	**RD255470**	Carbon Resistor (chip)	470.0 0.1 J				01
	R147	**RD356470**	Carbon Resistor (chip)	4.7K 63M J				01
	R148	**RD255220**	Carbon Resistor (chip)	220.0 0.1 J				01
	-150	**RD255220**	Carbon Resistor (chip)	220.0 0.1 J				01
	R151	**RD353470**	Carbon Resistor (chip)	4.7 63M J				01
	R152	**RD354750**	Carbon Resistor (chip)	75 63M J				01
	R153	**RD254100**	Carbon Resistor (chip)	10.0 0.1 J				01
	R154	**RD254100**	Carbon Resistor (chip)	10.0 0.1 J				01
	R155	**RD255110**	Carbon Resistor (chip)	110.0 0.1 J				01
	R156	**RD255110**	Carbon Resistor (chip)	110.0 0.1 J				01
*	R157	**RD355300**	Carbon Resistor (chip)	300 63M J				

*: New Parts

RANK: Japan only

	REF NO.	PART NO.	DESCRIPTION			REMARKS	QTY	RANK
*	-161	**RD355300**	Carbon Resistor (chip)	300 63M J				
	R162	**RD357100**	Carbon Resistor (chip)	10K 63M J				01
	-165	**RD357100**	Carbon Resistor (chip)	10K 63M J				01
	R166	**RD354330**	Carbon Resistor (chip)	33 63M J				01
	-170	**RD354330**	Carbon Resistor (chip)	33 63M J				01
	R171	**RD355820**	Carbon Resistor (chip)	820 63M J				01
	R172	**RD355150**	Carbon Resistor (chip)	150 63M J				01
	R173	**RD354100**	Carbon Resistor (chip)	10 63M J				01
	R174	**RD257100**	Carbon Resistor (chip)	10.0K 0.1 J				01
	R175	**RD257100**	Carbon Resistor (chip)	10.0K 0.1 J				01
	R176	**RD256470**	Carbon Resistor (chip)	4.7K 0.1 J				01
	R177	**RD256470**	Carbon Resistor (chip)	4.7K 0.1 J				01
	R178	**RD357100**	Carbon Resistor (chip)	10K 63M J				01
	R179	**RD355470**	Carbon Resistor (chip)	470 63M J				01
	R301	**RD356470**	Carbon Resistor (chip)	4.7K 63M J				01
	R302	**RD356470**	Carbon Resistor (chip)	4.7K 63M J				01
	R303	**RD357100**	Carbon Resistor (chip)	10K 63M J				01
	R304	**RD356430**	Carbon Resistor (chip)	4.3K 63M J				01
	R305	**RD358100**	Carbon Resistor (chip)	100K 63M J				01
	R306	**RD358100**	Carbon Resistor (chip)	100K 63M J				01
	R307	**RD357100**	Carbon Resistor (chip)	10K 63M J				01
	R308	**RD356150**	Carbon Resistor (chip)	1.5K 63M J				01
	R309	**RD359100**	Carbon Resistor (chip)	1.0M 63M J				01
	R310	**RD357100**	Carbon Resistor (chip)	10K 63M J				01
	R311	**RD355330**	Carbon Resistor (chip)	330 63M J				01
	R312	**RD354100**	Carbon Resistor (chip)	10 63M J				01
	R313	**RD354100**	Carbon Resistor (chip)	10 63M J				01
	R314	**RD355100**	Carbon Resistor (chip)	100 63M J				01
	-318	**RD355100**	Carbon Resistor (chip)	100 63M J				01
	R319	**RD357100**	Carbon Resistor (chip)	10K 63M J				01
	R320	**RD357100**	Carbon Resistor (chip)	10K 63M J				01
	R321	**RD354680**	Carbon Resistor (chip)	68 63M J				01
	-328	**RD354680**	Carbon Resistor (chip)	68 63M J				01
	R329	**RD354330**	Carbon Resistor (chip)	33 63M J				01
	-335	**RD354330**	Carbon Resistor (chip)	33 63M J				01
	R336	**RD354680**	Carbon Resistor (chip)	68 63M J				01
	-341	**RD354680**	Carbon Resistor (chip)	68 63M J				01
	R343	**RD357100**	Carbon Resistor (chip)	10K 63M J				01
	RA101	**RE047100**	Resistor Array	10KX4				01
	-108	**RE047100**	Resistor Array	10KX4				01
	RA109	**RE046470**	Resistor Array	4.7KX4				01
	-111	**RE046470**	Resistor Array	4.7KX4				01
	RA112	**RE047100**	Resistor Array	10KX4				01
	-136	**RE047100**	Resistor Array	10KX4				01
	RA137	**RE046100**	Resistor Array	1KX4				01
	SW101	**VR044000**	Push Switch	SKQDAA		RESET		01
	TR101	**VU383400**	Transistor Array	UMX1N (NPN+NPN)				01
	TR102	**VU383400**	Transistor Array	UMX1N (NPN+NPN)				01
*	X102	**V6592600**	Quartz Crystal Unit	8.0MHz DSO751SV				
*	X103	**V6592700**	Quartz Crystal Unit	25.6MHz DSO751SB				
	X104	**VU800300**	Quartz Crystal Unit	60.0MHz DOC-49S2				07
*	X301	**V6592800**	Quartz Crystal Unit	6.144MHz DSO751SB				
		- -	Circuit Board	SUB		J,U,V (V587920)(XY899B0)		
		- -	Circuit Board	SUB		H,B,W (V668460)(XY899B0)		
*		**AAX20980**	Circuit Board	SUB 1/4		J,U,V (XY899B0)		
*		**AAX20990**	Circuit Board	SUB 1/4		H,B,W (XY899B0)		
*		**AAX21000**	Circuit Board	SUB 2/4		(XY899B0)		
*		**AAX21010**	Circuit Board	SUB 3/4		(XY899B0)		
*		**AAX21020**	Circuit Board	SUB 4/4		(XY899B0)		
		EG330290	Bind Head Screw	SP 3.0X8 MFZN2Y			4	01
		VP206500	Fuse Holder	EYF-52BC			10	01
		VH870600	LED Socket			POWER		01
	C701	**UR639470**	Electrolytic Cap.	4700 16.0V				02
	C702	**UR639470**	Electrolytic Cap.	4700 16.0V				02
	C703	**VR086500**	Electrolytic Cap.	3300 35.0V				03
	C704	**VR086500**	Electrolytic Cap.	3300 35.0V				03
	C705	**UR848220**	Electrolytic Cap.	220.00 25.0V				01
	-708	**UR848220**	Electrolytic Cap.	220.00 25.0V				01
	C709	**UR866100**	Electrolytic Cap.	1.00 50.0V				01

*: New Parts

RANK: Japan only

	REF NO.	PART NO.	DESCRIPTION			REMARKS	QTY	RANK
⚠	C801	**VY675000**	Capacitor	0.010 250V J.U.C.S				01
*	CN601	**V2363600**	Connector, FFC	FMN 36P TE				
*	CN602	**V2363600**	Connector, FFC	FMN 36P TE				
	CN603	**VB858300**	Connector Base Post	PH 4P SE				01
	CN604	**VB858600**	Connector Base Post	PH 7P SE				01
	CN605	**VU328200**	Plug	PHEC 100P TE		SLOT 2		05
	CN606	**VU328200**	Plug	PHEC 100P TE		SLOT 1		05
	CN701	**LB932040**	Base Post Connector	VH 4P TE				01
	CN702	**LB932040**	Base Post Connector	VH 4P TE				01
	CN703	**VB390200**	Connector Base Post	PH 6P TE				01
	CN704	**VB390100**	Connector Base Post	PH 5P TE				01
*	CN705	**VY914700**	Connector Assembly	7P 140mm B&C 2mm				
*	CN706	**VQ613000**	Connector Assembly	4P 450mm B&C 2mm				
	CN801	**VB858800**	Connector Base Post	PH 9P SE				01
	CN802	**VB389800**	Connector Base Post	PH 2P TE				01
	CN803	**LB932030**	Base Post Connector	VH 3P TE				01
	D601	**V5454500**	Diode	1FWJ43N				01
	D701	**VF195600**	Diode	11ES4 TA1				01
	-708	**VF195600**	Diode	11ES4 TA1				01
	D709	**VD631600**	Diode	1SS133,176,HSS104				01
	D710	**VD631600**	Diode	1SS133,176,HSS104				01
	DB701	**VQ379300**	Diode Stack	S1VB20 1.0A 200V				02
	DB702	**VQ379300**	Diode Stack	S1VB20 1.0A 200V				02
⚠	FZ701	**KB003570**	Fuse	2.00A JU		J,U,V		01
⚠	FZ702	**KB003530**	Fuse	1.00A 250V JU		J,U,V		01
⚠	-705	**KB003530**	Fuse	1.00A 250V JU		J,U,V		01
⚠	FZ701	**KB003040**	Fuse	1.00A S		H,B,W		01
⚠	-705	**KB003040**	Fuse	1.00A S		H,B,W		01
	IC701	**XK309A00**	IC	NJM7905FA		REGULATOR -5V		03
	IC702	**XJ607A00**	IC	NJM7805FA		REGULATOR +5V		02
	IC703	**XD854A00**	IC	NJM7915FA		REGULATOR -15V		03
	IC704	**XD853A00**	IC	NJM7815FA		REGULATOR +15V		03
*	K701	**VF336100**	Heat Sink					
*	-704	**VF336100**	Heat Sink					
	LD801	**VV195400**	LED	GL8EG22		INPUT SIGNAL CH1		
	LD802	**VV195400**	LED	GL8EG22		INPUT SIGNAL CH2		
	LD803	**VV195400**	LED	GL8EG22		INPUT SIGNAL CH3		
	LD804	**VV195400**	LED	GL8EG22		INPUT SIGNAL CH4		
	LD805	**VV195400**	LED	GL8EG22		OUTPUT SIGNAL CH1		
	LD806	**VV195400**	LED	GL8EG22		OUTPUT SIGNAL CH2		
	LD807	**VV195400**	LED	GL8EG22		OUTPUT SIGNAL CH3		
	LD808	**VV195400**	LED	GL8EG22		OUTPUT SIGNAL CH4		
	LD809	**VV195400**	LED	GL8EG22		FS LOCK 44.1K		
	LD810	**V5295900**	LED	SLP-235B		POWER		01
	LD811	**VD118700**	LED	GL8HD22		INPUT CLIP CH1		01
	LD812	**VD118700**	LED	GL8HD22		INPUT CLIP CH2		01
	LD813	**VD118700**	LED	GL8HD22		INPUT CLIP CH3		01
	LD814	**VD118700**	LED	GL8HD22		INPUT CLIP CH4		01
	LD815	**VD118700**	LED	GL8HD22		OUTPUT CLIP CH1		01
	LD816	**VD118700**	LED	GL8HD22		OUTPUT CLIP CH2		01
	LD817	**VD118700**	LED	GL8HD22		OUTPUT CLIP CH3		01
	LD818	**VD118700**	LED	GL8HD22		OUTPUT CLIP CH4		01
	LD819	**VV195400**	LED	GL8EG22		FS LOCK 48K		
⚠ *	SW801	**V7256400**	Push Switch	SDDLB1		POWER ON/OFF		
⚠ *		**V6513400**	Power Supply Unit	YSW01-U		J,U,V		
⚠ *		**V6513500**	Power Supply Unit	YSW01-H		H,B,W		
⚠ *		**XY916A00**	Power Transformer			J		
⚠ *		**XY917A00**	Power Transformer	UL CSA		U,V		
⚠ *		**XY918A00**	Power Transformer	CEE		H,B,W		
		V5789100	DC Fan Motor	DC KDE1208PTS3-6				09
		V3125300	Fan	MMS-06E12DL				08
⚠		**V5065200**	AC Inlet	M1908-C 3P				03
*		**V6700100**	CD-ROM Drive	SR242S		CD-ROM		

*: New Parts

RANK: Japan only

REMOTE CONTROLLER

RC-SREV1

SERVICE MANUAL

■ **CONTENTS**

This document is printed on chlorine free (ECF) paper with soy ink.

PA 011555 2/2
20001225-150000

YAMAHA
HAMAMATSU, JAPAN
Printed in Japan '01.02

IMPORTANT NOTICE

This manual has been provided for the use of authorized Yamaha Retailers and their service personnel. It has been assumed that basic service procedures inherent to the industry, and more specifically Yamaha Products, are already known and understood by the users, and have therefore not been restated.

WARNING: Failure to follow appropriate service and safety procedures when servicing this product may result in personal injury, destruction of expensive components and failure of the product to perform as specified. For these reasons, we advise all Yamaha product owners that all service required should be performed by an authorized Yamaha Retailer or the appointed service representative.

IMPORTANT: This presentation or sale of this manual to any individual or firm does not constitute authorization, certification, recognition of any applicable technical capabilities, or establish a principal-agent relationship of any form.

The data provided is belived to be accurate and applicable to the unit(s) indicated on the cover. The research engineering, and service departments of Yamaha are continually striving to improve Yamaha products. Modifications are, therefore, inevitable and changes in specification are subject to change without notice or obligation to retrofit. Should any discrepancy appear to exist, please contact the distributor's Service Division.

WARNING: Static discharges can destroy expensive components. Discharge any static electricity your body may have accumulated by grounding yourself to the ground bus in the unit (heavy gauge black wires connect to this bus).

IMPORTANT: Turn the unit OFF during disassembly and parts replacement. Recheck all work before you apply power to the unit.

WARNING: CHEMICAL CONTENT NOTICE!

The solder used in the production of this product contains LEAD. In addition, other electrical/electronic and/or plastic (where applicable) components may also contain traces of chemicals found by the California Health and Welfare Agency (and possibly other entities) to cause cancer and/or birth defects or other reproductive harm.

DO NOT PLACE SOLDER, ELECTRICAL/ELECTRONIC OR PLASTIC COMPONENTS IN YOUR MOUTH FOR ANY REASON WHAT SO EVER!

Avoid prolonged, unprotected contact between solder and your skin! When soldering, do not inhale solder fumes or expose eyes to solder/flux vapor!

If you come in contact with solder or components located inside the enclosure of this product, wash your hands before handling food.

■ WARNING

Components having special characteristics are marked ⚠ and must be replaced with parts having specification equal to those originally installed.

■ SPECIFICATIONS

Display		320 x 240 dot graphical LCD with fluorescent backlight and contrast and brightness controls
Controls	**Control Surface**	Data wheel
		60 mm motorized fader x4
	Rear Panel	BRIGHT, CONT
Buttons	**Control Surface**	BYPASS, PROGRAM, PARAMETER MAIN, PARAMETER FINE, UTILITY, –1/DEC, +1/INC, CURSOR (◄/►/▲/▼), ENTER
	Rear Panel	POWER switch
Indicators		BYPASS, INPUT CLIP x4, OUTPUT CLIP x4
Power requirements		12 V DC
Power consumption		7.2 W
Dimensions (W x H x D)		206 x 66.3 x 276.7 mm (8.1 x 2.6 x 10.9 inches)
Weight		2.05 kg (4.51 lbs)
Free-air operating temperature		0˚ C to 45˚ C (32˚ F to 113˚ F)
Supplied accessories		20 meter remote cable
Options		AC adapter (Yamaha PA-6)

Control I/O

Connection	Format	Level	Connector
REMOTE	—	RS-422	9-pin D-sub (female)
DC 12V IN	—	12 V DC	2.1 mm mini power type

Remote Cable Wiring Diagram

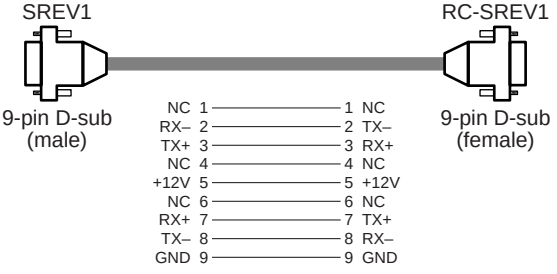

■ PANEL LAYOUT

● Top Panel

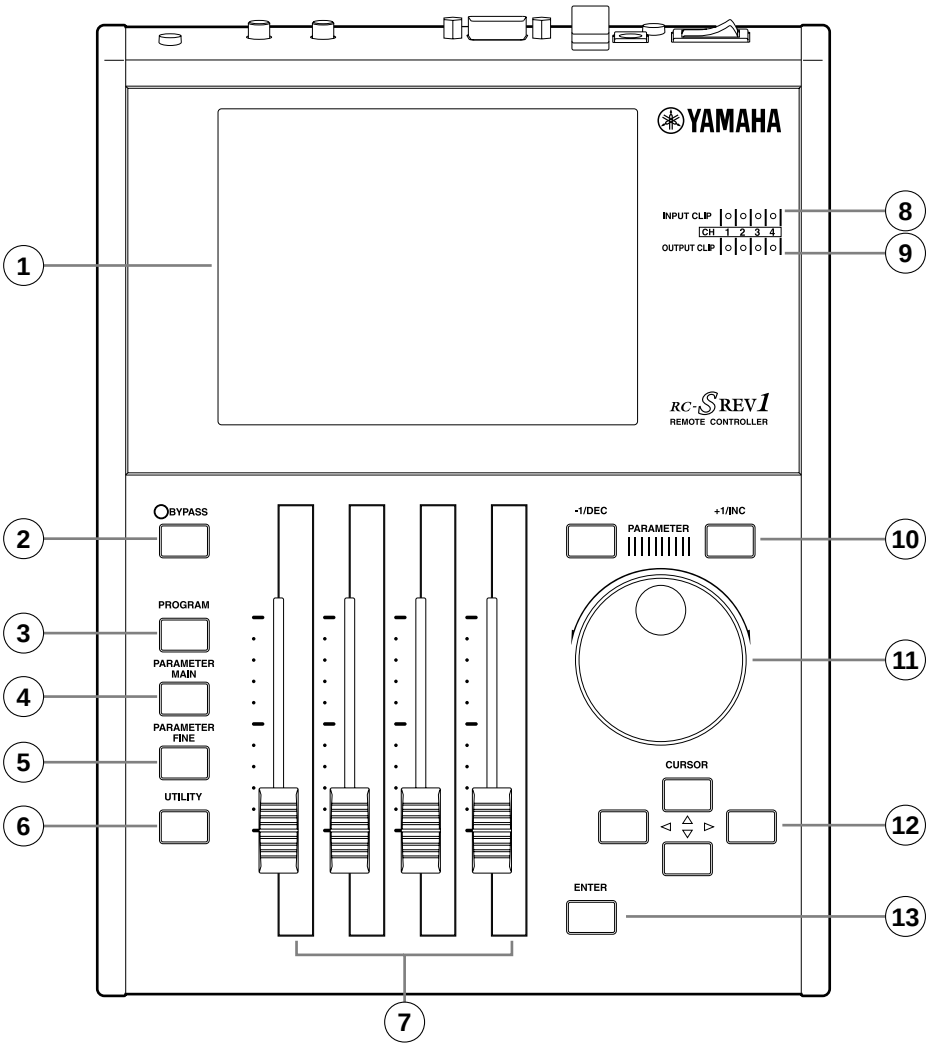

① Display
② BYPASS button & indicator
③ PROGRAM button
④ PARAMETER MAIN button
⑤ PARAMETER FINE button
⑥ UTILITY button
⑦ Motorized faders
⑧ INPUT CLIP indicators
⑨ OUTPUT CLIP indicators
⑩ –1/DEC & +1/INC buttons
⑪ DATA wheel
⑫ Cursor buttons (◄/►/▲/▼)
⑬ ENTER button

Rear Panel

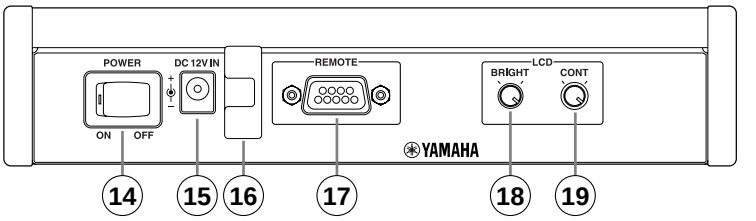

⑭ POWER switch
⑮ DC 12V IN connector
⑯ Adapter cable clip
⑰ REMOTE port
⑱ BRIGHT control
⑲ CONT control

Display

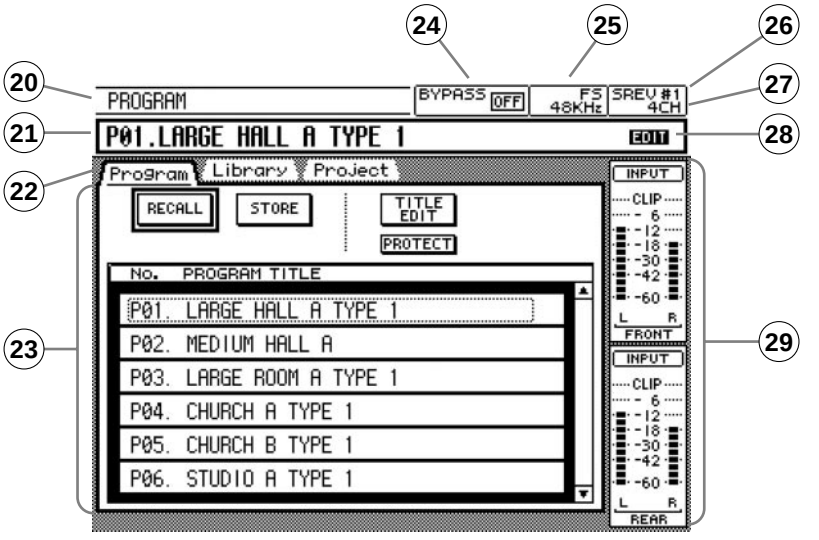

⑳ Page title
㉑ Program number & title
㉒ Page tabs
㉓ Main page area
㉔ Bypass status
㉕ FS status
㉖ Selected SREV1
㉗ Reverb mode
㉘ Edit status
㉙ Meters

■ BLOCK DIAGRAM

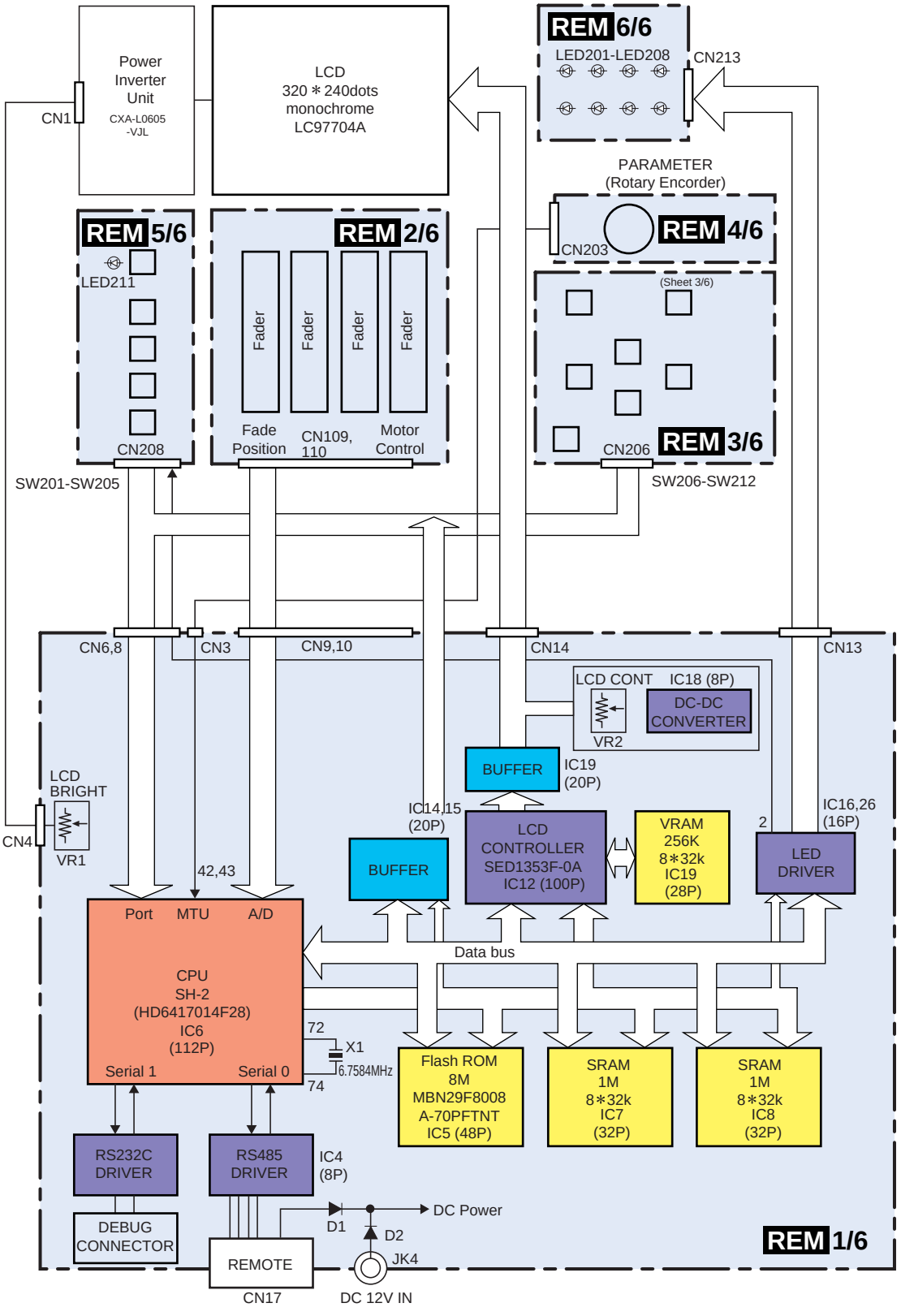

38CA1-8817998

■ DIMENSIONS

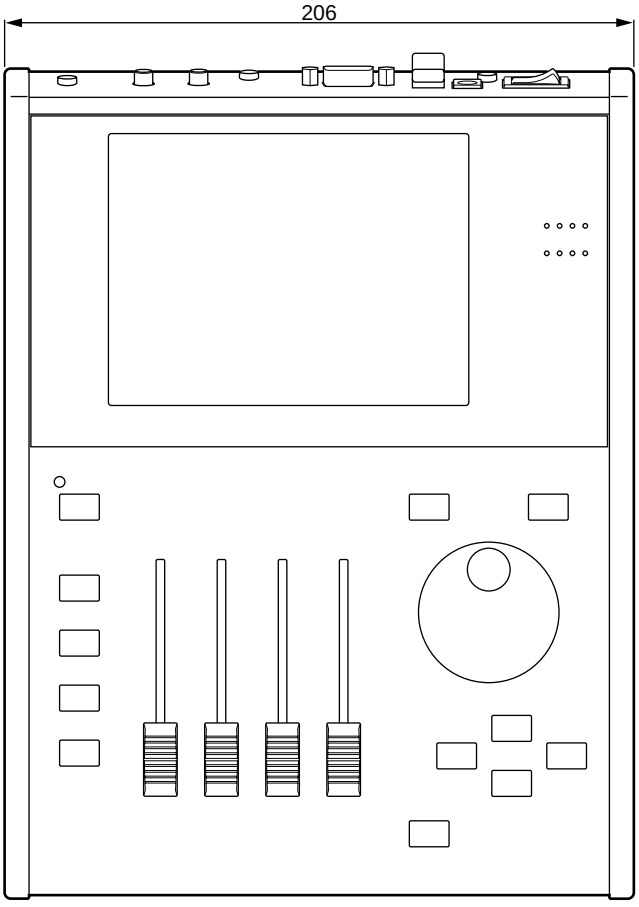

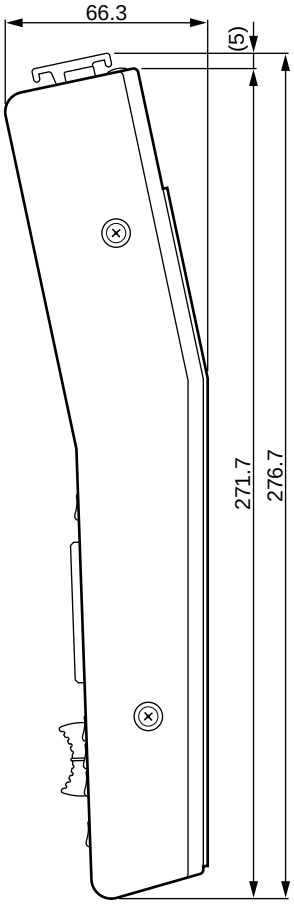

Unit: mm

■ CIRCUIT BOARD LAYOUT

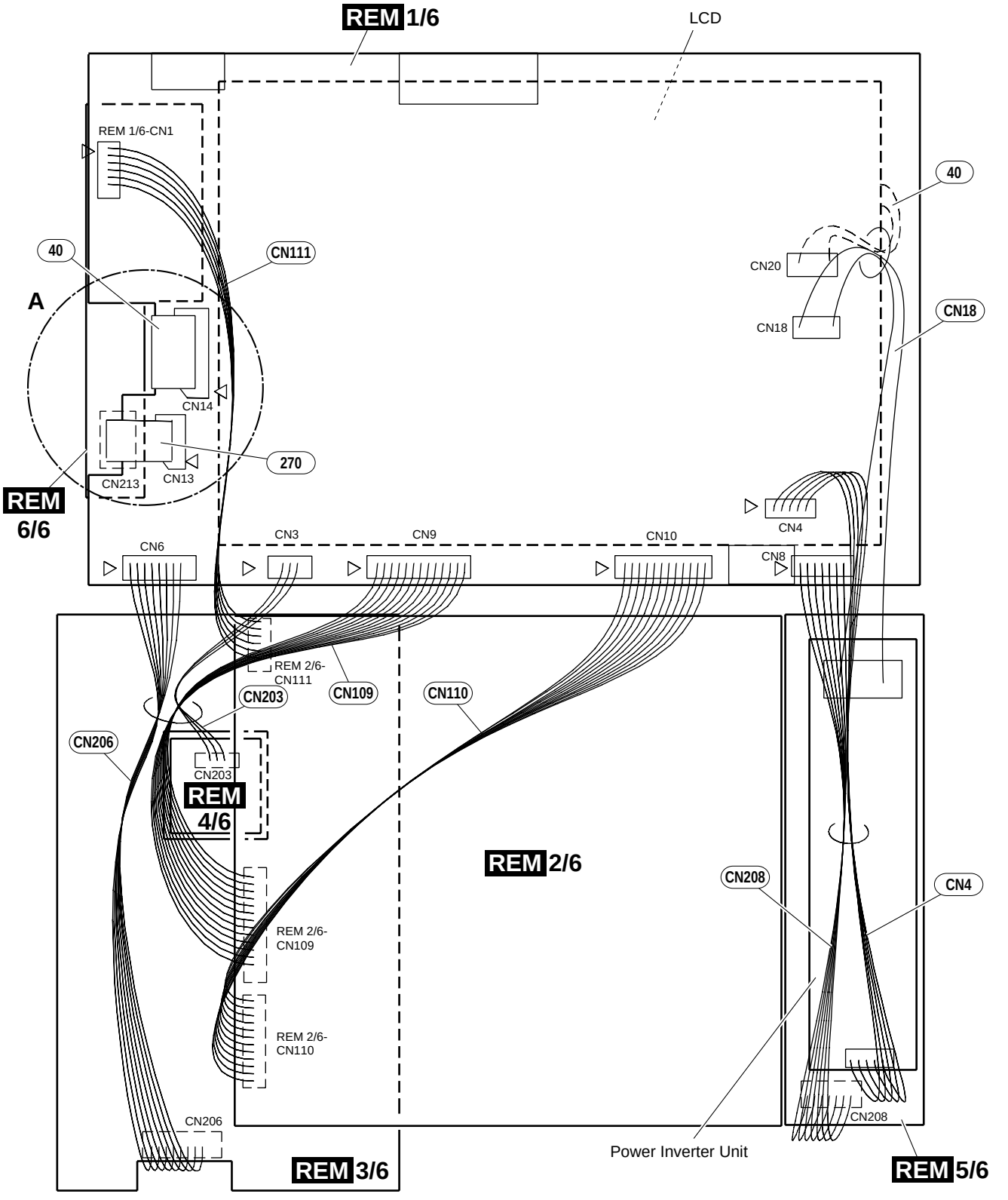

3NC2-V652850 ⚠2

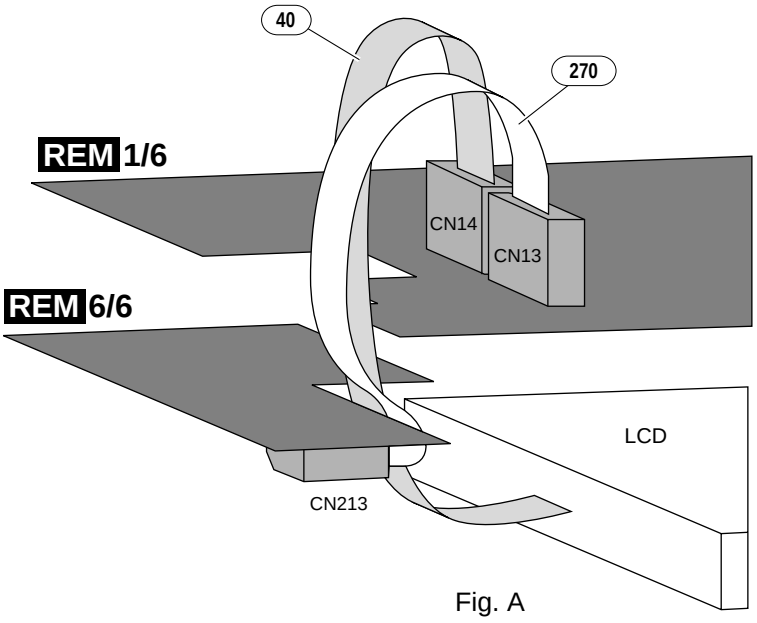

Fig. A

Location	Part No.	Connector Assembly	Destination		Remarks
40	V5605200	FFC	LCD	REM 1/6-CN14	12P
	(LCD)	XH	LCD	REM 1/6-CN20	2P
270	MF109100	FFC	REM 6/6-CN213	REM 1/6-CN13	9P
CN4	(V700120)	SAN&51021	REM 1/6-CN4	Power Inverter Unit	5P
CN18	(V700110)	SAN&BH	REM 1/6-CN18	Power Inverter Unit	2P
CN109	(V684060)	SAN&PH	REM 2/6-CN109	REM 1/6-CN9	13P
CN110	(V684140)	SAN&PH	REM 2/6-CN110	REM 1/6-CN10	12P
CN111	(V652810)	SAN&PH	REM 2/6-CN111	REM 1/6-CN11	6P
CN203	(VM85710)	SAN&PH	REM 4/6-CN203	REM 1/6-CN3	3P
CN206	(VP91350)	SAN&PH	REM 3/6-CN206	REM 1/6-CN6	8P
CN208	(VY91480)	SAN&PH	REM 5/6-CN208	REM 1/6-CN8	7P

■ DISASSEMBLY PROCEDURE

1. Side Pad (L), Side Pad (R)

(Time required: about 3 minutes)

1-1 Remove the two (2) screws marked [330]. The left side pad can then be removed. (Fig. 1)

1-2 Remove the two (2) screws marked [350]. The right side pad can then be removed. (Fig. 1)

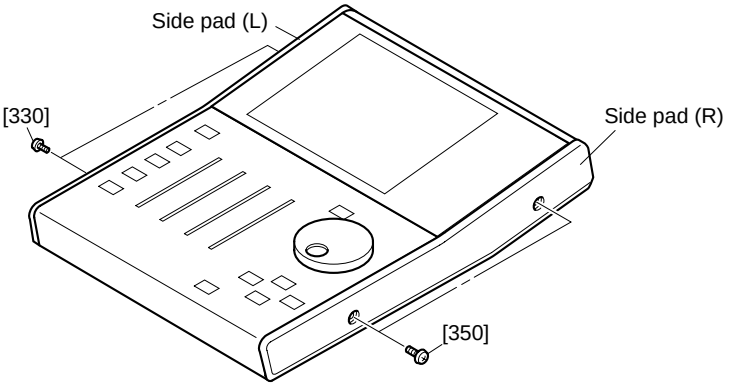

[330]: Bind Head Tapping Screw-B SP 3.0X10 MFZN2BL (VH741100) [350]: Bind Head Tapping Screw-B SP 3.0X10 MFZN2BL (VH741100)

Fig. 1

2. Bottom Cover (Time required: about 5 minutes)

2-1 Remove the left and right side pads. (See procedure 1.)

2-2 Remove the ten (10) screws marked [310]. The bottom cover can then be removed. (Fig. 2, 3, 4)

3. REM 1/6 Circuit Board, Power Inverter Unit

3-1 Remove the left and right side pads. (See procedure 1.)

3-2 Remove the bottom cover. (See procedure 2.)

3-3 REM 1/6 Circuit Board **(Time required: about 10 minutes)**
Remove the two (2) jack sockets marked [170], the screw marked [180], the screw marked [190] and the two (2) screws marked [200]. The REM 1/6 circuit board can then be removed. (Fig. 4, 5)

3-4 Power Inverter Unit **(Time required: about 8 minutes)**
Remove the two (2) screws marked [220]. The power inverter unit can then be removed. (Fig. 5)

<Left Side View>

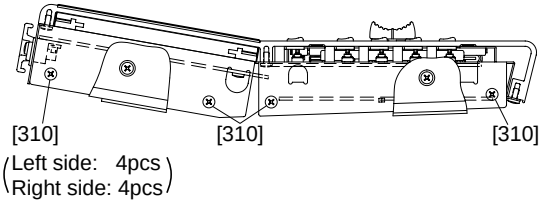

[310]: Bind Head Tapping Screw-B 3.0X8 MFZN2BL (EP600190)

Fig. 2

<Bottom View>

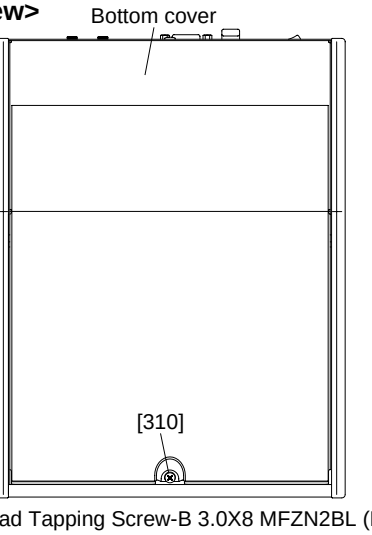

[310]: Bind Head Tapping Screw-B 3.0X8 MFZN2BL (EP600190)

Fig. 3

4. REM 6/6 Circuit Board

(Time required: about 10 minutes)

4-1 Remove the left and right side pads. (See procedure 1.)

4-2 Remove the bottom cover. (See procedure 2.)

4-3 Remove the REM 1/6 circuit board. (See procedure 3-3.)

4-4 Remove the two (2) screws marked [70]. The REM 6/6 circuit board can then be removed. (Fig. 5)

<Rear View>

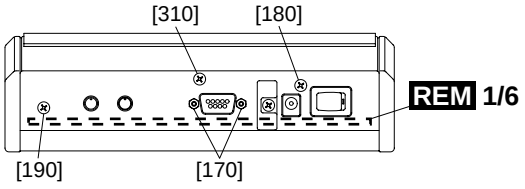

[180]: Bind Head Tapping Screw-B 3.0X6 MFZN2BL (EP600230)
[190]: Bind Head Screw 3.0X8 MFZN2BL (VB659000)
[310]: Bind Head Tapping Screw-B 3.0X8 MFZN2BL (EP600190)

Fig. 4

<Bottom View>

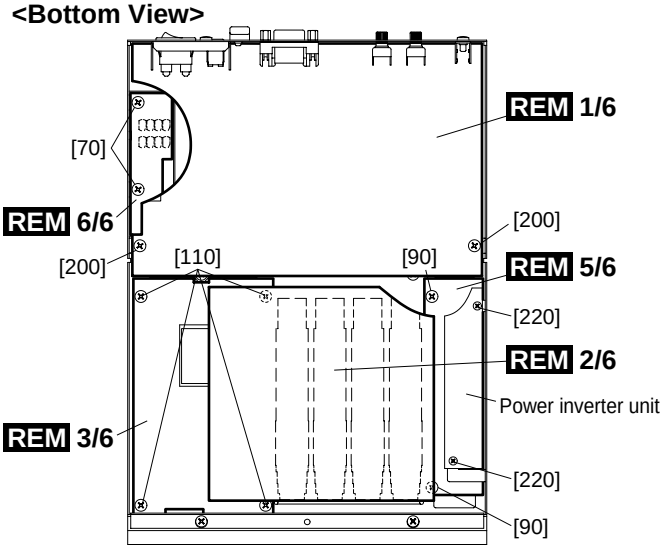

[70]: Bind Head Tapping Screw-B 3.0X6 MFZN2BL (EP600230)
[90]: Bind Head Tapping Screw-B 3.0X6 MFZN2BL (EP600230)
[110]: Bind Head Tapping Screw-B 3.0X6 MFZN2BL (EP600230)
[200]: Bind Head Tapping Screw-B 3.0X6 MFZN2BL (EP600230)
[220]: Bind Head Screw 2.0X3 MFZN2Y (VQ717600)

Fig. 5

5. Top Panel (Time required: about 15 minutes)

5-1 Remove the left and right side pads. (See procedure 1.)

5-2 Remove the bottom cover. (See procedure 2.)

5-3 Remove the REM 1/6 circuit board. (See procedure 3-3.)

5-4 Pull out the four fader knobs from the control panel side.

5-5 Remove the seven (7) screws marked [150]. The top panel can then be removed. (Fig. 6)

6. REM 2/6 Circuit Board

(Time required: about 20 minutes)

6-1 Remove the left and right side pads. (See procedure 1.)

6-2 Remove the bottom cover. (See procedure 2.)

6-3 Remove the REM 1/6 circuit board. (See procedure 3-3.)

6-4 Remove the top panel. (See procedure 5.)

6-5 Remove the eight (8) screws marked [140]. The REM2/6 circuit board can then be removed. (Fig. 5, 6)

7. REM 3/6 Circuit Board, REM 4/6 Circuit Board

(Time required: about 20 minutes)

7-1 Remove the left and right side pads. (See procedure 1.)

7-2 Remove the bottom cover. (See procedure 2.)

7-3 Remove the REM 1/6 circuit board. (See procedure 3-3.)
7-4 Remove the top panel. (See procedure 5.)
7-5 Remove the REM 2/6 circuit board. (See procedure 6.)
7-6 REM 3/6 Circuit Board
Remove the four (4) screws marked [110]. The REM 3/6 circuit board can then be removed. (Fig. 5)
7-7 REM 4/6 Circuit Board
Pull out the knob wheel from the control panel side. (Fig. 6)
Remove the hexagonal nut marked [130]. The REM 4/6 circuit board can then be removed. (Fig. 6)

8. REM 5/6 Circuit Board
(Time required: about 20 minutes)

8-1 Remove the left and right side pads. (See procedure 1.)
8-2 Remove the bottom cover. (See procedure 2.)
8-3 Remove the REM 1/6 circuit board. (See procedure 3-3.)
8-4 Remove the power inverter unit. (See procedure 3-4.)
8-5 Remove the top panel. (See procedure 5.)
8-6 Remove the REM 2/6 circuit board (See procedure 6.)
8-7 Remove the two (2) screws marked [90]. The REM 5/6 circuit board can then be removed. (Fig. 5)

9 LCD (Time required: about 15 minutes)

9-1 Remove the left and right side pads. (See procedure 1.)
9-2 Remove the bottom cover. (See procedure 2.)
9-3 Remove the REM 1/6 circuit board. (See procedure 3-3.)
9-4 Remove the top panel. (See procedure 5.)
9-5 Remove the four (4) screws marked [50]. The LCD can then be removed. (Fig. 6)

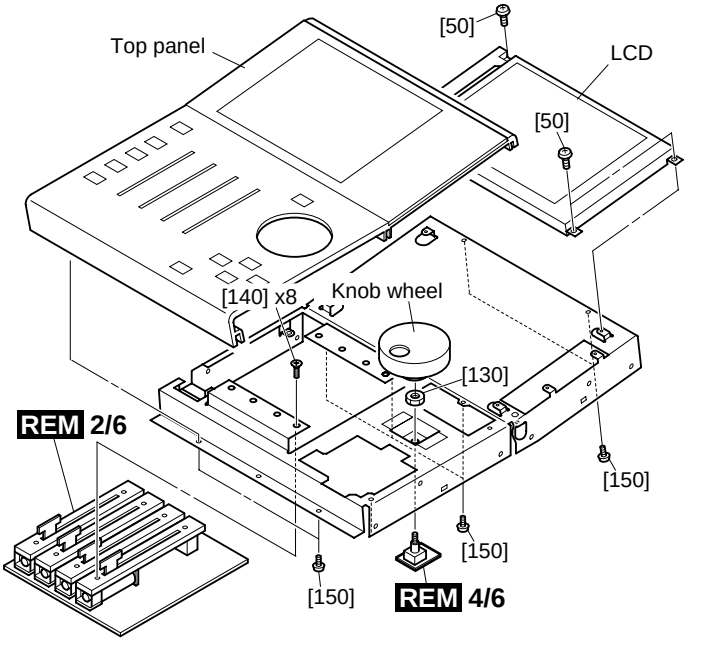

[50]: Bind Head Screw 2.6X6 MFZN2BL (EG320220)
[140]: Flat Head Screw 3.0X4 MFZN2Y (VD016900)
[150]: Bind Head Tapping Screw-B 3.0X8 MFZN2BL (EP600190)

Fig. 6

■ LSI PIN DESCRIPTION

● HD6417014F28 (XU147A00) CPU

REM: IC6

PIN NO.	NAME	I/O	FUNCTION	PIN NO.	NAME	I/O	FUNCTION
1	PE14	O	Port E	57	D11	I/O	Data bus
2	PE15	O	Port E	58	D10	I/O	
3	VSS	I	Ground	59	D9	I/O	
4	A0	O	Address bus	60	D8	I/O	
5	A1	O		61	VSS	I	Ground
6	A2	O		62	D7	I/O	Data bus
7	A3	O		63	D6	I/O	
8	A4	O		64	D5	I/O	
9	A5	O		65	VCC	I	Power supply
10	A6	O		66	D4	I/O	Data bus
11	A7	O		67	D3	I/O	
12	A8	O		68	D2	I/O	
13	A9	O		69	D1	I/O	
14	A10	O		70	D0	I/O	
15	A11	O		71	VSS	I	Ground
16	A12	O		72	XTAL	I	Crystal oscillator
17	A13	O		73	MD3	I	Mode control
18	A14	O		74	EXTAL	I	Crystal oscillator
19	A15	O		75	MD2	I	Mode control
20	A16	O		76	NMI	I	Non-maskable interrupt request
21	VCC	I	Power supply	77	VCC	I	Power supply
22	A17	O	Address bus	78	MD1	I	Mode control
23	VSS	I	Ground	79	MD0	I	Mode control
24	/RAS	O	Row address strobe	80	PLLVCC	I	PLL Power supply
25	/CASL	O	Column address strobe (low)	81	PLLCAP	I	PLL capacitor
26	/CASH	O	Column address strobe (high)	82	PLLVSS	I	PLL Ground
27	VSS	O	Ground	83	PA15 / CK	O	Port A / Clock
28	RDWR / PB5	O	DRAM read/write / Port B	84	/RES	I	Reset
29	A18	O	Address bus	85	PE0	I	Port E
30	A19	O		86	PE1	I	
31	A20	O		87	PE2	I	
32	PB9 /A21	O	Port B / Address bus	88	PE3	I	
33	VSS	I	Ground	89	PE4	I	
34	/RD	O	Read	90	VSS	I	Ground
35	/WDTOVF	O	Watch dog timer overflow	91	AN0 / PF0	I	Analog input / Port F
36	/WRH	O	High write	92	AN1 / PF1	I	
37	VCC	I	Power supply	93	AN2 / PF2	I	
38	/WRL	O	Low write	94	AN3 / PF3	I	
39	VSS	I	Ground	95	AN4 / PF4	I	
40	/CS1	O	Chip select	96	AN5 / PF5	I	
41	/CS0	O	Chip select	97	AVSS	I	Analog ground
42	PA9 / TCLKD	O	Port A / Timer clock	98	AN6 / PF6	I	Analog input / Port F
43	/IRQ2 / TCLKC	I	Interrupt request / Timer clock	99	AN7 / PF7	I	Analog input / Port F
44	/CS3	O	Chip select	100	AVCC	I	Power supply
45	/CS2	O	Chip select	101	VSS	I	Ground
46	/IRQ1	I	Interrupt request	102	PE5	O	Port E
47	TXD	O	Data transmission	103	VCC	I	Power supply
48	RXD	I	Data reception	104	PE6	O	Port E
49	/IRQ0	I	Interrupt request	105	PE7	O	
50	PA1 / TXD0	O	Port A / Data transmission	106	PE8	O	
51	PA0 / RXD0	I	Port A / Data reception	107	PE9	O	
52	D15	I/O	Data bus	108	PE10	O	
53	D14	I/O		109	VSS	I	Ground
54	D13	I/O		110	PE11	O	Port E
55	VSS	I	Ground	111	PE12	O	
56	D12	I/O	Data bus	112	PE13	O	

● SED1353F-0A (XY766A00) LCD CONTROLLER

REM: IC12

PIN NO.	NAME	I/O	FUNCTION	PIN NO.	NAME	I/O	FUNCTION
1	DB7	I/O	Data bus	51	VD7	I/O	VRAM data bus
2	Vss		Ground	52	Vss		Ground
3	VDD		Power supply	53	VDD		Power supply
4	DB8	I/O		54	VD8	I/O	
5	DB9	I/O		55	VD9	I/O	
6	DB10	I/O		56	VD10	I/O	
7	DB11	I/O		57	VD11	I/O	
8	DB12	I/O	Data bus	58	VD12	I/O	VRAM data bus
9	DB13	I/O		59	VD13	I/O	
10	DB14	I/O		60	VD14	I/O	
11	DB15	I/O		61	VD15	I/O	
12	AB0	I	UDS# column address strobe	62	VA11	O	
13	AB1	I		63	VA12	O	
14	AB2	I		64	VA13	O	VRAM address bus
15	AB3	I		65	VA14	O	
16	AB4	I		66	VA15	O	
17	AB5	I		67	VWE#	O	
18	AB6	I		68	VCS0#	O	Chip select
19	AB7	I		69	VCS1#	O	Chip select
20	AB8	I		70	UD3	O	
21	AB9	I		71	UD2	O	Data bus
22	AB10	I	Address bus	72	UD1	O	
23	AB11	I		73	UD0	O	
24	AB12	I		74	LD3	O	
25	AB13	I		75	LD2	O	Data bus
26	AB14	I		76	LD1	O	
27	AB15	I		77	LD0	O	
28	AB16	I		78	YD	O	Scan start signal
29	AB17	I		79	LP	O	X driver latch puls
30	AB18	I		80	WF/XSCL2	O	
31	AB19	I		81	XSCL	O	Data bus shift clock
32	RESET	I	Reset	82	LCDENB	O	
33	VA0	O		83	VOE#	O	
34	VA1	O		84	IOCS#	I	
35	VA2	O		85	IOW#	I	Write enable
36	VA3	O		86	IOR#	I	Read enable
37	VA4	O		87	MEMCS#	I	
38	VA5	O	VRAM address bus	88	MEMW#	I	Memory write
39	VA6	O		89	MEMR#	I	Memory read
40	VA7	O		90	READY	O	Ready
41	VA8	O		91	BHE#	I	LDS# row address strobe
42	VA9	O		92	OSC1	I	Clock
43	VA10	O		93	OSC2	O	Clock
44	VD0	I/O		94	DB0	I/O	
45	VD1	I/O		95	DB1	I/O	
46	VD2	I/O		96	DB2	I/O	
47	VD3	I/O	VRAM data bus	97	DB3	I/O	Data bus
48	VD4	I/O		98	DB4	I/O	
49	VD5	I/O		99	DB5	I/O	
50	VD6	I/O		100	DB6	I/O	

■ IC BLOCK DIAGRAM

- **MM74HC14SJX** (XW104A00)
  Hex Inverter
  REM: IC2

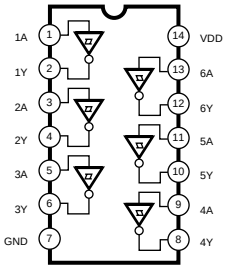

- **MM74HC74ASJX** (XY153A00)
  Dual D-Type Flip-Flop
  REM: IC23

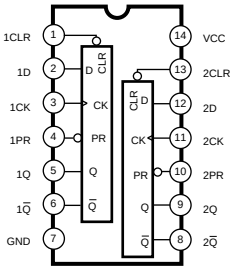

INPUTS				OUTPUTS	
PR	CLR	CLK	D	Q	Q
L	H	X	X	H	L
H	L	X	X	L	H
L	L	X	X	H	H
H	H	f	H	H	L
H	H	f	L	L	H
H	H	L	X	Q o	Q o

- **MM74HC138SJX** (XY353A00)
  3 to 8 Demultiplexer
  REM: IC10, 11

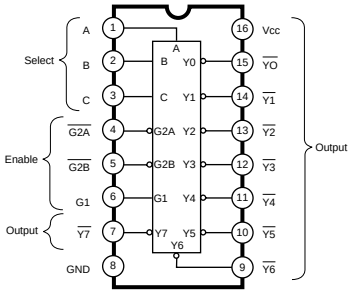

- **TC74ACT174F** (XY938A00)
  Hex D-Type Flip-Flop
  REM: IC16, 26

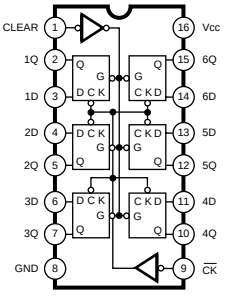

- **MM74HC245ASJX** (XW107A00)
  Octal 3-State Bus Transceiver
  REM: IC19

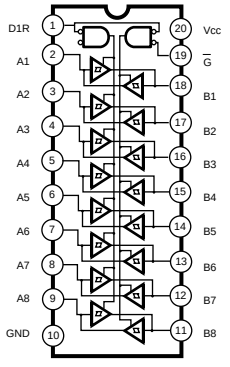

- **TC74AC273F** (XR281A00)
  Octal D-Type Flir Flop
  REM: IC14, 15

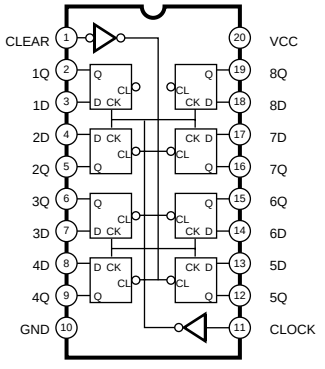

- **SN75179BPSR** (XT619A00)
  Line DRIVER
  REM: IC4

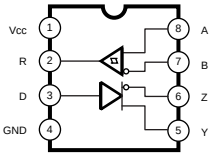

Driver

INPUTS D	OUTPUTS Y	Z
H	H	L
L	L	H

Receiver

DIFFERENTIAL INPUT A-B	OUTPUTS R
$V_{ID} \geq 0.2V$	H
$-0.2V < V_{ID} < 0.2V$	?
$V_{ID} \leq -0.2V$	L

H: "H" Level
L: "L" Level
?: incertitude

- **TA7291S** (XF557A00)
  Motor Driver DRIVER
  REM: IC101–104

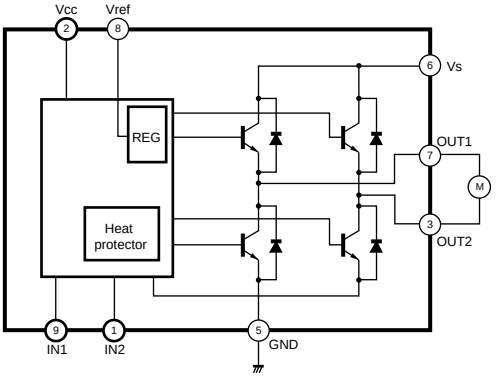

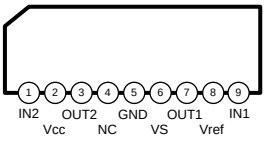

- **CE-3101-T** (XW701A00)
  DC-DC Converter
  REM: IC18

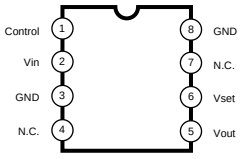

■ CIRCUIT BOARDS

Note: See parts list for details of circuit board component parts.

● REM 4/6 Circuit Board

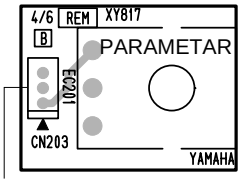

to REM 1/6-CN3

Component side

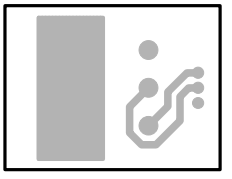

Pattern side

● REM 5/6 Circuit Board

to REM 1/6-CN8

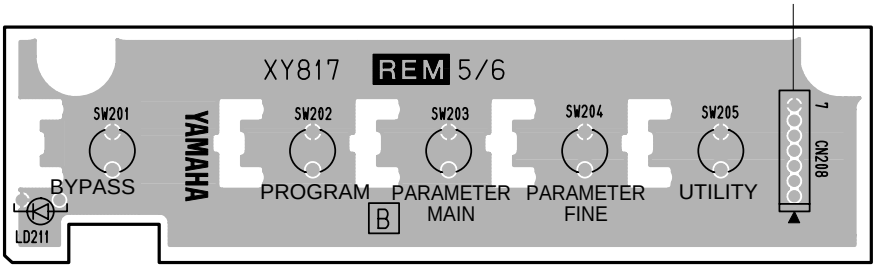

Component side

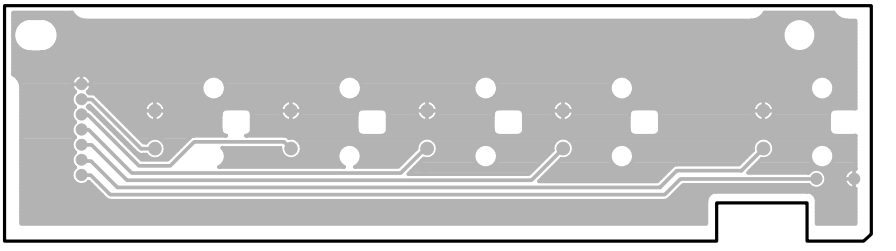

Pattern side

● REM 6/6 Circuit Board

to REM 1/6-CN13

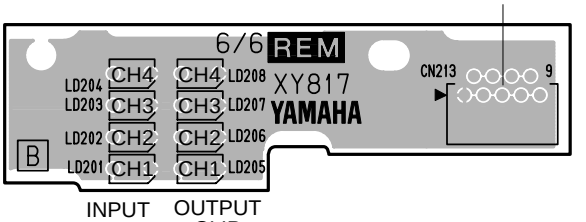

Component side

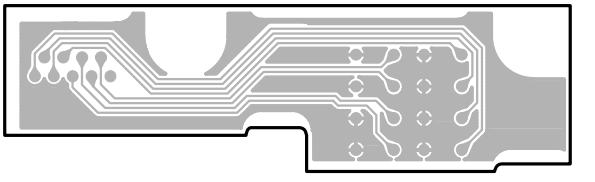

Pattern side

3NA-V582610-2 ⚠3
3NA-V582610-3 ⚠4

● REM 1/6 Circuit Board

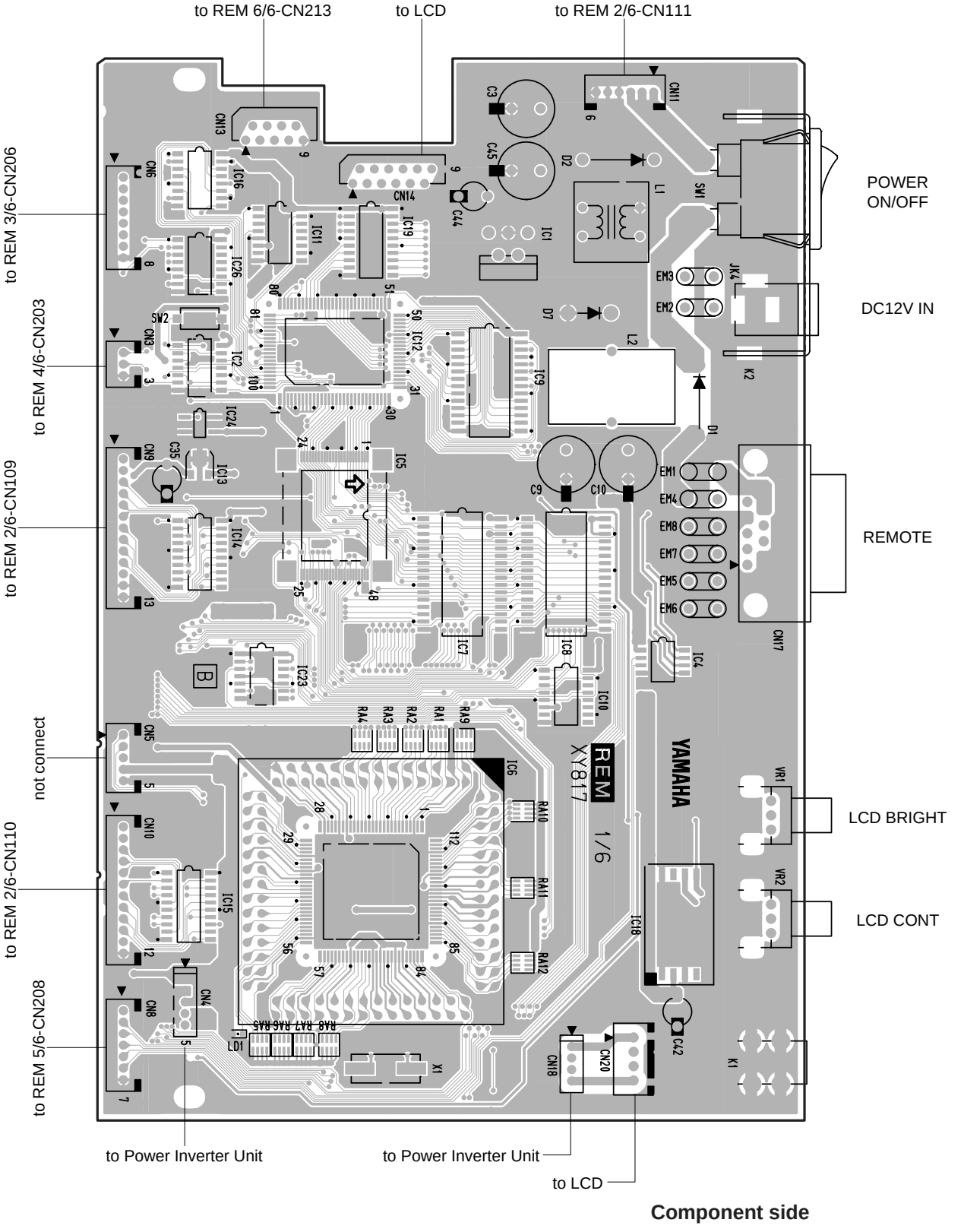

Component side

3NA-V582610-2 ⚠3

- REM 1/6 Circuit Board

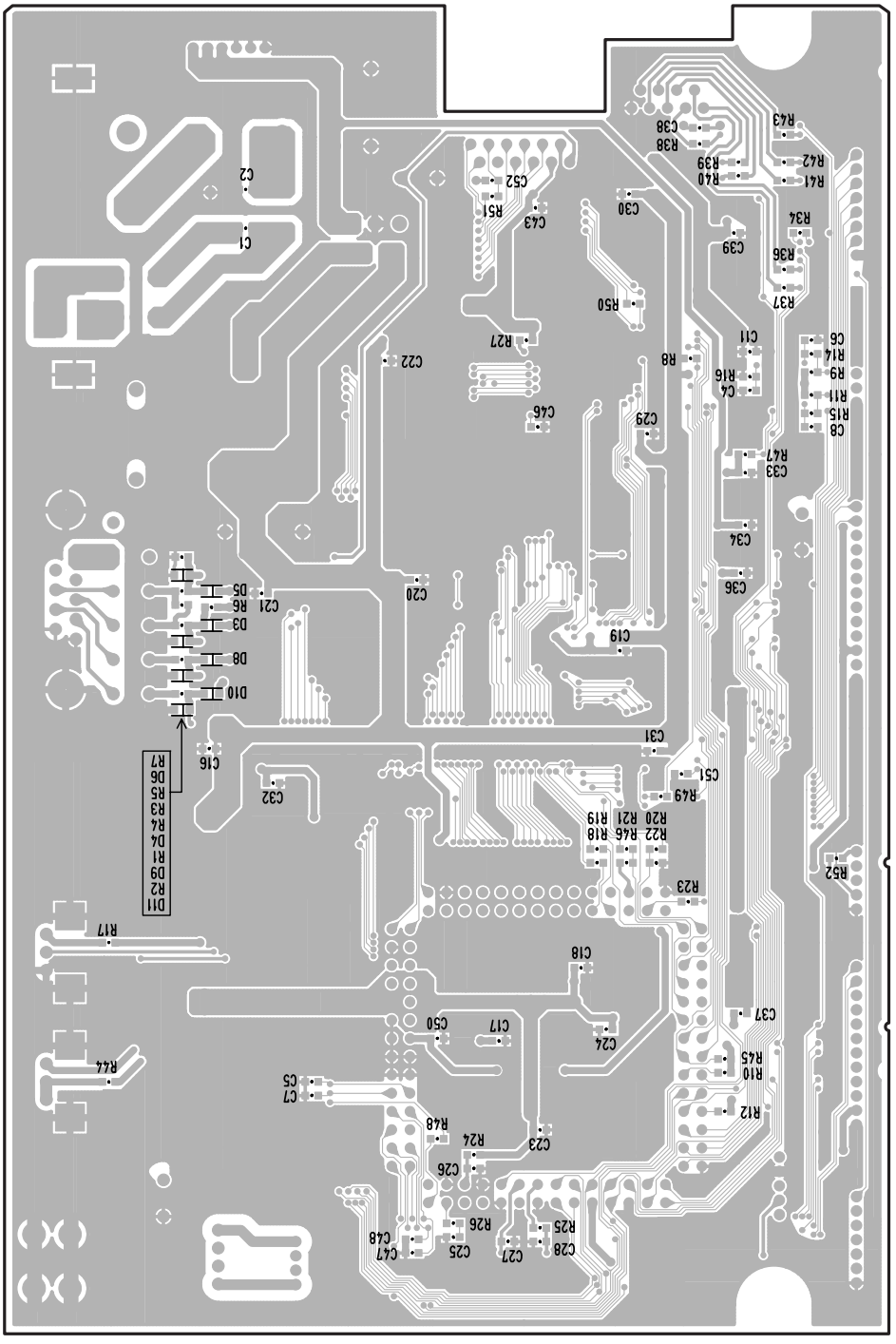

Pattern side

3NA-V582610-3 ⚠4

● REM 2/6 Circuit Board

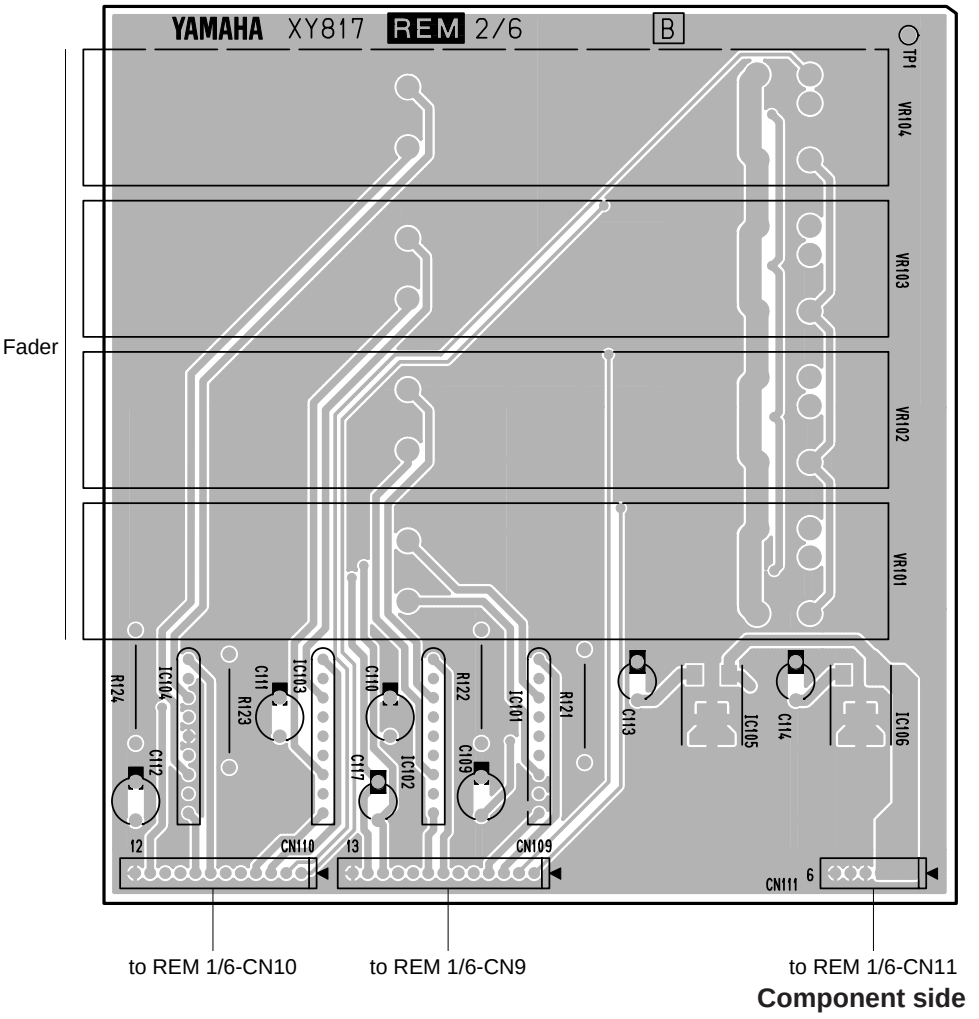

Component side

● REM 3/6 Circuit Board

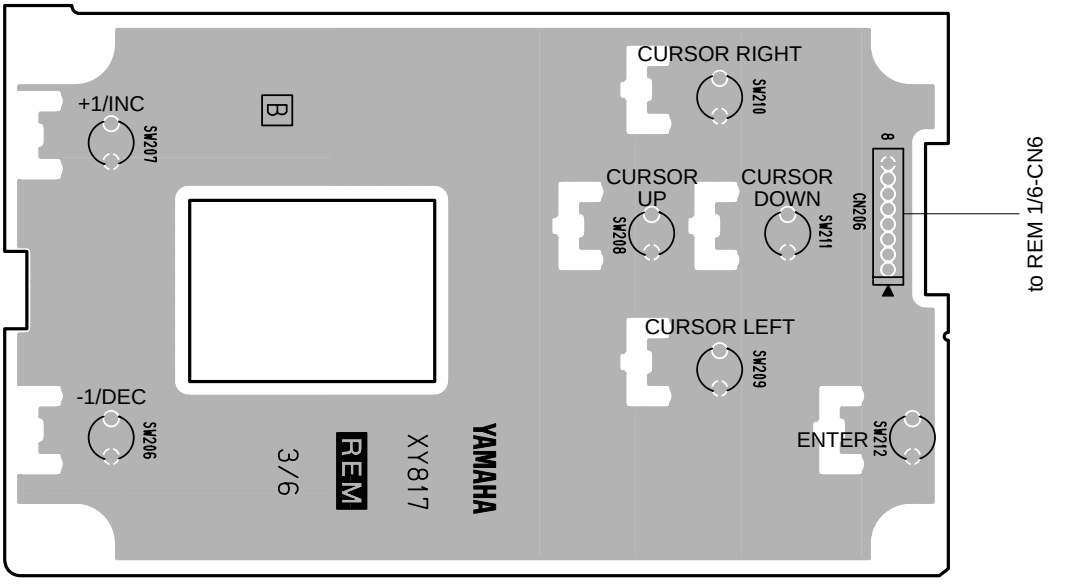

Component side

3NA-V582610-2 ⚠3

- REM 2/6 Circuit Board

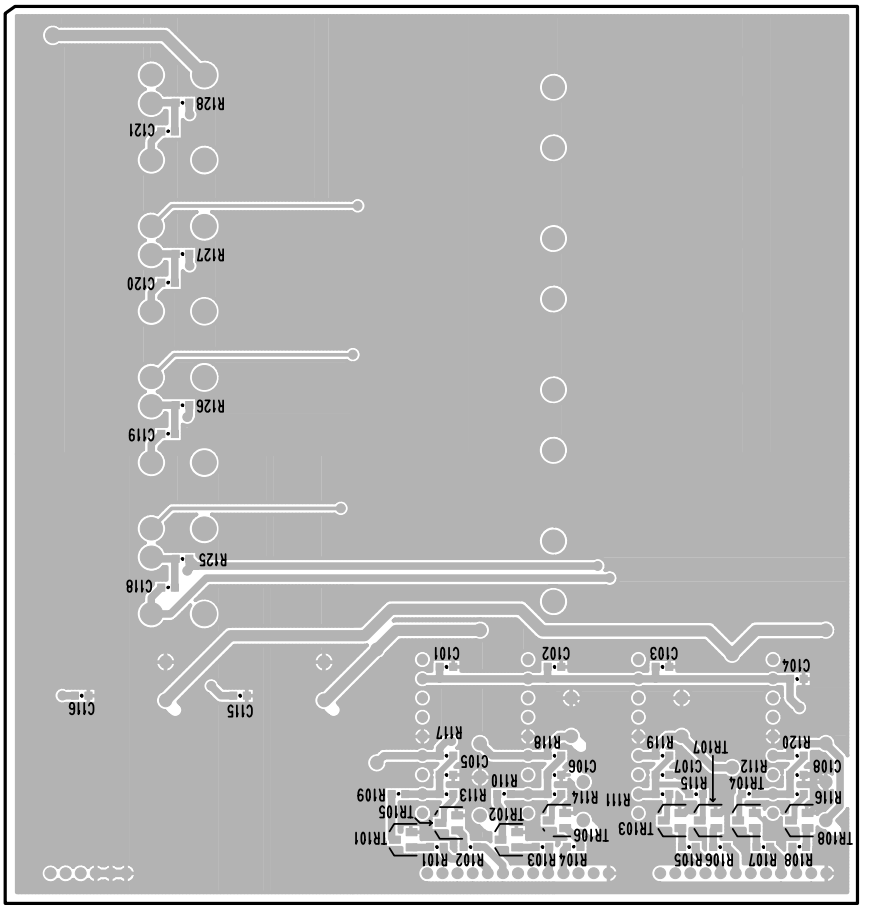

Pattern side

- REM 3/6 Circuit Board

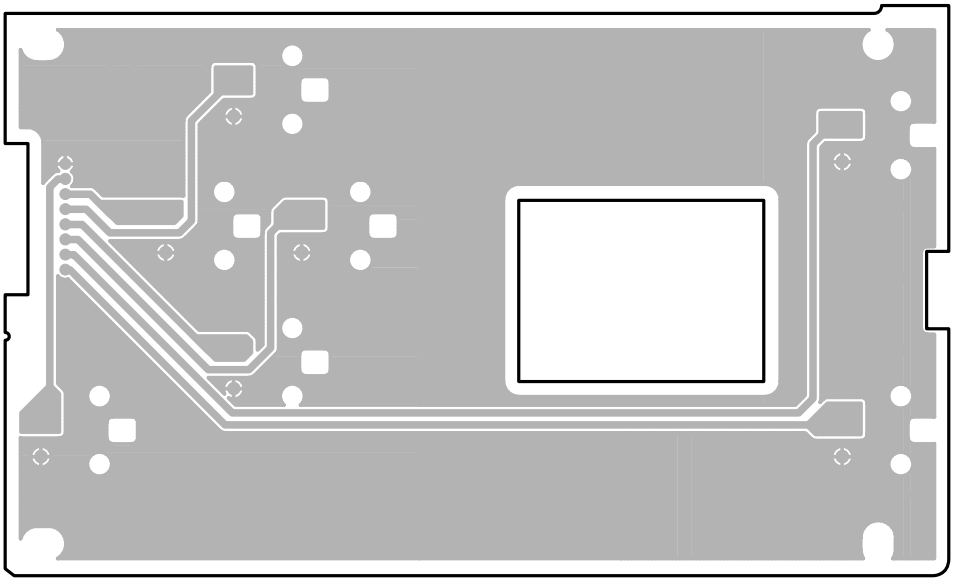

Pattern side

3NA-V582610-3 ⚠4

■ TEST PROGRAM

1. Range of application

This provides the stipulations for the dedicated remote controller for the sampling reverberator.

2. Preparations

2-1. Jig types

1. Power supply adaptor PA-6
2. Dsub male 9-pin loop-back jig (connected as shown in the figure).

2. DSUB Connection

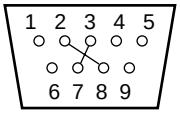

2-2. Connections

Connect the power supply adapter and loop-back connector jig.

3. Inspection procedure

3-1. Inspection items

No.	Item	Inspection
1	Initial Test	○
2	LED Test	○
3	LCD Test	○
4	Switch Test	○
5	Rotally Encoder Test	○
6	Fader Test	○
7	Fader Calibration	○
8	RS422 Test	△
9	...END...	–
10	Fader Aging	△

○ : Requires inspection △ : Inspect as necessary

3-1-1. Starting the diagnostic program (hereafter, diagnosis)

Executing the diagnosis

Turn on the power while simultaneously pressing the [UTILITY] and [PROGRAM] keys. The diagnosis will be executed and this menu screen will appear.

```
 RC-SREV1 DIAGNOSTIC:  PROGRAM  V1.02
[ ]   1. Initial Test
[ ]   2. LED Test
[ ]   3. LCD Test
[ ]   4. Switch Test
[ ]   5. Rotally Encoder Test
[ ]   6. Fader Test
[ ]   7. Fader Calibration
[ ]   8. RS422 Test
      9. .....END.....
     10. Fader Aging
```

* Operate the BRIGHT and CONT knobs. Check that the brightness and contrast adjustment is operating normally.

* For each test by using the cursor key [△] or [▽] to select items from the menu. Press the [ENTER] key to execute.

* The results of the inspection are shown as follows.

- LED: If OK, the CLIP LEDs for the inspection number section will come on. If NG, the same LEDs will go out and other LEDs will come on. (Upper right diagram)
- LCD: The progress status and results of the inspection (as OK, NG or END) are displayed.

The results of the inspection by LED

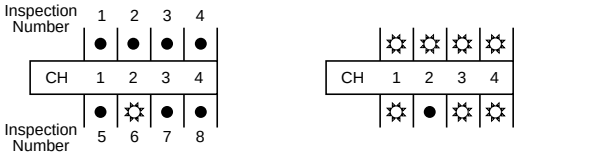

<The inspection number 6 is OK.> <The inspection number 6 is NG.>

3-1-2. Description of the inspection items

3-1-2-1. Initial test

• Outline

Checks the LCD controller and VRAM.

• Screen example

```
<<< Initial Test >>>                    OK

    LCD CONTROLLER   (IC12)  OK
    VRAM             (IC9)   OK

                 Push 'ENTER' key to continue
```

• End

Press the ENTER key to return to the menu screen.

3-1-2-2. LED Test

• Outline

Inspect the LEDs visually.

• Screen example

```
<<< LED Test >>>                        END

                 Push 'ENTER' key to continue
```

• Description

(1) The LEDs will come on in the sequence shown BYAPASS, INPUT CLIP, OUTPUT CLIP. Check that each LED comes on correctly.

(2) At the end, all LEDs will go out and then come on. Check that all LEDs come on.

*** To stop while in progress, press the [ENTER] key.**

• End

Press the [ENTER] key to return to the menu screen.

3-1-2-3. LCD Test

• Outline

Inspect the LCD visually.

• Description

The display on the LCD appears in the following sequence: diagonal, all black and all white. Confirm visually.

(1) Diagonal display

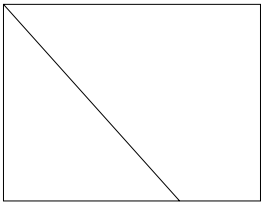

Press the [ENTER] key to move to the next item.

(2) All black display

Press the [ENTER] key to move to the next item.

(3) All white display

Press the [ENTER] key to move to the next item.

(4) End

```
<<< LCD Test >>>                                   END


                    Push 'ENTER' key to continue
```

• End

Press the [ENTER] key to return to the menu screen.

3-1-2-4. Switch Test

• Outline

Inspect the keys.

• Screen example

```
<<< Switch Test >>>                                OK

  Release All SW      :    OK
  Release BYPASS           (SW201, PE4 )   :   OK
  Release PROGRAM          (SW202, PE3 )   :   OK
  Release PARAM/MAIN       (SW203, PE2 )   :   OK
  Release PARAM/FINE       (SW204, PE1 )   :   OK
  Release UTILITY          (SW205, PE0 )   :   OK
  Release -1/DEC           (SW206, PE14)   :   OK
  Release +1/INC           (SW207, PE13)   :   OK
  Release UP               (SW208, PE12)   :   OK
  Release LEFT             (SW209, PE11)   :   OK
  Release RIGHT            (SW210, PE10)   :   OK
  Release DOWN             (SW211, PE9 )   :   OK
  Release ENTER            (SW212, PE8 )   :   OK

                    Push 'ENTER' key to continue
```

• Description

(1) An initial check is performed to check if there are any switches in the pressed state. Do not touch the switches while this initial check is being performed.

(2) The keys are pressed in the sequence shown in the test pattern figure. (Normally, the name of the next key to be pressed is displayed.)

(3) When all the keys have been checked, the OK mark is displayed. (If a switch is defective and the check cannot proceed, press [ENTER] key to force terminate the operation.)

Note) After a check has been performed for multiple switches being pressed, the program will go to the next switch check. Because of this, do not touch any of the other switches if a high-speed test is to be performed.

• End

Press the [ENTER] key to return to the menu screen.

3-1-2-5. Encoder Test

• Outline

Inspect the rotary encoder.

• Screen example

```
<<< Rotally Encoder Test >>>                       OK

  ENCODER --->   :   OK
  ENCODER <---   :   OK


                    Push 'ENTER' key to continue
```

• Description

(1) If “ENCODER--->”is displayed, turn the encoder in a clockwise direction. (1 cycle or more)

(2) If “ENCODER<---”is displayed, turn the encoder in a counter-clockwise direction. (1 cycle or more)

* If the program has ended normally, the OK mark will appear. If the encoder is defective and the program cannot proceed, the time will expire. It can also be terminated by pressing the [ENTER] key.

• **End**

Press the [ENTER] key to return to the menu screen.

3-1-2-6. Fader Test

• **Outline**

Inspect the motor fader.

• **Screen example**

```
<<< Fader Test >>>                                  OK

            [0]   [1]   [2]   [3]
  ---------------------------------------
  SPD=0 : 232  236  291  300
  SPD=1 : 342  344  404  404
  SPD=2 : 592  606  673  661
  SPD=3 : 703  709  790  783
  ---------------------------------------
            OK   OK   OK   OK

                 Push 'ENTER' key to continue
```

• **Description**

Change the movement distance and driver voltage of each fader and measure.

• **End**

Press the [ENTER] key to return to the menu screen.

3-1-2-7. Fader Calibration

• **Outline**

Motor fader correction is performed.

• **Screen example**

```
<<< Rotally Encoder Test >>>                        OK

  ENCODER --->   :   OK
  ENCODER <---   :   OK

                 Push 'ENTER' key to continue
```

• **Description**

After the fader calibration has been automatically performed, measure the return movement time of each fader is measured. If even one is NG, it will not be OK. Change the fader or perform “Fader Aging” as needed.

• **End**

Press the [ENTER] key to return to the menu screen.

3-1-2-8. Comm.Test

• **Outline**

A check of the REMOTE communication port is performed.

• **Screen example**

```
<<< RS422 Test >>>                                  OK

  Make Test Loop and Press Enter !
  Connect Tx Rx              OK
  Refuse Tx Rx, Press Enter !
  NON CONNECT Tx Rx   OK

                 Push 'ENTER' key to continue
```

• **Description**

(1) When “Make Test Loop and Press Enter!” is displayed, connect the loop back connector jig to the [REMOTE] terminal. After connecting, press the [ENTER] key to check the status of the connection.

(2) When “Refuse Tx Rs, Press Enter!” is displayed, remove the loop back connector jig from the [REMOTE] terminal. After removing, press the [ENTER] key to check the status of the non-connection.

• **End**

Press the [ENTER] key to return to the menu screen.

3-1-2-9. END

• **Outline**

Inspection is completed.

• **Screen example**

```
<<< .....END Test..... >>>                          END

  All Diag. is OK !!!

                 Push 'ENTER' key to continue
```

• **Description**

Inspection is completed. At this time, only when all the required inspection items are terminated and the results are OK will the “All Diag is OK” shown above be displayed. If the program could not be executed or if there were NG items, a list of those items will be displayed.

• **End**

Press the [ENTER] key to return to the menu screen.

3-1-2-10. Fader Aging

• Outline

Fader aging is performed.

• Screen example

```
<<< Fader Aging >>>                    END

  11/100

                 Push 'ENTER' key to continue
```

• Description

Here, 100 return cycles of the up/down movement of the fader is performed.

Use this if there is a fader with exceptionally bad operation.

• End

Press the [ENTER] key to return to the menu screen.

■ UPGRADING RC-SREV1

Refer to “6-2. Upgrading RC-SREV1” (Page 43) in the SREV1 test program.

REMOTE CONTROLLER

RC-SREV1

PARTS LIST

CONTENTS

Notes: DESTINATION ABBREVIATIONS

A:	Australian model	M:	South African model
B:	British model	O:	Chinese model
C:	Canadian model	Q:	South-east Asia model
D:	German model	T:	Taiwan model
E:	European model	U:	U.S.A. model
F:	French model	V:	General export model (110 V)
H:	North European model	W:	General export model (220 V)
I :	Indonesian model	N,X:	General export model
J :	Japanese model	Y:	Export model

WARNING

Components having special characteristics are marked ⚠ and must be replaced with parts having specification equal to those originally installed.

- The numbers in " QTY " show quantities for each unit.
- The parts with " **- -** " in " **PART NO.** " are not available as spare parts.
- The mark " } " in the remarks column indicates that these parts are interchangeable.
- The second letter of the shaded ( ) part number is O, not zero.
- The second letter of the shaded ( ) part number is I, not one.

OVERALL ASSEMBLY

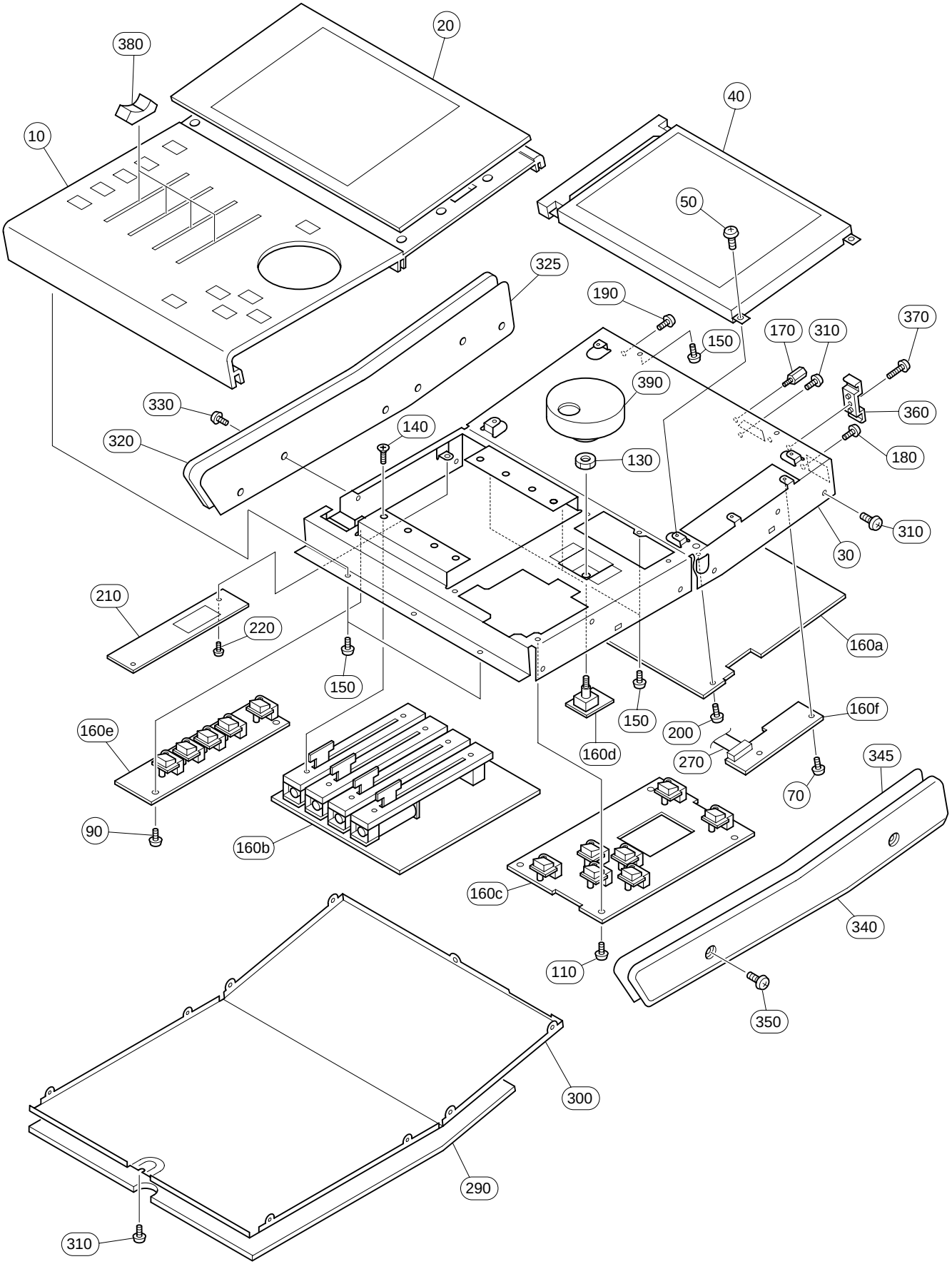

	REF NO.	PART NO.	DESCRIPTION			REMARKS	QTY	RANK
		- -	OVERALL ASSEMBLY			RC-SREV1 (V652850)		
*	10	**V6528900**	Top Panel					
*	20	**V6529200**	Cover					
*	30	**V6528600**	Sub Chassis					
	40	**V5605200**	LCD	LM320191				23
	50	**EG320220**	Bind Head Screw	2.6X6 MFZN2BL			4	01
	70	**EP600230**	Bind Head Tapping Screw-B	3.0X6 MFZN2BL			2	01
	90	**EP600230**	Bind Head Tapping Screw-B	3.0X6 MFZN2BL			2	01
	110	**EP600230**	Bind Head Tapping Screw-B	3.0X6 MFZN2BL			4	01
	130	**V2431400**	Hexagonal Nut	9.0X11				01
	140	**VD016900**	Flat Head Screw	3.0X4 MFZN2Y			8	01
	150	**EP600190**	Bind Head Tapping Screw-B	3.0X8 MFZN2BL			7	01
	160	- -	Circuit Board	REM		(V582610)		
*	160a	**AAX20920**	Circuit Board	REM 1/6				
*	160b	**AAX20930**	Circuit Board	REM 2/6				
*	160c	**AAX20940**	Circuit Board	REM 3/6				
*	160d	**AAX20950**	Circuit Board	REM 4/6				
*	160e	**AAX20960**	Circuit Board	REM 5/6				
*	160f	**AAX20970**	Circuit Board	REM 6/6				
	170	**VT362500**	Jack Socket	17L-003A3			2	01
	180	**EP600230**	Bind Head Tapping Screw-B	3.0X6 MFZN2BL				01
	190	**VB659000**	Bind Head Screw	3.0X8 MFZN2BL				01
	200	**EP600230**	Bind Head Tapping Screw-B	3.0X6 MFZN2BL			2	01
⚠*	210	**V6627900**	Power Inverter Unit	CXA-L0605-VJL				
	220	**VQ717600**	Bind Head Screw	2.0X3 MFZN2Y			2	01
*	270	**MF109100**	Connector Assembly	9P 100mm P=1.25				
*	290	**V6735800**	Bottom Sheet					
*	300	**V6528700**	Bottom Cover					
	310	**EP600190**	Bind Head Tapping Screw-B	3.0X8 MFZN2BL			10	01
*	320	**V6529300**	Side Pad	LEFT				
	325	- -	Shield Sheet	LEFT		(V738140)		
	330	**VH741100**	Bind Head Tapping Screw-B	SP 3.0X10 MFZN2BL			2	01
*	340	**V6529400**	Side Pad	RIGHT				
	345	- -	Shield Sheet	RIGHT		(V738150)		
	350	**VH741100**	Bind Head Tapping Screw-B	SP 3.0X10 MFZN2BL			2	01
	360	**VC407100**	Cord Column					02
	370	**VB659000**	Bind Head Screw	3.0X8 MFZN2BL				01
*	380	**V7421900**	Knob, Fader	S Gray/Dark Gray		Faders	4	
*	390	**V6529100**	Knob Wheel			PARAMETER		
			ACCESSORY					
*		**V6527300**	Cabel	DSUB 9P 20m				

*: New Parts

RANK: Japan only

■ ELECTRICAL PARTS

REF NO.	PART NO.	DESCRIPTION			REMARKS	QTY	RANK
		ELECTRICAL PARTS			RC-SREV1		
	- -	Circuit Board	REM		(V582610)(XY817B0)		
*	AAX20920	Circuit Board	REM 1/6		(XY817B0)		
*	AAX20930	Circuit Board	REM 2/6		(XY817B0)		
*	AAX20940	Circuit Board	REM 3/6		(XY817B0)		
*	AAX20950	Circuit Board	REM 4/6		(XY817B0)		
*	AAX20960	Circuit Board	REM 5/6		(XY817B0)		
*	AAX20970	Circuit Board	REM 6/6		(XY817B0)		
	- -	Circuit Board	REM		(V582610)(XY817B0)		
*	AAX20920	Circuit Board	REM 1/6		(XY817B0)		
*	AAX20930	Circuit Board	REM 2/6		(XY817B0)		
*	AAX20940	Circuit Board	REM 3/6		(XY817B0)		
*	AAX20950	Circuit Board	REM 4/6		(XY817B0)		
*	AAX20960	Circuit Board	REM 5/6		(XY817B0)		
*	AAX20970	Circuit Board	REM 6/6		(XY817B0)		
	- -	LED Spacer			BYPASS (V733240)		
	- -	LED Cover			(V738550)		
	VT839000	Push Button	PRO R3		BYPASS,PROGRAM,P.-MAIN, P.-FINE,UTILITY,-1/DEC, +1/INC,CURSOR,ENTER	12	03
C1	US145100	Ceramic Capacitor-F (chip)	0.1000 25V Z				01
C2	US145100	Ceramic Capacitor-F (chip)	0.1000 25V Z				01
C3	VH340400	Electrolytic Cap.	330.00 25.0V				01
C4	US145100	Ceramic Capacitor-F (chip)	0.1000 25V Z				01
C5	US135100	Ceramic Capacitor-F (chip)	0.1000 16V Z				01
C6	US063150	Ceramic Capacitor-B (chip)	1500P 50V K				01
C7	US135100	Ceramic Capacitor-F (chip)	0.1000 16V Z				01
C8	US063150	Ceramic Capacitor-B (chip)	1500P 50V K				01
C9	VI254700	Electrolytic Cap.	470.00 16.0V				01
C10	VI254700	Electrolytic Cap.	470.00 16.0V				01
C11	US145100	Ceramic Capacitor-F (chip)	0.1000 25V Z				01
C16	US135100	Ceramic Capacitor-F (chip)	0.1000 16V Z				01
-24	US135100	Ceramic Capacitor-F (chip)	0.1000 16V Z				01
C25	US062470	Ceramic Capacitor-SL(chip)	470P 50V J				01
C26	US135100	Ceramic Capacitor-F (chip)	0.1000 16V Z				01
C27	US061220	Ceramic Capacitor-CH(chip)	22P 50V J				01
C28	US061220	Ceramic Capacitor-CH(chip)	22P 50V J				01
C29	US135100	Ceramic Capacitor-F (chip)	0.1000 16V Z				01
-34	US135100	Ceramic Capacitor-F (chip)	0.1000 16V Z				01
C35	UR827470	Electrolytic Cap.	47.00 10.0V				01
C36	US135100	Ceramic Capacitor-F (chip)	0.1000 16V Z				01
-39	US135100	Ceramic Capacitor-F (chip)	0.1000 16V Z				01
C42	UI547100	Electrolytic Cap.	10.00 25.0V				01
C43	US135100	Ceramic Capacitor-F (chip)	0.1000 16V Z				01
C44	UR867220	Electrolytic Cap.	22.00 50.0V				01
C45	VH340400	Electrolytic Cap.	330.00 25.0V				01
C46	US063100	Ceramic Capacitor-B (chip)	1000P 50V K				01
C47	US135100	Ceramic Capacitor-F (chip)	0.1000 16V Z				01
C48	US135100	Ceramic Capacitor-F (chip)	0.1000 16V Z				01
C50	US135100	Ceramic Capacitor-F (chip)	0.1000 16V Z				01
C51	US061470	Ceramic Capacitor-CH(chip)	47P 50V J				01
C52	US062100	Ceramic Capacitor-SL(chip)	100P 50V J				01
C101	US135100	Ceramic Capacitor-F (chip)	0.1000 16V Z				01
-108	US135100	Ceramic Capacitor-F (chip)	0.1000 16V Z				01
C109	UR838220	Electrolytic Cap.	220.00 16.0V				01
-112	UR838220	Electrolytic Cap.	220.00 16.0V				01
C113	UR847470	Electrolytic Cap.	47.00 25.0V				01
C114	UR847470	Electrolytic Cap.	47.00 25.0V				01
C115	US135100	Ceramic Capacitor-F (chip)	0.1000 16V Z				01
C116	US135100	Ceramic Capacitor-F (chip)	0.1000 16V Z				01
C117	UR847470	Electrolytic Cap.	47.00 25.0V				01
C118	US135100	Ceramic Capacitor-F (chip)	0.1000 16V Z				01
-121	US135100	Ceramic Capacitor-F (chip)	0.1000 16V Z				01
CN3	VB389900	Connector Base Post	PH 3P TE				01
CN4	- -	Connector Assembly	SAN&51021 5P		(V700120)		
CN6	VB390400	Connector Base Post	PH 8P TE				01
CN8	VB390300	Connector Base Post	PH 7P TE				01
CN9	VF283100	Connector Base Post	PH 13P TE				01
CN10	VB390800	Connector Base Post	PH 12P TE				01

*: New Parts

RANK: Japan only

	REF NO.	PART NO.	DESCRIPTION			REMARKS	QTY	RANK
	CN11	**VB390200**	Connector Base Post	PH 6P TE				01
	CN13	**VQ047200**	Connector, FFC	52045 9P TE				01
	CN14	**VQ047300**	Connector, FFC	52045 12P TE				02
*	CN17	**V6164700**	Connector, D-Sub	17LE-23090-27(D40)		REMOTE		
	CN18	**- -**	Connector Assembly	SAN&BH 2P		(V700110)		
	CN20	**LB918040**	Connector Base Post	XH 4P TE				01
	CN109	**- -**	Connector Assembly	SAN&PH 13P 140L		(V684060)		
	CN110	**- -**	Connector Assembly	SAN&PH 12P 200L		(V684140)		
	CN111	**- -**	Connector Assembly	SAN&PH 6P 160L		(V652810)		
	CN203	**- -**	Connector Assembly	SAN&PH 3P 100L		(VM85710)		
	CN206	**- -**	Connector Assembly	SAN&PH 8P 200L		(VP91350)		
	CN208	**- -**	Connector Assembly	7P 160mm B&C 2mm		(VY91480)		
	CN213	**VQ044400**	Connector, FFC	52044 9P SE				01
	D1	**V2320300**	Diode	RK33				01
	D2	**V2320300**	Diode	RK33				01
	D3	**VT332900**	Diode	1SS355 TE-17				01
	-6	**VT332900**	Diode	1SS355 TE-17				01
	D7	**VP974300**	Diode	D3S6M-4002				03
	D8	**VT332900**	Diode	1SS355 TE-17				01
	-11	**VT332900**	Diode	1SS355 TE-17				01
	EC201	**VR021100**	Encoder	EC16B242040SA		PARAMETER		04
	EM1	**FZ007070**	LC Filter	LS MT X222MB				01
	-4	**FZ007070**	LC Filter	LS MT X222MB				01
	EM5	**FZ006920**	LC Filter	LS MT B271KB				01
	-8	**FZ006920**	LC Filter	LS MT B271KB				01
	IC1	**XT442A00**	IC	SI-8050S		REGULATOR +5V SWITCH		05
	IC2	**XW104A00**	IC	MM74HC14SJX		INVERTER		01
	IC4	**XT619A00**	IC	SN75179BPSR		LINE DRIVER		05
*	IC5	**XZ782A00**	IC	MBM29F800BA-70PFTN		FLASH ROM 8M		
	IC6	**XU147A00**	IC	HD6417014F28		CPU		09
	IC7	**XV976A00**	IC	M5M51008CFP-70H		SRAM 1M		07
	IC8	**XV976A00**	IC	M5M51008CFP-70H		SRAM 1M		07
*	IC9	**XZ388A00**	IC	W24257S-70LL-EL10		VRAM 256K		
	IC10	**XY353A00**	IC	MM74HC138SJX		DECODER		02
	IC11	**XY353A00**	IC	MM74HC138SJX		DECODER		02
*	IC12	**XY766A00**	IC	SED1353F-0A		LCD CONTROLLER		
	IC13	**XS721A00**	IC	UPC78L05T		REGULATOR +5V		01
	IC14	**XY198A00**	IC	MM74HC273SJX		D-FF		03
	IC14	**XH233A00**	IC	SN74HC273NSR				03
	IC15	**XY198A00**	IC	MM74HC273SJX				03
	IC15	**XH233A00**	IC	SN74HC273NSR				03
*	IC16	**XY938A00**	IC	TC74ACT174F		D-FF		
	IC18	**XW701A00**	IC	CE-3101-T		DC-DC CONVERTER		09
	IC19	**XW107A00**	IC	MM74HC245ASJX		BUFFER		03
	IC23	**XY153A00**	IC	MM74HC74ASJX		D-FF		01
	IC24	**XP226A00**	IC	IC-PST591DMT		SYSTEM RESET		03
*	IC26	**XY938A00**	IC	TC74ACT174F		D-FF		
	IC101	**XF557A00**	IC	TA7291S		MOTOR DRIVER		03
	-104	**XF557A00**	IC	TA7291S		MOTOR DRIVER		03
	IC105	**XW617A00**	IC	NJM7810DLA		REGULATOR +10V		02
	IC106	**XW617A00**	IC	NJM7810DLA		REGULATOR +10V		02
	JK4	**VJ207400**	DC-IN Jack	16V DC 3A HEC2305		DC 12V IN		01
	K1	**VC719300**	Terminal Plate	P-424				01
	K2	**VP050400**	Switch Panel	IFB485				11
	L1	**VH746100**	Choke Coil	PLT09H-2003R 20uH				04
	L2	**V4678200**	Coil	HP-022Z 180uH				05
	LD201	**VZ533800**	LED	SLR-325VRT31(TA)		INPUT CLIP CH1		01
	LD202	**VZ533800**	LED	SLR-325VRT31(TA)		INPUT CLIP CH2		01
	LD203	**VZ533800**	LED	SLR-325VRT31(TA)		INPUT CLIP CH3		01
	LD204	**VZ533800**	LED	SLR-325VRT31(TA)		INPUT CLIP CH4		01
	LD205	**VZ533800**	LED	SLR-325VRT31(TA)		OUTPUT CLIP CH1		01
	LD206	**VZ533800**	LED	SLR-325VRT31(TA)		OUTPUT CLIP CH2		01
	LD207	**VZ533800**	LED	SLR-325VRT31(TA)		OUTPUT CLIP CH3		01
	LD208	**VZ533800**	LED	SLR-325VRT31(TA)		OUTPUT CLIP CH4		01
	LD211	**V5295900**	LED	SLP-253B Green		BYPASS		01
	R1	**RD354100**	Carbon Resistor (chip)	10 63M J				01
	R2	**RD354100**	Carbon Resistor (chip)	10 63M J				01
	R3	**RD355150**	Carbon Resistor (chip)	150 63M J				01
	R4	**RD356100**	Carbon Resistor (chip)	1.0K 63M J				01
	R5	**RD356100**	Carbon Resistor (chip)	1.0K 63M J				01

*: New Parts

RANK: Japan only

	REF NO.	PART NO.	DESCRIPTION			REMARKS	QTY	RANK
	R6	**RD357100**	Carbon Resistor (chip)	10K 63M J				01
	-8	**RD357100**	Carbon Resistor (chip)	10K 63M J				01
	R9	**RD356100**	Carbon Resistor (chip)	1.0K 63M J				01
	R10	**RD357100**	Carbon Resistor (chip)	10K 63M J				01
	R11	**RD356100**	Carbon Resistor (chip)	1.0K 63M J				01
	R12	**RD357100**	Carbon Resistor (chip)	10K 63M J				01
*	R14	**RD358510**	Carbon Resistor (chip)	510K 63M J				
*	R15	**RD358510**	Carbon Resistor (chip)	510K 63M J				
	R16	**RD357100**	Carbon Resistor (chip)	10K 63M J				01
	R17	**RD357100**	Carbon Resistor (chip)	10K 63M J				01
	R18	**RD354330**	Carbon Resistor (chip)	33 63M J				01
	-21	**RD354330**	Carbon Resistor (chip)	33 63M J				01
	R22	**RD357100**	Carbon Resistor (chip)	10K 63M J				01
*	R24	**RD355200**	Carbon Resistor (chip)	200 63M J				
	R25	**RD355220**	Carbon Resistor (chip)	220 63M J				01
	R26	**RD356300**	Carbon Resistor (chip)	3.0K 63M J				01
	R27	**RD357100**	Carbon Resistor (chip)	10K 63M J				01
	R34	**RD355820**	Carbon Resistor (chip)	820 63M J				01
	R36	**RD355820**	Carbon Resistor (chip)	820 63M J				01
	-43	**RD355820**	Carbon Resistor (chip)	820 63M J				01
	R44	**RD357620**	Carbon Resistor (chip)	62K 63M J				01
	R45	**RD357100**	Carbon Resistor (chip)	10K 63M J				01
	R46	**RD357100**	Carbon Resistor (chip)	10K 63M J				01
	R47	**RD356470**	Carbon Resistor (chip)	4.7K 63M J				01
	R48	**RD354100**	Carbon Resistor (chip)	10 63M J				01
	-51	**RD354100**	Carbon Resistor (chip)	10 63M J				01
	R52	**RD356510**	Carbon Resistor (chip)	5.1K 63M J				01
	R101	**RD357100**	Carbon Resistor (chip)	10K 63M J				01
	-108	**RD357100**	Carbon Resistor (chip)	10K 63M J				01
	R109	**RD356510**	Carbon Resistor (chip)	5.1K 63M J				01
	-112	**RD356510**	Carbon Resistor (chip)	5.1K 63M J				01
	R113	**RD357150**	Carbon Resistor (chip)	15K 63M J				01
	-116	**RD357150**	Carbon Resistor (chip)	15K 63M J				01
	R117	**RD356510**	Carbon Resistor (chip)	5.1K 63M J				01
	-120	**RD356510**	Carbon Resistor (chip)	5.1K 63M J				01
	R121	**VC756300**	Metal Oxide Film Resistor	10.0 2W J				01
	-124	**VC756300**	Metal Oxide Film Resistor	10.0 2W J				01
	R125	**RD355100**	Carbon Resistor (chip)	100 63M J				01
	-128	**RD355100**	Carbon Resistor (chip)	100 63M J				01
	RA1	**RE044330**	Resistor Array	33X4				01
	-4	**RE044330**	Resistor Array	33X4				01
	RA5	**RE047100**	Resistor Array	10KX4				01
	-12	**RE047100**	Resistor Array	10KX4				01
⚠	SW1	**V3449700**	Switch	SDDJE1-R-1		POWER ON/OFF		03
	SW2	**VR044000**	Push Switch	SKQDAA				01
	SW201	**VV056000**	Tact Switch	SKQNAE025A		BYPASS		01
	SW202	**VV056000**	Tact Switch	SKQNAE025A		PROGRAM		01
	SW203	**VV056000**	Tact Switch	SKQNAE025A		PARAMETER MAIN		01
	SW204	**VV056000**	Tact Switch	SKQNAE025A		PARAMETER FINE		01
	SW205	**VV056000**	Tact Switch	SKQNAE025A		UTILITY		01
	SW206	**VV056000**	Tact Switch	SKQNAE025A		-1/DEC		01
	SW207	**VV056000**	Tact Switch	SKQNAE025A		+1/INC		01
	SW208	**VV056000**	Tact Switch	SKQNAE025A		CURSOR UP		01
	SW209	**VV056000**	Tact Switch	SKQNAE025A		CURSOR LEFT		01
	SW210	**VV056000**	Tact Switch	SKQNAE025A		CURSOR RIGHT		01
	SW211	**VV056000**	Tact Switch	SKQNAE025A		CURSOR DOWN		01
	SW212	**VV056000**	Tact Switch	SKQNAE025A		ENTER		01
	TR101	**VD303700**	Transistor	2SC3326 A,B TE85R				01
	-108	**VD303700**	Transistor	2SC3326 A,B TE85R				01
*	VR1	**V6630100**	Rotary Variable Resistor			LCD BRIGHT		
*	VR2	**V6630000**	Rotary Variable Resistor			LCD CONT		
	VR101	**VZ523400**	Slide Pot., Motor Drive	B10K		Fader		08
	VR102	**VZ523400**	Slide Pot., Motor Drive	B10K		Fader		08
	VR103	**VZ523400**	Slide Pot., Motor Drive	B10K		Fader		08
	VR104	**VZ523400**	Slide Pot., Motor Drive	B10K		Fader		08
	X1	**V3719200**	Quartz Crystal Unit	6.7584MHz SMD-49				03
		V5605200	LCD	LM320191				23
⚠ *		**V6627900**	Power Inverter Unit	CXA-L0605-VJL				

*: New Parts

RANK: Japan only

SREV1 OVERALL CIRCUIT DIAGRAM 1/3 (CPU)

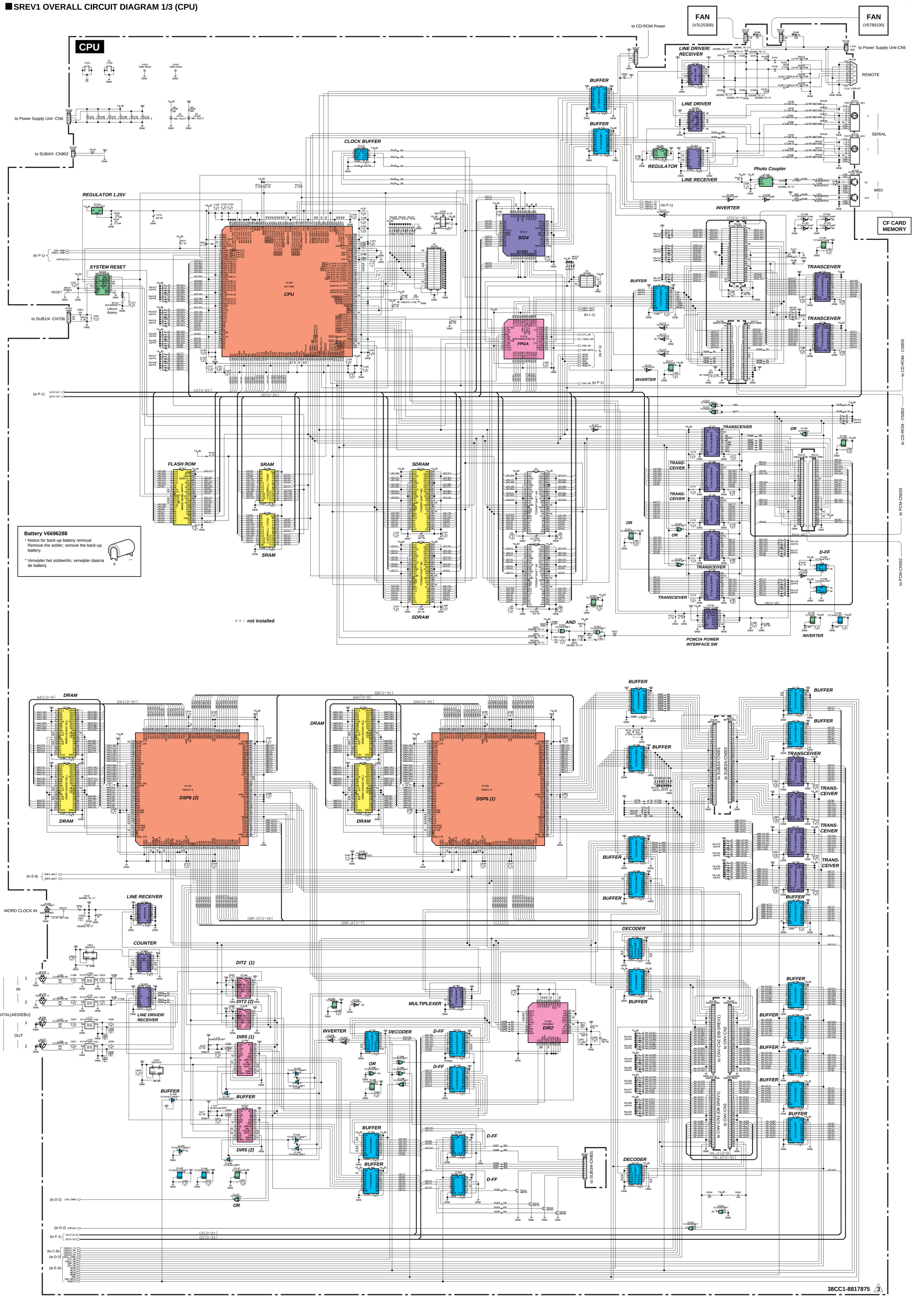

Battery V6696288

- Notice for back-up battery removal
  Remove the solder; remove the back-up battery.
- Verwijder het soldeertin, verwijder daama de batterij.

×× : not installed

（セ）: Ceramic Capacitor
（酸金）: Metal Oxide Film Resistor

Note : See parts list for details of circuit board component parts

■SREV1 OVERALL CIRCUIT DIAGRAM 2/3 (CNV)

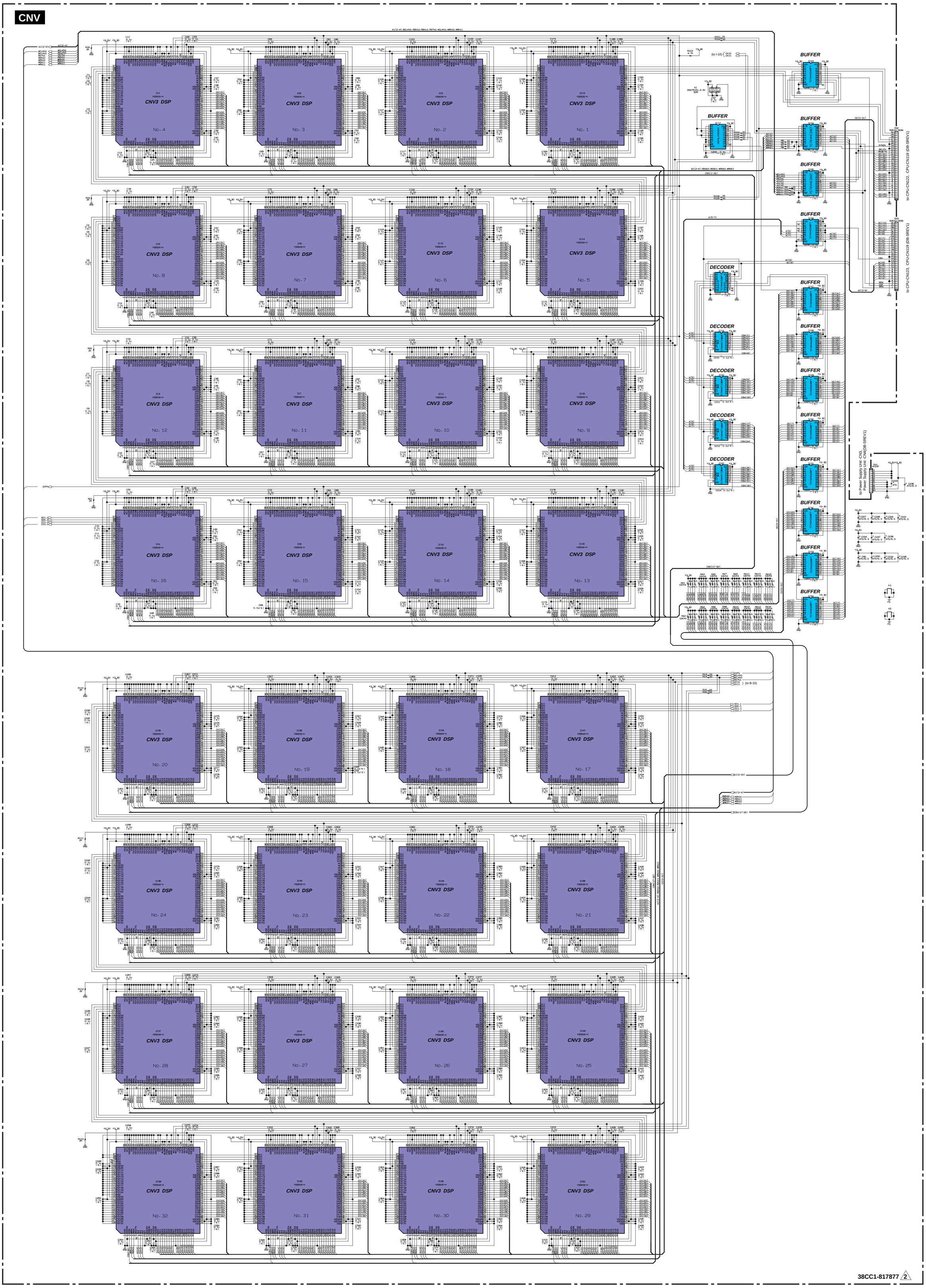

(セ): Ceramic Capacitor

Note : See parts list for details of circuit board component parts

■SREV1 OVERALL CIRCUIT DIAGRAM 3/3 (CD-ROM, PCM, SUB1/4, SUB2/4, SUB3/4, SUB4/4)

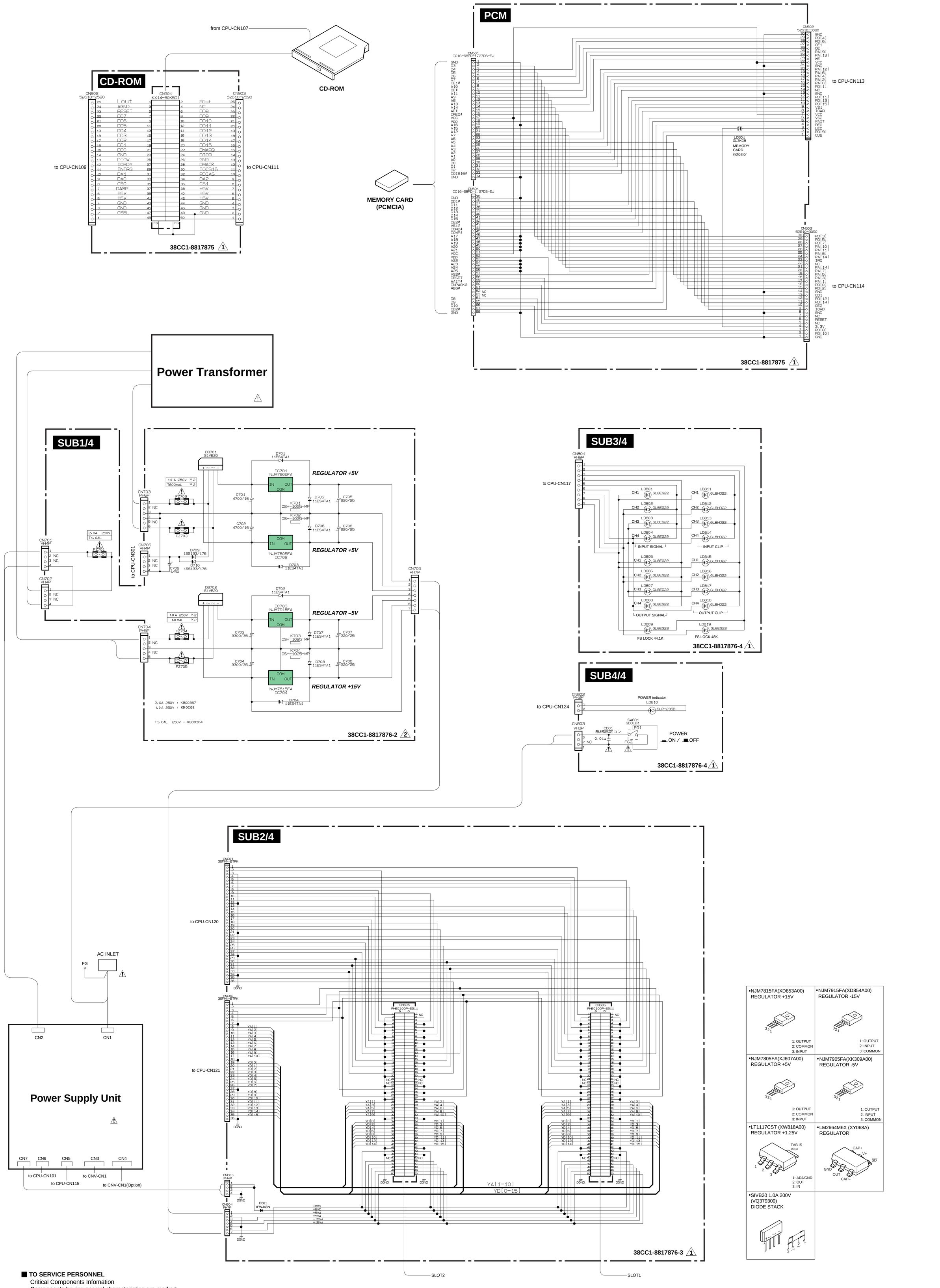

■ **TO SERVICE PERSONNEL**
Critical Components Infomation
Components having special characteristics are marked and must be replaced with parts having specifications equel to those originally installed.

（規格認定コン）: Capacitor

Note : See parts list for details of circuit board component parts

■RC-SREV1 OVERALL CIRCUIT DIAGRAM (REM1/6, REM2/6, REM3/6, REM4/6, REM5/6, REM6/6)

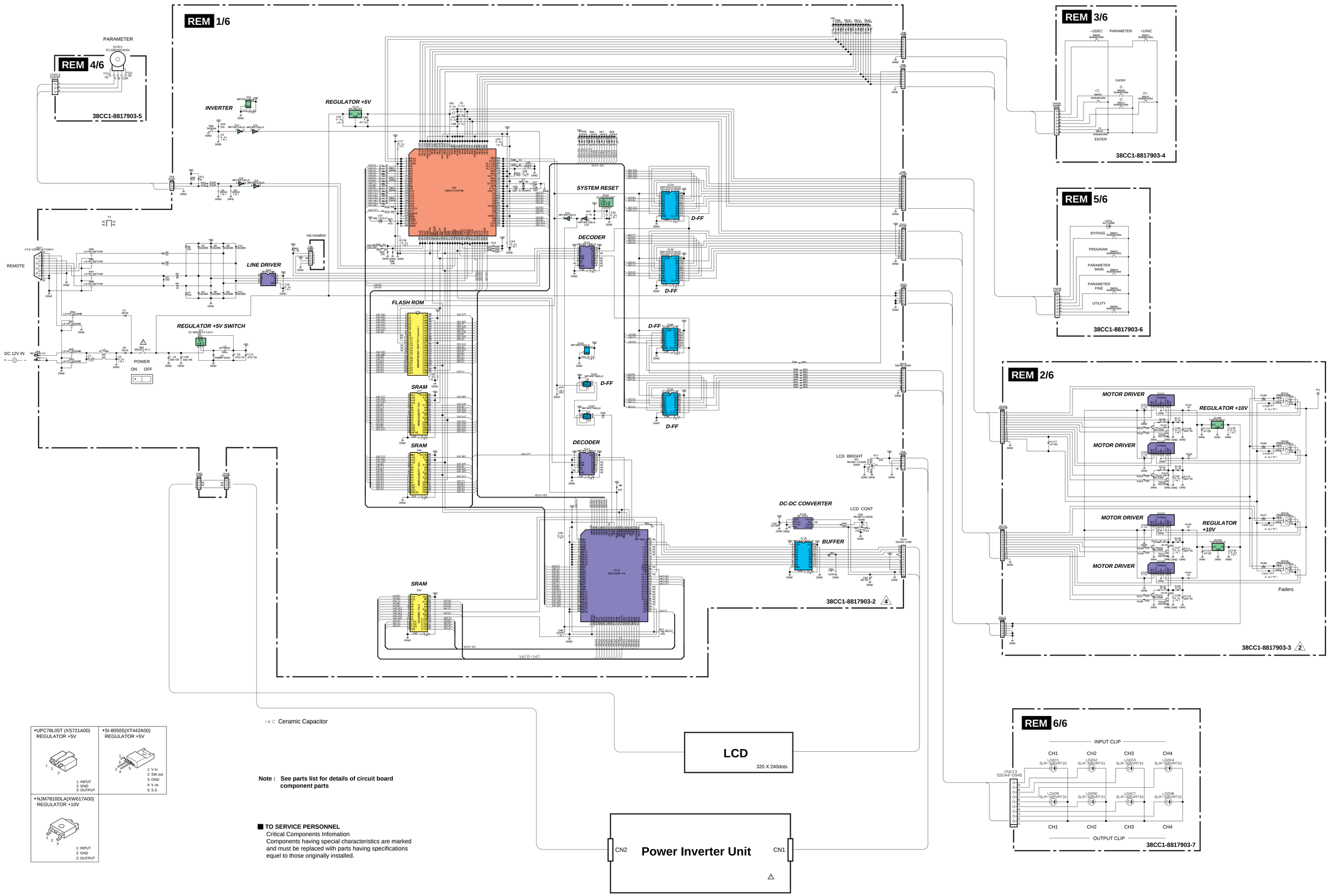

(*): Ceramic Capacitor

Note : See parts list for details of circuit board component parts

■ **TO SERVICE PERSONNEL**
Critical Components Infomation
Components having special characteristics are marked and must be replaced with parts having specifications equel to those originally installed.

- UPC78L05T (XS721A00) REGULATOR +5V

1: INPUT
2: GND
3: OUTPUT

- SI-8050S(XT442A00) REGULATOR +5V

1: V in
2: SW out
3: GND
4: V os
5: S.S

- NJM7810DLA(XW617A00) REGULATOR +10V

1: INPUT
2: GND
3: OUTPUT