Errata

Title & Document Type: 4195A Spectrum Network/Analyzer Service Manual

Manual Part Number: 04195-90200

Revision Date: August 1988

HP References in this Manual

This manual may contain references to HP or Hewlett-Packard. Please note that Hewlett-Packard's former test and measurement, semiconductor products and chemical analysis businesses are now part of Agilent Technologies. We have made no changes to this manual copy. The HP XXXX referred to in this document is now the Agilent XXXX. For example, model number HP8648A is now model number Agilent 8648A.

About this Manual

We've added this manual to the Agilent website in an effort to help you support your product. This manual provides the best information we could find. It may be incomplete or contain dated information, and the scan quality may not be ideal. If we find a better copy in the future, we will add it to the Agilent website.

Support for Your Product

Agilent no longer sells or supports this product. You will find any other available product information on the Agilent Test & Measurement website:

www.tm.agilent.com

Search for the model number of this product, and the resulting product page will guide you to any available information. Our service centers may be able to perform calibration if no repair parts are needed, but no other support from Agilent is available.

Agilent Technologies

HEWLETT PACKARD

SERVICE MANUAL

MODEL 4195A NETWORK/SPECTRUM ANALYZER

(Including Option 001)

SERIAL NUMBERS

This manual applies directly to instruments whose serial number prefix is 2738J- and whose ROM-based firmware is version 1.00.

For additional important information about serial numbers, read SERIAL NUMBER in Section 7 of the Operation Manual.

Manual Part Number: 04195-90200
Microfiche Part Number: 04195-90250

Printed: August 1988

MANUAL PRINTING HISTORY

August 1988	First Edition	This manual is the first edition Service Manual for HP 4195A Network/Spectrum Analyzer.

DOCUMENTATION OUTLINE

Three documentations; Operation Manual, Maintenance Manual, and Service Manual, are available for the HP 4195A. The Operation and Maintenance Manuals are shipped with the HP 4195A, the Service Manual is not included with the instrument. The contents of each manual are shown below.

Operation Manual
(HP Part Nunber: 04195-90000)

Getting Started, Product Overview, Basic Measurement Examples, Measurement Capabilities, Extended Capabilities, Programming, General Information

Maintenance Manual
(HP Part Nunber: 04195-90100)

General Information, Performance Tests, Adjustments

Service Manual (this manual)
(HP Part Number: 04195-90200)

General Information, Disassembly Procedures, Overall Troubleshooting, Control Unit Service Sheets, Measurement Unit Bottom Chassis Service Sheets, Measurement Unit Top Chassis Service Sheets, General Parts Listing

SAFETY SUMMARY

The following general safety precautions must be observed during all phases of operation, service, and repair of this instrument. Failure to comply with these precautions or with specific **WARNINGS** given elsewhere in this manual violates safety standards of design, manufacture, and intended use of the instrument. **The Hewlett-Packard Company assumes no liability for the customer's failure to comply with these requirements.**

GROUND THE INSTRUMENT
To minimize shock hazards, the instrument chassis and cabinet must be connected to an electrical ground. The instrument is equipped with a three-conductor AC power cable. The power cable must be plugged into an approved three-contact electrical outlet or used with a three-contact to two-contact adapter with the grounding wire (**green**) firmly connected to an electrical ground (safety ground) at the power outlet. The power jack and the mating plug of the power cable meet International Electrotechnical Commission (IEC) safety standards.

DO NOT OPERATE IN AN EXPLOSIVE ATMOSPHERE
Do not operate the instrument in the presence of flammable gasses or fumes. Operation of any electrical instrument in such an environment constitutes a safety hazard.

KEEP AWAY FROM LIVE CIRCUITS
Operating personnel must not remove instrument covers. Component replacement and internal adjustments must be made by qualified maintenance personnel. Do not replace components with power cable connected. Under certain conditions, dangerous voltages may exist even with the power cable removed. To avoid injuries, always disconnect power and discharge circuits before touching them.

DO NOT SERVICE OR ADJUST ALONE
Do not attempt internal service or adjustment unless another person, capable of rendering first aid and resuscitation, is present.

USE CAUTION WHEN EXPOSING OR HANDLING THE CRT
Breakage of the cathode-ray tube (CRT) causes a high velocity scattering of glass fragments (implosion). To prevent CRT implosion, avoid rough handling or jarring of the instrument. Handling of the CRT shall be done only by qualified maintenance personnel using approved safety mask and gloves.

DO NOT SUBSTITUTE PARTS OR MODIFY INSTRUMENT
Because of the danger of introducing additional hazards, do not substitute parts or perform unauthorized modifications to the instrument. Return the instrument to a Hewlett-Packard Sales and Service Office for service and repair to ensure the safety features are maintained.

DANGEROUS PROCEDURE WARNINGS
WARNINGs, such as the example below, precede potentially dangerous procedures throughout this manual. Instructions contained in the warnings must be followed.

WARNING

DANGEROUS VOLTAGES, CAPABLE OF CAUSING DEATH, ARE PRESENT IN THIS INSTRUMENT. USE EXTREME CAUTION WHEN HANDLING, TESTING, AND ADJUSTING THIS INSTRUMENT.

SAFETY SYMBOLS

General Definitions of Safety Symbols Used On Equipment or In Manuals.

⚠	Instruction manual symbol: the product will be marked with this symbol when it is necessary for the user to refer to the instruction manual in order to protect against damage to the instrument.
ϟ	Indicates dangerous voltage (terminals fed from the interior by voltage exceeding 1000 volts must be so marked).
⏚ OR ⏚	Protective conductor terminal. For protection against electrical shock in case of a fault. Used with wiring terminals to indicate the terminal which must be connected to ground before operating equipment.
⏚	Low-noise or noiseless, clean ground (earth) terminal. Used for a signal common, as well as providing protection against electrical shock in case of fault. A terminal marked with this symbol must be connected to ground in the manner described in the installation (Operating) manual, and before operating the equipment.
⏚ OR ⊥	Frame or chassis terminal. A connection to the frame (chassis) of the equipment which normally includes all exposed metal structures.
∼	Alternating current (power line).
⎓	Direct current (power line).
≂	Alternating or direct current (power line).
WARNING	A **WARNING** denotes a hazard. It calls attention to a procedure, practice, condition or the like, which, if not correctly performed or adhered to, could result in injury or death to personnel.
CAUTION	A **CAUTION** sign denotes a hazard. It calls attention to a procedure, practice, condition or the like, which, if not correctly performed or adhered to, could result damage to or destruction of part or all of the product.
NOTE	A **NOTE** denotes important information. It calls attention to a procedure, practice, condition or the like, which is essential to highlight.

TABLE OF CONTENTS

General Information

Disassembly Procedures

Overall Troubleshooting

Control Unit Service Sheets

Measurement Unit Bottom-Chassis Service Sheets

Measurement Unit Top-Chassis Service Sheets

General Parts Listing

Appendixes

GENERAL INFORMATION

GENERAL INFORMATION

WARNING

SERVICE INFORMATION IN THIS MANUAL IS FOR USE OF TRAINED SERVICE PERSONNEL. TO AVOID ELECTRICAL SHOCK, DO NOT PERFORM ANY SERVICE PROCEDURES IN THIS MANUAL UNLESS YOU ARE QUALIFIED.

INTRODUCTION

This manual provides the service information for the HP Model 4195A Network/Spectrum Analyzer. In this section, the information required to use this manual and the information you need to know before you start to service the HP 4195A; manual organization, safety considerations, recommended test equipment, disassembly procedures and so on, are described.

MANUAL ORGANIZATION

This manual consists of six sections and the appendixes. The following paragraphs give a summary of the four sections except for this section, and appendixes.

DISASSEMBLY PROCEDURES

Describes the disassembly procedures for printed circuit boards which cannot be removed easily.

OVERALL TROUBLESHOOTING:

The Overall Troubleshooting is used to isolate and locate the faulty board. Included is the theory of operation, overall block diagram, troubleshooting flow, etc.

SERVICE SHEETS:

Service Sheets are used to troubleshoot the faulty board to the component level. Included are circuit descriptions, troubleshooting information, parts list, schematic diagram, etc. The Service Sheets are divided into three blocks, control unit, measurement unit top/bottom. Each service sheet is layed out so you can read the circuit description while referring the schematic diagram. When the schematic diagram is folded out, it will be on the right hand side of the instructions.

CONTROL UNIT:	A1-A10, A12-A17
MEASUREMENT UNIT BOTTOM CHASSIS:	A20-A30, A128, A130
MEASUREMENT UNIT TOP CHASSIS:	A31-A34, A40, A43-A48, A50-A52, A60

GENERAL PARTS LISTING:

The general parts listing provides the ordering information, mechanical parts/cables/wire assembly list, and so on. This section will help you to locate parts other than the board assemblies, and to find the part numbers.

APPENDIXES:

APPENDIX A: Manual Changes
Contains the information for adapting this manual to the instruments manufactured before the printing of this manual

APPENDIX B: Service Function Documentation
Explains the HP 4195A Service Functions

APPENDIX C: Major Assembly and Component Locations
Shows the board assembly locations

REFERENCE DESIGNATIONS

Assemblies such as printed circuit boards are assigned numbers in sequence, A1, A2, and so on, as the reference designator. Subassemblies within an assembly are given a subordinate A-number and a subassembly number. For example, the Fractional N Loop API Source Board Assembly on A10 Frequency Generator Board Assembly is designated as A10A1.

SCHEMATIC DIAGRAM SYMBOLS

Figure 1 shows the symbols used on the schematic diagram in this manual, and its description.

↯	**DANGEROUS VOLTAGE, EXCEEDS 1000 VOLTS**
○	Knob control
⊘	Screwdriver adjustment
— — —	Circuit assembly borderline.
*	Asterisk denotes a factory selected value. Value shown is typical, part may be omitted.
▯*	Bead inductor.
⌀	Circuit board pattern inductance
———	Heavy line indicates main signal path.
— — —	Heavy dashed line indicates main feedback path.
CW	Wiper moves towards CW with clockwise rotation of control (as viewed from shaft or knob).
1	Numbered test point. Measurement aid provided.
947	Denotes wire color code. Code used is the same as the resistor color code (e.g., 9.4.7 denotes white/yellow/violet).
▭	Enclosed front panel designations.
⸢ ⸣	Shielded area
⏚	Indicates direct conducting connection to earth.
⊥	Indicates conducting connection to chassis or frame.
⏚	Indicates circuit common connection.

Figure 1. Schematic Diagram Symbols

SAFETY CONSIDERATIONS

This manual contains **WARNINGs** and **CAUTIONs** which must be followed for your safety and to avoid damaging the equipment, although this instrument has been designed in accordance with international safety standards. The instrument and this manual will show the symbols attached for safety, each meaning of the safety symbols are shown in page **v** of this manual.

AFTER SERVICE SAFETY CHECKS

WARNING

WHENEVER IT APPEARS LIKELY THAT SAFETY PROTECTIVE PROVISIONS HAVE BEEN IMPAIRED, THE APPARATUS SHALL BE MARKED AS INOPERATIVE AND SHOULD BE SECURED AGAINST ANY UNINTENDED OPERATION. THE PROTECTION PROVISIONS WILL HAVE LIKELY BEEN COMPROMISED IF, FOR EXAMPLE:

-- **INSTRUMENT SHOWS VISIBLE DAMAGE.**

-- **THE INSTRUMENT FAILS TO PERFORM THE INTENDED MEASUREMENT.**

-- **THE UNIT HAS UNDERGONE PROLONGED STORAGE UNDER UNFAVORABLE CONDITIONS.**

-- **THE INSTRUMENT WAS SEVERELY STRESSED IN TRANSPORT.**

Perform the following four checks to verify the safety of the HP 4195A (these checks may also be used to check for safety after troubleshooting and repair).

1. Visually inspect the interior of instrument for any signs of abnormal internally generated heat, such as discolored printed circuit boards or components, damaged insulation, or evidence of arcing. Determine the cause and repair.

2. Use an ohmmeter capable of accurately measuring 0.5 Ω to check the resistance from instrument enclosure to the power cord's ground pin. The resistance must be less than 0.5 Ω. Flex the power cord while making this measurement to determine if any intermittent discontinuities exist.

3. Disconnect the instrument from its power source. Turn ON the power switch. Tie the line and neutral pins of the power connector together and check the resistance between them and the instrument's enclosure. The minimum acceptable resistance is 2 MΩ. Find and replace any component which causes the instrument to fail this test.

4. Verify that the correct fuse is installed.

RECOMMENDED TEST EQUIPMENT

The test equipment required for servicing the HP 4195A are listed in the HP 4195A Maintenance Manual. The table includes the type of instrument required, critical specifications, and model numbers for the recommended equipment. If the recommended models are not available, equipment which meets or exceeds all critical specifications may be substituted.

SERVICE ACCESSORIES

Several accessories are required to service the HP 4195A. Table 1 lists the service accessories for the HP 4195A.

Table 1. Service Accessories

Description	Part Number
Extender Board (for A1, A2 board)	16349-66501
Extender Board (for A3)	16349-66502
Extender Board (for A6, A7, A8 board)	16349-66503
Extender Board (for A9, A10 board)	04195-66590
Template, CRT Alignment	04195-69051
CRT Section Extension Cable	16349-61604
Interconnection Cable, 9pin	16349-61601
Interconnection Cable, 50pin	16349-61602
Interconnection Cable, BNC(m)	16349-61603
Align Tool, HEX	8710-1830

DISASSEMBLY PROCEDURES

DISASSEMBLY PROCEDURES

INTRODUCTION

This section describes the disassembly procedures for the following list of printed circuit boards, and the flexible disc drive. The other printed circuit boards and assemblies are easily accessed without using special procedures.

Control Unit:
- A13 Control Unit Keyboard Assembly
- A4 CRT Deflection Amplifier Board Assembly
- A5 Video Amplifier Board Assembly
- A17 CRT Socket Board Assembly

Measurement Unit:
- A25 High Frequency Multiplexer Board Assembly
- A50 Receiver Circuit Control Board Assembly
- A52 Measurement Unit Keyboard Assembly

CONTROL UNIT

CONTROL UNIT FRONT PANEL REMOVAL:

1. Remove the screws indicated in Figure 1 (screws 1, 2, 4, 5, 6, 10, and 11 of the 12 screws shown in Figure 1).

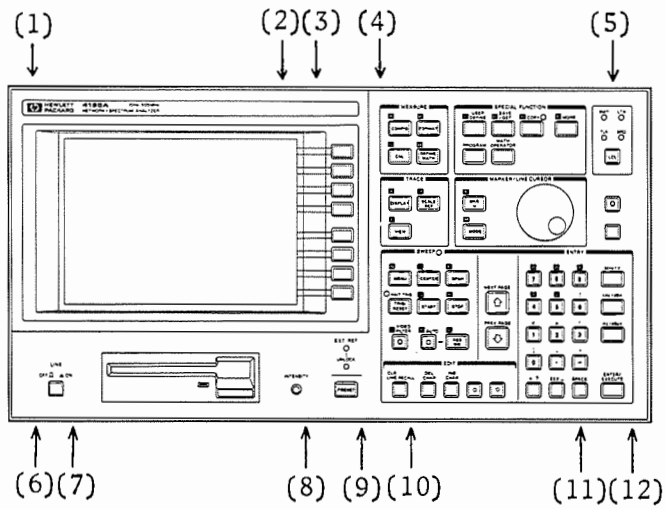

Figure 1. Front Panel Screws Position

2. Remove the control unit front panel from the front frame, as shown in Figure 2.

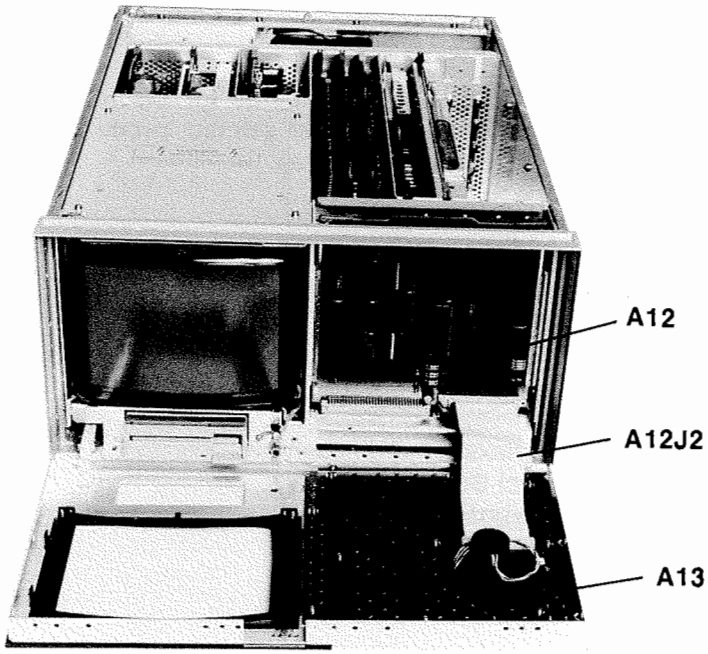

Figure 2. Control Unit Front Panel Removal

3. Disconnect the flat cable from the A12J2 socket on the A12 board.

A13 CONTROL UNIT KEYBOARD REMOVAL:

1. Remove the Control Unit front panel by using the CONTROL UNIT FRONT PANEL REMOVAL procedure.

2. Loosen the two hex setscrews which holds the knob, and remove the knob from the shaft of the RPG on the A13 board.

3. Unscrew the screws on the A13 board, and remove the A13 board.

CRT SECTION REMOVAL:

1. Remove the control unit top cover.

2. Remove the control unit front panel, using the CONTROL UNIT FRONT PANEL REMOVAL procedure.

3. Unscrew the four screws located on the top of the CRT section.

4. Unscrew the two screws which hold the INTENSITY potentiometer.

5. Slide the CRT section toward the front panel so that the flat cable connected to the A4J3 connector can be disconnected, and disconnect the flat cable.

6. Carefully pull the CRT assembly out.

A4 CRT DEFLECTION AMPLIFIER BOARD REMOVAL:

1. Remove the CRT section from the control unit, using the CRT SECTION REMOVAL procedure.

2. Remove the top and bottom panels from the CRT section.

3. Unscrew the four screws which hold the panel (1) indicated in Figure 3, and remove the panel from the CRT section.

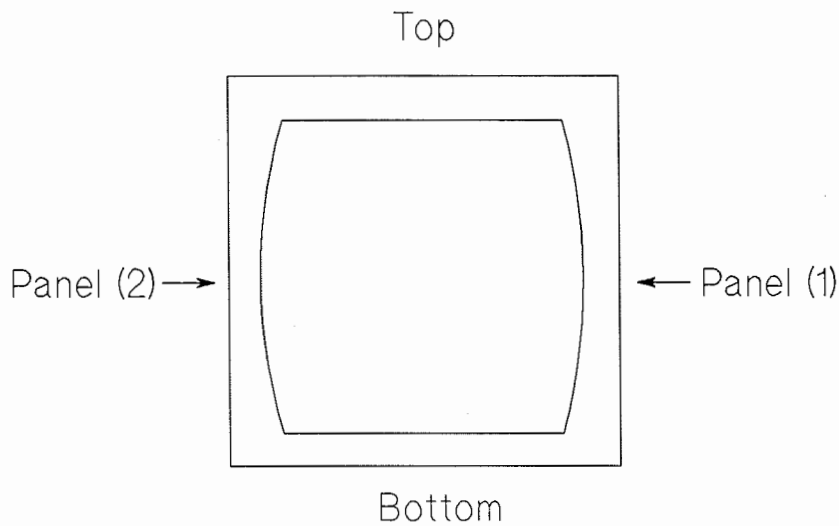

Figure 3. CRT Section Panel Position

4. Unscrew the six screws which hold the A4 board.

5. Unscrew the four screws which hold the panel (2) indicated in Figure 3, and remove the panel from the CRT section.

6. Unscrew the two screws which hold the rear panel of the CRT section, and remove the rear panel from the CRT section.

7. Disconnect the wire assembly from the A4J2 connector.

8. Unscrew the three screws on the A17 board, and disconnect the A17 board from the CRT, as shown in Figure 4.

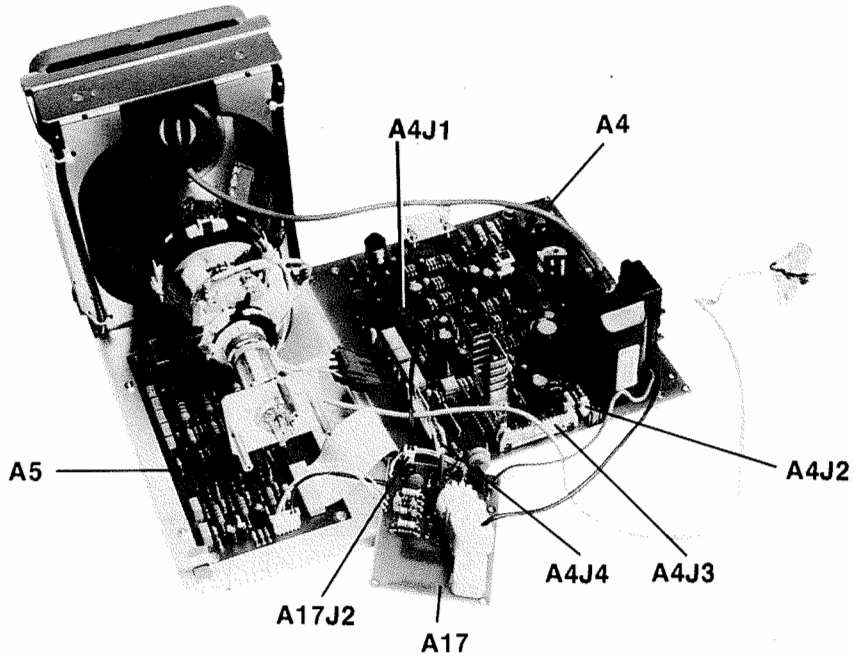

Figure 4. CRT Section Disassembly

9. Disconnect the wire assembly from the A17J2 connector.

10. Disconnect the flat cable from the A4J4 connector, and the wire assembly from the A4J1 connector, and remove the A4 board.

A5 CRT VIDEO AMPLIFIER BOARD REMOVAL:

1. Remove the CRT section from the control unit using the CRT SECTION REMOVAL procedure.

2. Remove the top and bottom panels from the CRT section.

3. Unscrew the four screws which hold the panel (1) indicated in Figure 3, and remove the panel from the CRT section.

4. Unscrew the screws which hold the A5 board.

5. Disconnect the wire assemblies from the A5J1, A5J3 and A5J4 connectors, and disconnect the flat cable from the A4J4 connector.

6. Remove the A5 board.

A17 CRT SOCKET BOARD REMOVAL:

1. Remove the CRT section from the control unit using the CRT SECTION REMOVAL procedure.

2. Remove the top and bottom panels from the CRT section.

3. Unscrew the two screws which hold the rear side of the panel (1) indicated in Figure 3.

4. Unscrew the two screws which hold the rear side of the panel (2) indicated in Figure 3.

5. Unscrew the two screws on the rear panel of the CRT section, and remove the rear panel.

6. Disconnect the wire assemblies from the A4J2 and A5J1 connectors.

7. Unscrew the three screws which hold the A17 board to the CRT, and disconnect the A17 board from the CRT.

8. Disconnect the wire assembly from the A17J2 connector, and remove the A17 board.

FLEXIBLE DISC DRIVE REMOVAL:

1. Remove the control unit bottom cover.

2. Disconnect the flat cable from the A16J1 connector.

3. Disconnect the flat cable from the flexible disc drive.

4. Unscrew the screws which hold the A16 board, and remove the A16 board from the control unit.

5. Unscrew the four screws indicated in Figure 5.

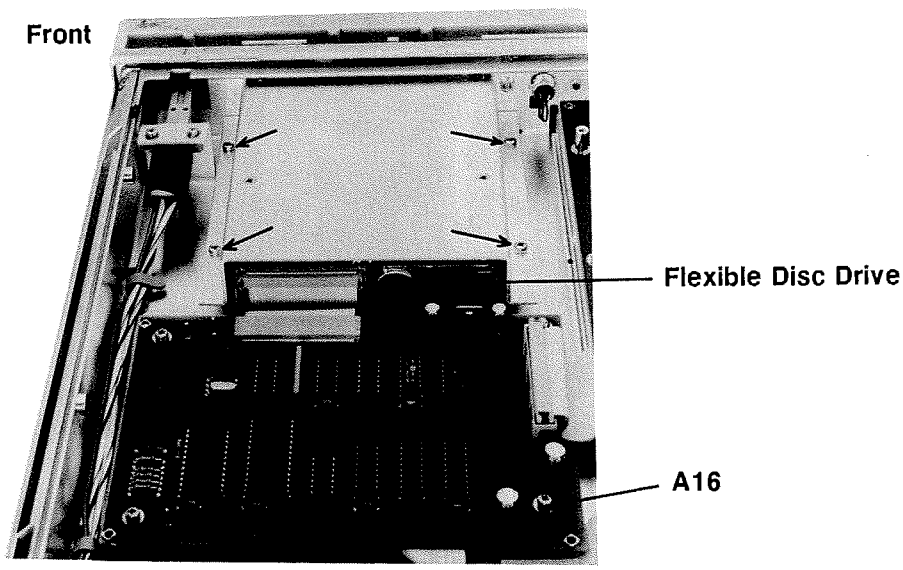

Figure 5. Flexible Disc Drive Removal

5. Remove the chassis plate with the flexible disc drive.

6. Unscrew the four screws which fixes the plate to the flexible disc drive.

MEASUREMENT UNIT

A25 HIGH FREQUENCY MULTIPLEXER BOARD REMOVAL:

1. Disconnect the eight coaxial cables from the A25 board section.

2. Disconnect the wire assemblies from the A21J25A, A21J25B, A21J25C, and A21J25D connectors.

3. Unscrew the three screws for the two angles which hold the A25 board section, and take out the A25 board section with the angles from the measurement unit.

4. Unscrew and remove the two screws which is used to hold the A25 board section between the two angles. The A25 board section can be separated to the four A25 blocks, and three shield plates, as shown in Figure 6. The A25 block is held by the four shield plates.

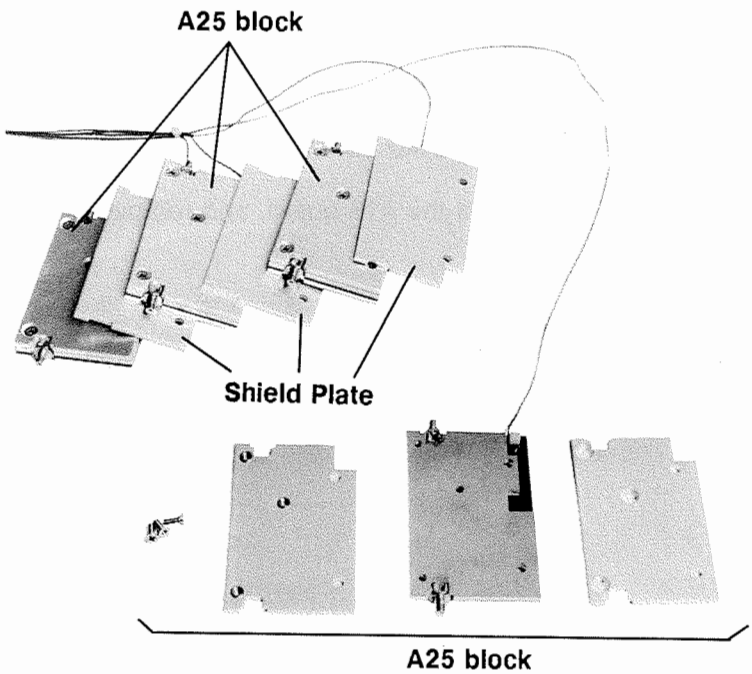

Figure 6. A25 Board Section Disassembly

5. Unscrew the three screws which is used to hold the A25 board between the four shield plates, and remove the two shield plate.

6. Remove the two shield plates soldered on the A25 board.

A50 RECEIVER CIRCUIT CONTROL BOARD REMOVAL:

1. Remove the top cover, bottom cover and side covers from the measurement unit.

2. Disconnect the coaxial cable "5" from the A60J2 connector.

3. Disconnect the coaxial cable "4" from the A20J1 connector.

4. Disconnect the coaxial cable "3" from the A130J4 connector.

5. Disconnect the coaxial cable "2" from the A33J1 connector.

6. Disconnect the wire assembly from the A51J5 connector.

7. Disconnect the flat cable from the A21J2 connector.

8. Remove the thirteen screws indicated in Figure 7, and remove the measurement unit rear panel.

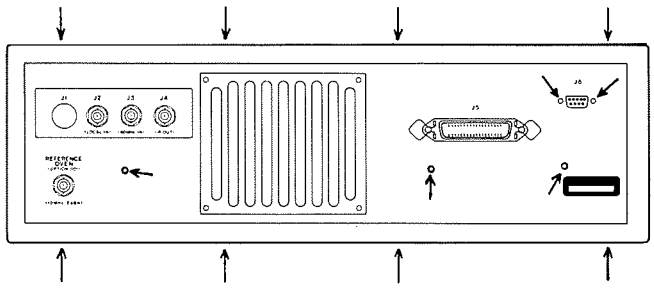

Figure 7. Measurement Unit Rear Panel Removal

9. Disconnect a flat cable, and a coaxial cable from the A51 board, and disconnect the two wire assemblies from the A51J31, and A51J32 connectors.

10. Unscrew the screws on the A51 board, and remove the A51 board as shown in Figure 8.

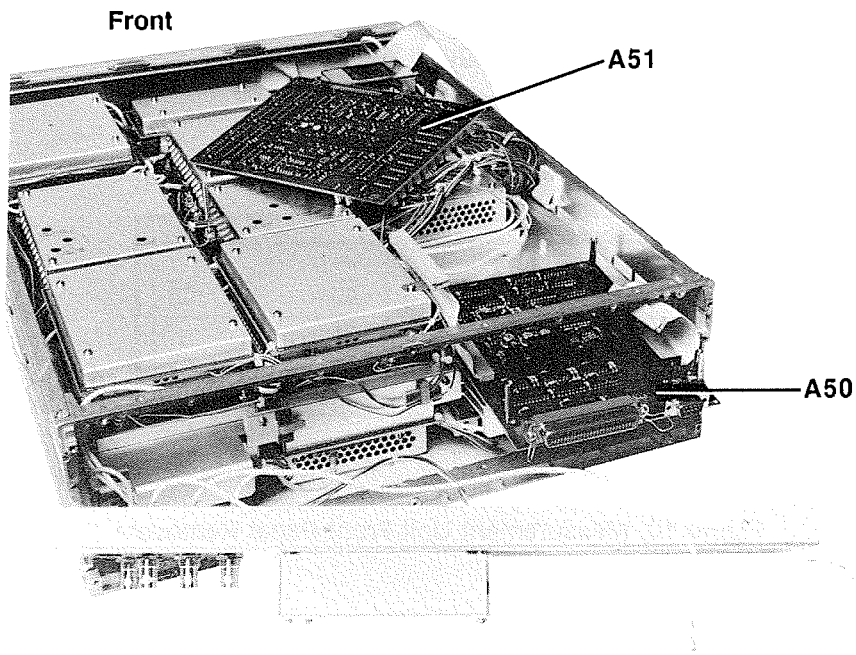

Figure 8. A50, A51 Boards Removal

11. Disconnect the flat cable from the A50J5 connector.

12. Unscrew the screws on the A50 board, and pull out the A50 board toward the rear panel.

A52 MEASUREMENT UNIT KEYBOARD REMOVAL:

1. Remove the top cover, the bottom cover, and the lock feet from the measurement unit.

2. Disconnect the four semi-rigid coaxial cables indicated in Figure 9 (1) from the A27, A28, A29, and A30 board assemblies.

3. Disconnect the two semi-rigid coaxial cables indicated in Figure 9 (2) from the A47 and A48 board assemblies.

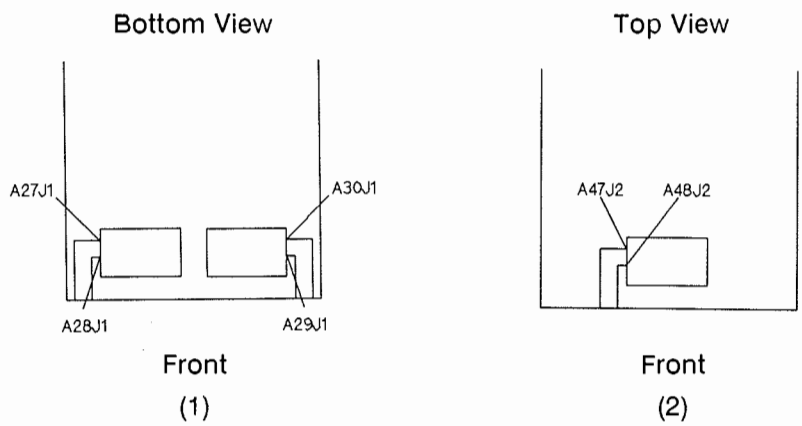

Figure 9. Measurement Unit Front Panel Cable Removal

4. Unscrew the screws indicated in Figure 10, and remove the front panel assembly from the measurement unit.

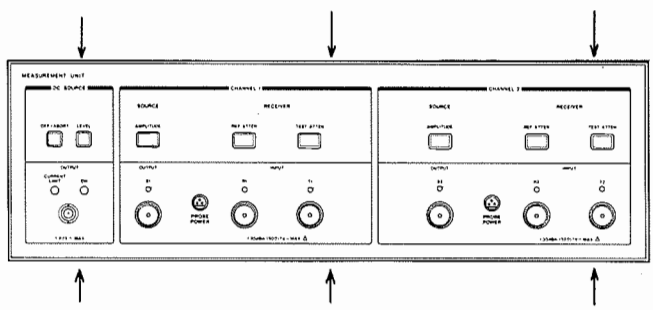

Figure 10. Measurement Unit Front Panel Removal

5. Unscrew the screws on the A52 board, and disconnect the flat cable from the A52J1 connector.

6. Remove the A52 board from the measurement unit front panel.

OVERALL TROUBLESHOOTING

OVERALL TROUBLESHOOTING

INTRODUCTION

This section provides the information necessary to troubleshoot and isolate HP 4195A Network/Spectrum Analyzer problems down to the faulty PC board assembly.

The HP 4195A's basic measurement principle is described in the Measurement Principle paragraph. You will need to know the basic measurement principle to understand the block diagram discussion. The HP 4195A's circuit operation is described in the Overall Block Diagram paragraph. Understanding the function of the circuit on each PC board and the part each circuit plays in the total instrument will help you to isolate problems down to the faulty PC board assembly. Troubleshooting tips are given in the Hints paragraph.

MEASUREMENT PRINCIPLE

The measurement principle used in the HP 4195A will be discussed at the block diagram level.

The HP 4195A's circuit configuration will be in one of two states depending on the measurement configuration selected. One circuit configuration is used for SPECTRUM measurements and another is used for NETWORK, S-PARAMETERs, and IMPEDANCE measurements. The only difference between the NETWORK, S-PARAMETERs, and IMPEDANCE measurement configurations is in the calculations performed.

NOTE

In the following description, the term "NETWORK configuration" is used to represent the configuration used for other than SPECTRUM measurements.

MEASUREMENT CIRCUIT

There are four input connectors and two output connectors on the HP 4195A's front panel, these inputs and outputs are multiplexed to the single receiver and signal source circuit.

RECEIVER PRINCIPLE

In the NETWORK configuration, the receiver selects and sequentially reads two of its four inputs to measure the vector amplitude ratio between the signals at the two selected inputs.

In the SPECTRUM measurement configuration, one of the four receiver inputs is selected as the receiver input used to measure the absolute amplitude of the input signal measured. If the selected resolution bandwidth is narrower than the frequency difference between two sequential measurement points (the current measurement point and the previous measurement point) the receiver will perform a multi-point measurement to cover frequency points in between the two points to make up for the resolution bandwidth being too narrow.

The input signal is mixed with a local oscillator signal to produce an IF signal -- the same technique as used in superheterodyne radio receivers. The IF signal retains the input signal's amplitude and phase information.

The IF signal is phase detected, using two reference signals which are 90° out of phase to each other, and converted to a dc signal with superimposed ripple. The two detected signals represent the respective magnitudes of the 0° and 90° components of the input signal. The detected dc voltages are converted to digital values.

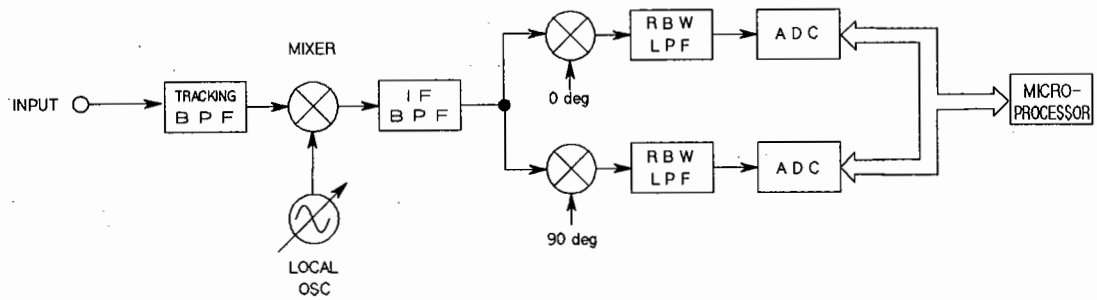

In the NETWORK configuration two measurements are taken and converted to digital values for each Reference and Test signal, the four values are then used to calculate the amplitude ratio (gain or attenuation) and the phase difference. The calculations are performed using the following equations. (If the LOG scale (dB) is selected or a group delay measurement is selected, the logarithmic calculations, etc., are performed by the microprocessor.)

$$(VR_0 + jVR_{90}) = (T_0 + jT_{90}) \div (R_0 + jR_{90})$$

$$(\text{Amplitude Ratio}) = \sqrt{(VR_0{}^2 + VR_{90}{}^2)}$$

$$(\text{Phase Difference}) = \tan^{-1} (VR_0{}^2 \div VR_{90}{}^2)$$

Where, VR_0 and VR_{90} are 0° and 90° components of vector ratio, respectively. T_0 and T_{90} are the respective test input digital values, and R_0 and R_{90} are the digital values of the respective reference inputs. The imaginary number unit is represented by j instead of i, as i might be mistaken for current.

In the SPECTRUM measurement configuration, the amplitude of the input signal in linear scale units is calculated by taking the square root of the sum of the squares of these two digital values. If logarithmic units (dBm or dBμV) are selected, the microprocessor performs logarithmic calculations.

$$\text{Level (V)} = \sqrt{(V_0{}^2 + V_{90}{}^2)}$$

Where, V_0 and V_{90} are the respective 0° and 90° components of the vector voltage values.

NOTE

The major differences between the receiver circuit used in the HP 4195A and that used in conventional network or spectrum analyzers are:

- LOG Conversion: Conventional network or spectrum analyzers use an analog LOG amplifier circuit. The HP 4195A calculates the LOG conversions instead of using a LOG amplifier.

- Resolution Bandwidth Selection: Conventional Network or Spectrum analyzers have IF filters in the ac (RF) signal path. The HP 4195A uses low-pass filters in the phase detected dc signal path (phase detected signal contains ripple).

SIGNAL SOURCE PRINCIPLE

The HP 4195A generates its ac output signal by mixing an IF signal with a local oscillator signal -- similar to the technique used in the receiver. Since the same local oscillator signal is used in the receiver circuit, the signal source frequency tracks the receiver frequency exactly. The output signal source level is proportional to the IF signal level.

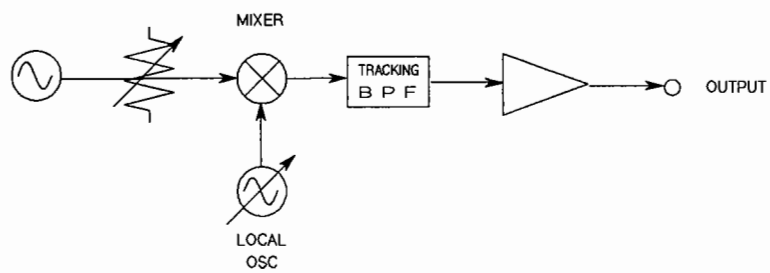

FREQUENCY CONVERSION

The general frequency conversion technique used in the HP 4195A is as follows.

All necessary frequencies used in the HP 4195A are synthesized from the 80 MHz reference frequency generator signal.

The first IF local oscillator (LO) signal is generated using a phase locked loop (PLL) synthesizer whose output frequency is variable from 233.333333333 MHz to 413.333333333 MHz with a resolution of 1 mHz. The PLL's reference signal frequency is a 100 kHz signal divided down from the 80 MHz reference. The first IF frequency is 246.666666667 MHz.

The second IF LO frequency is 160 MHz, obtained by doubling the 80 MHz reference frequency. The second IF frequency is 86.666666667 MHz.

The third IF LO frequency is 80 MHz and the second IF frequency is 6.666666667 MHz.

The HP 4195A uses one of the following three frequency conversion methods depending on the measurement frequency.

Frequency Range: 0.001 Hz to 149.999999999 MHz

The input frequency is subtracted from the frequency of the first IF LO to produce the 246.666666667 MHz first IF signal.

First IF = First Local - Input

The second 160 MHz IF LO frequency is subtracted from the 246.666666667 MHz first IF frequency to produce the 86.666666667 MHz second IF signal.

Second IF = First IF - Second Local

The 80 MHz third IF LO frequency is subtracted from the 86.666666667 MHz second IF frequency to produce the 6.666666667 MHz third IF signal.

Third IF = Second IF - Third Local

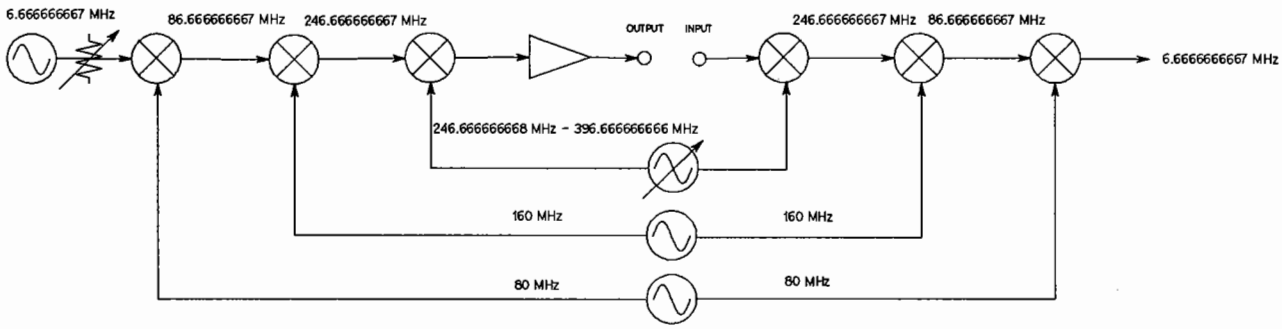

Frequency Range: 150 MHz to 319.999999999 MHz

The input frequency is subtracted from the first IF LO frequency to produce the 86.666666667 MHz second IF signal.

Second IF = First Local - Input

The 80 MHz third IF LO frequency is subtracted from the 86.666666667 MHz second IF frequency to produce the 6.666666667 MHz third IF signal.

Third IF = Second IF - Third Local

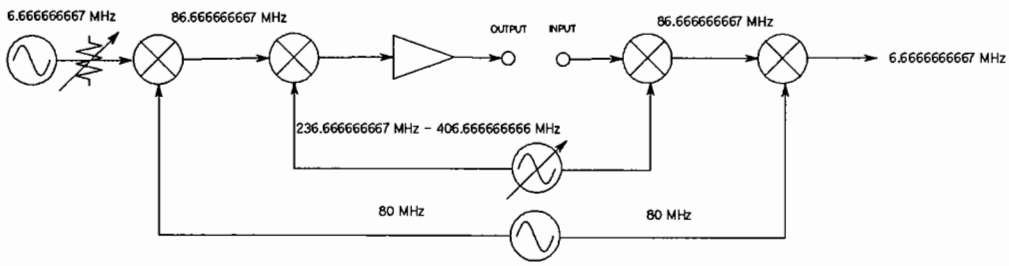

Frequency Range: 320 MHz to 500 MHz

The first IF LO frequency is subtracted from the input frequency to produce the 86.666666667 MHz second IF signal.

Second IF = Input - First Local

The 80 MHz third IF LO frequency is subtracted from the 86.666666667 MHz second IF frequency to produce the 6.666666667 MHz third IF signal.

Third IF = Second IF - Third Local

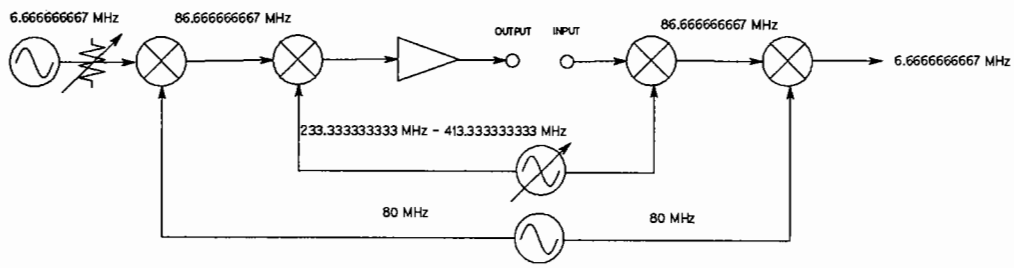

OVERALL BLOCK DIAGRAM

The overall block diagram of the HP 4195A's analog circuits, digital circuits, and display circuits (the last sheets in this tab section) will give you the information you will need to isolate a problem down to the defective PC board assembly. Circuit operation is explained at the functional block level. Refer to the block diagrams while reading the following descriptions to learn how the HP 4195A's circuits work.

NOTE

The switches shown in Figure 1 are set to measuring a 500 MHz signal.

FREQUENCY GENERATOR/LOCAL SIGNAL GENERATOR CIRCUIT

The frequency generator/LO signal generator circuits includes boards A10, A31, A32, A33, A34 and part of the A130 board. These circuits provide all of the HP 4195A's clock and RF signals.

A10

The 80 MHz voltage controlled crystal oscillator's (VCXO) output frequency can be shifted slightly by an external lock signal input through the **EXT REFERENCE** connector on the HP 4195A's rear panel. The 80 MHz signal is connected to the measurement unit (lower chassis) through the rear panel **J3** connectors.

The frequency dividers divide the 80 MHz signal from the 80 MHz VCXO to 20 MHz (microprocessor clock), to 10 MHz (**10MHz OUTPUT** rear panel output), and to 100 kHz (PLL synthesizer reference), etc.

The fractional N phase locked loop (PLL) synthesizer produces the 233.333333333 MHz to 413.333333333 MHz local oscillator signal with a resolution of 1 mHz. The synthesizer's output frequency is controlled by digital control signals from the A8 board. The following list gives some examples of Measurement versus VCO frequencies. The synthesizer output signal is connected to the measurement unit (lower chassis) through the HP 4195A's rear panel **J2** connectors.

Measurement Frequency	VCO Frequency
0.000 000 001 MHz	246.666 666 668 MHz
0.000 010 000 MHz	246.666 676 667 MHz
3.333 333 333 MHz	250.000 000 000 MHz
5.000 000 000 MHz	251.666 666 667 MHz
53.333 333 333 MHz	300.000 000 000 MHz
100.000 000 000 MHz	346.666 666 667 MHz
103.333 333 333 MHz	350.000 000 000 MHz
149.999 999 999 MHz	396.666 666 666 MHz
150.000 000 000 MHz	236.666 666 667 MHz
163.333 333 333 MHz	250.000 000 000 MHz
200.000 000 000 MHz	286.666 666 667 MHz
213.333 333 333 MHz	300.000 000 000 MHz
319.999 999 999 MHz	406.666 666 666 MHz
320.000 000 000 MHz	233.333 333 333 MHz
336.666 666 667 MHz	250.000 000 000 MHz
350.000 000 000 MHz	263.333 333 333 MHz
386.666 666 667 MHz	300.000 000 000 MHz
500.000 000 000 MHz	413.333 333 333 MHz

A33, A34

The amplifiers and filters on the A33 and A34 boards amplify and filter the LO signal from the PLL synthesizer before it is fed into the first IF mixers.

A130, A32

The frequency doubler on the A130 board doubles the 80 MHz VCXO frequency to 160 MHz. The amplifiers on the A32 board amplify the LO signal from the doubler and feed it to the second IF mixers.

A130, A31

The bandpass filter on the A130 board filters out spurious signals produced by the 80 MHz VCXO. The amplifiers on the A31 board amplify and buffer the local oscillator signal from the VCXO and feed it to the third IF mixers.

SIGNAL SOURCE CIRCUIT

The signal source circuit which provides the HP 4195A's ac (RF) test signal outputs is contained on the A40, A43, A44, A45, A46, A47, A48 boards and on part of the A130 board assembly.

A130

The ÷12 divider provides the 6.666666666 MHz signal to the signal level vernier circuit which chops the dc voltage to provide a variable amplitude ac signal. The dc voltage is produced by a D-A converter on the A50 board. When the source frequency is ≥ 10 MHz, the dc voltage is compared with the Auto Level Controller's (ALC) feedback signal from the A44 board and the comparator output is fed to the signal level vernier to maintain a constant

amplitude level output -- Closed loop operation. When the source frequency is ≤ 10 MHz or when in the power (OSC level) sweep mode, the dc voltage is fed directly to the signal level vernier to control the ac output amplitude -- Open loop operation.

A40

The third IF converter converts the signal level vernier output to the second IF frequency signal (86.666666666 MHz). The second IF converter converts the third IF convertor's output to the first IF frequency (246.666666666 MHz).

A43

The first IF converter converts the IF signal frequency to the test signal frequency. The first IF convertor's input signal is selected by a digital control circuit and diode switching. When the output frequency is < 150 MHz, the second IF converter output is connected to the first IF converter. When the output frequency is ≥ 150 MHz, the third IF converter's output is switched to the first IF converter.

The first IF converter output is amplified by an HF amplifier and an LF amplifier. The HF amplifier output is connected to A44 board, and the LF amplifier output is fed to A45 (S2 power amplifier) or A46 (S1 power amplifier) depending on the source selected.

A44

The filters on the A44 board are tracking filters for the HF amplifier output.

When the test signal frequency is < 10 MHz, the input is terminated into a 50 Ω load. When the test signal frequency is ≥ 10 MHz and < 150 MHz, the input is filtered by a lowpass filter. When the test signal frequency is ≥ 150 MHz and < 225 MHz, the input is filtered by the low band voltage tunable bandpass filter (VTF-L). When the test signal frequency is ≥ 225 MHz and < 340 MHz, the input is filtered by the middle band voltage tunable bandpass filter (VTF-M). When the test signal frequency is ≥ 340 MHz, the input is filtered by the high band voltage tunable bandpass filter (VTF-H). The VTF filters track the signal source and are controlled by the dc control voltages generated on the A51 board.

The filters' outputs are amplified and fed to A45 (S2 power amplifier) or to A46 (S1 power amplifier) depending on the source selection setting. The amplified signal is also rectified and filtered to be used as the Auto Level Controller (ALC) feedback signal.

A45, A46

The electrically and physically identical A45 and A46 boards are the respective power amplifiers for S2 and S1. The input to these boards is digitally selected using diode switching. When the output frequency is < 10 MHz, A43 supplies the input. When the output frequency is ≥ 10 MHz, A44 supplies the input.

A47, A48

The A47 and A48 boards are the respective output attenuators for S2 and S1, and they are electrically and physically identical. Each board has 5 dB, 10 dB, and 20 dB attenuators which can be switched in series. The attenuation is determined by the signal source amplitude setting as listed below.

Signal Source Amplitude (dBm)	5 dB ATT	10 dB ATT	20 dB ATT
+5.0 to +15.0	off	off	off
0.0 to +4.9	ON	off	off
-5.0 to -0.1	off	ON	off
-10.0 to -5.1	ON	ON	off
-15.0 to -10.1	off	off	ON
-20.0 to -15.1	ON	off	ON
-25.0 to -20.1	off	ON	ON
-50.0 to -25.1	ON	ON	ON

RECEIVER CIRCUIT

The receiver circuit is contained on the A9, A20, A21, A22, A23, A24, A25, A26, A27, A28, A29, A30, and A128 PC boards.

A27, A28, A29, A30

The electrically and physically identical A27, A28, A29, and A30 boards are the respective attenuators for inputs R2, T2, R1, and T1. Each of these attenuator boards contains two 10 dB attenuators and a 20 dB attenuator which are switched in series with the input line to set the attenuation. The attenuation is controlled using front panel **RECEIVER ATTEN** keys. Each board has highpass and lowpass filters to split the input signal depending on the frequency of the input signal. After the input signal passes through the attenuators it is fed to high and low pass filters via a power splitter. The corner frequency for both filters is 10 MHz. Input frequencies < 10 MHz are fed to the A26 board.

A26

There are four input channel lowpass filters and switches in the front end of the A26 board. The higher frequency residual components are filtered out and one of four input signals is selected by the switches. These switches operate when the measurement frequency is < 10 MHz. The selected low frequency signal is buffered the an amplifier on the A26 board. The LF overload detector rectifies the buffered input signal and outputs the LF-OVLD signal when an excessive amplitude input signal is applied to the input.

A25

The A25 assembly contains four (multi-stage) diode switches to select one of four input signals from A27, A28, A29, or A30 attenuators' high frequency path when the frequency being measured is ≥ 10 MHz.

A24

The selected high frequency signal from the A25 assembly is buffered by an amplifier on the A24 board. The HF overload detector rectifies the buffered input signal and outputs the HF-OVLD signal if an excessive amplitude signal is applied to the input.

A23

Tracking filters on the A23 board are used to filter input signal frequencies ≥ 10 MHz.

When the test signal frequency is ≥ 10 MHz and < 150 MHz, the input is filtered by a low-pass filter. When the test signal frequency is ≥ 150 MHz and < 225 MHz, the input signal is filtered by the low band voltage tunable bandpass filter (VTF-L). When the test signal frequency is ≥ 225 MHz and < 340 MHz, the input signal is filtered by the middle band voltage tunable bandpass filter (VTF-M). When the test signal frequency is ≥ 340 MHz, the input is filtered by the high band voltage tunable bandpass filter (VTF-H). VTF's are input tracking filters used toeliminate image frequency components from the input signal.

A22

When the measurement frequency is < 10 MHz, the input signal is mixed with the VCO signal in the LF mixer and is filtered by a 246.67 MHz bandpass filter. When the measurement frequency is ≥ 10 MHz, the input signal is mixed with the VCO signal in the HF mixer. When the frequency is ≥ 10 MHz and < 150 MHz, the mixed signal is filtered by a 246.67 MHz bandpass filter. When the frequency is > 150 MHz, the mixed signal is filtered by a 86.67 MHz bandpass filter.

A128

The A128 board is a 400 MHz lowpass filter used to eliminate unwanted frequency components from the IF signal generated on the A22 board. The signal path through the A128 board is selected only for measurement frequencies < 150 MHz.

A21

The first IF signal from A128 is converted to the second IF signal on the A21 board. The signal path through the A21 board is used only for measuring frequencies < 150 MHz.

A20

When the measurement frequency is < 150 MHz, a diode switch on the A20 board connects A21's output to the A20 third IF converter. When the frequency is ≥ 150 MHz, a diode switch on the A20 board feeds A22's output to the A20 third IF converter.

Selectable gain amplifiers follow the 6.97 MHz Bandpass filter on the A20 frequency converter. The first amplifier's selectable gains are 0 dB and 20 dB. The second amplifier's selectable gains are 0 dB and 10 dB.

In the network configuration, the 0/20 dB amplifier's gain is controlled automatically depending on the input level detected by the A-D converter, and the 0/10 dB amplifier's gain is selected by the IF range (0 dB for Normal and 10 dB for High Sensitivity) selection. In the spectrum configuration, the amplifiers' gains are selected by the IF range selection (10 dB for Normal, 20 dB for Low Distortion, and 30 dB for High Sensitivity).

The third IF output is connected to the control unit (upper chassis) through the HP 4195A's rear panel **J4** connectors.

A9

The third IF signal from the A20 board is input to two Phase Detectors which are driven by two phase reference signals. The two phase reference signals are at the same frequency as the third IF (6.666666667 MHz) and are 90° out of phase with each other. The phase detector dc output signals, containing ripple, represents the magnitude of the in-phase component of the IF signal to the phase reference signal.

The receiver resolution bandwidth is determined by selectively filtering the outputs of the phase detectors.

The filtered signals are fed into the sample and hold circuits and are converted to digital values using multi-slope A-D converters. The digital clock counters for the A-D converters are located on the A8 board.

MEASUREMENT CIRCUIT CONTROL AND DC SOURCE CIRCUIT

A8

The analog measurement circuit is controlled by the A8 board. The digital control signals necessary to control the fractional N PLL synthesizer are output from the Fractional N control output port. Digital control signals required for accurate timing and quick response are output through the parallel output port. Other control signals are multiplexed and output through the serial output port.

The A-D control circuit status data on the A9 board is sent to A8 board to control the clocking of the A-D counters.

The control data for the measurement unit (lower chassis) are connected through the rear panel 50-pin **J5** connector.

A50

The **J5** connector on the measurement unit is mounted on the A50 board. The serial data used to control the circuit boards mounted on the bottom side of the measurement unit (mainly the receiver circuits) are converted using a serial to parallel converter. The digital control signals are distributed to the circuit boards via the A21 board. The tuning signals for the VTF's on the A23 board are supplied by the outputs of D-A convertors. The signal source amplitude (OSC level) control signals are supplied by D-A convertors.

A51

The serial data for controlling circuit board mounted on the top side of the measurement unit (mainly signal source circuits) are converted by a serial to parallel convertor. The tuning signals for the VTF's on the A44 board are supplied by the outputs of D-A convertors. The dc source voltage (dc bias) control data are supplied by the output of D-A convertors which are then power amplified.

DATA PROCESSING AND DATA STORAGE CIRCUIT

A6, A7, A8, A12, A13, A16

There are two CPU boards in the HP 4195A -- A6 and A8. The A6 board mainly interfaces the HP 4195A to the operator and computes digital data. The A8 board mainly interfaces the analog measurement circuit. The A6 and A8 boards interface through the shared RAM on the A7 board. The A6 board also controls the CRT display through the A7 board on which the Graphics Display Controller and video RAM to control CRT display circuits are located. The A16 board interfaces the A6 board to the flexible disc drive. The A12 board interfaces the A6 board and the A13 front panel keyboard.

CRT DISPLAY CIRCUIT

The CRT display circuit is contained on the A4, A5, and A17 boards and on part of the A7 board.

A4

The A4 PC board generates the horizontal and vertical sawtooth deflection signals synchronized to timing signals from the A7 board. The deflection signals drive the CRT deflection yoke.

A5

The A5 PC board converts a two-bit digital signal from the A7 board into a four level video signal for each of the three (Red, Green, and Blue) color guns (CRT cathodes via the A17 socket board).

POWER SUPPLY CIRCUITS

The power supply circuits contained on the A1, A2, and A3 PC boards, provide dc power to all of the HP 4195A's circuits. The ac power line voltage is rectified on the A1 board and the rectified dc voltage is then converted back into an ac voltage whose duty cycle is controlled by the regulator on the A2 board to maintain a constant dc output voltage. The controlled ac voltage is fed to a transformer some of whose stepped down ac secondary voltages are rectified on the A3 board.

OPTION CIRCUITS

The Option 001 circuit (A60 board assembly) provides a high stability 10 MHz reference signal to the rear panel **REFERENCE OVEN** connector. The 10 MHz signal is connected to rear panel **EXT REFERENCE** connector and is then supplied to the VCXO on the A10 board.

NOTE

PC boards A1 through A17 are installed in the HP 4195A's Control Unit (upper chassis).

PC boards A20 through A30, A128 and A130 are installed in the bottom side of the HP 4195A's measurement unit (lower chassis).

PC boards A31 through A60 are installed in the top side of the HP 4195A's measurement unit (lower chassis).

HINTS

The following paragraphs describe useful troubleshooting hints. The points in the following paragraphs will give you to information needed for efficient fault board isolation.

- The cooling fan on the control unit (upper chassis) rear panel operates using ac line power. The cooling fan on the measurement unit (lower chassis) rear panel operates using dc power from the A3 power supply output board through rear the interconnection cables. So when an HP 4195A will not turn **ON**, check the cooling fans on the rear panels. If both fans do not rotate, check the ac power line circuit. If only the fan on the control unit rear panel rotates, check the dc power supply.

- The red LED indicators (A1DS1 and A1DS2) indicate that ac line voltage is present on the A1 board. (The power line circuit seems to be all right.)

- All of the system clock signals (except for the CRT display deflection signal) are generated on the A10 frequency generator board. The A10 board outputs can be observed as follows.

Frequency	Amplitude	Monitor at
80 MHz	-10 dBm ±0.5 dB	**J3 (80MHz OUT)** on the control unit rear panel
10 MHz	0 dBm ±3 dB	**10MHz OUTPUT** on the control unit rear panel

- The A6 board has a clock generator which is used for troubleshooting and production use. So when the system clock generated on the A10 board is missing, switch jumpers (A6W3 and A6W4) to the test position to operate the microprocessor circuit while troubleshooting the A10 board.

- The CRT deflection oscillator signals are generated on the A7 board.

- The following data are affected by correction data stored in the EEPROM (A8U17).

  * Spectrum configuration measurement data

  * Signal source output amplitude data

  * Tracking filters (on A23 and A44) tuning control data

HARDWARE RELATED ERROR MESSAGES

Table 1 lists the HP 4195A hardware related error messages and possible remedies.

Table 1. Hardware Error Messages

Message	Remedy
A: RAM R/W err, adrs=*dddddd*H err-bit=*dddd*H	Troubleshoot the A6 board.
A: ROM allocation error	Troubleshoot the A6 board.
A: ROM check sum error, ID=*dd*	Troubleshoot the A6 board.
A: ROM combination mismatch	Troubleshoot the A6 board.
Back up RAM data lost	Check the rechargeable battery (A6BT1) or the charge circuit.
B: RAM R/W err, adrs=*dddddd*H err-bit=*dddd*H	Troubleshoot the A8 board.
B: ROM allocation error	Troubleshoot the A8 board.
B: ROM check sum error, ID=*dd*	Troubleshoot the A8 board.
B: ROM combination mismatch	Troubleshoot the A8 board.
EEPROM check sum error	Troubleshoot the A8 board.
Fractional N loop + unlocked	Troubleshoot the A10 board.
Fractional N loop - unlocked	Troubleshoot the A10 board.

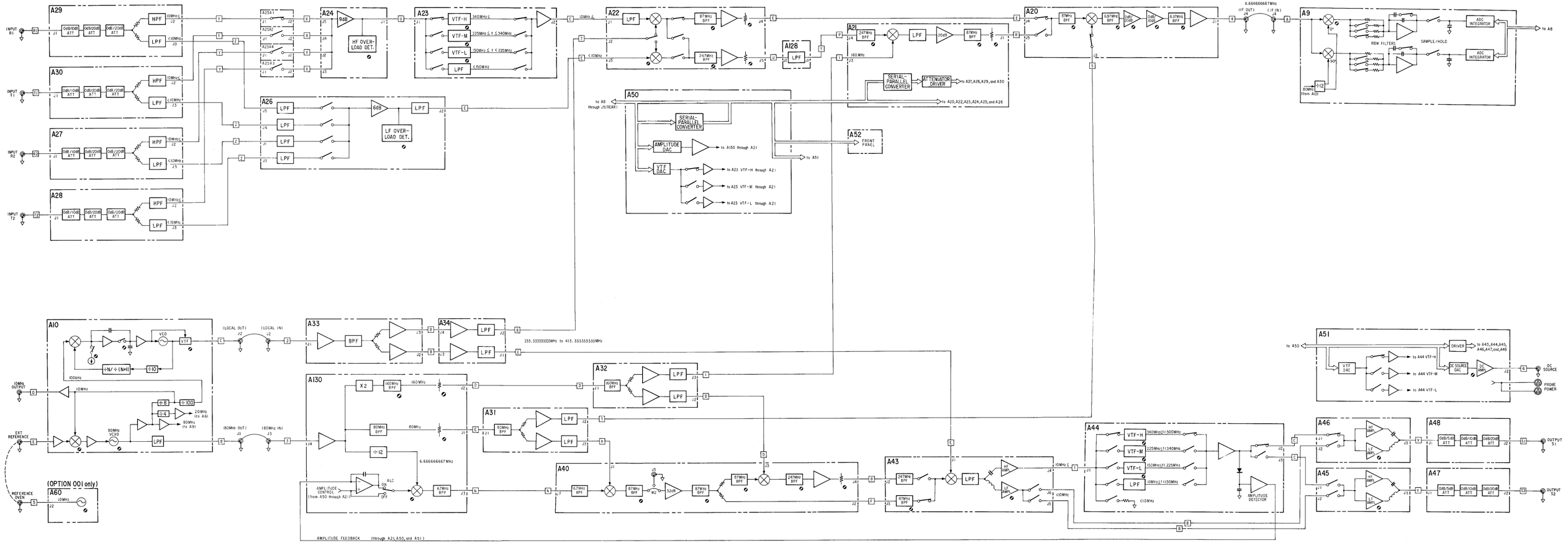

Figure 1. HP 4195A Analog Circuitry Overall Block Diagram

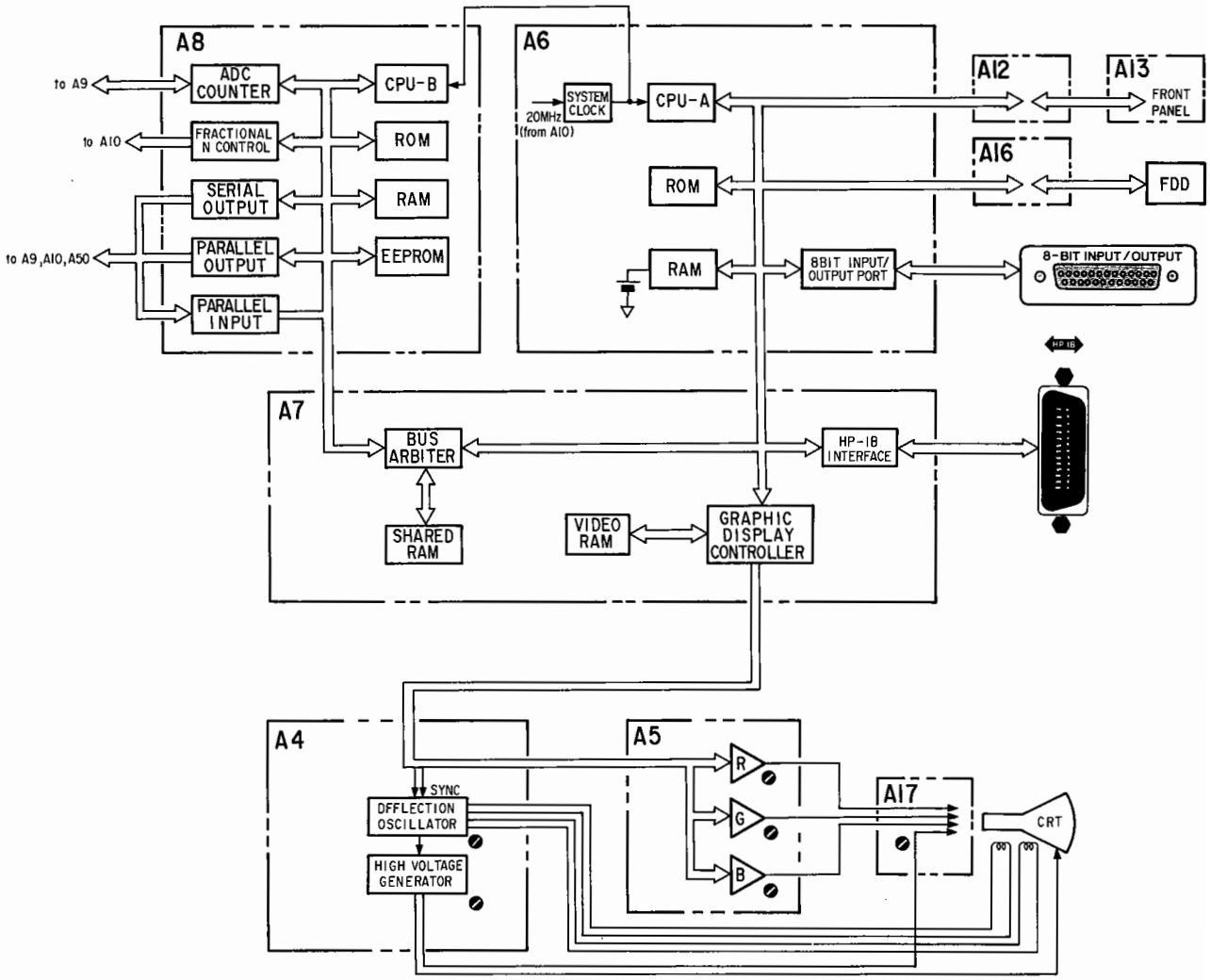

Figure 2. HP 4195A Digital and Display Circuit Block Diagrams

CONTROL UNIT SERVICE SHEETS

POWER SUPPLY SERVICE SHEET

The Power Supply section (A1, A2, A3) supplies +5 V, +7 V, ±16 V, and ±51 V to Control Unit motherboard A15.

CIRCUIT DESCRIPTION:

Figure 1 shows the block diagram of the power supply (boards A1, A2, and A3).

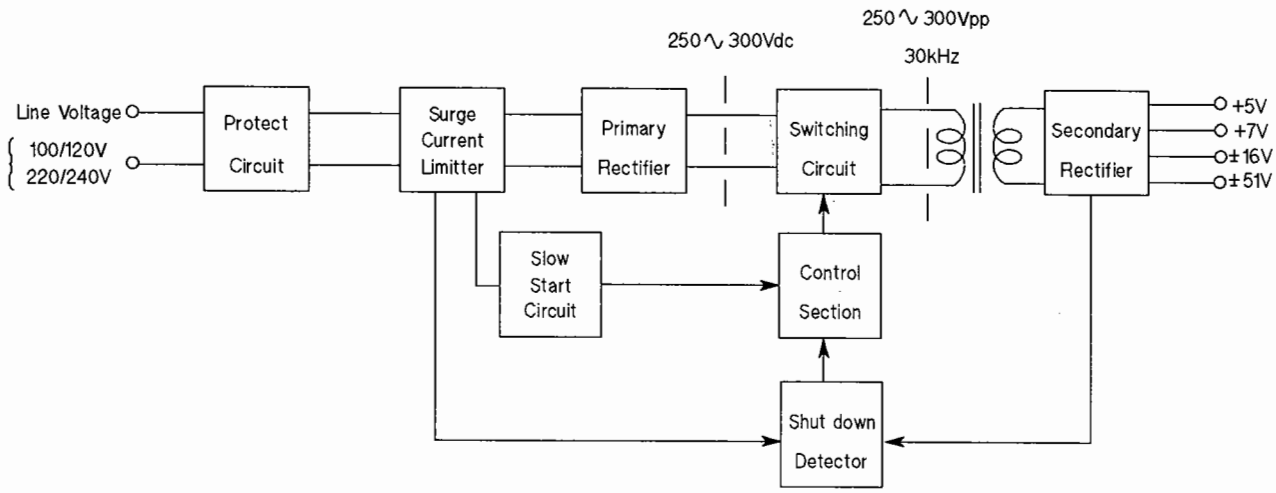

Figure 1. Power Supply Block Diagram

Protect Circuit: (A1E1, A1RV1, A1RV2)

Thermister (arester) A1E1 protects the primary rectifier and switching circuit from overvoltage damage if the 220/240V line voltage is applied to the instrument when the power selection switch is set to the 100/120V position. In which case, A1RV1, A1RV2 and the power line fuse will open up.

Surge Current Limiter: (A1R7)

The surge current limiter circuit limits the current when the instrument is turned **ON**. A1R7 limits the surge current through the primary rectifier at power up.

Primary Rectifier: (A1CR1, A1C6 to A1C11, A1DS1; A1DS2)

The Primary Rectifier rectifies the line voltage, and supplies about 300 V dc to the switching circuit. This circuit acts as a full wave rectifier when the line voltage selector is set to 220/240 V, and as a half wave voltage doubler when the line voltage selector is set to 100/120 V. A1DS1 and A1DS2 are **ON** while the power supply filter capacitors are still charged, even when the power switch is **OFF**.

Supply Voltage Control Section: (A2U1, A2U2, A2CR12, A2Q1, A2Q3 to A2Q6)

When the HP 4195A is turned **ON**, Voltage Regulator A2U2 supplies +12 V dc to A2U1. A2U1 drives the switching circuit, and controls the duty cycle by comparing the 5 V REF voltage to the voltage supplied to A2U1 pin 3 through A3L2. A2U1 shuts down the switching circuit when it receives the **SHUT DOWN** signal from the Shut Down Detector.

Switching Circuit: (A2Q11, A2Q12, A2C20, A2C21, A2T1)

The switching circuit converts the dc voltage from the primary rectifier (about 300 V) to a 30 kHz ac voltage (about 300 Vpp) and feeds it to A3T3.

Slow Start Circuit: (A2Q1, A2Q2, A2Q7 to A2Q10, A1K1)

The Slow Start Circuit prevents the duty cycle from increasing radically at power **ON**. If the voltage from the A1 board reaches 210 V, A2Q8 turns **ON** causing darlington pair A2Q9 and A2Q10 to turn **ON** and activate A1K1. A1K1 is activated by the slow start circuit after about a one second delay from the time the power switch is turned **ON**. If A1K1 does not activate, the heat produced by A1R7 causes thermal fuse FT1 to open up.

Secondary Rectifier: (A3T3, A3CR8 to A3CR15)

The Secondary Rectifier rectifies the voltage stepped down by A3T3, and supplies +5 V, +7 V, ±16 V, and ±51 V to the Control Unit motherboard. A3T1 and A3T2 maintains a constant load current.

Shut Down Detector: (A2R28, A2CR2, A2CR3, A2CR5, A3Q1 to A3Q3, A3U1, A3CR1, A3CR4 to A3CR6, A3CR20, A3CR21, A3ST1)

When any of the following conditions are detected, A2U1 **SHUTS DOWN** the switching circuit. For each shut down condition listed, the component which detects the shut down condition is given in parenthesis.

1. Over current condition on the primary rectifier (A2R28)
2. Over voltage condition on the A2U2 input (A2CR2)
3. Over voltage condition on the A3T3 input (A2CR5)
4. Over voltage condition on the +5 V output line (A3CR5)
5. Over voltage condition on the +7 V output line (A3CR6)
6. Over voltage condition on the +51 V output line (A3CR2, A3CR4)
7. Overheat condition due to any of the following causes: heat generated by a power supply, fan stopped, or by heat generated from other failures within the instrument (A3ST1)

If a shut down is caused by conditions 4 through 7, A3U1 (opto-coupler), and A3Q3 will turn **ON** sending the shutdown signal to A2U1.

TROUBLESHOOTING GUIDE:

1. A2W1 connection:

When A2W1 is set to the test position, A2U1's output signal duty cycle is about 50%, and it can be monitored at A2TP3 and A2TP4 , pins 14 and 15, to check circuit operation.

WARNING

REMOVE A1 BOARD WHEN A2W1 IS CONNECTED TO THE TEST POSITION OR UNREGULATED VOLTAGE WILL BE SUPPLIED TO THE OTHER BOARDS AND THEY WILL BE DAMAGED.

2. TP3, TP4 - TP1 (GND) waveform:

When the A1 board is removed, and A2W1 is connected to the test position, the following waveform should be displayed.

Setting:

CHAN 1,2:	5 V/div
Time:	10 µsec/div
Probe Tip (CH 1):	A2TP3
Probe Tip (CH 2):	A2TP4
GND lead:	A2TP1

Waveform:

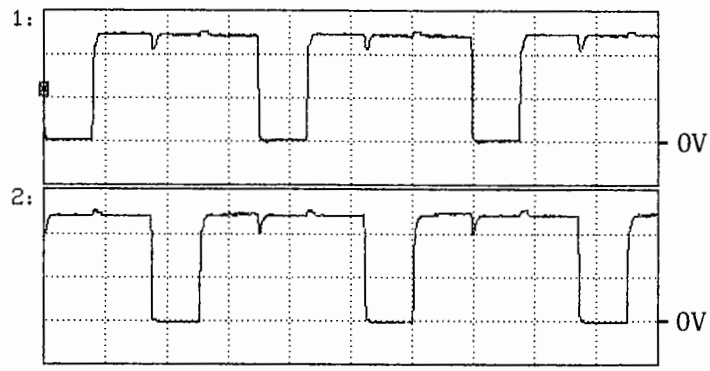

3. TP6 - TP8 waveform:

When the A1 board is removed, and A2W1 is connected to the test position, the following waveform should be displayed.

Setting:

CHAN 1:	5 V/div
Time:	10 µsec/div
Probe Tip:	A2TP6
GND lead:	A2TP8

Waveform:

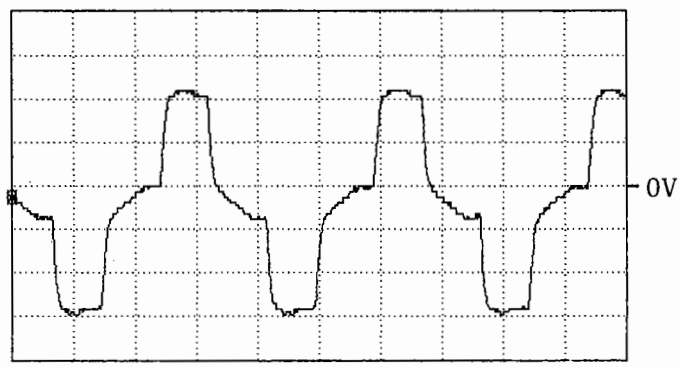

Table 1. A1 Replaceable Parts

Reference Designator	HP Part Number	C D	Qty.	Description	Mfr Code	Mfr Part Number
A1				PRIMARY RECTIFIER		
A1	04194-66501	1	1	RECTIFIER BD ASSY	28480	04194-66501
A1C1	0160-6487	9	2	CAPACITOR-FXD 1000PF +-20% 400VAC(RMS)	06383	CK45-F2GA102MYAS
A1C2	0160-6487	9		CAPACITOR-FXD 1000PF +-20% 400VAC(RMS)	06383	CK45-F2GA102MYAS
A1C3	0160-6488	0	2	CAPACITOR-FXD 4700PF +-20% 400VAC(RMS)	06383	CK45-E2GA472MYAS
A1C4	0160-6488	0		CAPACITOR-FXD 4700PF +-20% 400VAC(RMS)	06383	CK45-E2GA472MYAS
A1C5	0160-4413	7	1	CAPACITOR-FXD .6UF +-10% 250VAC(RMS)	C0633	PME271M660
A1C6	0180-3253	3	6	CAPACITOR-FXD 470UF+-20% 250VDC AL	28480	0180-3253
A1C7	0180-3253	3		CAPACITOR-FXD 470UF+-20% 250VDC AL	28480	0180-3253
A1C8	0180-3253	3		CAPACITOR-FXD 470UF+-20% 250VDC AL	28480	0180-3253
A1C9	0180-3253	3		CAPACITOR-FXD 470UF+-20% 250VDC AL	28480	0180-3253
A1C10	0180-3253	3		CAPACITOR-FXD 470UF+-20% 250VDC AL	28480	0180-3253
A1C11	0180-3253	3		CAPACITOR-FXD 470UF+-20% 250VDC AL	28480	0180-3253
A1C12	0160-3969	6	1	CAPACITOR-FXD .015UF +-20PF 250VAC(RMS)	28480	0160-3969
A1CR1	1906-0313	1	1	BRIDGE 600V	28480	1906-0313
A1CR2	1901-0050	3	1	DIODE-SWITCHING 80V 200MA 2NS DO-35	9N171	1N4150
A1DS1	1990-0486	6	2	LED-LAMP LUM-INT=2MCD IF=25MA-MAX BVR=5V	28480	HLMP-1301
A1DS2	1990-0486	6		LED-LAMP LUM-INT=2MCD IF=25MA-MAX BVR=5V	28480	HLMP-1301
A1E1	0837-0337	1	1	THERMISTOR-SURGE PTCTR BKDN V: DC 230V	28480	0837-0337
A1F1	2110-0014	3	1	FUSE 4A 250V TD 1.25X.25 UL	75915	313004
A1FT1	2110-0663	8	1	FUSE-THERMAL 96 DEG C	28480	2110-0663
A1K1	0490-1499	2	1	RELAY 12V	28480	0490-1499
A1L1	9100-1669	2	1	INDUCTOR RF-CH-MLD 4.7MH 5%	28480	9100-1669
A1L2	9140-0131	5	1	INDUCTOR RF-CH-MLD 10MH 5%	28480	9140-0131
A1L3	9140-0129	1	1	INDUCTOR RF-CH-MLD 220UH 5%	28480	9140-0129
A1L4	9100-3139	5	3	INDUCTOR 75UH 15% .5D-INX.875LG-IN	28480	9100-3139
A1L5	9100-3139	5		INDUCTOR 75UH 15% .5D-INX.875LG-IN	28480	9100-3139
A1L6	9100-3139	5		INDUCTOR 75UH 15% .5D-INX.875LG-IN	28480	9100-3139
A1MP1	04194-01204		1	ANGLE, CIRCUIT SIDE		
A1R1	0698-0085	0	2	RESISTOR 2.61K 1% .125W F TC=0+-100	24546	CT4-1/8-T0-2611-F
A1R2	0764-0031	7	4	RESISTOR 47K 5% 2W MO TC=0+-200	28480	0764-0031
A1R3	0764-0031	7		RESISTOR 47K 5% 2W MO TC=0+-200	28480	0764-0031
A1R4	0764-0031	7		RESISTOR 47K 5% 2W MO TC=0+-200	28480	0764-0031
A1R5	0764-0031	7		RESISTOR 47K 5% 2W MO TC=0+-200	28480	0764-0031
A1R6	0698-0085	0		RESISTOR 2.61K 1% .125W F TC=0+-100	24546	CT4-1/8-T0-2611-F
A1R7	0811-3621	8	1	RESISTOR 8 5% 6W PW TC=0+-50	28480	0811-3621
A1R8	0698-4037	0	1	RESISTOR 46.4 1% .125W F TC=0+-100	28480	0698-4037
A1RV1	1901-1217	6	2	DIODE-VRTS 150V	28480	1901-1217
A1RV2	1901-1217	6		DIODE-VRTS 150V	28480	1901-1217
A1X1	1252-0808	2	1	CONN-POST TYPE 2.54-PIN-SPCG 48-CONT	28480	1252-0808
	4040-0748	3	1	EXTR-PC BD BLK POLYC .062-IN-BD-THKNS	28480	4040-0748
	4040-0749	4	1	EXTR-PC BD BRN POLYC .062-IN-BD-THKNS	28480	4040-0749

*** Indicates factory selected value.**

Table 2. A2 Replaceable Parts (1 of 2)

Reference Designator	HP Part Number	C D	Qty.	Description	Mfr Code	Mfr Part Number
A2				POWER SUPPLY CONTROL		
A2	04194-66502	2	1	PS CNTRL BD ASY	28480	04194-66502
A2C1	0180-3469	3	4	CAPACITOR-FXD 100UF+-20% 25VDC AL	28480	0180-3469
A2C2	0160-4832	4	2	CAPACITOR-FXD .01UF +-10% 100VDC CER	28480	0160-4832
A2C3	0160-4824	4	1	CAPACITOR-FXD 680PF +-5% 100VDC CER	28480	0160-4824
A2C4	0160-4835	7	4	CAPACITOR-FXD .1UF +-10% 50VDC CER	28480	0160-4835
A2C5				NOT ASSIGNED		
A2C6	0160-4832	4		CAPACITOR-FXD .01UF +-10% 100VDC CER	28480	0160-4832
A2C7	0180-3469	3		CAPACITOR-FXD 100UF+-20% 25VDC AL	28480	0180-3469
A2C8	0160-4835	7		CAPACITOR-FXD .1UF +-10% 50VDC CER	28480	0160-4835
A2C9	0160-4801	7	1	CAPACITOR-FXD 100PF +-5% 100VDC CER	28480	0160-4801
A2C10	0160-5502	7	1	CAPACITOR- 1 UF 63 VDC F	28480	0160-5502
A2C11	0180-3469	3		CAPACITOR-FXD 100UF+-20% 25VDC AL	28480	0180-3469
A2C12	0180-3469	3		CAPACITOR-FXD 100UF+-20% 25VDC AL	28480	0180-3469
A2C13	0160-4835	7		CAPACITOR-FXD .1UF +-10% 50VDC CER	28480	0160-4835
A2C14	0160-4835	7		CAPACITOR-FXD .1UF +-10% 50VDC CER	28480	0160-4835
A2C15	0180-2980	1	2	CAPACITOR-FXD 1000UF+-20% 35VDC AL	28480	0180-2980
A2C16	0180-2980	1		CAPACITOR-FXD 1000UF+-20% 35VDC AL	28480	0180-2980
A2C17	0160-3969	6	2	CAPACITOR-FXD .015UF +-20PF 250VAC(RMS)	28480	0160-3969
A2C18	0160-3969	6		CAPACITOR-FXD .015UF +-20PF 250VAC(RMS)	28480	0160-3969
A2C19	0160-6403	9	1	CAPACITOR-FXD 390PF +-10% 2KVDC CER	10380	DE0807R391K2K
A2C20	0160-6363	0	2	CAPACITOR 1U 250V FILM	28480	0160-6363
A2C21	0160-6363	0		CAPACITOR 1U 250V FILM	28480	0160-6363
A2C22	0160-4822	2	2	CAPACITOR-FXD 1000PF +-5% 100VDC CER	28480	0160-4822
A2C23	0160-4822	2		CAPACITOR-FXD 1000PF +-5% 100VDC CER	28480	0160-4822
A2C24-A2C100				NOT ASSIGNED		
A2C101	0160-4831	3	1	CAPACITOR-FXD 4700PF +-10% 100VDC CER	28480	0160-4831
A2CR1	1901-0050	3	5	DIODE-SWITCHING 80V 200MA 2NS DO-35	9N171	1N4150
A2CR2	1902-0970	8	1	DIODE-ZNR 33V 5% DO-35 PD=.4W TC=+.097%	28480	1902-0970
A2CR3	1902-0945	7	3	DIODE-ZNR 3V 5% DO-35 PD=.4W TC=-.043%	28480	1902-0945
A2CR4	1901-0050	3		DIODE-SWITCHING 80V 200MA 2NS DO-35	9N171	1N4150
A2CR5	1902-3140	0	1	DIODE-ZNR 8.25V 2% DO-35 PD=.4W	28480	1902-3140
A2CR6	1901-0050	3		DIODE-SWITCHING 80V 200MA 2NS DO-35	9N171	1N4150
A2CR7	1902-3150	2	1	DIODE-ZNR 9.09V 2% DO-35 PD=.4W	28480	1902-3150
A2CR8	1901-0050	3		DIODE-SWITCHING 80V 200MA 2NS DO-35	9N171	1N4150
A2CR9	1902-0945	7		DIODE-ZNR 3V 5% DO-35 PD=.4W TC=-.043%	28480	1902-0945
A2CR10	1901-0050	3		DIODE-SWITCHING 80V 200MA 2NS DO-35	9N171	1N4150
A2CR11	1902-0945	7		DIODE-ZNR 3V 5% DO-35 PD=.4W TC=-.043%	28480	1902-0945
A2CR12	1906-0006	9	1	DIODE-FW BRDG 400V 1A	1B546	VE48
A2MP1	1205-0513		1	HEAT SINK FOR U2		
A2MP2	1205-0310		2	HEAT SINK FOR Q11		
A2MP3	1205-0310			HEAT SINK FOR Q11		
A2Q1	1853-0459	3	1	TRANSISTOR PNP SI PD=625MW FT=200MHZ	28480	1853-0459
A2Q2	1854-0810	2	4	TRANSISTOR NPN SI PD=625MW FT=200MHZ	28480	1854-0810
A2Q3	1854-0477	7	2	TRANSISTOR NPN 2N2222A SI TO-18 PD=500MW	04713	2N2222A
A2Q4	1853-0281	9	2	TRANSISTOR PNP 2N2907A SI TO-18 PD=400MW	04713	2N2907A
A2Q5	1854-0477	7		TRANSISTOR NPN 2N2222A SI TO-18 PD=500MW	04713	2N2222A
A2Q6	1853-0281	9		TRANSISTOR PNP 2N2907A SI TO-18 PD=400MW	04713	2N2907A
A2Q7	1854-0810	2		TRANSISTOR NPN SI PD=625MW FT=200MHZ	28480	1854-0810
A2Q8	1854-0810	2		TRANSISTOR NPN SI PD=625MW FT=200MHZ	28480	1854-0810

*** Indicates factory selected value.**

Table 2. A2 Replaceable Parts (2 of 2)

Reference Designator	HP Part Number	C D	Qty.	Description	Mfr Code	Mfr Part Number
A2Q9	1854-0810	2		TRANSISTOR NPN SI PD=625MW FT=200MHZ	28480	1854-0810
A2Q10	1854-0389	0	1	TRANSISTOR NPN 2N4922 SI PD=30W FT=3MHZ	04713	2N4922
A2Q11	1855-0616	8	2	TRANSISTOR MOSFET N-CHAN TO-3 SI	28480	1855-0616
A2Q12	1855-0616	8		TRANSISTOR MOSFET N-CHAN TO-3 SI	28480	1855-0616
A2R1	0757-0397	3	3	RESISTOR 68.1 1% .125W F TC=0+-100	24546	CT4-1/8-T0-68R1-F
A2R2	0757-0280	3	4	RESISTOR 1K 1% .125W F TC=0+-100	24546	CT4-1/8-T0-1001-F
A2R3	0757-0280	3		RESISTOR 1K 1% .125W F TC=0+-100	24546	CT4-1/8-T0-1001-F
A2R4	0757-0419	0	1	RESISTOR 681 1% .125W F TC=0+-100	24546	CT4-1/8-T0-681R-F
A2R5	0757-0199	3	2	RESISTOR 21.5K 1% .125W F TC=0+-100	24546	CT4-1/8-T0-2152-F
A2R6	0757-0200	7	1	RESISTOR 5.62K 1% .125W F TC=0+-100	24546	CT4-1/8-T0-5621-F
A2R7	2100-3352	7	1	RESISTOR-TRMR 1K 10% C SIDE-ADJ 1-TRN	28480	2100-3352
A2R8	2100-3274	2	1	RESISTOR-TRMR 10K 10% C SIDE-ADJ 1-TRN	28480	2100-3274
A2R9	0757-0280	3		RESISTOR 1K 1% .125W F TC=0+-100	24546	CT4-1/8-T0-1001-F
A2R10	0698-0084	9	1	RESISTOR 2.15K 1% .125W F TC=0+-100	24546	CT4-1/8-T0-2151-F
A2R11				NOT ASSIGNED		
A2R12	0698-3151	7	1	RESISTOR 2.87K 1% .125W F TC=0+-100	24546	CT4-1/8-T0-2871-F
A2R13	0699-1704	4	2	RESISTOR 5.6 .5% .25W F TC=0+-350	28480	0699-1704
A2R14	0757-0459	8	1	RESISTOR 56.2K 1% .125W F TC=0+-100	24546	CT4-1/8-T0-5622-F
A2R15	0757-0280	3		RESISTOR 1K 1% .125W F TC=0+-100	24546	CT4-1/8-T0-1001-F
A2R16	0757-0199	3		RESISTOR 21.5K 1% .125W F TC=0+-100	24546	CT4-1/8-T0-2152-F
A2R17	0757-0442	9	1	RESISTOR 10K 1% .125W F TC=0+-100	24546	CT4-1/8-T0-1002-F
A2R18	0757-0401	0	3	RESISTOR 100 1% .125W F TC=0+-100	24546	CT4-1/8-T0-101-F
A2R19	0698-3161	9	1	RESISTOR 38.3K 1% .125W F TC=0+-100	24546	CT4-1/8-T0-3832-F
A2R20	0698-3455	4	2	RESISTOR 261K 1% .125W F TC=0+-100	24546	CT4-1/8-T0-2613-F
A2R21	0698-3455	4		RESISTOR 261K 1% .125W F TC=0+-100	24546	CT4-1/8-T0-2613-F
A2R22	0757-0397	3		RESISTOR 68.1 1% .125W F TC=0+-100	24546	CT4-1/8-T0-68R1-F
A2R23	0757-0401	0		RESISTOR 100 1% .125W F TC=0+-100	24546	CT4-1/8-T0-101-F
A2R24	0757-0397	3		RESISTOR 68.1 1% .125W F TC=0+-100	24546	CT4-1/8-T0-68R1-F
A2R25	0698-3629	4	2	RESISTOR 270 5% 2W MO TC=0+-200	28480	0698-3629
A2R26	0698-3629	4		RESISTOR 270 5% 2W MO TC=0+-200	28480	0698-3629
A2R27				NOT ASSIGNED		
A2R28	0811-1553	1	1	RESISTOR .68 5% 2W PW TC=0+-800	75042	BWH2-11/16-J
A2R29	0699-1704	4		RESISTOR 5.6 .5% .25W F TC=0+-350	28480	0699-1704
A2R30	0698-3260	9	2	RESISTOR 464K 1% .125W F TC=0+-100	28480	0698-3260
A2R31	0698-3260	9		RESISTOR 464K 1% .125W F TC=0+-100	28480	0698-3260
A2R32-A2R100				NOT ASSIGNED		
A2R101	0757-0401	0		RESISTOR 100 1% .125W F TC=0+-100	24546	CT4-1/8-T0-101-F
A2T1	9100-4499	2	1	TRANSFORMER L(PINS 10 & 11): 5.3 MH+-30%	28480	9100-4499
A2U1	1813-0255	3	1	IC SW-M CKT 22 PKG	28480	1813-0255
A2U2	1826-0099	0	1	IC V RGLTR TO-220	07263	7812UC
A2W1	1251-4822	6	1	CONN-POST TYPE .100-PIN-SPCG 3-CONT	28480	1251-4822
A2X1	1252-0808	2	1	CONN-POST TYPE 2.54-PIN-SPCG 48-CONT	28480	1252-0808
	4040-0748	3	1	EXTR-PC BD BLK POLYC .062-IN-BD-THKNS	28480	4040-0748
	4040-0750	7	1	EXTR-PC BD RED POLYC .062-IN-BD-THKNS	28480	4040-0750
	04194-00635	1		CASE SHIELD, COMPONENT SIDE		
	04194-00636	1		CASE SHIELD, CIRCUIT SIDE		

*** Indicates factory selected value.**

Table 3. A3 Replaceable Parts (1 of 2)

Reference Designator	HP Part Number	C D	Qty.	Description	Mfr Code	Mfr Part Number
A3				POWER SUPPLY OUTPUT		
A3	04194-66503	3	1	PS OUTPUT BD ASY	28480	04194-66503
A3C1	0160-4835	7	2	CAPACITOR-FXD .1UF +-10% 50VDC CER	28480	0160-4835
A3C2	0160-4835	7		CAPACITOR-FXD .1UF +-10% 50VDC CER	28480	0160-4835
A3C3	0180-3665	1	2	CAPACITOR-FXD 330UF+-20% 63VDC AL	28480	0180-3665
A3C4	0180-3665	1		CAPACITOR-FXD 330UF+-20% 63VDC AL	28480	0180-3665
A3C5	0160-4808	4	1	CAPACITOR-FXD 470PF +-5% 100VDC CER	28480	0160-4808
A3C6	0160-6403	9	1	CAPACITOR-FXD 390PF +-10% 2KVDC CER	10380	DE0807R391K2K
A3C7	0180-3587	6	2	CAPACITOR-FXD 1000UF+-20% 50VDC AL	28480	0180-3587
A3C8	0180-3587	6		CAPACITOR-FXD 1000UF+-20% 50VDC AL	28480	0180-3587
A3C9	0180-1075	3	1	CAPACITOR-FXD 2200 UF 16VDC AL	28480	0180-1075
A3C10	0180-3664	0	2	CAPACITOR-FXD 3300UF+-20% 10VDC AL	28480	0180-3664
A3C11	0180-3664	0		CAPACITOR-FXD 3300UF+-20% 10VDC AL	28480	0180-3664
A3C12	0160-4832	4	1	CAPACITOR-FXD .01UF +-10% 100VDC CER	28480	0160-4832
A3CR1	1901-1065	2	7	DIODE-PWR RECT 1N4936 400V 1A 200NS	14936	1N4936
A3CR2	1902-0968	4	1	DIODE-ZNR 27V 5% DO-35 PD=.4W TC=+.095%	28480	1902-0968
A3CR3	1901-1065	2		DIODE-PWR RECT 1N4936 400V 1A 200NS	14936	1N4936
A3CR4	1902-0969	5	1	DIODE-ZNR 30V 5% DO-35 PD=.4W TC=+.095%	28480	1902-0969
A3CR5	1902-3094	3	1	DIODE-ZNR 5.11V 2% DO-35 PD=.4W	28480	1902-3094
A3CR6	1902-0956	0	1	DIODE-ZNR 8.2V 5% DO-35 PD=.4W TC=+.065%	28480	1902-0956
A3CR7	1901-0050	3	3	DIODE-SWITCHING 80V 200MA 2NS DO-35	9N171	1N4150
A3CR8	1901-1175	5	2	DIODE 400V 1.8A	28480	1901-1175
A3CR9	1901-1175	5		DIODE 400V 1.8A	28480	1901-1175
A3CR10	1901-1065	2		DIODE-PWR RECT 1N4936 400V 1A 200NS	14936	1N4936
A3CR11	1901-1065	2		DIODE-PWR RECT 1N4936 400V 1A 200NS	14936	1N4936
A3CR12	1906-0316	4	2	DIODE-CT-RECT 200V 5A	28480	1906-0316
A3CR13	1906-0317	5	1	DIODE-CT-RECT 200V 5A	28480	1906-0317
A3CR14	1906-0316	4		DIODE-CT-RECT 200V 5A	28480	1906-0316
A3CR15	1906-0314	2	1	DIODE-CT-S-BARR 40V 15A	28480	1906-0314
A3CR16	1901-1065	2		DIODE-PWR RECT 1N4936 400V 1A 200NS	14936	1N4936
A3CR17	1901-1065	2		DIODE-PWR RECT 1N4936 400V 1A 200NS	14936	1N4936
A3CR18	1901-1065	2		DIODE-PWR RECT 1N4936 400V 1A 200NS	14936	1N4936
A3CR19	1902-1217	8	1	DIODE-ZNR 6.2V 5% DO-4 PD=10W TC=+.035%	28480	1902-1217
A3CR20	1901-0050	3		DIODE-SWITCHING 80V 200MA 2NS DO-35	9N171	1N4150
A3CR21	1901-0050	3		DIODE-SWITCHING 80V 200MA 2NS DO-35	9N171	1N4150
A3CR22	1902-3385	5	1	DIODE-ZNR 69.8V 2% DO-7 PD=.4W TC=+.079%	28480	1902-3385
A3F1	2110-0665	0	2	FUSE 1A 125V NTD .28X.096	28480	2110-0665
A3F2	2110-0665	0		FUSE 1A 125V NTD .28X.096	28480	2110-0665
A3F3	2110-0685	4	2	FUSE-SUBMINIATURE 7A 125V NTD .3X.103 UL	28480	2110-0685
A3F4	2110-0685	4		FUSE-SUBMINIATURE 7A 125V NTD .3X.103 UL	28480	2110-0685
A3F5	2110-0712	8	3	FUSE-SUBMINIATURE 4A 125V NTD .28X.0955	28480	2110-0712
A3F6	2110-0712	8		FUSE-SUBMINIATURE 4A 125V NTD .28X.0955	28480	2110-0712
A3F7	2110-0712	8		FUSE-SUBMINIATURE 4A 125V NTD .28X.0955	28480	2110-0712
A3L1	9140-1135	1	1	INDUCTOR 76UH 15% 1.213W-INX1.161LG-IN	28480	9140-1135
A3L2	9140-1136	2	1	INDUCTOR 27MH 35% .61W-INX.728LG-IN	28480	9140-1136
A3M1	1120-1907	5	1	TIMER	28480	1120-1907

*** Indicates factory selected value.**

Table 3. A3 Replaceable Parts (2 of 2)

Reference Designator	HP Part Number	C D	Qty.	Description	Mfr Code	Mfr Part Number
A3MP1	04194-01204		3	HEAT SINK FOR CR14		
A3MP2	04194-01204			HEAT SINK FOR CR13		
A3MP3	04194-01204			HEAT SINK FOR CR12		
A3MP4	04194-01207		1	HEAT SINK FOR CR15		
A3MP5	04194-01208		1	HEAT SINK FOR CR15		
A3MP6	04194-01204		2	ANGLE, CIRCUIT SIDE		
A3MP7	04194-01204			ANGLE, CIRCUIT SIDE		
A3Q1	1853-0459	3	1	TRANSISTOR PNP SI PD=625MW FT=200MHZ	28480	1853-0459
A3Q2	1854-0810	2	2	TRANSISTOR NPN SI PD=625MW FT=200MHZ	28480	1854-0810
A3Q3	1854-0810	2		TRANSISTOR NPN SI PD=625MW FT=200MHZ	28480	1854-0810
A3R1	0764-0003	3	1	RESISTOR 3.3K 5% 2W MO TC=0+-200	28480	0764-0003
A3R2	0699-1704	4	2	RESISTOR 5.6 .5% .25W F TC=0+-350	28480	0699-1704
A3R3	0683-2705	4	1	RESISTOR 27 5% .25W CF TC=0-400	01121	CB2705
A3R4	0698-4037	0	1	RESISTOR 46.4 1% .125W F TC=0+-100	28480	0698-4037
A3R5	0698-0082	7	3	RESISTOR 464 1% .125W F TC=0+-100	24546	CT4-1/8-T0-4640-F
A3R6	0698-0082	7		RESISTOR 464 1% .125W F TC=0+-100	24546	CT4-1/8-T0-4640-F
A3R7	0698-3438	3	1	RESISTOR 147 1% .125W F TC=0+-100	24546	CT4-1/8-T0-147R-F
A3R8	0683-5655	9	1	RESISTOR 5.6M 5% .25W CC TC=-900/+1100	01121	CB5655
A3R9	0698-8961	7	1	RESISTOR 909K 1% .125W F TC=0+-100	28480	0698-8961
A3R10	0698-3159	5	1	RESISTOR 26.1K 1% .125W F TC=0+-100	24546	CT4-1/8-T0-2612-F
A3R11	0757-0280	3	3	RESISTOR 1K 1% .125W F TC=0+-100	24546	CT4-1/8-T0-1001-F
A3R12	0757-0280	3		RESISTOR 1K 1% .125W F TC=0+-100	24546	CT4-1/8-T0-1001-F
A3R13	0698-3441	8	1	RESISTOR 215 1% .125W F TC=0+-100	24546	CT4-1/8-T0-215R-F
A3R14	0698-3430	5	1	RESISTOR 21.5 1% .125W F TC=0+-100	03888	PME55-1/8-T0-21R5-F
A3R15	0811-3735	5	2	RESISTOR 470 5% 3W PW TC=0+-40	09823	RGE-5B-470J
A3R16	0811-3735	5		RESISTOR 470 5% 3W PW TC=0+-40	09823	RGE-5B-470J
A3R17	0757-0279	0	2	RESISTOR 3.16K 1% .125W F TC=0+-100	24546	CT4-1/8-T0-3161-F
A3R18	0757-0279	0		RESISTOR 3.16K 1% .125W F TC=0+-100	24546	CT4-1/8-T0-3161-F
A3R19	0757-0280	3		RESISTOR 1K 1% .125W F TC=0+-100	24546	CT4-1/8-T0-1001-F
A3R20	0699-1704	4		RESISTOR 5.6 .5% .25W F TC=0+-350	28480	0699-1704
A3R21	0698-0082	7		RESISTOR 464 1% .125W F TC=0+-100	24546	CT4-1/8-T0-4640-F
A3R22	0757-0442	9	1	RESISTOR 10K 1% .125W F TC=0+-100	24546	CT4-1/8-T0-1002-F
A3R23	0757-0419	0	2	RESISTOR 681 1% .125W F TC=0+-100	24546	CT4-1/8-T0-681R-F
A3R24	0757-0419	0		RESISTOR 681 1% .125W F TC=0+-100	24546	CT4-1/8-T0-681R-F
A3ST1	3103-0125	3	1	THERMAL SW	28480	3103-0125
A3T1	9100-4566	4	1	TRANSFORMER L(PINS 3-4): 6 MH+-15% @	28480	9100-4566
A3T2	9100-4538	0	1	TRANSFORMER L(3-5): 154 UH +-15% @ 1 KHZ	28480	9100-4538
A3T3	9100-4562	0	1	TRANSFORMER INDUCTANCE (21-22): 3.6 MH	28480	9100-4562
A3U1	1990-0663	1	1	OPTO-ISOLATOR LED-PXSTR IF=40MA-MAX	28480	1990-0663
A3X1	1252-0810	6	1	CONN-POST TYPE 2.54-PIN-SPCG 60-CONT	28480	1252-0810
	0340-1006	0	3	INSULATOR FOR A TO-220 PACKAGE; THERMAL	28480	0340-1006
	4040-0748	3	1	EXTR-PC BD BLK POLYC .062-IN-BD-THKNS	28480	4040-0748
	4040-0751	8	1	EXTR-PC BD ORN POLYC .062-IN-BD-THKNS	28480	4040-0751

*** Indicates factory selected value.**

Table 4. A14 Replaceable Parts

Reference Designator	HP Part Number	C D	Qty.	Description	Mfr Code	Mfr Part Number
A14				MOTHERBOARD POWER SUPPLY		
A14	04194-66514	6	1	PWR MOTHERBD ASY	28480	04194-66514
A14J1	1251-3837	1	1	CONN-UTIL MT-LK 4-CKT 4-CONT	28480	1251-3837
A14J2	1251-7981	4	1	CONN-POST TYPE .156-PIN-SPCG 2-CONT	28480	1251-7981
A14J3	1251-5339	2	1	CONN-UTIL MT-LK 9-CKT 9-CONT	28480	1251-5339
A14XA1	1252-0809	3	2	CONN-POST TYPE 2.54-PIN-SPCG 48-CONT	28480	1252-0809
A14XA2	1252-0809	3		CONN-POST TYPE 2.54-PIN-SPCG 48-CONT	28480	1252-0809
A14XA3	1252-0811	7	1	CONN-POST TYPE 2.54-PIN-SPCG 60-CONT	28480	1252-0811

*** Indicates factory selected value.**

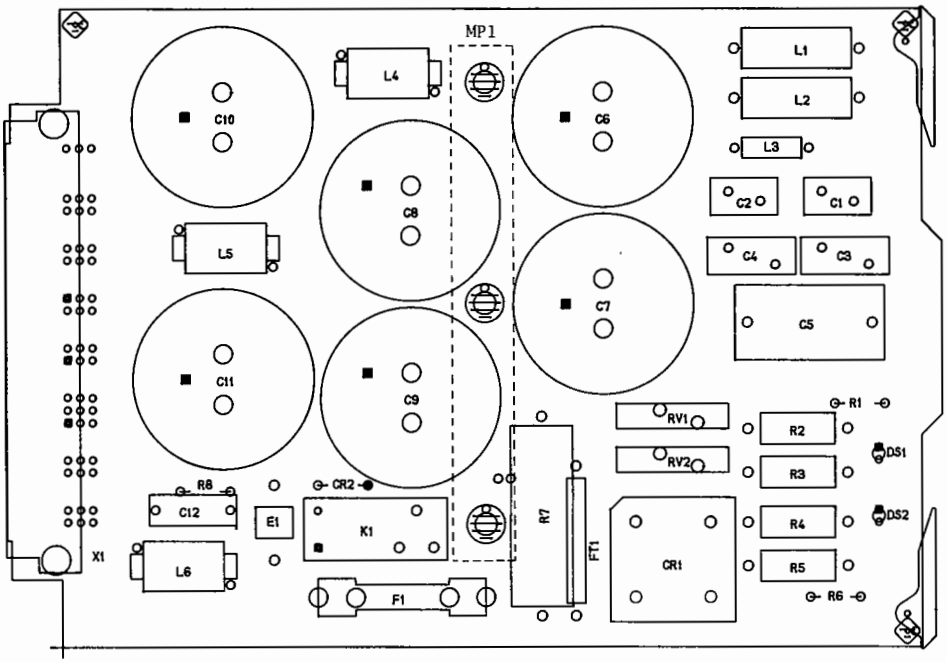

A1 Primary Rectifier Component Locations

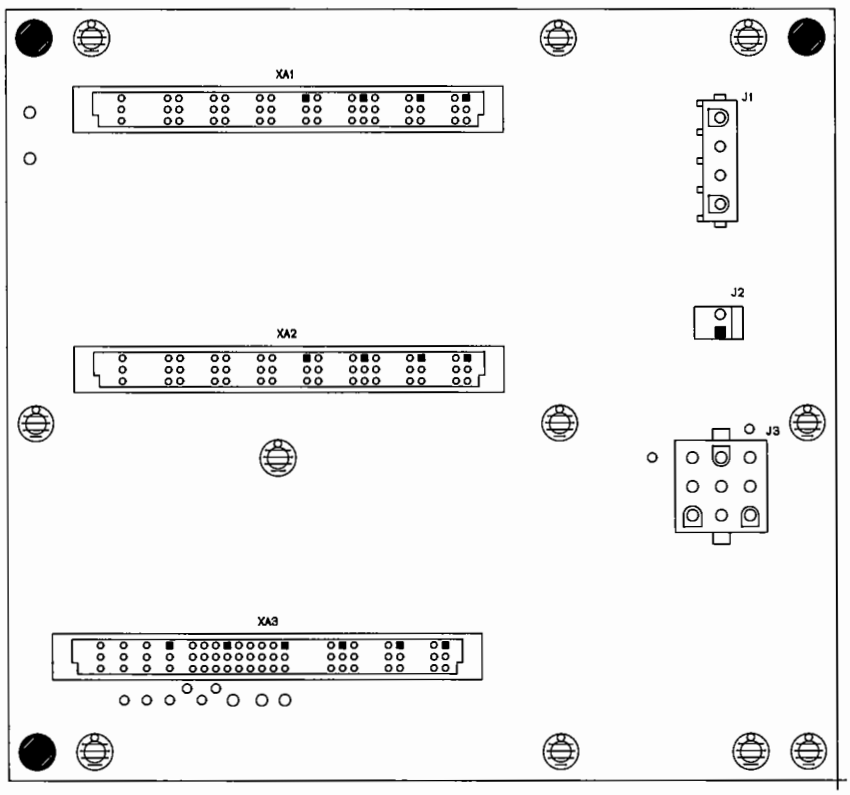

A14 Motherboard Power Supply Component Locations

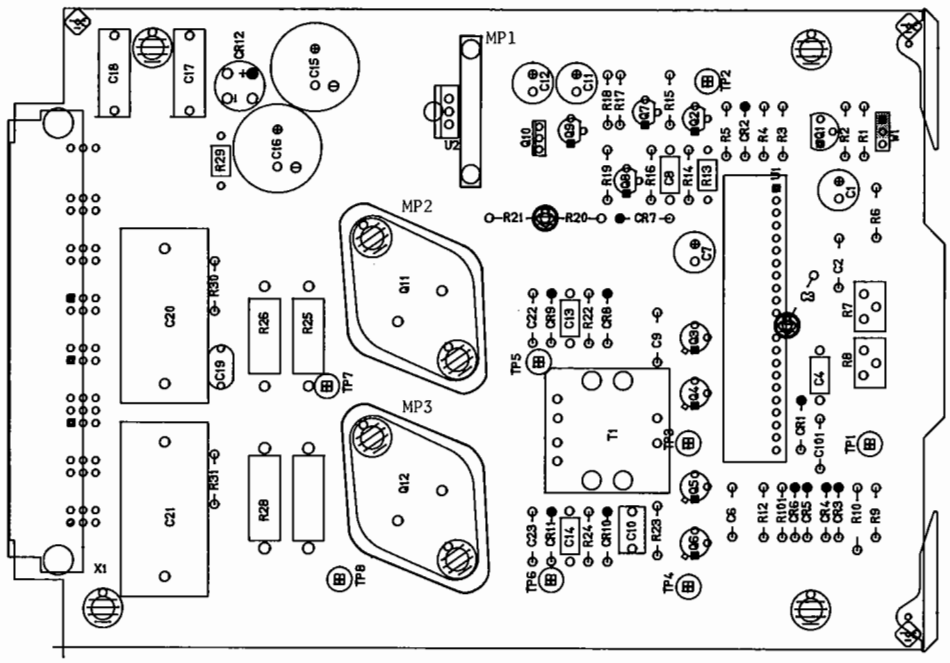

A2 Power Supply Control Component Locations

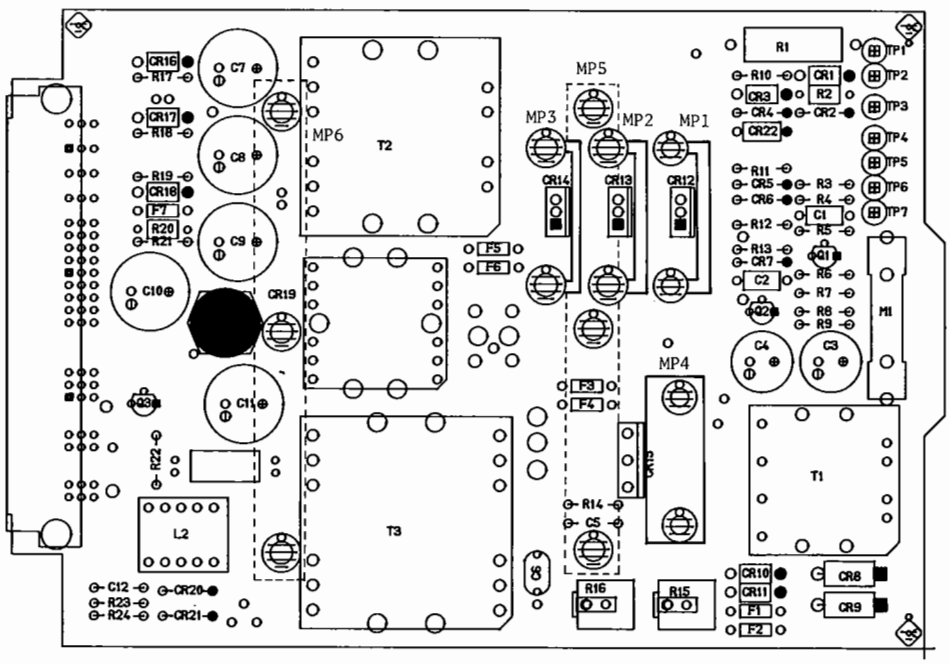

A3 Power Supply Output Component Locations

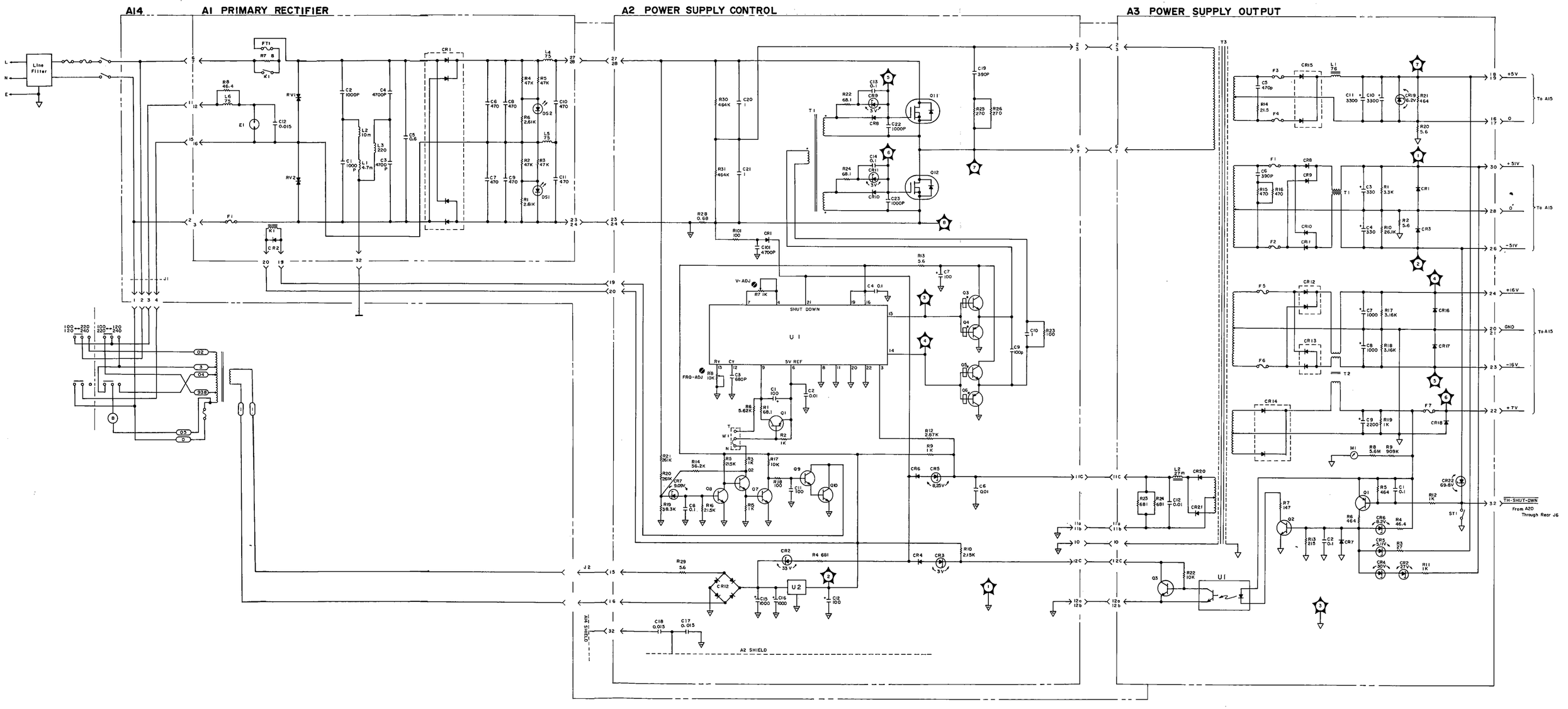
A14
A1 PRIMARY RECTIFIER
A2 POWER SUPPLY CONTROL
A3 POWER SUPPLY OUTPUT
Line Filter
L
N
E
FT1
R7 8
K1
R8 46.4
L6 75
E1
C12 0.015
RV1
RV2
C2 1000P
C4 4700P
C1 1000 P
L2 10m
L3 220
L1 4.7m
C3 4700 P
C5 0.6
CR1
C6 470
C8 470
C7 470
C9 470
R4 47K
R5 47K
R6 2.61K
DS2
R2 47K
R3 47K
R1 2.61K
DS1
L4 75
L5 75
C10 470
C11 470
F1
CR2
J1
100-220 120-240
100-120 220-240
D2
3
D4
938
D5
0
B
R30 464K
R31 464K
C20 1
C21 1
R28 0.68
R101 100
CR1
C101 4700P
T1
R22 68.1
R24 68.1
C13 0.1
C14 0.1
CR9
CR11
CR8
CR10
C22 1000P
C23 1000P
Q11
Q12
C19 390P
R25 270
R26 270
V-ADJ
R7 1K
SHUT DOWN
U1
FRQ-ADJ
R8 10K
C3 680P
5V REF
C1 100
C2 0.01
R6 5.62K
R1 68.1
Q1
R2 1K
R13 5.6
C7 100
C4 0.1
Q3
Q4
Q5
Q6
C10 1
R23 100
C9 100p
R12 2.87K
R9 1K
CR6
CR5
6.25V
C6 0.01
R21 261K
R20 261K
CR7 9.09V
R19 38.3K
R14 56.2K
R5 215K
R3 1K
Q8
Q7
Q2
R17 10K
R18 100
C11 100
Q9
Q10
R16 215K
R9 1K
R10 215K
CR4
CR3
3V
R29 56
CR2
33V
R4 681
CR12
U2
C15 1000
C16 1000
C12 100
C18 0.015
C17 0.015
J2
A4 SHIELD
A2 SHIELD
T3
F3
CR15
L1 76
C5 470p
R14 21.5
F4
C11 3300
C10 3300
CR19 16.2V
R21 464
R20 5.6
F1
CR8
CR9
C6 390P
R15 470
R16 470
CR10
CR11
C3 330
R1 3.3K
C4 330
R10 26.1K
R2 5.6
CR1
CR3
F2
F5
CR12
CR13
F6
C7 1000
R17 3.16K
C8 1000
R18 3.16K
CR16
CR17
T2
CR14
C9 2200
R19 1K
F7
CR18
M1
R8 5.6M
R9 909K
CR22 69.8V
L2 47m
CR20
CR21
R23 681
R24 681
C12 0.01
R7 147
Q2
R13 215
C2 0.1
CR7
Q1
R5 464
R6 464
R12 1K
ST1
CR6 6.2V
R4 46.4
CR5 6.11V
R3 27
CR4 30V
CR2 27V
R11 1K
Q3
R22 10K
U1
+5V
0
+51V
0
-51V
+16V
GND
-16V
+7V
To A15
To A15
To A15
TH-SHUT-DWN
From A20
Through Rear J6

NOTES:

1. REFERENCE DESIGNATORS WITHIN THIS ASSEMBLY ARE ABBREVIATED. PREFIX ABBREVIATION WITH ASSEMBLY NUMBER FOR COMPLETE REFERENCE DESIGNATOR.

2. UNLESS OTHERWISE INDICATED:

   RESISTANCE IS IN OHMS (Ω)
   CAPACITANCE IS IN MICROFARADS (μF)
   INDUCTANCE IS IN MICROHENRIES (μH)

3. ADJUSTMENT NAMES

A2R7	**V-ADJ**
A2R8	**FRQ-ADJ**

CRT DEFLECTION SERVICE SHEET

The CRT Deflection Amplifier generates the deflection yoke drive signal, and supplies +5 V, +12 V, +48 V, and +120 V to the A5 Video Amplifier board, and uses a Flyback Transformer (F.B.T.) to generate the 16 kV CRT anode voltage.

CIRCUIT DESCRIPTION:

The CRT Deflection Amplifier section consists of a voltage regulator, a deflection Signal Processor, a Horizonral ouput amplifier, a vertical output amplifier, a flyback transformer, a pincushion transformer, a high voltage protect circuit, a high current protect circuit, an auto brightness limiter, and a CRT socket.

Voltage Regulator: (A4U3, A4CR14)

A4U3 supplies +48 V to the Horizontal Output Amplifier and to the F.B.T. (A3T3), and supplies +12 V to the Deflection Signal Processor (A4U2 through A4R63).

Deflection Signal Processor: (A4U2)

A4U2 generates the vertical drive signal (a sawtooth current) and the horizontal drive signal (pulse voltage waveform). The X-ray protect circuit prevents X-rays from being produced by preventing excessive current and voltage from being applied to the CRT. The Auto Frequency Control (AFC) section of IC A4U2 uses feedback to stabilize the VCO and also supplies the H SYNC signal to the VCO.

Horizontal Output Amplifier: (A4Q1, A4Q5, A4T1, A4CR6, A4C31, A4C32)

The Horizontal Output amplifier converts the rectangular waveform horizontal drive signal (voltage) into a sawtooth current to drive the horizontal deflection yoke.

Vertical Output Amplifier: (A4U1)

The Vertical Output amplifier drives the vertical deflection yoke.

Flyback Transformer: (A4T3)

The Flyback Transformer (F.B.T.) generates the +16 kV CRT anode voltage, and supplies +5 V, +12 V, +48 V, +120 V to the A5 board. The **FOCUS** and **SCREEN** trim pots are used to adjust the CRT focus and screen voltages.

Pin Cushion Transformer: (A4T2, A4L2, A4C20)

The sawtooth current causes three types of distortion; S character distortion, linearity distortion, and pincushion distortion. S character distortion is minimized by the resonate frequency characteristics of capacitor A4C20 and the combined inductance of A4T2, A4L1, A4L10, A4L2, and the Horizontal deflection yoke. Linearity distortion is minimized by the DC current-inductance characteristics of A4L2. Pincushion distortion is minimized by A4T2 which transforms the parabolic drive signal for the vertical deflection yoke into a drive current.

High Voltage Protect Circuit: (A4CR4, A4CR5, A4R28 to A4R31)

The High Voltage Protect Circuit protects the CRT anode from the excessive voltage. When the voltage at the junction of A4R28 and A4R29 is greater than approximately 10 V, A4CR5 turns **ON**, and A4U2's X-ray protect circuit shuts down the horizontal drive signal.

High Current Protect Circuit: (A4Q6, A4Q7)

The High Current Protect Circuit, protects the CRT anode from the excessive current. When the voltage at A4TP6 is greater than -0.7 V ($\leq$ -0.7 V), A4Q6 and A4Q7 turn **ON**, and A4U2's X-ray protect circuit shuts down the horizontal drive.

Auto Brightness Limiter: (A4CR10)

The Auto Brightness Limiter (ABL) detects the CRT's anode current. When the cathode voltage is greater than approximately -1.4 V ($\leq$ -1.4 V), the ABL circuit sends the ABL signal to the INTENSITY circuit on the A5 board. The ABL signal regulates the INTENSITY voltage.

CRT Socket: (A17)

The CRT Socket interfaces the signals from the A4 and A5 boards to the CRT. A17R1 is used to control the color signal voltage with A5R4 and A5R11.

TROUBLESHOOTING GUIDE:

1. A4W3 connection:

When A4W3 is set to the test position, A4U2 V.OSC stops oscillating,only the H.drive signal is present.

2. TP7, TP8, TP5, TP1 - GND (TP17) Waveforms:

Setting:

CHAN 1:	2 V/div
CHAN 2:	4 V/div
CHAN 3:	10 V/div
CHAN 4:	80 V/div
Time:	10 µsec/div
Trigger:	CH1, -Slope
Trigger Level:	4.5 V
Graph 1:	A4TP7-A4TP17
Graph 2:	A4TP8-A4TP17
Graph 3:	A4TP5-A4TP17
Graph 4:	A4TP1-A4TP17

Waveform:

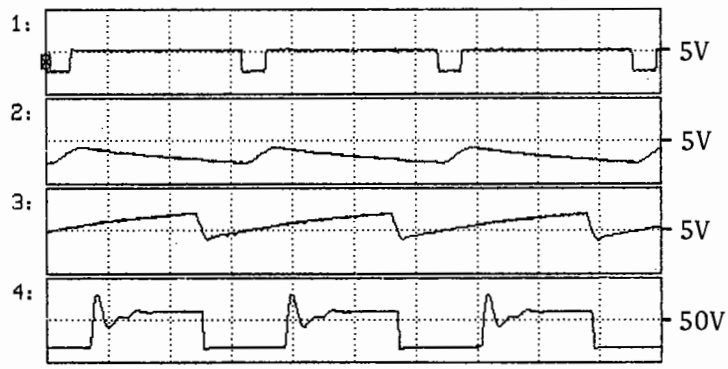

3. TP9, TP4, TP12 - GND (TP17) Waveforms:

Setting:

CHAN 1,2:	5 V/div
CHAN 3:	40 V/div
Time:	5 msec/div
Trigger:	CH1, -Slope
Trigger Level:	5 V
Graph 1:	A4TP9-A4TP17
Graph 2:	A4TP4-A4TP17
Graph 3:	A4TP12-A4TP17

Waveform:

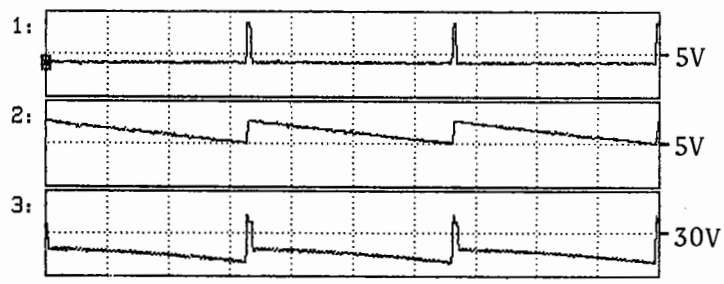

4. TP11, TP2 - GND (TP17) Waveform:

Setting:

CHAN 1:	5 V/div
CHAN 2:	1 V/div
Time:	5 msec/div
Trigger:	CH1, -Slope
Trigger Level:	10 V
Graph 1:	A4TP11-A4TP17
Graph 2:	A4TP2-A4TP17

Waveform:

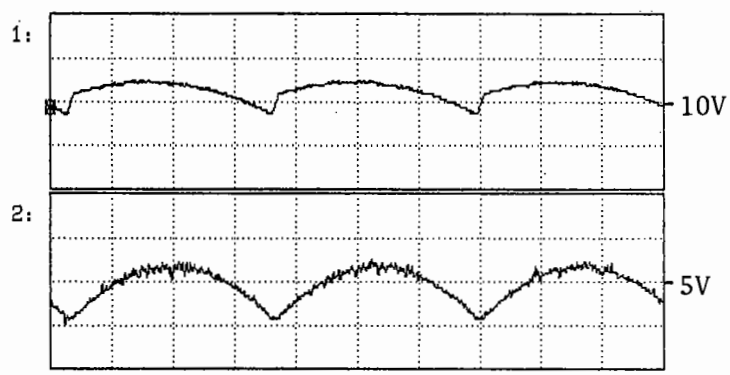

Table 1. A4 Replaceable Parts (1 of 4)

Reference Designator	HP Part Number	C D	Qty.	Description	Mfr Code	Mfr Part Number
A4				CRT DEFLECTION AMPLIFIER		
A4	04195-66504	5	1	DISP. DEFLECT.BD	28480	04195-66504
A4C1	0160-3454	4	3	CAPACITOR-FXD 220PF +-10% 1KVDC CER	28480	0160-3454
A4C2	0160-4811	9	1	CAPACITOR-FXD 270PF +-5% 100VDC CER	28480	0160-4811
A4C3	0160-4835	7	2	CAPACITOR-FXD .1UF +-10% 50VDC CER	28480	0160-4835
A4C4	0180-3233	9	3	CAPACITOR-FXD 22 UF 25VDCW	28480	0180-3233
A4C5	0180-3233	9		CAPACITOR-FXD 22 UF 25VDCW	28480	0180-3233
A4C6	0160-4833	5	2	CAPACITOR-FXD .022UF +-10% 100VDC CER	28480	0160-4833
A4C7	0160-4835	7		CAPACITOR-FXD .1UF +-10% 50VDC CER	28480	0160-4835
A4C8	0160-4808	4	1	CAPACITOR-FXD 470PF +-5% 100VDC CER	28480	0160-4808
A4C9	0180-2697	7	3	CAPACITOR-FXD 10UF+-10% 25VDC TA	28480	0180-2697
A4C10	0160-4831	3	3	CAPACITOR-FXD 4700PF +-10% 100VDC CER	28480	0160-4831
A4C11	0180-3185	0	1	CAPACITOR-FXD 100UF+-20% 35VDC AL	28480	0180-3185
A4C12	0180-3585	4	1	CAPACITOR-FXD 1UF+-20% 250VDC AL	28480	0180-3585
A4C13	0180-2697	7		CAPACITOR-FXD 10UF+-10% 25VDC TA	28480	0180-2697
A4C14	0180-3471	7	2	CAPACITOR-FXD 470UF+-20% 25VDC AL	28480	0180-3471
A4C15	0160-4832	4	2	CAPACITOR-FXD .01UF +-10% 100VDC CER	28480	0160-4832
A4C16	0180-0291	3	1	CAPACITOR-FXD 1UF+-10% 35VDC TA	56289	150D105X9035A2
A4C17	0160-4822	2	1	CAPACITOR-FXD 1000PF +-5% 100VDC CER	28480	0160-4822
A4C18	0180-3469	3	1	CAPACITOR-FXD 100UF+-20% 25VDC AL	28480	0180-3469
A4C19	0160-6403	9	1	CAPACITOR-FXD 390PF +-10% 2KVDC CER	10380	DE0807R391K2K
A4C20	0160-6361	8	1	CAPACITOR .82UF 200V	28480	0160-6361
A4C21	0180-3233	9		CAPACITOR-FXD 22 UF 25VDCW	28480	0180-3233
A4C22	0160-2222	2	1	CAPACITOR-FXD 1500PF +-5% 300VDC MICA	28480	0160-2222
A4C23	0160-4831	3		CAPACITOR-FXD 4700PF +-10% 100VDC CER	28480	0160-4831
A4C24	0160-2226	6	1	CAPACITOR-FXD 2200PF +-5% 300VDC MICA	28480	0160-2226
A4C25	0160-4831	3		CAPACITOR-FXD 4700PF +-10% 100VDC CER	28480	0160-4831
A4C26	0160-4832	4		CAPACITOR-FXD .01UF +-10% 100VDC CER	28480	0160-4832
A4C27	0160-4833	5		CAPACITOR-FXD .022UF +-10% 100VDC CER	28480	0160-4833
A4C28	0180-2984	5	1	CAPACITOR-FXD 47UF+-20% 50VDC AL	28480	0180-2984
A4C29	0180-3471	7		CAPACITOR-FXD 470UF+-20% 25VDC AL	28480	0180-3471
A4C30	0180-3597	8	1	CAPACITOR-FXD 47UF+-20% 25VDC AL	28480	0180-3597
A4C31	0160-6362	9	1	CAPACITOR .0082U 1250V	28480	0160-6362
A4C32	0160-6402	8	1	CAPACITOR-FXD 680PF +-10% 2KVDC CER	10380	DE1010R681K2K
A4C33	0160-3454	4		CAPACITOR-FXD 220PF +-10% 1KVDC CER	28480	0160-3454
A4C34	0180-2979	8	1	CAPACITOR-FXD 220UF+-20% 16VDC AL	28480	0180-2979
A4C35	0160-3454	4		CAPACITOR-FXD 220PF +-10% 1KVDC CER	28480	0160-3454
A4C36	0180-2986	7	1	CAPACITOR-FXD 330UF+-20% 50VDC AL	28480	0180-2986
A4C37	0180-2697	7		CAPACITOR-FXD 10UF+-10% 25VDC TA	28480	0180-2697
A4C38	0160-6342	5	1	CAPACITOR 1U 100V FILM	28480	0160-6342
A4C39	0180-3657	1	1	CAPACITOR-FXD 1000UF+-20% 63VDC AL	28480	0180-3657
A4C40	0160-3877	5	2	CAPACITOR-FXD 100PF +-20% 200VDC CER	28480	0160-3877
A4C41	0160-3877	5		CAPACITOR-FXD 100PF +-20% 200VDC CER	28480	0160-3877
A4C42				NOT ASSIGNED		
A4C43				NOT ASSIGNED		
A4C44	0160-0127	2	1	CAPACITOR-FXD 1UF +-20% 50VDC CER	28480	0160-0127
A4C45	0160-6753	2	2	CAPACITOR-FXD .22UF +-5% 100VDC	09814	ECQ-E1224JN
A4C46	0160-6753	2		CAPACITOR-FXD .22UF +-5% 100VDC	09814	ECQ-E1224JN
A4C47	0180-3658	2	1	CAPACITOR-FXD 22UF+-20% 200VDC AL	28480	0180-3658
A4C48	0180-1085	5	1	CAPACITOR-FXD 4.7UF 16VDC TA	28480	0180-1085
A4C49				NOT ASSIGNED		
A4C50	0180-3363	6	1	CAPACITOR-FXD 22UF+-20% 25VDC AL	28480	0180-3363
A4CR1	1901-0050	3	3	DIODE-SWITCHING 80V 200MA 2NS DO-35	9N171	1N4150
A4CR2	1901-0050	3		DIODE-SWITCHING 80V 200MA 2NS DO-35	9N171	1N4150

*** Indicates factory selected value.**

Table 1. A4 Replaceable Parts (2 of 4)

Reference Designator	HP Part Number	C D	Qty.	Description	Mfr Code	Mfr Part Number
A4CR3	1901-1065	2	7	DIODE-PWR RECT 1N4936 400V 1A 200NS	14936	1N4936
A4CR4	1901-1065	2		DIODE-PWR RECT 1N4936 400V 1A 200NS	14936	1N4936
A4CR5	1902-3150	2	1	DIODE-ZNR 9.09V 2% DO-35 PD=.4W	28480	1902-3150
A4CR6	1901-1171	1	1	DIO GH3E 1300V	28480	1901-1171
A4CR7	1901-1065	2		DIODE-PWR RECT 1N4936 400V 1A 200NS	14936	1N4936
A4CR8	1901-0050	3		DIODE-SWITCHING 80V 200MA 2NS DO-35	9N171	1N4150
A4CR9	1901-1065	2		DIODE-PWR RECT 1N4936 400V 1A 200NS	14936	1N4936
A4CR10	1901-1170	0	1	DIO 1SS83 300V	28480	1901-1170
A4CR11	1901-1065	2		DIODE-PWR RECT 1N4936 400V 1A 200NS	14936	1N4936
A4CR12	1901-1065	2		DIODE-PWR RECT 1N4936 400V 1A 200NS	14936	1N4936
A4CR13				NOT ASSIGNED		
A4CR14	1902-1286	1	1	DIODE-ZNR 1N5342B 6.8V 5% PD=5W TC=+200%	04713	1N5342B
A4CR15	1901-1065	2		DIODE-PWR RECT 1N4936 400V 1A 200NS	14936	1N4936
A4F1	2110-0741	3	1	FUSE 1A 125V NTD UL	28480	2110-0741
A4J1	1251-3837	1	1	CONN-UTIL MT-LK 4-CKT 4-CONT	28480	1251-3837
A4J2	1251-4938	5	1	CONNECTOR 3-PIN M METRIC POST TYPE	28480	1251-4938
A4J3	1251-3024	8	2	CONN-POST TYPE .100-PIN-SPCG 26-CONT	28480	1251-3024
A4J4	1251-3024	8		CONN-POST TYPE .100-PIN-SPCG 26-CONT	28480	1251-3024
A4J5	1251-4484	6	2	CONN-POST TYPE .100-PIN-SPCG 4-CONT	28480	1251-4484
A4J6	1251-4484	6		CONN-POST TYPE .100-PIN-SPCG 4-CONT	28480	1251-4484
A4J7	1251-4822	6	1	CONN-POST TYPE .100-PIN-SPCG 3-CONT	28480	1251-4822
A4L1	9140-1047	4	1	H WIDTH COIL	28480	9140-1047
A4L2	9140-1134	0	1	LINEARITY COIL L: 35UH +-20% @ 1.5A, 19	06383	57027
A4L3	9140-1056	5	1	COIL 390UH	28480	9140-1056
A4L4	9140-1278	3	1	INDUCTOR 68UH 10% 7.5D-MM Q=45	28480	9140-1278
A4L5	9100-3313	7	1	INDUCTOR RF-CH-MLD 22UH 5%	28480	9100-3313
A4L6-A4L9				NOT ASSIGNED		
A4L10	9140-1314	8	1	IDCTR 4.7UH 20%		
A4MP1	1205-0310		1	HEAT SINK		
A4MP2	1205-0513		1	HEAT-SNIK		
	0515-1550		1	SCREW PAN HEAD		
A4Q1	1854-0813	5	1	TRANSISTOR NPN 2N3501S SI TO-39 PD=1W	28480	1854-0813
A4Q2	1853-0204	6	1	TRANSISTOR PNP 2N4920 SI PD=30W FT=3MHZ	04713	2N4920
A4Q3	1853-0459	3	2	TRANSISTOR PNP SI PD=625MW FT=200MHZ	28480	1853-0459
A4Q4	1854-0810	2	2	TRANSISTOR NPN SI PD=625MW FT=200MHZ	28480	1854-0810
A4Q5	1854-1075	3	1	TRANSISTOR NPN SI TO-3 PD=50W	28480	1854-1075
A4Q6	1853-0459	3		TRANSISTOR PNP SI PD=625MW FT=200MHZ	28480	1853-0459
A4Q7	1854-0810	2		TRANSISTOR NPN SI PD=625MW FT=200MHZ	28480	1854-0810
A4Q8	1854-0389	0	1	TRANSISTOR NPN 2N4922 SI PD=30W FT=3MHZ	04713	2N4922
A4Q9	1853-0084	0	1	TRANSISTOR PNP 2N4918 SI PD=30W FT=3MHZ	04713	2N4918
A4R1	0757-0274	5	2	RESISTOR 1.21K 1% .125W F TC=0+-100	24546	CT4-1/8-T0-1211-F
A4R2	0698-0082	7	4	RESISTOR 464 1% .125W F TC=0+-100	24546	CT4-1/8-T0-4640-F
A4R3	0698-4037	0	1	RESISTOR 46.4 1% .125W F TC=0+-100	28480	0698-4037
A4R4	0698-3637	4	2	RESISTOR 820 5% 2W MO TC=0+-200	28480	0698-3637
A4R5	0698-3637	4		RESISTOR 820 5% 2W MO TC=0+-200	28480	0698-3637
A4R6	0698-3401	0	1	RESISTOR 215 1% .5W F TC=0+-100	28480	0698-3401
A4R7	0757-0401	0	2	RESISTOR 100 1% .125W F TC=0+-100	24546	CT4-1/8-T0-101-F
A4R8	0757-0401	0		RESISTOR 100 1% .125W F TC=0+-100	24546	CT4-1/8-T0-101-F

*** Indicates factory selected value.**

Table 1. A4 Replaceable Parts (3 of 4)

Reference Designator	HP Part Number	C D	Qty.	Description	Mfr Code	Mfr Part Number
A4R9	0757-0199	3	1	RESISTOR 21.5K 1% .125W F TC=0+-100	24546	CT4-1/8-T0-2152-F
A4R10	0757-0439	4	2	RESISTOR 6.81K 1% .125W F TC=0+-100	24546	CT4-1/8-T0-6811-F
A4R11	0757-0459	8	3	RESISTOR 56.2K 1% .125W F TC=0+-100	24546	CT4-1/8-T0-5622-F
A4R12	0757-1094	9	2	RESISTOR 1.47K 1% .125W F TC=0+-100	24546	CT4-1/8-T0-1471-F
A4R13	0757-1094	9		RESISTOR 1.47K 1% .125W F TC=0+-100	24546	CT4-1/8-T0-1471-F
A4R14	0757-0279	0	5	RESISTOR 3.16K 1% .125W F TC=0+-100	24546	CT4-1/8-T0-3161-F
A4R15	0698-3136	8	3	RESISTOR 17.8K 1% .125W F TC=0+-100	24546	CT4-1/8-T0-1782-F
A4R16	0757-0180	2	1	RESISTOR 31.6 1% .125W F TC=0+-100	28480	0757-0180
A4R17	0698-0082	7		RESISTOR 464 1% .125W F TC=0+-100	24546	CT4-1/8-T0-4640-F
A4R18	0757-0280	3	2	RESISTOR 1K 1% .125W F TC=0+-100	24546	CT4-1/8-T0-1001-F
A4R19	0683-0825	5	1	RESISTOR 8.2 5% .25W CF TC=0-400	01121	CB82G5
A4R20	0757-0346	2	3	RESISTOR 10 1% .125W F TC=0+-100	28480	0757-0346
A4R21	0698-0084	9	3	RESISTOR 2.15K 1% .125W F TC=0+-100	24546	CT4-1/8-T0-2151-F
A4R22	0698-0082	7		RESISTOR 464 1% .125W F TC=0+-100	24546	CT4-1/8-T0-4640-F
A4R23	0757-0441	8	5	RESISTOR 8.25K 1% .125W F TC=0+-100	24546	CT4-1/8-T0-8251-F
A4R24	0757-0279	0		RESISTOR 3.16K 1% .125W F TC=0+-100	24546	CT4-1/8-T0-3161-F
A4R25	0757-0441	8		RESISTOR 8.25K 1% .125W F TC=0+-100	24546	CT4-1/8-T0-8251-F
A4R26	0757-0441	8		RESISTOR 8.25K 1% .125W F TC=0+-100	24546	CT4-1/8-T0-8251-F
A4R27	0699-1705	5	2	RESISTOR 68 5% .25W F TC=0+-350	28480	0699-1705
A4R28	0757-0465	6	1	RESISTOR 100K 1% .125W F TC=0+-100	24546	CT4-1/8-T0-1003-F
A4R29	0698-4477	2	1	RESISTOR 10.5K 1% .125W F TC=0+-100	24546	CT4-1/8-T0-1052-F
A4R30	0698-3155	1	2	RESISTOR 4.64K 1% .125W F TC=0+-100	24546	CT4-1/8-T0-4641-F
A4R31	0757-0279	0		RESISTOR 3.16K 1% .125W F TC=0+-100	24546	CT4-1/8-T0-3161-F
A4R32	0757-0441	8		RESISTOR 8.25K 1% .125W F TC=0+-100	24546	CT4-1/8-T0-8251-F
A4R33	0757-0274	5		RESISTOR 1.21K 1% .125W F TC=0+-100	24546	CT4-1/8-T0-1211-F
A4R34	0757-0439	4		RESISTOR 6.81K 1% .125W F TC=0+-100	24546	CT4-1/8-T0-6811-F
A4R35	0698-3159	5	2	RESISTOR 26.1K 1% .125W F TC=0+-100	24546	CT4-1/8-T0-2612-F
A4R36	0757-0397	3	1	RESISTOR 68.1 1% .125W F TC=0+-100	24546	CT4-1/8-T0-68R1-F
A4R37	0757-0346	2		RESISTOR 10 1% .125W F TC=0+-100	28480	0757-0346
A4R38	0757-0442	9	1	RESISTOR 10K 1% .125W F TC=0+-100	24546	CT4-1/8-T0-1002-F
A4R39				NOT ASSIGNED		
A4R40	0757-0288	1	1	RESISTOR 9.09K 1% .125W F TC=0+-100	19701	5033R-1/8-T0-9091-F
A4R41	0698-3159	5		RESISTOR 26.1K 1% .125W F TC=0+-100	24546	CT4-1/8-T0-2612-F
A4R42	0757-0441	8		RESISTOR 8.25K 1% .125W F TC=0+-100	24546	CT4-1/8-T0-8251-F
A4R43	0698-3153	9	3	RESISTOR 3.83K 1% .125W F TC=0+-100	24546	CT4-1/8-T0-3831-F
A4R44	0698-0090	7	1	RESISTOR 464 1% .5W F TC=0+-100	28480	0698-0090
A4R45	2100-0558	9	1	RESISTOR-TRMR 20K 10% C TOP-ADJ 1-TRN	28480	2100-0558
A4R46	2100-3383	4	1	RESISTOR-TRMR 50 10% C TOP-ADJ 1-TRN	28480	2100-3383
A4R47	2100-3252	6	3	RESISTOR-TRMR 5K 10% C TOP-ADJ 1-TRN	28480	2100-3252
A4R48	2100-3252	6		RESISTOR-TRMR 5K 10% C TOP-ADJ 1-TRN	28480	2100-3252
A4R49	2100-3252	6		RESISTOR-TRMR 5K 10% C TOP-ADJ 1-TRN	28480	2100-3252
A4R50	0698-3452	1	1	RESISTOR 147K 1% .125W F TC=0+-100	24546	CT4-1/8-T0-1473-F
A4R51	0698-3153	9		RESISTOR 3.83K 1% .125W F TC=0+-100	24546	CT4-1/8-T0-3831-F
A4R52	0698-3153	9		RESISTOR 3.83K 1% .125W F TC=0+-100	24546	CT4-1/8-T0-3831-F
A4R53	0698-0082	7		RESISTOR 464 1% .125W F TC=0+-100	24546	CT4-1/8-T0-4640-F
A4R54	0757-0280	3		RESISTOR 1K 1% .125W F TC=0+-100	24546	CT4-1/8-T0-1001-F
A4R55	0757-0279	0		RESISTOR 3.16K 1% .125W F TC=0+-100	24546	CT4-1/8-T0-3161-F
A4R56	0698-3441	8	1	RESISTOR 215 1% .125W F TC=0+-100	24546	CT4-1/8-T0-215R-F
A4R57	0757-0459	8		RESISTOR 56.2K 1% .125W F TC=0+-100	24546	CT4-1/8-T0-5622-F
A4R58	0698-3438	3	1	RESISTOR 147 1% .125W F TC=0+-100	24546	CT4-1/8-T0-147R-F
A4R59	0699-1704	4	2	RESISTOR 5.6 .5% .25W F TC=0+-350	28480	0699-1704
A4R60	0699-1704	4		RESISTOR 5.6 .5% .25W F TC=0+-350	28480	0699-1704

*** Indicates factory selected value.**

Table 1. A4 Replaceable Parts (4 of 4)

Reference Designator	HP Part Number	C D	Qty.	Description	Mfr Code	Mfr Part Number
A4R61	0757-0279	0		RESISTOR 3.16K 1% .125W F TC=0+-100	24546	CT4-1/8-T0-3161-F
A4R62	0757-0459	8		RESISTOR 56.2K 1% .125W F TC=0+-100	24546	CT4-1/8-T0-5622-F
A4R63	0764-0042	0	1	RESISTOR 2.2K 5% 2W MO TC=0+-200	28480	0764-0042
A4R64	0698-3132	4	1	RESISTOR 261 1% .125W F TC=0+-100	24546	CT4-1/8-T0-2610-F
A4R65	0698-3136	8		RESISTOR 17.8K 1% .125W F TC=0+-100	24546	CT4-1/8-T0-1782-F
A4R66	0698-3136	8		RESISTOR 17.8K 1% .125W F TC=0+-100	24546	CT4-1/8-T0-1782-F
A4R67	2100-0567	0	1	RESISTOR-TRMR 2K 10% C TOP-ADJ 1-TRN	28480	2100-0567
A4R68	0757-0417	8	2	RESISTOR 562 1% .125W F TC=0+-100	24546	CT4-1/8-T0-562R-F
A4R69				NOT ASSIGNED		
A4R70				NOT ASSIGNED		
A4R71	0698-3155	1		RESISTOR 4.64K 1% .125W F TC=0+-100	24546	CT4-1/8-T0-4641-F
A4R72	0698-0084	9		RESISTOR 2.15K 1% .125W F TC=0+-100	24546	CT4-1/8-T0-2151-F
A4R73	0757-0417	8		RESISTOR 562 1% .125W F TC=0+-100	24546	CT4-1/8-T0-562R-F
A4R74	0698-0084	9		RESISTOR 2.15K 1% .125W F TC=0+-100	24546	CT4-1/8-T0-2151-F
A4R75	0757-0346	2		RESISTOR 10 1% .125W F TC=0+-100	28480	0757-0346
A4R76	0699-1705	5		RESISTOR 68 5% .25W F TC=0+-350	28480	0699-1705
A4R77	0698-3428	1	1	RESISTOR 14.7 1% .125W F TC=0+-100	03888	PME55-1/8-T0-14R7-F
A4R78	1810-0277	3	1	NETWORK-RES 10-SIP 2.2K OHM X 9	91637	CSC10A01-222G
A4R79				NOT ASSIGNED		
A4R80	0698-3430	5	2	RESISTOR 21.5 1% .125W F TC=0+-100	03888	PME55-1/8-T0-21R5-F
A4R81	0698-3430	5		RESISTOR 21.5 1% .125W F TC=0+-100	03888	PME55-1/8-T0-21R5-F
A4T1	9100-4498	1	1	TRANSFORMER INDUCTANCE: 25.7 MH +-10% @	06383	57032
A4T2	9100-4487	8	1	TRANSFORMER L(1-2): 328 MH+-20%; L(3-4)	06383	PC25IS
A4T3	9100-4695	0	1	TRANSFORMER FLYBACK (NOT INCLUDED IN -66504)		
A4U1	1826-1345	1	1	IC MISC PLSTC-SIL PKG	28480	1826-1345
A4U2	1826-1344	0	1	IC MISC 18-DIP-P PKG	28480	1826-1344
A4U3	1826-0393	7	1	IC V RGLTR-ADJ-POS 1.2/37V TO-220 PKG	28480	1826-0393
A4U4	1820-1199	1	1	IC INV TTL LS HEX 1-INP	01295	SN74LS04N
A4U5	1826-0122	0	1	IC 7805 V RGLTR TO-220	07263	7805UC
A4W1	1258-0141	8	2	JUMPER-REMOVABLE FOR 0.025 IN SQ PINS	28480	1258-0141
A4W2	1258-0141	8		JUMPER-REMOVABLE FOR 0.025 IN SQ PINS	28480	1258-0141
A4W3	04194-61629	4	1	WIRE ASSEMBLY 2 PIN	28480	04194-61629
	04194-08001	4	1	CRT CONTACT (NOT INCLUDED IN -66504)		

*** Indicates factory selected value.**

Table 2. A17 Replaceable Parts

Reference Designator	HP Part Number	C D	Qty.	Description	Mfr Code	Mfr Part Number
A17				CRT SOCKET		
A17	04195-66517	0	1	CRT SOCKET BD AY	28480	04195-66517
A17C1	0160-3455	5	1	CAPACITOR-FXD 470PF +-10% 1KVDC CER	28480	0160-3455
A17C2	0160-2902	5	1	CAPACITOR-FXD .01UF +-20% 1KVDC CER	28480	0160-2902
A17C3	0160-3202	0	2	CAPACITOR-FXD 1800PF +-20% 3KVDC CER	28480	0160-3202
A17C4	0160-3202	0		CAPACITOR-FXD 1800PF +-20% 3KVDC CER	28480	0160-3202
A17DS1	2140-0546	9	3	ER DIVISION	28480	2140-0546
A17DS2	2140-0546	9		ER DIVISION	28480	2140-0546
A17DS3	2140-0546	9		ER DIVISION	28480	2140-0546
A17DS4	2140-0013	5	1	LAMP-GLOW 5AB-A 70/57VDC 300UA T-2-BULB	08806	5AB-A(NE-23A)
A17E1	0837-0338	2	1		28480	0837-0338
A17J1	PPNR34043	0	1	SOCKET CRT	28480	PPNR34043
A17J2	1251-5066	2	1	CONN-POST TYPE 2.5-PIN-SPCG 2-CONT	28480	1251-5066
A17L1	9140-0114	4	3	INDUCTOR RF-CH-MLD 10UH 10%	28480	9140-0114
A17L2	9140-0114	4		INDUCTOR RF-CH-MLD 10UH 10%	28480	9140-0114
A17L3	9140-0114	4		INDUCTOR RF-CH-MLD 10UH 10%	28480	9140-0114
A17L4	9140-1260	3	1	INDUCTOR 27UH +-10% 6.6D-MM Q=60	06383	ELF0607 SKI-270K
A17R1	2100-4193	9	1	RESISTOR-TRMR 90M		
A17R2	0686-2245	3	1	RESISTOR 220K 5% .5W CC TC=0+882	01121	EB2245
A17R3	0686-3315	0	3	RESISTOR 330 5% .5W CC TC=0+529	01121	EB3315
A17R4	0686-3315	0		RESISTOR 330 5% .5W CC TC=0+529	01121	EB3315
A17R5	0686-3315	0		RESISTOR 330 5% .5W CC TC=0+529	01121	EB3315
A17R6	0686-1055	1	1	RESISTOR 1M 5% .5W CC TC=0+1000	01121	EB1055
A17R7	0687-1041	7	1	RESISTOR 100K 10% .5W CC TC=0+882	01121	EB1041
A17W1	04194-61626	1	1	WIRE ASSEMBLY 3PIN	28480	04194-61626
A17W2	04194-61627	2	1	WIRE ASSEMBLY 6PIN	28480	04194-61627

*** Indicates factory selected value.**

NOTES

Table 3. A4 Connector Pin Assignments

A4J3

R1 GND	► 1	2	R1-VIDEO
R2 GND	3	4	R2-VIDEO
G1 GND	5	6	G1-VIDEO
G2 GND	7	8	G2-VIDEO
B1 GND	9	10	B1-VIDEO
B2 GND	11	12	B2-VIDEO
H-GND	13	14	$\overline{\text{HSYNC}}$
V-GND	15	16	$\overline{\text{VSYNC}}$
	17	18	
0 V	19	20	0 V
	21	22	
+51 V	23	24	+51 V
	25	26	

A4J4

	► 1	2	
+120 V	3	4	+120 V
	5	6	
+48 V	7	8	+48 V
	9	10	
	11	12	
B2-VIDEO	13	14	B1-VIDEO
G2-VIDEO	15	16	G1-VIDEO
R2-VIDEO	17	18	R1-VIDEO
+5 V	19	20	+5 V
+12 V	21	22	+12 V
	23	24	
ABL	25	26	

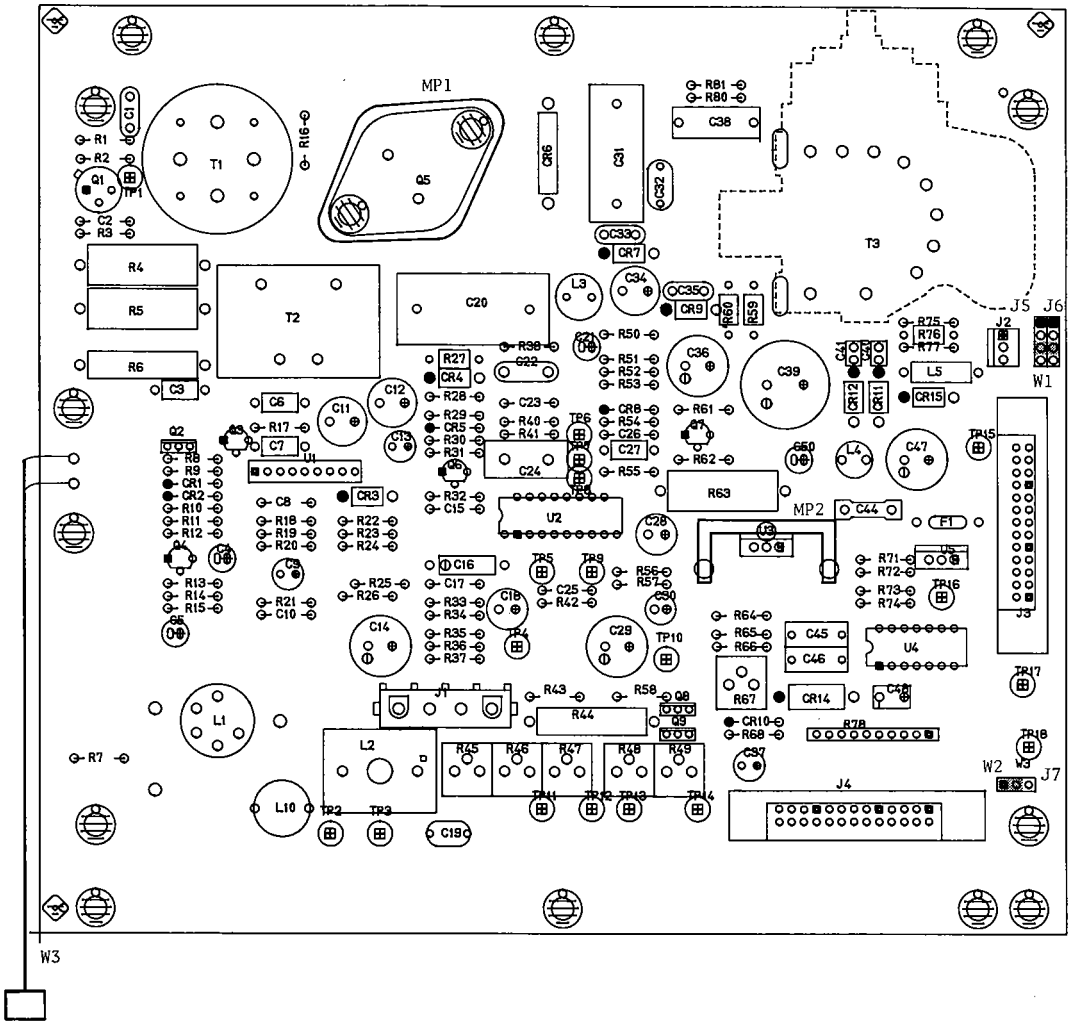

A4 CRT Deflection Amplifier Component Locations

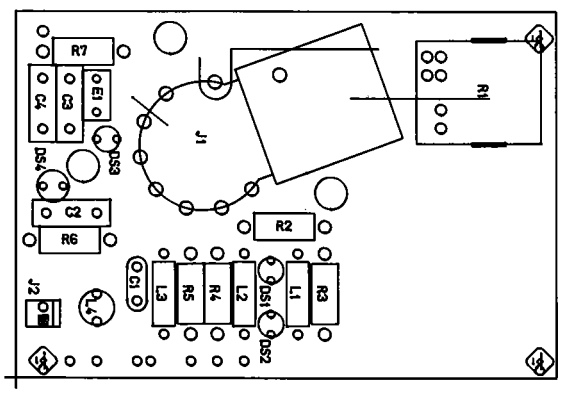

A17 CRT Socket Component Locations

A4 CRT DEFLECTION

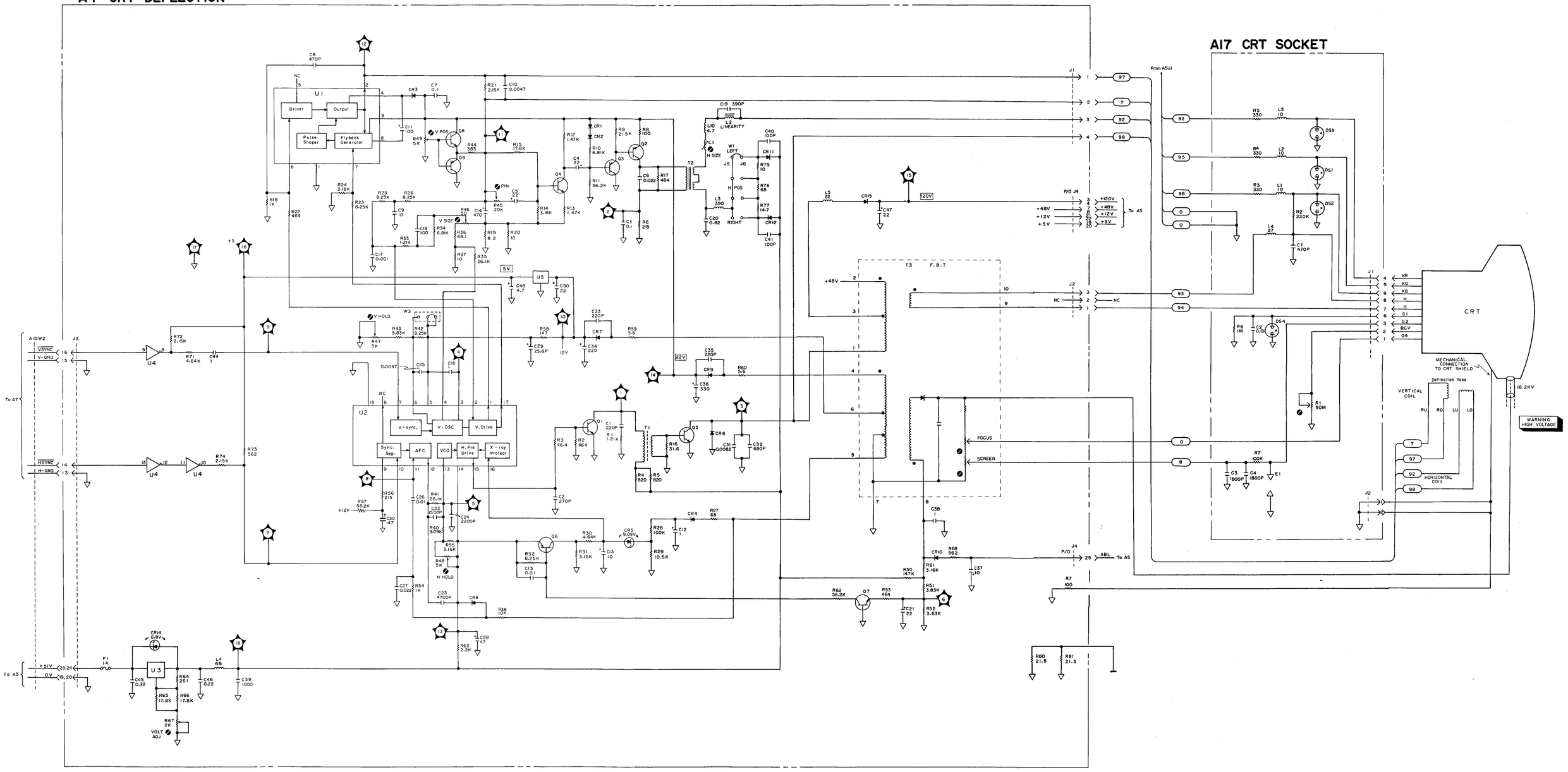

NOTES:

1. REFERENCE DESIGNATORS WITHIN THIS ASSEMBLY ARE ABBREVIATED. PREFIX ABBREVIATION WITH ASSEMBLY NUMBER FOR COMPLETE REFERENCE DESIGNATOR.

2. UNLESS OTHERWISE INDICATED:

   RESISTANCE IN OHMS (Ω)
   CAPACITANCE IN MICROFARADS (μF)
   INDUCTANCE IN MICROHENRIES (μH)

3. ADJUSTMENT LABELS

A4L1	H SIZE
A4R45	PIN
A4R46	V SIZE
A4R47	V HOLD
A4R49	V POS
A4R67	VOLT ADJ
A4T3	(FOCUS and SCREEN)
A17R1	

4. TRANSFORMER FLYBACK (P/N 9100-4695) AND CRT CONTACT (P/N 04194-08001) ARE NOT INCLUDED IN THE A4 BOARD (04195-66504). WHEN REPLACING THE A4 BOARD, DISSOLDER THE TRANSFORMER, AND REMOVE THE CONTACT, AND USE THEM FOR THE NEW A4 BOARD.

CRT VIDEO AMPLIFIER SERVICE SHEET

The CRT Video Amplifier is used to control the colors displayed on the CRT.

CIRCUIT DESCRIPTION:

The A5 CRT Video Amplifier board consists of video amplifiers, intensity circuit, and the degausser circuit. Figure 1 shows the block diagram of the A5 CRT Video Amplifier board.

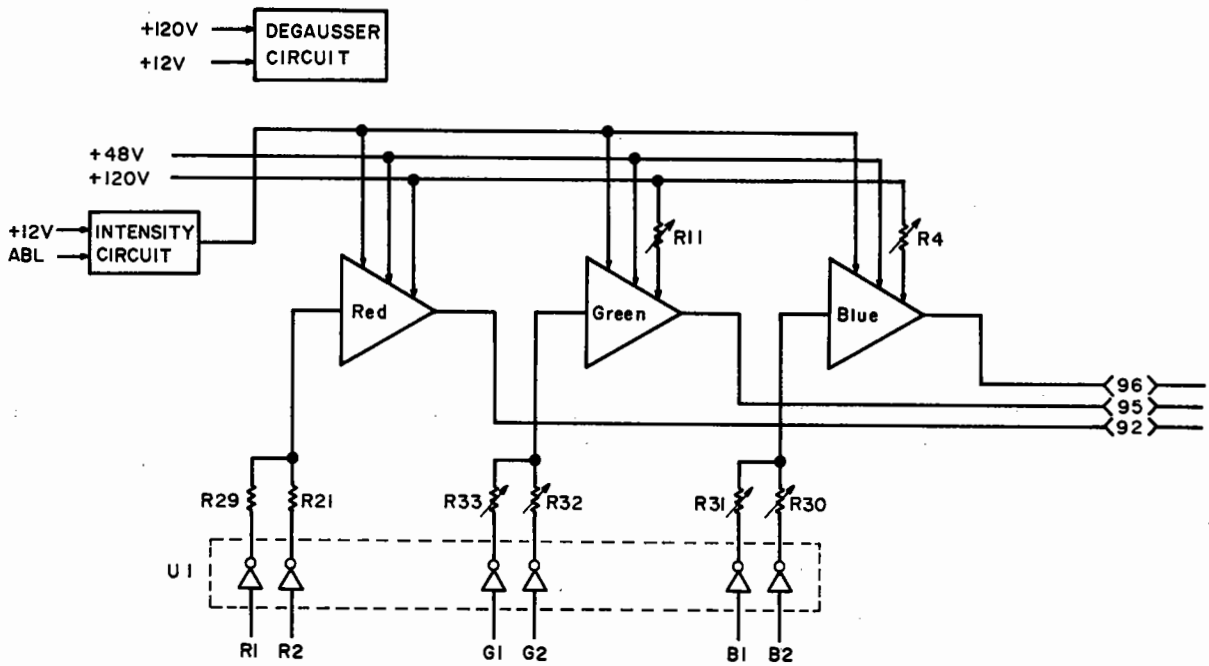

Figure 1. CRT Video Amplifier Block Diagram

Video Amplifier: (A5Q1 to A5Q9, A5CR4 to A5CR9)

The Video Amplifiers amplify the Red/Green/Blue color signals to control the colors displayed on the CRT. Each color signal consists of 2-bits of data (Red: R1, R2, Green: G1, G2, Blue: B1, B2) which gives four brightness levels, as shown in Figure 2. Figure 2 shows a typical model of a video amplifier (the video amplifiers are almost the same).

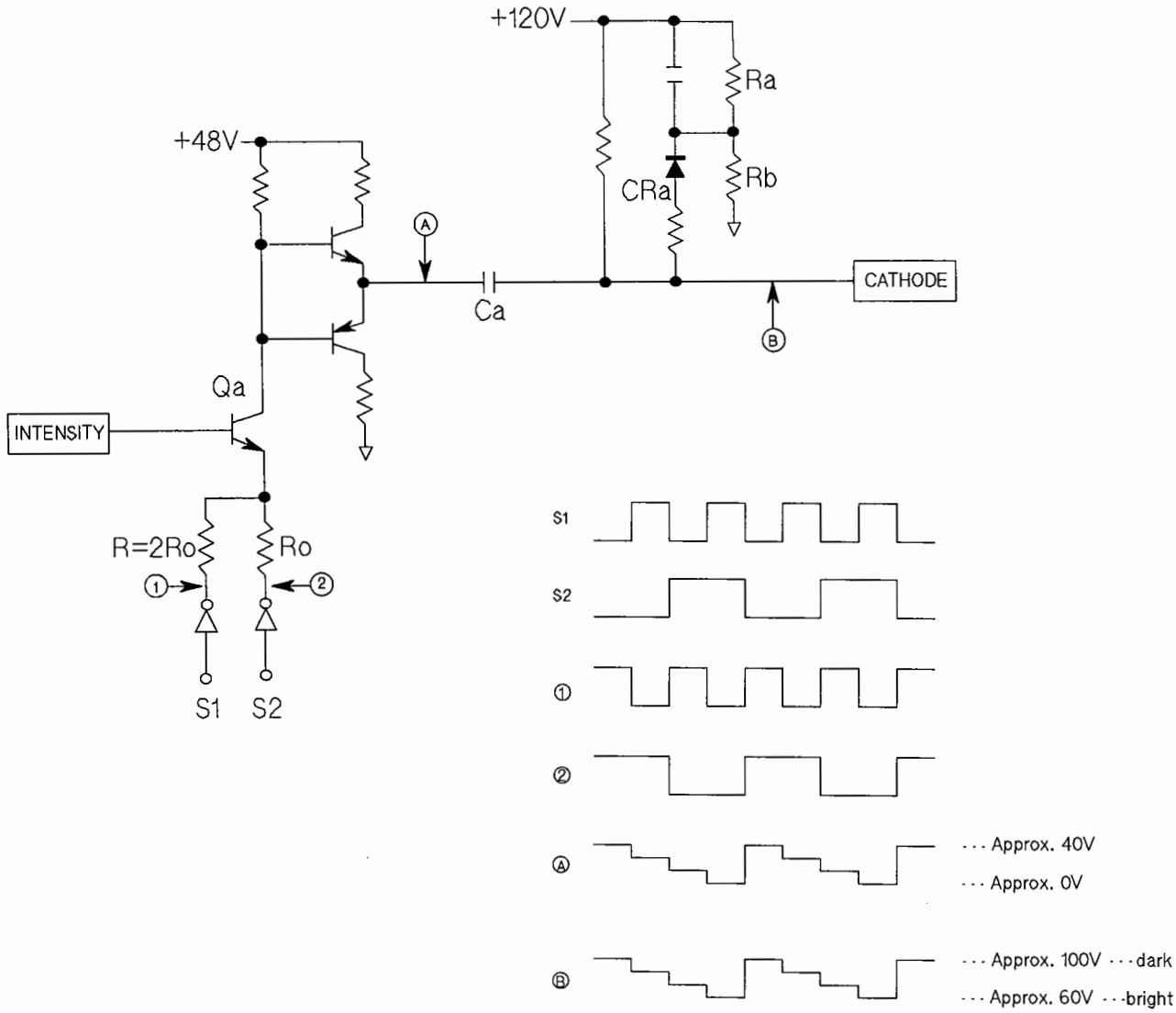

Figure 2. Video Amplifier Circuit Operation

In Figure 2, the voltage at point **A** is decoupled by capacitor **Ca**. The upper voltage limit at point **B** is clamped to approximately 100 V by **CRa**, **Ra** and **Rb**. The upper voltage limit for the Red video signal is not adjustable (it is fixed at about 97 V), but the upper limits for the Green and Blue signals are adjustable (97 V ±20 V), using the CUTOFF control trim resistors (Green: A5R11, Blue: A5R4).

Intensity Circuit: (A5Q11, A5Q12, A5Q13, A5R34)

The intensity is adjusted by changing the base voltage of A5Q7 (Blue), A5Q8 (Green), and A5Q9 (Red). The base voltage is changed by adjusting the INTENSITY trim pot (A5R34) to change **INTENSITY** voltage, and with the ABL signal. When the A4 board ABL circuit is active (A5Q13 is **ON**), the current through A5Q12 decreases causing the **INTENSITY** voltage to decrease.

Degausser Circuit:

The degaussing circuit demagnetizes the CRT frame and the aperture grille. The Voltage at the anode of CR11 is applied instantly, and then starts decreasing at a rate determined by the RC time constant of A5R44 and A5C16 (the RC time constant of R44 and C16 allows A5C12 to charge up to approx. 100 V before the SCR is triggered **ON**). When the voltage difference between the anode and cathode of A5CR11 becomes greater than its zener breakdown voltage (6.2 V), it conducts creating a negative going pulse at the gate of SCR A5Q14, turning it **ON**. When SCR A5Q14 conducts darlington transistor Q10 turns **ON** suddenly, discharging A5C12, which with A5L5 and the degaussing coil form a resonate circuit. The discharge of A5C12 results in a damped oscillation current flow through the degaussing coil, degaussing the CRT frame and aperture grille.

When SCR A5Q14 turns **ON** its anode to cathode current is supplied by discharging A5C13, and when the current through Q14 drops below Q14's minimum holding current level, A5Q14 turns **OFF**, cutting **OFF** the ringdown oscillation current through the degaussing coil.

TROUBLESHOOTING GUIDE:

1. Service Function:

Service functions No. 86 and No. 87 can be used to troubleshoot the A5 board. Service function No. 86 is the Display White Balance Adjustment, and No. 87 is the Display Video Amplifier Check. The details of the service functions are covered in Appendix B of this manual.

2. A5TP2, A4TP7 - GND waveform:

When service function No. 87 is run and the oscilloscope is set and connected as follows, the following waveforms should be displayed.

Settings:

CHAN 1:	40 V/div
CHAN 2:	1 V/div
Time:	10 µs/div
Trigger:	CH 2
Probe Tip (CH 1):	A5TP2
Probe Tip (CH 2):	A4TP7

Waveform:

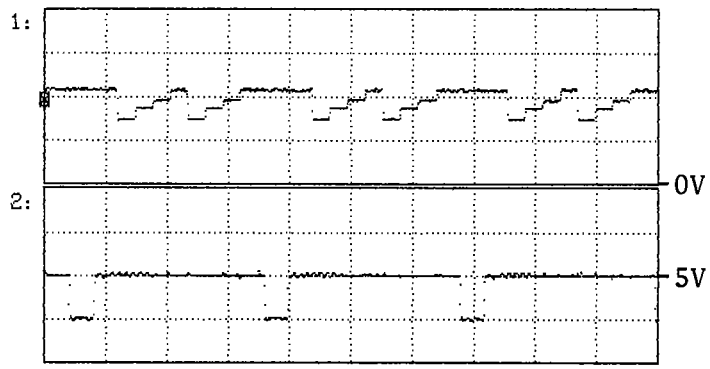

3. A5TP3, A4TP7 - GND waveform:

When service function No. 87 is run and the oscilloscope is set and connected as follows, the following waveforms should be displayed.

Settings:

CHAN 1:	40 V/div
CHAN 2:	1 V/div
Time:	10 µs/div
Trigger:	CH 2
Probe Tip (CH 1):	A5TP3
Probe Tip (CH 2):	A4TP7

Waveform:

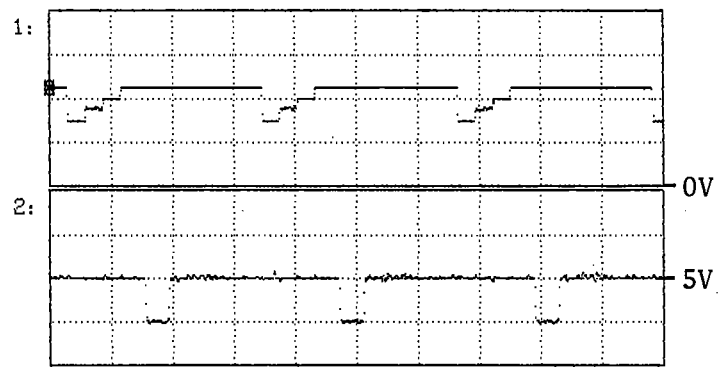

4. A5TP4, A4TP7 - GND waveform:

When service function No. 87 is run and the oscilloscope is set and connected as follows, the following waveforms should be displayed.

Settings:

CHAN 1:	40 V/div
CHAN 2:	1 V/div
Time:	10 µs/div
Trigger:	CH 2
Probe Tip (CH 1):	A5TP4
Probe Tip (CH 2):	A4TP7

Waveform:

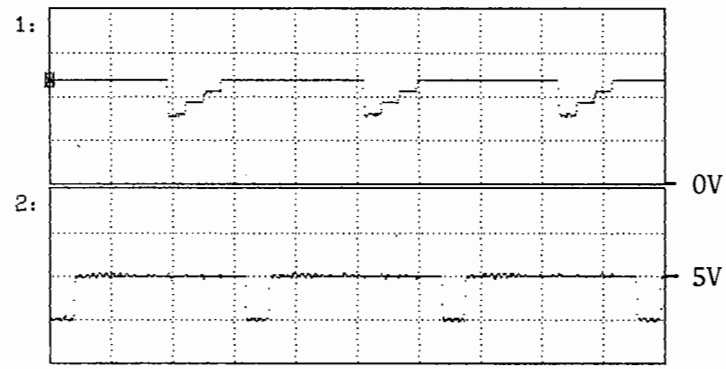

5. A5TP5, A4TP7 - GND waveform:

When service function No. 86 is run and the oscilloscope is set and connected as follows, the following waveforms should be displayed.

Settings:

CHAN 1:	2 V/div
CHAN 2:	1 V/div
Time:	10 µs/div
Trigger:	CH 2
Probe Tip (CH 1):	A5TP5
Probe Tip (CH 2):	A4TP7

Waveform:

Table 1. A5 Replaceable Parts (1 of 2)

Reference Designator	HP Part Number	C D	Qty.	Description	Mfr Code	Mfr Part Number
A5				VIDEO AMPLIFIER		
A5	04194-66505	5	1	VIDEO AMP BD ASY	28480	04194-66505
A5C1	0180-3465	9	4	CAPACITOR-FXD 4.7UF+-20% 100VDC AL	28480	0180-3465
A5C2	0180-3465	9		CAPACITOR-FXD 4.7UF+-20% 100VDC AL	28480	0180-3465
A5C3	0180-3465	9		CAPACITOR-FXD 4.7UF+-20% 100VDC AL	28480	0180-3465
A5C4	0160-4299	7	1	CAPACITOR-FXD 2200PF +-20% 250VDC CER	56289	C067F251F222MS22-CDH
A5C5	0170-0040	9	3	CAPACITOR-FXD .047UF +-10% 200VDC POLYE	56289	292P47392
A5C6	0170-0040	9		CAPACITOR-FXD .047UF +-10% 200VDC POLYE	56289	292P47392
A5C7	0170-0040	9		CAPACITOR-FXD .047UF +-10% 200VDC POLYE	56289	292P47392
A5C8	0180-3465	9		CAPACITOR-FXD 4.7UF+-20% 100VDC AL	28480	0180-3465
A5C9	0160-3622	8	1	CAPACITOR-FXD .1UF +80-20% 100VDC CER	26654	2130Y5V100R104Z
A5C10	0180-1085	5	1	CAPACITOR-FXD 4.7UF 16VDC TA	28480	0180-1085
A5C11	0160-4832	4	2	CAPACITOR-FXD .01UF +-10% 100VDC CER	28480	0160-4832
A5C12	0160-6360	7	1	CAPACITOR 2.2U .250V	28480	0160-6360
A5C13	0180-2984	5	1	CAPACITOR-FXD 47UF+-20% 50VDC AL	28480	0180-2984
A5C14	0160-4832	4		CAPACITOR-FXD .01UF +-10% 100VDC CER	28480	0160-4832
A5C15	0160-0127	2	1	CAPACITOR-FXD 1UF +-20% 50VDC CER	28480	0160-0127
A5C16	0180-2697	7	1	CAPACITOR-FXD 10UF+-10% 25VDC TA	28480	0180-2697
A5CR1	1901-1170	0	9	DIO 1SS83 300V	28480	1901-1170
A5CR2	1901-1170	0		DIO 1SS83 300V	28480	1901-1170
A5CR3	1901-1170	0		DIO 1SS83 300V	28480	1901-1170
A5CR4	1901-1170	0		DIO 1SS83 300V	28480	1901-1170
A5CR5	1901-1170	0		DIO 1SS83 300V	28480	1901-1170
A5CR6	1901-1170	0		DIO 1SS83 300V	28480	1901-1170
A5CR7	1901-1170	0		DIO 1SS83 300V	28480	1901-1170
A5CR8	1901-1170	0		DIO 1SS83 300V	28480	1901-1170
A5CR9	1901-1170	0		DIO 1SS83 300V	28480	1901-1170
A5CR10	1901-0050	3	1	DIODE-SWITCHING 80V 200MA 2NS DO-35	9N171	1N4150
A5CR11	1902-0953	7	2	DIODE-ZNR 6.2V 5% DO-35 PD=.4W TC=+.053%	28480	1902-0953
A5CR12	1902-0953	7		DIODE-ZNR 6.2V 5% DO-35 PD=.4W TC=+.053%	28480	1902-0953
A5J1	1251-6527	2	1	CONNECTOR 6-PIN M METRIC POST TYPE	28480	1251-6527
A5J2	0362-0390	9	1	CABLE TRANSITION 26-TERM INSUL DSPL TYPE	28480	0362-0390
A5J3	1251-4938	5	1	CONNECTOR 3-PIN M METRIC POST TYPE	28480	1251-4938
A5J4	1251-5862	6	1	CONNECTOR 4-PIN M METRIC POST TYPE	28480	1251-5862
A5L1	9140-0114	4	4	INDUCTOR RF-CH-MLD 10UH 10%	28480	9140-0114
A5L2	9140-0114	4		INDUCTOR RF-CH-MLD 10UH 10%	28480	9140-0114
A5L3	9140-0114	4		INDUCTOR RF-CH-MLD 10UH 10%	28480	9140-0114
A5L4	9140-0114	4		INDUCTOR RF-CH-MLD 10UH 10%	28480	9140-0114
A5L5	9140-0672	9	1	INDUCTOR 2.2MH 20%	28480	9140-0672
A5Q1	1853-0591	4	3	TRANSISTOR PNP SI PD=1W FT=.05HZ	28480	1853-0591
A5Q2	1854-1076	4	6	TRANSISTOR NPN SI PD=1W FT=.05HZ	28480	1854-1076
A5Q3	1853-0591	4		TRANSISTOR PNP SI PD=1W FT=.05HZ	28480	1853-0591
A5Q4	1854-1076	4		TRANSISTOR NPN SI PD=1W FT=.05HZ	28480	1854-1076
A5Q5	1853-0591	4		TRANSISTOR PNP SI PD=1W FT=.05HZ	28480	1853-0591
A5Q6	1854-1076	4		TRANSISTOR NPN SI PD=1W FT=.05HZ	28480	1854-1076
A5Q7	1854-1076	4		TRANSISTOR NPN SI PD=1W FT=.05HZ	28480	1854-1076
A5Q8	1854-1076	4		TRANSISTOR NPN SI PD=1W FT=.05HZ	28480	1854-1076
A5Q9	1854-1076	4		TRANSISTOR NPN SI PD=1W FT=.05HZ	28480	1854-1076
A5Q10	1854-1080	0	1	TRANSISTOR NPN SI DARL TO-220AB PD=40W	28480	1854-1080
A5Q11	1854-0810	2	3	TRANSISTOR NPN SI PD=625MW FT=200MHZ	28480	1854-0810
A5Q12	1854-0810	2		TRANSISTOR NPN SI PD=625MW FT=200MHZ	28480	1854-0810
A5Q13	1854-0810	2		TRANSISTOR NPN SI PD=625MW FT=200MHZ	28480	1854-0810
A5Q14	1855-0612	4	1	TRANSISTOR-UJT TO-92	28480	1855-0612

*** Indicates factory selected value.**

Table 1. A5 Replaceable Parts (2 of 2)

Reference Designator	HP Part Number	C D	Qty.	Description	Mfr Code	Mfr Part Number
A5R1	0698-3452	1	3	RESISTOR 147K 1% .125W F TC=0+-100	24546	CT4-1/8-T0-1473-F
A5R2	0698-3452	1		RESISTOR 147K 1% .125W F TC=0+-100	24546	CT4-1/8-T0-1473-F
A5R3	0698-3452	1		RESISTOR 147K 1% .125W F TC=0+-100	24546	CT4-1/8-T0-1473-F
A5R4	2100-3353	8	2	RESISTOR-TRMR 20K 10% C SIDE-ADJ 1-TRN	28480	2100-3353
A5R5	0757-1094	9	3	RESISTOR 1.47K 1% .125W F TC=0+-100	24546	CT4-1/8-T0-1471-F
A5R6	0757-1094	9		RESISTOR 1.47K 1% .125W F TC=0+-100	24546	CT4-1/8-T0-1471-F
A5R7	0757-0444	1	1	RESISTOR 12.1K 1% .125W F TC=0+-100	24546	CT4-1/8-T0-1212-F
A5R8	0698-3419	0	2	RESISTOR 31.6K 1% .5W F TC=0+-100	28480	0698-3419
A5R9	0698-3419	0		RESISTOR 31.6K 1% .5W F TC=0+-100	28480	0698-3419
A5R10	0698-3423	6	1	RESISTOR 46.4K 1% .5W F TC=0+-100	28480	0698-3423
A5R11	2100-3353	8		RESISTOR-TRMR 20K 10% C SIDE-ADJ 1-TRN	28480	2100-3353
A5R12	0698-3446	3	3	RESISTOR 383 1% .125W F TC=0+-100	24546	CT4-1/8-T0-383R-F
A5R13	0698-3446	3		RESISTOR 383 1% .125W F TC=0+-100	24546	CT4-1/8-T0-383R-F
A5R14	0698-3446	3		RESISTOR 383 1% .125W F TC=0+-100	24546	CT4-1/8-T0-383R-F
A5R15	0699-1705	5	6	RESISTOR 68 5% .25W F TC=0+-350	28480	0699-1705
A5R16	0699-1705	5		RESISTOR 68 5% .25W F TC=0+-350	28480	0699-1705
A5R17	0699-1705	5		RESISTOR 68 5% .25W F TC=0+-350	28480	0699-1705
A5R18	0699-1705	5		RESISTOR 68 5% .25W F TC=0+-350	28480	0699-1705
A5R19	0699-1705	5		RESISTOR 68 5% .25W F TC=0+-350	28480	0699-1705
A5R20	0699-1705	5		RESISTOR 68 5% .25W F TC=0+-350	28480	0699-1705
A5R21	0698-3132	4	3	RESISTOR 261 1% .125W F TC=0+-100	24546	CT4-1/8-T0-2610-F
A5R22	0698-3440	7	2	RESISTOR 196 1% .125W F TC=0+-100	24546	CT4-1/8-T0-196R-F
A5R23	0698-3132	4		RESISTOR 261 1% .125W F TC=0+-100	24546	CT4-1/8-T0-2610-F
A5R24	0698-3159	5	3	RESISTOR 26.1K 1% .125W F TC=0+-100	24546	CT4-1/8-T0-2612-F
A5R25	0698-3440	7		RESISTOR 196 1% .125W F TC=0+-100	24546	CT4-1/8-T0-196R-F
A5R26	0698-3132	4		RESISTOR 261 1% .125W F TC=0+-100	24546	CT4-1/8-T0-2610-F
A5R27	0698-3159	5		RESISTOR 26.1K 1% .125W F TC=0+-100	24546	CT4-1/8-T0-2612-F
A5R28	0698-3159	5		RESISTOR 26.1K 1% .125W F TC=0+-100	24546	CT4-1/8-T0-2612-F
A5R29	0698-0082	7	1	RESISTOR 464 1% .125W F TC=0+-100	24546	CT4-1/8-T0-4640-F
A5R30	2100-3350	5	2	RESISTOR-TRMR 200 10% C SIDE-ADJ 1-TRN	28480	2100-3350
A5R31	2100-3351	6	2	RESISTOR-TRMR 500 10% C SIDE-ADJ 1-TRN	28480	2100-3351
A5R32	2100-3350	5		RESISTOR-TRMR 200 10% C SIDE-ADJ 1-TRN	28480	2100-3350
A5R33	2100-3351	6		RESISTOR-TRMR 500 10% C SIDE-ADJ 1-TRN	28480	2100-3351
A5R34	2100-3207	1	1	RESISTOR-TRMR 5K 10% C SIDE-ADJ 1-TRN	28480	2100-3207
A5R35	0764-0042	0	3	RESISTOR 2.2K 5% 2W MO TC=0+-200	28480	0764-0042
A5R36	0764-0042	0		RESISTOR 2.2K 5% 2W MO TC=0+-200	28480	0764-0042
A5R37	0764-0042	0		RESISTOR 2.2K 5% 2W MO TC=0+-200	28480	0764-0042
A5R38	0757-0442	9	1	RESISTOR 10K 1% .125W F TC=0+-100	24546	CT4-1/8-T0-1002-F
A5R39	0698-0085	0	1	RESISTOR 2.61K 1% .125W F TC=0+-100	24546	CT4-1/8-T0-2611-F
A5R40	0757-0461	2	1	RESISTOR 68.1K 1% .125W F TC=0+-100	24546	CT4-1/8-T0-6812-F
A5R41	0757-0401	0	1	RESISTOR 100 1% .125W F TC=0+-100	24546	CT4-1/8-T0-101-F
A5R42	0698-3156	2	1	RESISTOR 14.7K 1% .125W F TC=0+-100	24546	CT4-1/8-T0-1472-F
A5R43	0698-3444	1	1	RESISTOR 316 1% .125W F TC=0+-100	24546	CT4-1/8-T0-316R-F
A5R44	0757-0465	6	1	RESISTOR 100K 1% .125W F TC=0+-100	24546	CT4-1/8-T0-1003-F
A5R45	0757-1094	9		RESISTOR 1.47K 1% .125W F TC=0+-100	24546	CT4-1/8-T0-1471-F
A5R46	0698-3162	0	1	RESISTOR 46.4K 1% .125W F TC=0+-100	24546	CT4-1/8-T0-4642-F
A5R47	0757-0280	3	1	RESISTOR 1K 1% .125W F TC=0+-100	24546	CT4-1/8-T0-1001-F
A5U1	1820-0684	7	1	IC INV TTL S HEX 1-INP	01295	SN74S05N

*** Indicates factory selected value.**

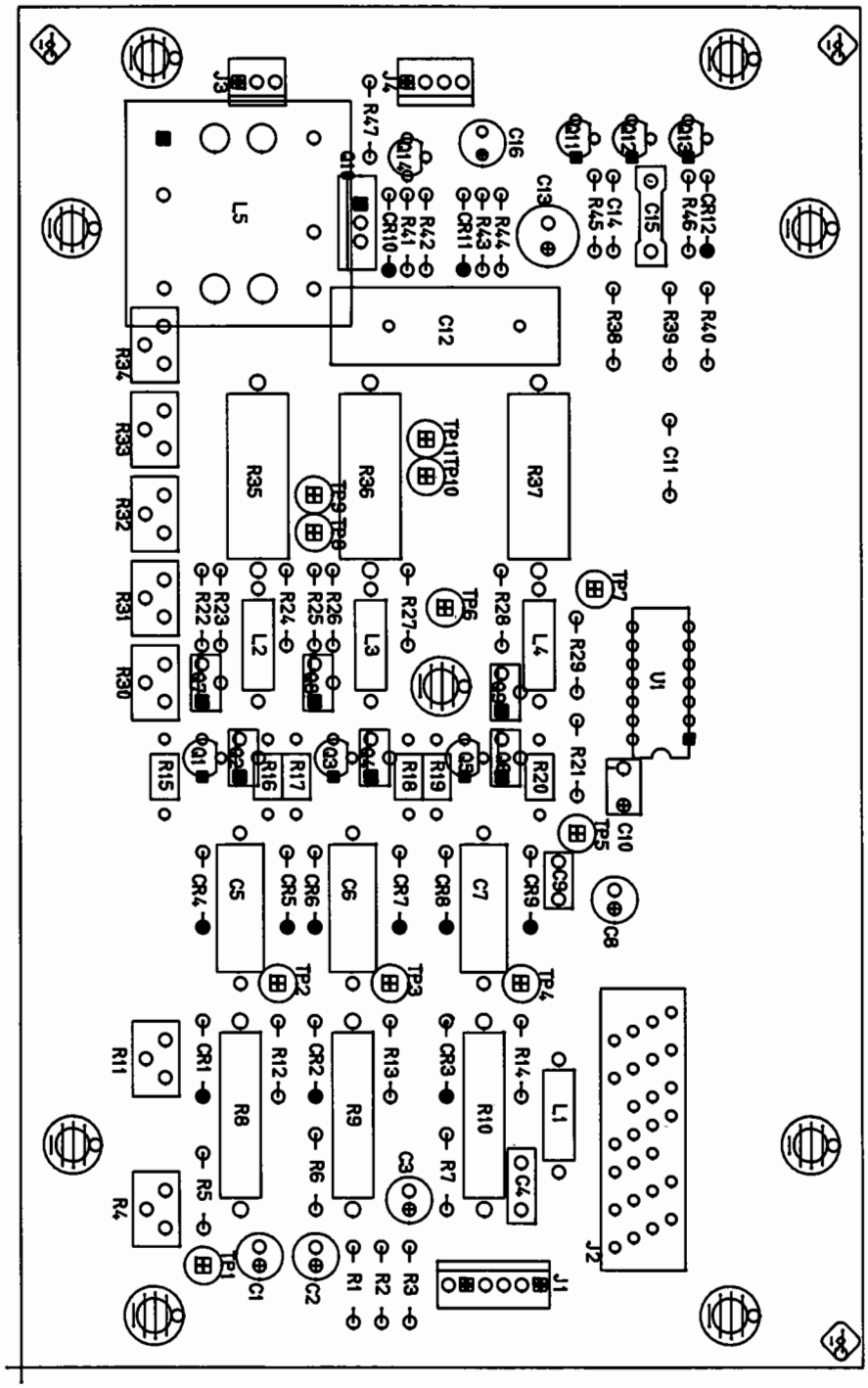

A5 Video Amplifier Component Locations

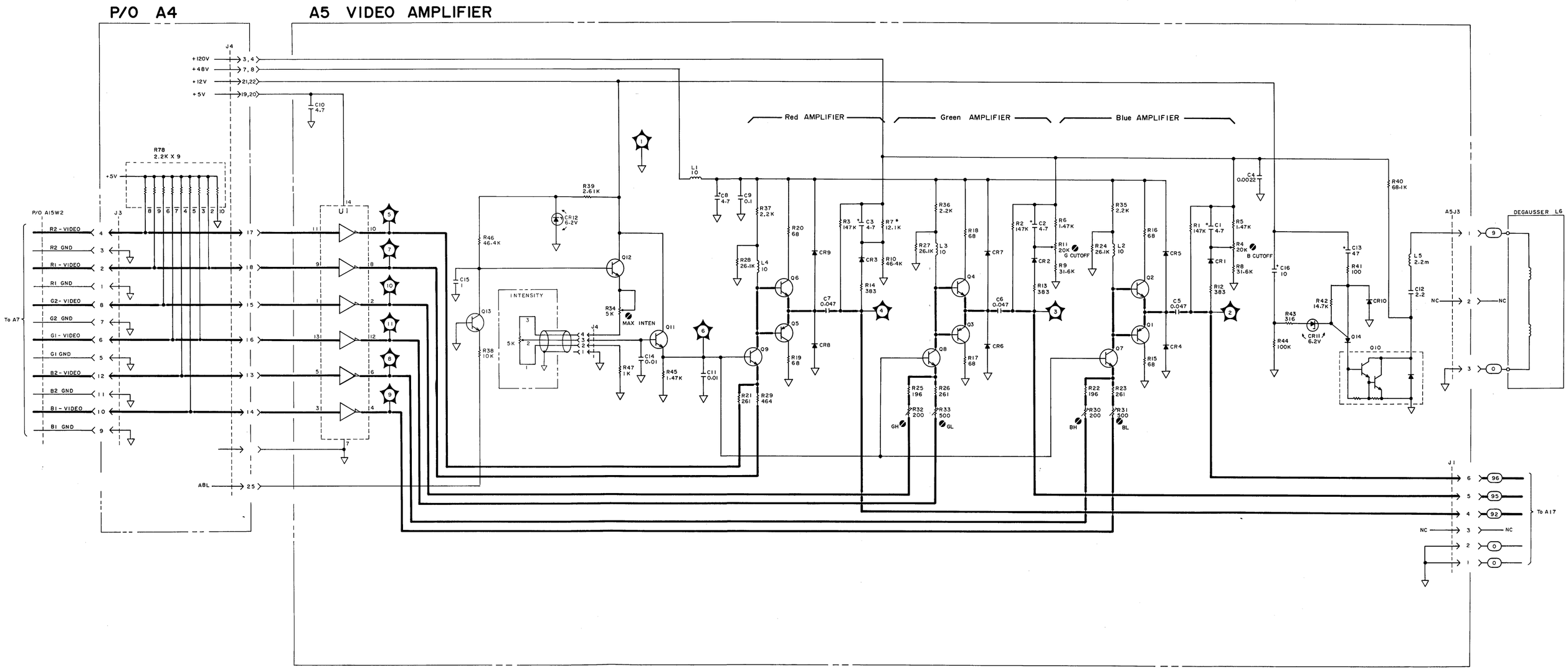
P/O A4
A5 VIDEO AMPLIFIER
Red AMPLIFIER
Green AMPLIFIER
Blue AMPLIFIER
+120V
+48V
+12V
+5V
J4
J3
P/O A15W2
R2 - VIDEO
R2 GND
R1 - VIDEO
R1 GND
G2 - VIDEO
G2 GND
G1 - VIDEO
G1 GND
B2 - VIDEO
B2 GND
B1 - VIDEO
B1 GND
To A7
ABL
R78
2.2K X 9
U1
INTENSITY
MAX INTEN
G CUTOFF
B CUTOFF
GH
GL
BH
BL
A5J3
DEGAUSSER L6
J1
To A17
NC

NOTES:

1. REFERENCE DESIGNATORS WITHIN THIS ASSEMBLY ARE ABBREVIATED. PREFIX ABBREVIATION WITH ASSEMBLY NUMBER FOR COMPLETE REFERENCE DESIGNATOR.

2. UNLESS OTHERWISE INDICATED:

   RESISTANCE IN OHMS (Ω)
   CAPACITANCE IN MICROFARADS (μF)
   INDUCTANCE IN MICROHENRIES (μH)

3. ADJUSTMENT NAMES

A5R4	B CUTOFF
A5R11	G CUTOFF
A5R30	BH
A5R31	BL
A5R32	GH
A5R33	GL
A5R34	INT LIM
INTENSITY	

SIGNAL PROCESSOR SERVICE SHEET

The A6 board contains a CPU, ROM, and battery backed-up RAM. CPU A (A6U34) is used to calculate parameters and to read the the front panel keys. The User Defined Function, Sweep End Function, User Math, plot area size (PSCALE), HP-IB address, and the calibration standards calibration data are stored in the battery backed-up RAM.

CPU A uses a 10 MHz clock which is derived by dividing the 20 MHz signal from the A10 board in the analog section. CPU A interfaces to memory through address buffers.

TROUBLESHOOTING GUIDE:

The ROM-less board was set up to prevent the revision of the firmware installed on the A6 board from mis-matching the revision of the firmware installed on the A8 board. There are two types of ROM-less boards; a re-built board and a newly manufactured board. The re-built ROM-less board has been set up under the exchange program. Refer to the replaceable parts list for the part numbers for these boards.

If the A6 board is defective for any reason other than the ROMs, order a ROM-less A6 board. Then install the ROMs from the defective A6 board on the replacement A6 board.

NOTE

PN 04195-66506 is not the reorder number but the manufacturing number. Do not order the A6 board using the manufacturing number.

1. Power on Self Test:

The HP 4195A performs the power-on self test every time it is turned ON. If during the power on self test the following message is displayed on the HP 4195A's display, replace the ROM indicated in the defective ROM message. The relationship between the defective ROM number and the reference designator (ROM position) for that ROM is shown in Figure 1.

"A: ROM check sum error ID=XXX" (XXX: defective ROM number)

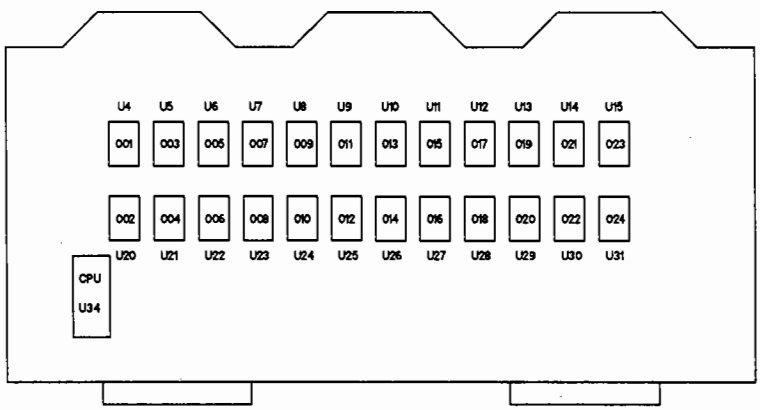

U15, U31 : not installed

Figure 1. Defective ROM number and Reference Designator

The A6 and A8 boards use LED indicator arrays to indicate results of the self tests. Figure 2 shows the some example LED indicator patterns and gives their meanings.

A6					A8						
DS1	**DS2**	**DS3**	**DS4**	**DS5**	**DS1**	**DS2**	**DS3**	**DS4**	**DS5**	**DS6**	**Result**
ON	-	-	-	-	-	-	-	-	-	-	see A
-	ON	-	-	-	ON	-	-	-	-	-	see B
-	-	ON	-	-	-	ON	-	-	-	-	see C
-	-	-	ON	-	-	-	ON	-	-	-	see D
-	-	-	ON	-	-	-	-	-	ON	-	see E
-	-	-	-	ON	-	-	-	-	ON	-	see F
-	-	-	-	ON	-	-	-	-	-	ON	passed

A: A6 ROM check sum error was detected.
B: A8 ROM check sum error or A6 DRAM read/write error was detected.
C: A8 DRAM addressing test error or A8 DRAM clear test error was detected.
D: A8 SRAM test error was detected.
E: Stopped by A6 software error.
F: Stopped by A8 software error.

Figure 2. LED Indicator and Meanings

If the HP 4195A stops during the power on self test, and self test result E in Figure 2 is indicated, replace A6U4 and A6U20.

2. A6DS9:

When DS9 is ON, CPU A stopped due to a BUS ERROR. Reset the instrument by cycling the power switch.

3. A6SW1, A6SW2, A6SW3, A6SW4:

The normal settings for A6SW1, A6SW2, A6SW3, and A6SW4 are shown below.

A6SW1:

A6SW1-1	OFF
A6SW1-2	OFF
A6SW1-3	OFF
A6SW1-4	OFF
A6SW1-5	OFF
A6SW1-6	OFF
A6SW1-7	OFF
A6SW1-8	OFF

A6SW2:

A6SW2-1	OFF
A6SW2-2	OFF
A6SW2-3	OFF
A6SW2-4	OFF

A6SW3:

A6SW3-1	OFF
A6SW3-2	ON
A6SW3-3	OFF
A6SW3-4	ON
A6SW3-5	OFF
A6SW3-6	ON
A6SW3-7	OFF
A6SW3-8	ON

A6SW4:

A6SW4-1	OFF
A6SW4-2	ON
A6SW4-3	OFF
A6SW4-4	ON
A6SW4-5	OFF
A6SW4-6	ON
A6SW4-7	OFF
A6SW4-8	ON

4. A6W1, A6W2, A6W3, A6W4:

A6W1 and A6W2 are normally set to position 2, and A6W3 and A6W4 to position 1.

Changing A6W3 and A6W4 to position 2 enables the local clock generator which supplies the clock used for testing the digital boards when the 20 MHz clock from the A10 board is missing.

Table 1. A6 Replaceable Parts (1 of 4)

Reference Designator	HP Part Number	C D	Qty.	Description	Mfr Code	Mfr Part Number
A6				SIGNAL PROCESSOR		
A6	04194-66606		1	DATA PROC BD AY W/O ROM	28480	04194-66506
	04194-69606		1	DATA PROC BD AY W/O ROM (RE-BUILT)	28480	04194-69606
A6BT1	1420-0306	2	1	BATTERY- 2.4V	28480	1420-0306
A6C1 - A6C40	0160-4832	4	46	CAPACITOR-FXD .01UF +-10% 100VDC CER	28480	0160-4832
A6C41	0180-0229	7	1	CAPACITOR-FXD 33UF+-10% 10VDC TA	56289	150D336X9010B2
A6C42	0160-4835	7	2	CAPACITOR-FXD .1UF +-10% 50VDC CER	28480	0160-4835
A6C43	0160-4835	7		CAPACITOR-FXD .1UF +-10% 50VDC CER	28480	0160-4835
A6C44	0180-3217	9	3	CAPACITOR-FXD 470UF+-20% 6.3VDC AL	28480	0180-3217
A6C45	0180-0376	5	2	CAPACITOR-FXD .47UF+-10% 35VDC TA	56289	150D474X9035A2
A6C46	0180-0376	5		CAPACITOR-FXD .47UF+-10% 35VDC TA	56289	150D474X9035A2
A6C47	0180-3469	3	1	CAPACITOR-FXD 100UF+-20% 25VDC AL	28480	0180-3469
A6C48	0160-4832	4		CAPACITOR-FXD .01UF +-10% 100VDC CER	28480	0160-4832
A6C49	0160-4832	4		CAPACITOR-FXD .01UF +-10% 100VDC CER	28480	0160-4832
A6C50	0160-4832	4		CAPACITOR-FXD .01UF +-10% 100VDC CER	28480	0160-4832
A6C51	0160-4832	4		CAPACITOR-FXD .01UF +-10% 100VDC CER	28480	0160-4832
A6C52	0160-4832	4		CAPACITOR-FXD .01UF +-10% 100VDC CER	28480	0160-4832
A6C53	0160-4832	4		CAPACITOR-FXD .01UF +-10% 100VDC CER	28480	0160-4832
A6C54	0180-0291	3	1	CAPACITOR-FXD 1UF+-10% 35VDC TA	56289	150D105X9035A2
A6C55	0180-3217	9		CAPACITOR-FXD 470UF+-20% 6.3VDC AL	28480	0180-3217
A6C56	0180-3217	9		CAPACITOR-FXD 470UF+-20% 6.3VDC AL	28480	0180-3217
A6CR1	1901-0518	8	3	DIODE-SM SIG SCHOTTKY	28480	1901-0518
A6CR2	1902-0951	5	10	DIODE-ZNR 5.1V 5% DO-35 PD=.4W TC=+.035%	28480	1902-0951
A6CR3	1902-0951	5		DIODE-ZNR 5.1V 5% DO-35 PD=.4W TC=+.035%	28480	1902-0951
A6CR4	1901-0518	8		DIODE-SM SIG SCHOTTKY	28480	1901-0518
A6CR5	1901-0518	8		DIODE-SM SIG SCHOTTKY	28480	1901-0518
A6CR6 - A6CR13	1902-0951	5		DIODE-ZNR 5.1V 5% DO-35 PD=.4W TC=+.035%	28480	1902-0951
A6DS1 - A6DS9	1990-0665	3	9	LED-LAMP LUM-INT=1MCD IF=30MA-MAX BVR=5V	28480	1990-0665
A6F1	2110-0712	8	1	FUSE-SUBMINIATURE 4A 125V NTD .28X.0955	28480	2110-0712
A6J1 - A6J4	1251-4822	6	4	CONN-POST TYPE .100-PIN-SPCG 3-CONT	28480	1251-4822
A6L1	9170-0847	3	1	CORE-SHIELDING BEAD	02114	56-590-65
A6Q1	1853-0281	9	2	TRANSISTOR PNP 2N2907A SI TO-18 PD=400MW	04713	2N2907A
A6Q2				NOT ASSIGNED		
A6Q3	1853-0281	9		TRANSISTOR PNP 2N2907A SI TO-18 PD=400MW	04713	2N2907A
A6Q4	1854-0810	2	1	TRANSISTOR NPN SI PD=625MW FT=200MHZ	28480	1854-0810
A6R1	1810-0279	5	10	NETWORK-RES 10-SIP 4.7K OHM X 9	91637	CSC10A01-472G
A6R2	1810-0279	5		NETWORK-RES 10-SIP 4.7K OHM X 9	91637	CSC10A01-472G
A6R3	1810-0273	9	1	NETWORK-RES 10-SIP 470.0 OHM X 9	91637	CSC10A01-471G
A6R4	1810-0279	5		NETWORK-RES 10-SIP 4.7K OHM X 9	91637	CSC10A01-472G
A6R5	1810-0279	5		NETWORK-RES 10-SIP 4.7K OHM X 9	91637	CSC10A01-472G
A6R6	1810-0279	5		NETWORK-RES 10-SIP 4.7K OHM X 9	91637	CSC10A01-472G
A6R7	0698-3155	1	5	RESISTOR 4.64K 1% .125W F TC=0+-100	24546	CT4-1/8-T0-4641-F
A6R8	0757-0280	3	4	RESISTOR 1K 1% .125W F TC=0+-100	24546	CT4-1/8-T0-1001-F
A6R9	0698-3155	1		RESISTOR 4.64K 1% .125W F TC=0+-100	24546	CT4-1/8-T0-4641-F
A6R10	0698-3155	1		RESISTOR 4.64K 1% .125W F TC=0+-100	24546	CT4-1/8-T0-4641-F

*** Indicates factory selected value.**

Table 1. A6 Replaceable Parts (2 of 4)

Reference Designator	HP Part Number	C D	Qty.	Description	Mfr Code	Mfr Part Number
A6R11	1810-0279	5		NETWORK-RES 10-SIP 4.7K OHM X 9	91637	CSC10A01-472G
A6R12	1810-0279	5		NETWORK-RES 10-SIP 4.7K OHM X 9	91637	CSC10A01-472G
A6R13	1810-0279	5		NETWORK-RES 10-SIP 4.7K OHM X 9	91637	CSC10A01-472G
A6R14				NOT ASSIGNED		
A6R15	0757-0280	1		RESISTOR 1K 1% .125W F TC=0+-100	24546	CT4-1/8-T0-1001-F
A6R16	0757-0442	9	5	RESISTOR 10K 1% .125W F TC=0+-100	24546	CT4-1/8-T0-1002-F
A6R17				NOT ASSIGNED		
A6R18	0698-3155	1		RESISTOR 4.64K 1% .125W F TC=0+-100	24546	CT4-1/8-T0-4641-F
A6R19	0757-0346	2	1	RESISTOR 10 1% .125W F TC=0+-100	28480	0757-0346
A6R20	0698-3441	8	3	RESISTOR 215 1% .125W F TC=0+-100	24546	CT4-1/8-T0-215R-F
A6R21	0757-0442	9		RESISTOR 10K 1% .125W F TC=0+-100	24546	CT4-1/8-T0-1002-F
A6R22	0698-3441	8		RESISTOR 215 1% .125W F TC=0+-100	24546	CT4-1/8-T0-215R-F
A6R23	0757-0442	9		RESISTOR 10K 1% .125W F TC=0+-100	24546	CT4-1/8-T0-1002-F
A6R24	0757-0442	9		RESISTOR 10K 1% .125W F TC=0+-100	24546	CT4-1/8-T0-1002-F
A6R25	0698-3162	0	1	RESISTOR 46.4K 1% .125W F TC=0+-100	24546	CT4-1/8-T0-4642-F
A6R26	0757-0280	3		RESISTOR 1K 1% .125W F TC=0+-100	24546	CT4-1/8-T0-1001-F
A6R27	0757-0442	9		RESISTOR 10K 1% .125W F TC=0+-100	24546	CT4-1/8-T0-1002-F
A6R28	0757-0280	3		RESISTOR 1K 1% .125W F TC=0+-100	24546	CT4-1/8-T0-1001-F
A6R29	1810-0279	5		NETWORK-RES 10-SIP 4.7K OHM X 9	91637	CSC10A01-472G
A6R30	1810-0269	3	3	NETWORK-RES 9-SIP 10.0K OHM X 8	28480	1810-0269
A6R31	1810-0269	3		NETWORK-RES 9-SIP 10.0K OHM X 8	28480	1810-0269
A6R32	1810-0279	5		NETWORK-RES 10-SIP 4.7K OHM X 9	91637	CSC10A01-472G
A6R33	0698-3441	8		RESISTOR 215 1% .125W F TC=0+-100	24546	CT4-1/8-T0-215R-F
A6R34	0698-3430	5	1	RESISTOR 21.5 1% .125W F TC=0+-100	03888	PME55-1/8-T0-21R5-F
A6R35	1810-0325	2	1	NETWORK-RES 16-DIP 150.0 OHM X 8	11236	761-3-R150
A6R36	1810-0269	3		NETWORK-RES 9-SIP 10.0K OHM X 8	28480	1810-0269
A6R37	1810-0338	7	1	NETWORK-RES 16-DIP 100.0 OHM X 8	11236	761-3-R100
A6SW1	3101-2831	8	3	SWITCH 8P	28480	3101-2831
A6SW2	3101-2832	9	1	SWITCH 4P	28480	3101-2832
A6SW3	3101-2831	8		SWITCH 8P	28480	3101-2831
A6SW4	3101-2831	8		SWITCH 8P	28480	3101-2831
A6U1	1820-2757	9	1	IC FF TTL ALS D-TYPE POS-EDGE-TRIG OCTL	01295	SN74ALS574AN
A6U2	1820-2711	5	3	IC DRVR TTL LS LINE DRVR OCTL	01295	SN74LS541N
A6U3	1820-2711	5		IC DRVR TTL LS LINE DRVR OCTL	01295	SN74LS541N
A6U4 - A6U15				PROGRAMMED ROM (Refer to the end of this table)		
A6U16	1820-3100	8	4	IC DCDR TTL ALS BIN 3-TO-8-LINE 3-INP	01295	SN74ALS138N
A6U17	1820-3100	8		IC DCDR TTL ALS BIN 3-TO-8-LINE 3-INP	01295	SN74ALS138N
A6U18	1820-2634	1	2	IC INV TTL ALS HEX	01295	SN74ALS04BN
A6U19	1820-2488	3	2	IC FF TTL ALS D-TYPE POS-EDGE-TRIG	01295	SN74ALS74AN
A6U20 - A6U31				PROGRAMMED ROM (Refer to the end of this table)		
A6U32	1820-4570	8	1	IC-16-BIT,10MHZ,PLAST MPU,32 B DATA BUS	11710	TF68000P10
A6U33	1820-2656	7	4	IC GATE TTL ALS NAND QUAD 2-INP	01295	SN74ALS00AN
A6U34	1820-3320	4	1	IC-16BIT,10MHZ,CERAMIC MPU W/32 BIT DATA	04713	MC68000L10
A6U35	1820-2774	0	2	IC GATE TTL ALS NAND DUAL 4-INP	01295	SN74ALS20AN
A6U36	1820-3376	0	2	IC INV TTL ALS HEX	01295	SN74ALS05AN
A6U37	1820-3121	3	8	IC TRANSCEIVER TTL ALS BUS OCTL	01295	SN74ALS245AN
A6U38	1820-3121	3		IC TRANSCEIVER TTL ALS BUS OCTL	01295	SN74ALS245AN
A6U39	1820-3220	3	1	IC DCDR TTL F BIN 2-TO-4-LINE DUAL	07263	74F139PC
A6U40	1820-3376	0		IC INV TTL ALS HEX	01295	SN74ALS05AN

*** Indicates factory selected value.**

Table 1. A6 Replaceable Parts (3 of 4)

Reference Designator	HP Part Number	C D	Qty.	Description	Mfr Code	Mfr Part Number
A6U41	1820-2096	9	1	IC CNTR TTL LS BIN DUAL 4-BIT	01295	SN74LS393N
A6U42	1820-2922	0	1	IC GATE CMOS/74HC NAND QUAD 2-INP	04713	MC74HC00N
A6U43	1818-3183	2	2	IC CMOS 65536 (64K) STAT RAM 150-NS 3-S	S4013	HM6264LP-15
A6U44				NOT ASSIGNED		
A6U45				NOT ASSIGNED		
A6U46	1818-3183	2		IC CMOS 65536 (64K) STAT RAM 150-NS 3-S	S4013	HM6264LP-15
A6U47				NOT ASSIGNED		
A6U48				NOT ASSIGNED		
A6U49	1820-2657	8	1	IC GATE TTL ALS OR QUAD 2-INP	01295	SN74ALS32N
A6U50	1820-1851	2	1	IC ENCDR TTL LS	34335	AM74LS148N
A6U51	1820-3480	7	1	IC DRVR TTL ALS AND QUAD 2-INP	01295	SN74ALS1008AN
A6U52	1820-3121	3		IC TRANSCEIVER TTL ALS BUS OCTL	01295	SN74ALS245AN
A6U53	1820-3121	3		IC TRANSCEIVER TTL ALS BUS OCTL	01295	SN74ALS245AN
A6U54	1820-3121	3		IC TRANSCEIVER TTL ALS BUS OCTL	01295	SN74ALS245AN
A6U55	1820-3100	8		IC DCDR TTL ALS BIN 3-TO-8-LINE 3-INP	01295	SN74ALS138N
A6U56	1820-3100	8		IC DCDR TTL ALS BIN 3-TO-8-LINE 3-INP	01295	SN74ALS138N
A6U57	1820-2488	3		IC FF TTL ALS D-TYPE POS-EDGE-TRIG	01295	SN74ALS74AN
A6U58	1820-3145	1	2	IC DRVR TTL ALS BUS OCTL	01295	SN74ALS244AN
A6U59	1820-1245	8	1	IC DCDR TTL LS 2-TO-4-LINE DUAL 2-INP	01295	SN74LS155AN
A6U60	1826-1273	4	1	IC V RGLTR-OV-V-SEN 8-DIP-P PKG	01295	TL7705CP-B
A6U61	1820-2774	0		IC GATE TTL ALS NAND DUAL 4-INP	01295	SN74ALS20AN
A6U62	1820-3318	0	1	IC FF TTL ALS D-TYPE POS-EDGE-TRIG COM	01295	SN74ALS273N
A6U63	1820-2634	1		IC INV TTL ALS HEX	01295	SN74ALS04BN
A6U64	1820-3121	3		IC TRANSCEIVER TTL ALS BUS OCTL	01295	SN74ALS245AN
A6U65	1820-3121	3		IC TRANSCEIVER TTL ALS BUS OCTL	01295	SN74ALS245AN
A6U66	1820-3121	3		IC TRANSCEIVER TTL ALS BUS OCTL	01295	SN74ALS245AN
A6U67	1820-2777	3	1	IC CNTR TTL ALS BIN SYNCHRO	01295	SN74ALS161BN
A6U68	1820-2656	7		IC GATE TTL ALS NAND QUAD 2-INP	01295	SN74ALS00AN
A6U69	1813-0463	5	1	CLOCK-OSCILLATOR-XTAL 20.000-MHZ 0.01%	28480	1813-0463
A6U70	1820-2656	7		IC GATE TTL ALS NAND QUAD 2-INP	01295	SN74ALS00AN
A6U71	1820-2656	7		IC GATE TTL ALS NAND QUAD 2-INP	01295	SN74ALS00AN
A6U72	1820-2635	2	1	IC GATE TTL ALS AND QUAD 2-INP	01295	SN74ALS08N
A6U73	1820-1469	8	1	IC FF TTL LS J-K NEG-EDGE-TRIG CLEAR	01295	SN74LS107AN
A6U74	1820-1416	5	1	IC SCHMITT-TRIG TTL LS INV HEX 1-INP	01295	SN74LS14N
A6U75	1820-1858	9	1	IC FF TTL LS D-TYPE OCTL	01295	SN74LS377N
A6U76	1820-2711	5		IC DRVR TTL LS LINE DRVR OCTL	01295	SN74LS541N
A6U77	1820-3145	1		IC DRVR TTL ALS BUS OCTL	01295	SN74ALS244AN
A6U78	04194-80003	8	1	AM PAL16R4ADC	28480	04194-80003
A6W1 - A6W4	1258-0141	8	4	JUMPER-REMOVABLE FOR 0.025 IN SQ PINS	28480	1258-0141
A6XL	1252-0720	7	2	CONN-POST TYPE 2.54-PIN-SPCG 96-CONT	28480	1252-0720
A6XR	1252-0720	7		CONN-POST TYPE 2.54-PIN-SPCG 96-CONT	28480	1252-0720
	4040-0748	3	1	EXTR-PC BD BLK POLYC .062-IN-BD-THKNS	28480	4040-0748
	4040-0754	1	1	EXTR-PC BD BLU POLYC .062-IN-BD-THKNS	28480	4040-0754
	8150-3490	5	1	WIRE	28480	8150-3490

*** Indicates factory selected value.**

Table 1. A6 Replaceable Parts (4 of 4)

Reference Designator	HP Part Number	C D	Qty.	Description	Mfr Code	Mfr Part Number
				ROM		
				Revision 1.01		
A6U4	04195-85101		1	ROM PROGRAMMED	28480	04195-85101
A6U5	04195-85203		1	ROM PROGRAMMED	28480	04195-85203
A6U6	04195-85205		1	ROM PROGRAMMED	28480	04195-85205
A6U7	04195-85207		1	ROM PROGRAMMED	28480	04195-85207
A6U8	04195-85209		1	ROM PROGRAMMED	28480	04195-85209
A6U9	04195-85211		1	ROM PROGRAMMED	28480	04195-85211
A6U10	04195-85213		1	ROM PROGRAMMED	28480	04195-85213
A6U11	04195-85115		1	ROM PROGRAMMED	28480	04195-85115
A6U12	04195-85217		1	ROM PROGRAMMED	28480	04195-85217
A6U13	04195-85219		1	ROM PROGRAMMED	28480	04195-85219
A6U14	04195-85221		1	ROM PROGRAMMED	28480	04195-85221
A6U15				NOT INSTALLED		
A6U20	04195-85102		1	ROM PROGRAMMED	28480	04195-85102
A6U21	04195-85204		1	ROM PROGRAMMED	28480	04195-85204
A6U22	04195-85206		1	ROM PROGRAMMED	28480	04195-85206
A6U23	04195-85208		1	ROM PROGRAMMED	28480	04195-85208
A6U24	04195-85210		1	ROM PROGRAMMED	28480	04195-85210
A6U25	04195-85212		1	ROM PROGRAMMED	28480	04195-85212
A6U26	04195-85214		1	ROM PROGRAMMED	28480	04195-85214
A6U27	04195-85116		1	ROM PROGRAMMED	28480	04195-85116
A6U28	04195-85218		1	ROM PROGRAMMED	28480	04195-85218
A6U29	04195-85220		1	ROM PROGRAMMED	28480	04195-85220
A6U30	04195-85222		1	ROM PROGRAMMED	28480	04195-85222
A6U31				NOT INSTALLED		
				Revision 1.02		
A6U4	04195-85101		1	ROM PROGRAMMED	28480	04195-85101
A6U5	04195-85303		1	ROM PROGRAMMED	28480	04195-85303
A6U6	04195-85205		1	ROM PROGRAMMED	28480	04195-85205
A6U7	04195-85207		1	ROM PROGRAMMED	28480	04195-85207
A6U8	04195-85209		1	ROM PROGRAMMED	28480	04195-85209
A6U9	04195-85211		1	ROM PROGRAMMED	28480	04195-85211
A6U10	04195-85313		1	ROM PROGRAMMED	28480	04195-85313
A6U11	04195-85115		1	ROM PROGRAMMED	28480	04195-85115
A6U12	04195-85217		1	ROM PROGRAMMED	28480	04195-85217
A6U13	04195-85219		1	ROM PROGRAMMED	28480	04195-85219
A6U14	04195-85321		1	ROM PROGRAMMED	28480	04195-85321
A6U15				NOT INSTALLED		
A6U20	04195-85102		1	ROM PROGRAMMED	28480	04195-85102
A6U21	04195-85304		1	ROM PROGRAMMED	28480	04195-85304
A6U22	04195-85206		1	ROM PROGRAMMED	28480	04195-85206
A6U23	04195-85208		1	ROM PROGRAMMED	28480	04195-85208
A6U24	04195-85210		1	ROM PROGRAMMED	28480	04195-85210
A6U25	04195-85212		1	ROM PROGRAMMED	28480	04195-85212
A6U26	04195-85314		1	ROM PROGRAMMED	28480	04195-85314
A6U27	04195-85116		1	ROM PROGRAMMED	28480	04195-85116
A6U28	04195-85218		1	ROM PROGRAMMED	28480	04195-85218
A6U29	04195-85220		1	ROM PROGRAMMED	28480	04195-85220
A6U30	04195-85322		1	ROM PROGRAMMED	28480	04195-85322
A6U31				NOT INSTALLED		

*** Indicates factory selected value.**

NOTES

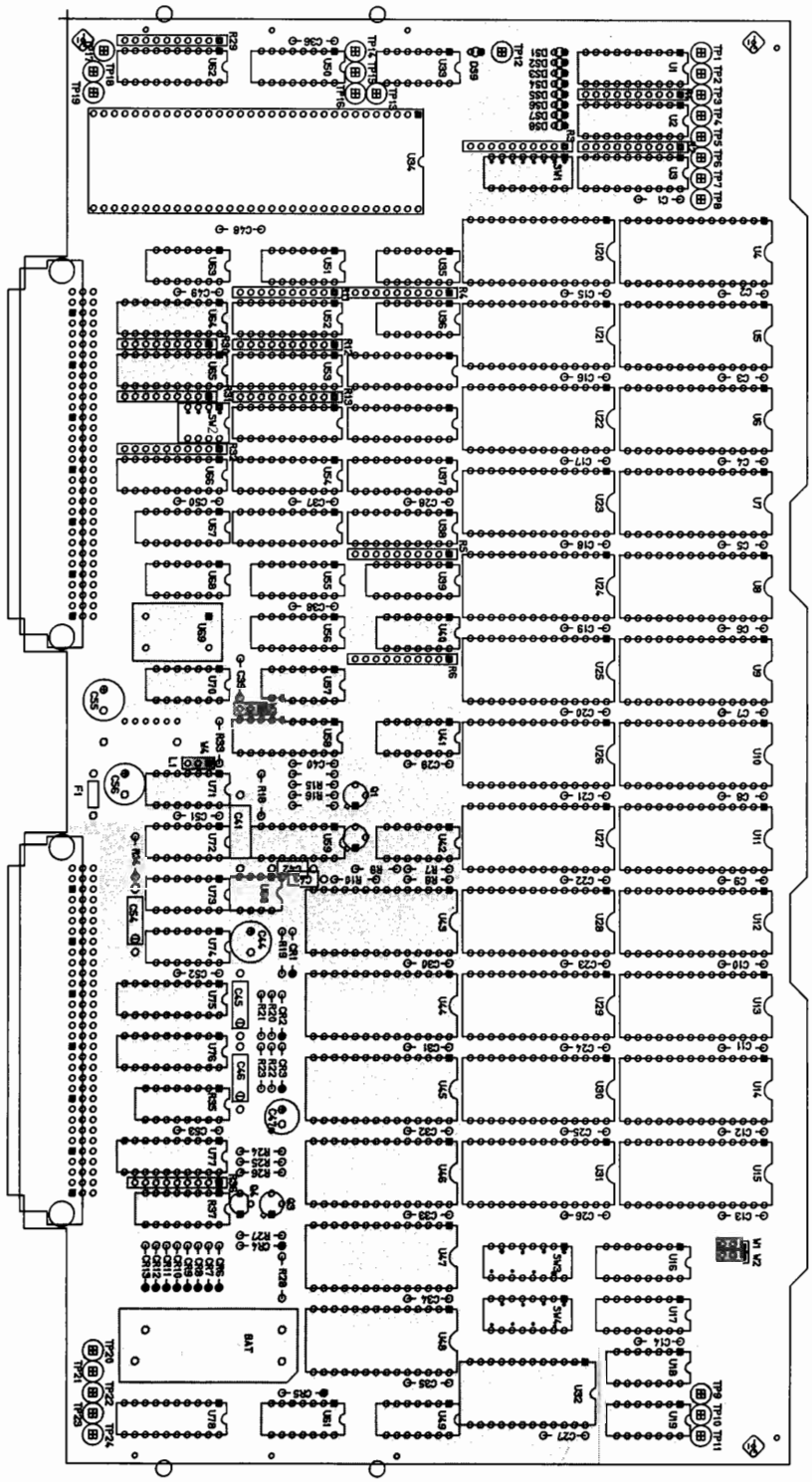

A6 Signal Processor Component Locations

A6 SIGNAL PROCESSOR

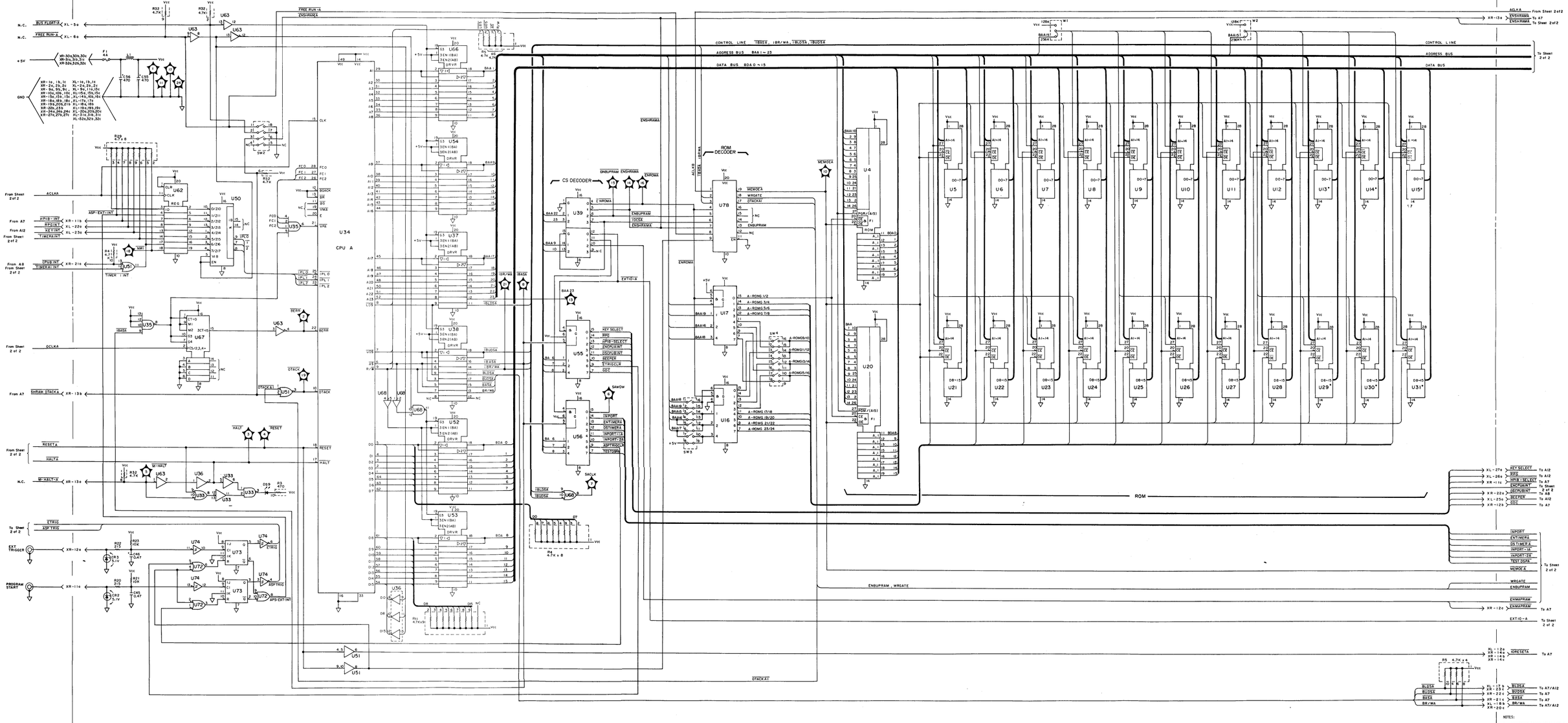

: U13, U14, U15, U29, U30 and U31 are not installed.

NOTES:

1. REFERENCE DESIGNATORS WITHIN THIS ASSEMBLY ARE ABBREVIATED. PREFIX ABBREVIATION WITH ASSEMBLY NUMBER FOR COMPLETE REFERENCE DESIGNATOR.
2. UNLESS OTHERWISE INDICATED:

   RESISTANCE IN OHMS (Ω)
   CAPACITANCE IN MICROFARADS (µF)
   INDUCTANCE IN MICROHENRIES (µH)

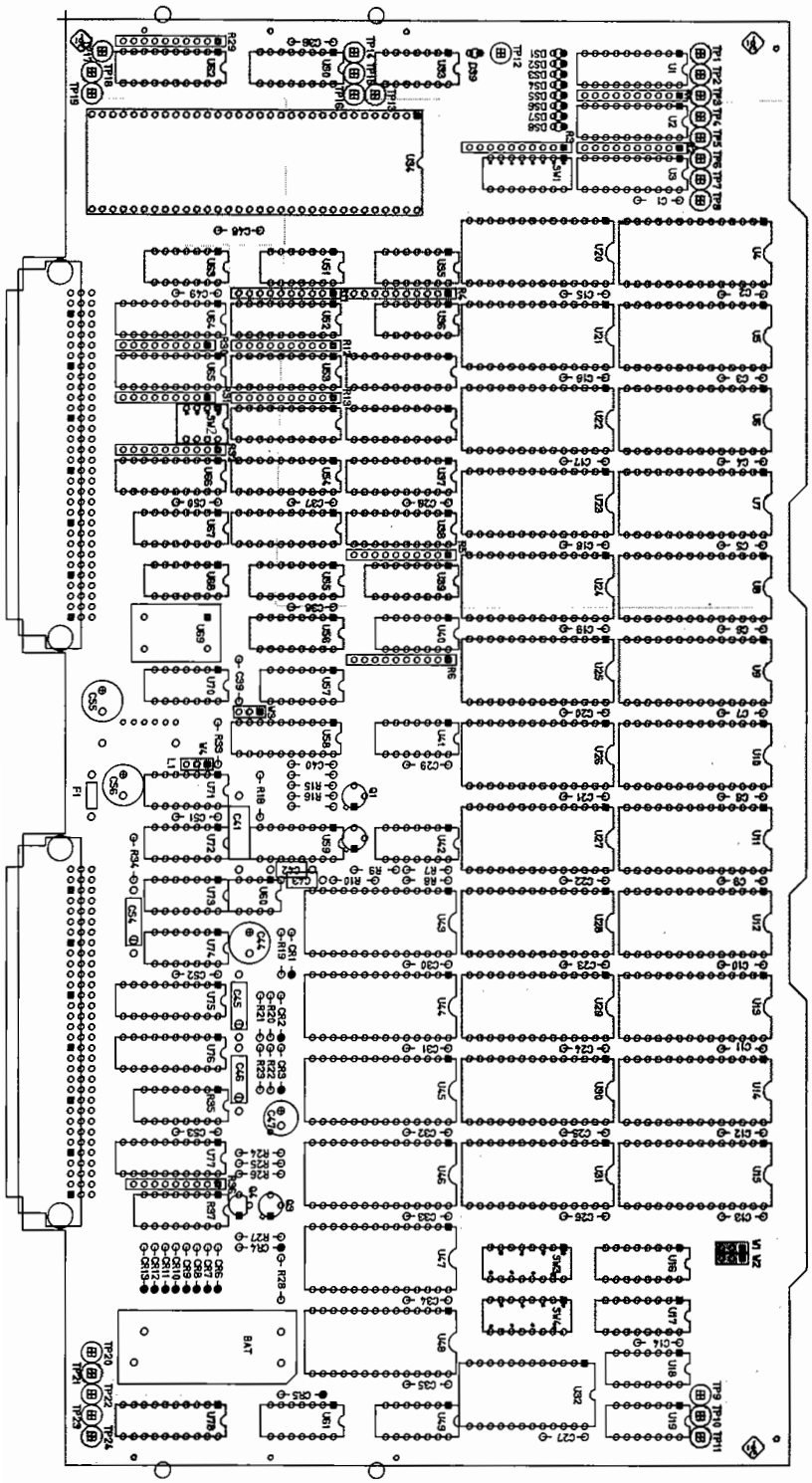

A6 Signal Processor Component Locations

A6 SIGNAL PROCESSOR 2 of 2

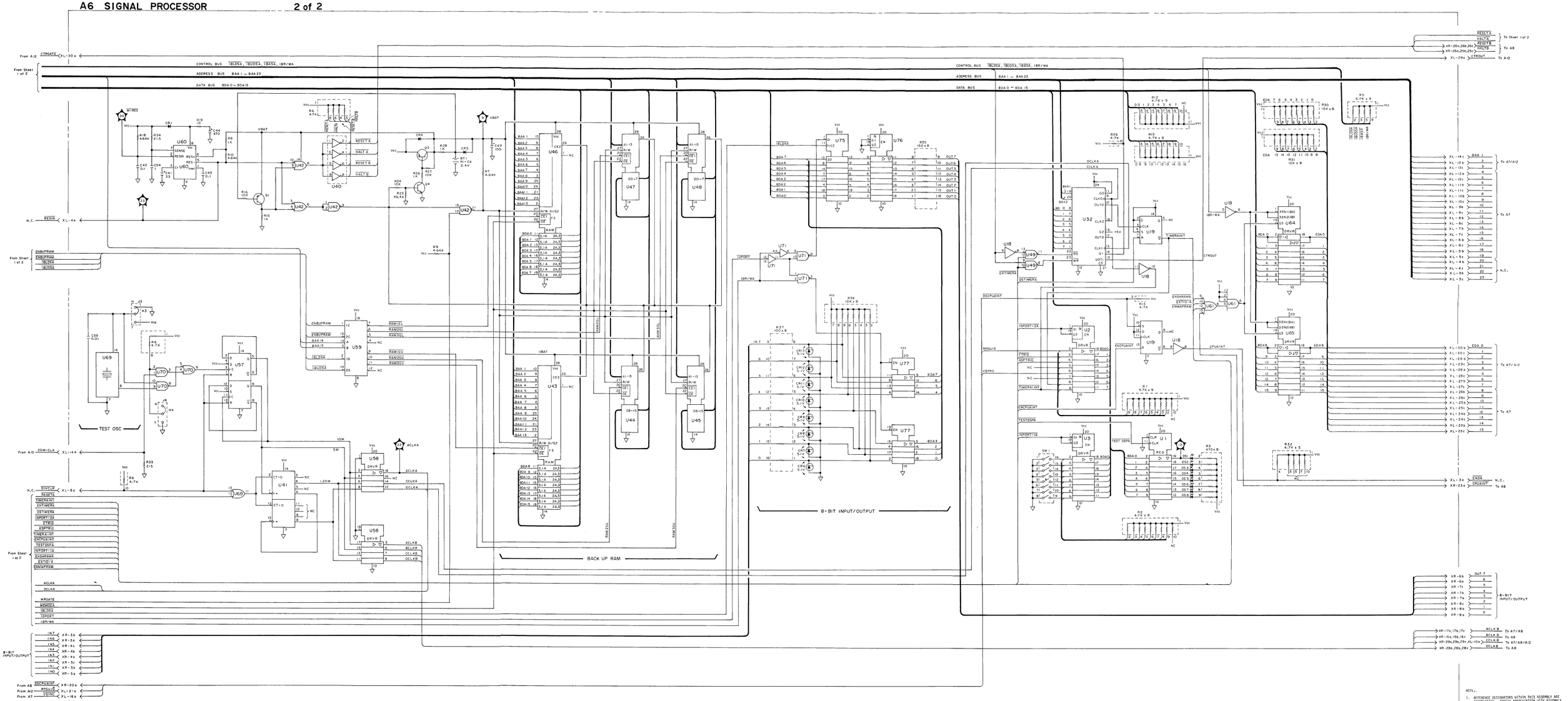

*SW1 - 5 (bit 4)
OFF: OPTION 350
ON: OPTION 375

GDC/SHARED RAM SERVICE SHEET

The A7 board contains Shared RAM, HP-IB interface, Graphics Display Controller (GDC), and video RAM. The Shared RAM is connected to the address, data, and control busses of both CPU A and CPU B, and the A7 board arbitrates the bus usage between the CPUs. The bus arbitrator in the shared RAM block controls the timing of CPU A and CPU B so that CPU A and CPU B are not simultaneously accessing the same bus. The GDC supplies the control signals to the CRT section, displays the contents of the video RAM, and writes data to the video RAM.

Figure 1 is a block diagram of the Shared RAM section. The Address, data, and control busses of CPU A and CPU B are input through tri-state buffers, and access by CPU A or CPU B is determined by the BUS ARBITRATOR. The BUS ARBITRATOR receives the chip-select signals from the CPUs and outputs an enable signal. The right to access memory is granted to the CPU whose chip select signal arrives first. For example, in the timing sequence shown in Figure 2, CPU A accesses shared RAM while CPU B waits. CPU B waits to access memory until one instruction cycle of CPU A has passed (no. 1). Similarly, if CPU B is accessing shared RAM and CPU A requires access also, CPU A waits for one instruction cycle of CPU B (no. 2).

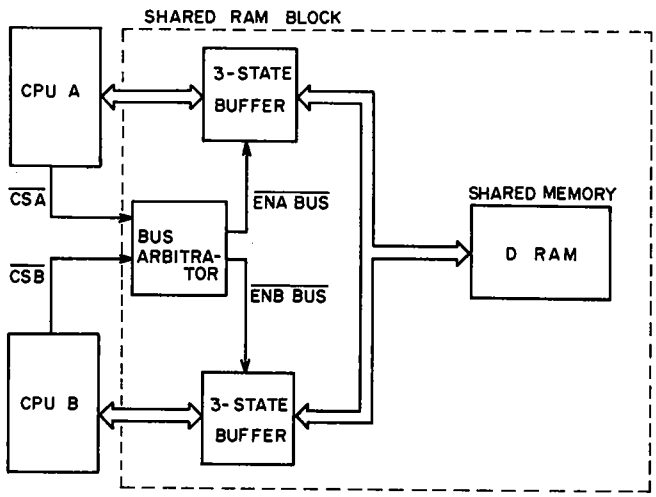

Figure 1. Shared RAM Block Diagram

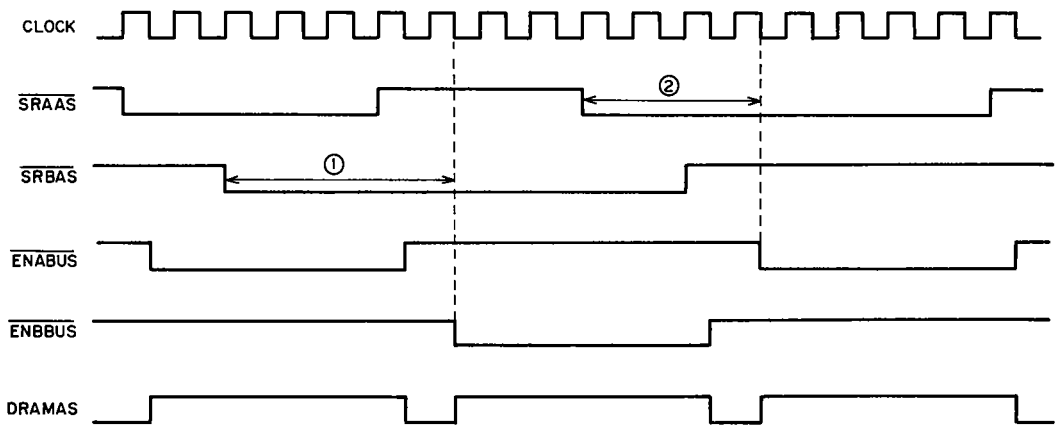

Figure 2. Shared RAM Timing Chart

The GDC section of the A7 board outputs the CRT deflection sync signals (HSYNC, VSYNC). The GDC specifies the address from which the 16-bit output data is read from the video RAM, and converts the parallel data to serial data (5-bit code). Color information is added by the COLOR MAP RAM, converting the signal from 5 bits to 6 bits (RGB signal), and is output to the CRT display section.

The Video RAM consists of five sections, trace A data is stored in video RAM 0, trace B data is stored in video RAM 1, and the data for other traces, graticule, etc. are stored in video RAMs 3 to 5.

TROUBLESHOOTING GUIDE:

A7 board has been set up under the exchange program. The part number for the exchange board is listed in the replaceable parts list.

1. Service Function:

Service function No. 104 can be used to check the video RAM section on the A7 board. Service function No. 104 is the CPU A VRAM Read/Write Test. Refer to Appendix B for the details of the service functions.

2. A7W1, A7W2, A7W3:

The normal position of A7W1, A7W2, and A7W3 are shown below.

A7W1	POSITION 1
A7W2	POSITION 2
A7W3	POSITION 1

Table 1. A7 Replaceable Parts (1 of 4)

Reference Designator	HP Part Number	C D	Qty.	Description	Mfr Code	Mfr Part Number
A7				GRAPHIC DISPLAY CONTROLLER/SHARED RAM		
A7	04194-66507	7	1	GDC/RAM BD ASY	28480	04194-66507
	04194-69507		1	GDC/RAM BD ASY (RE-BUILT)	28480	04194-69507
A7C1 - A7C5	0160-4835	7	52	CAPACITOR-FXD .1UF +-10% 50VDC CER	28480	0160-4835
A7C6	0160-4822	2	15	CAPACITOR-FXD 1000PF +-5% 100VDC CER	28480	0160-4822
A7C7	0160-5945	2	2	CAPACITOR-FXD .01UF +-10% 50VDC CER	28480	0160-5945
A7C8	0160-4832	4	21	CAPACITOR-FXD .01UF +-10% 100VDC CER	28480	0160-4832
A7C9	0160-4832	4		CAPACITOR-FXD .01UF +-10% 100VDC CER	28480	0160-4832
A7C10	0160-4822	2		CAPACITOR-FXD 1000PF +-5% 100VDC CER	28480	0160-4822
A7C11	0160-4822	2		CAPACITOR-FXD 1000PF +-5% 100VDC CER	28480	0160-4822
A7C12	0160-4822	2		CAPACITOR-FXD 1000PF +-5% 100VDC CER	28480	0160-4822
A7C13	0160-4822	2		CAPACITOR-FXD 1000PF +-5% 100VDC CER	28480	0160-4822
A7C14	0160-5945	2		CAPACITOR-FXD .01UF +-10% 50VDC CER	28480	0160-5945
A7C15	0160-4822	2		CAPACITOR-FXD 1000PF +-5% 100VDC CER	28480	0160-4822
A7C16 - A7C25	0160-4835	7		CAPACITOR-FXD .1UF +-10% 50VDC CER	28480	0160-4835
A7C26	0160-4832	4		CAPACITOR-FXD .01UF +-10% 100VDC CER	28480	0160-4832
A7C27	0160-4822	2		CAPACITOR-FXD 1000PF +-5% 100VDC CER	28480	0160-4822
A7C28	0160-4822	2		CAPACITOR-FXD 1000PF +-5% 100VDC CER	28480	0160-4822
A7C29	0160-4832	4		CAPACITOR-FXD .01UF +-10% 100VDC CER	28480	0160-4832
A7C30	0160-4832	4		CAPACITOR-FXD .01UF +-10% 100VDC CER	28480	0160-4832
A7C31	0160-4832	4		CAPACITOR-FXD .01UF +-10% 100VDC CER	28480	0160-4832
A7C32	0160-4822	2		CAPACITOR-FXD 1000PF +-5% 100VDC CER	28480	0160-4822
A7C33	0160-4822	2		CAPACITOR-FXD 1000PF +-5% 100VDC CER	28480	0160-4822
A7C34 - A7C41	0160-4835	7		CAPACITOR-FXD .1UF +-10% 50VDC CER	28480	0160-4835
A7C42 - A7C45	0160-4832	4		CAPACITOR-FXD .01UF +-10% 100VDC CER	28480	0160-4832
A7C46	0160-4822	2		CAPACITOR-FXD 1000PF +-5% 100VDC CER	28480	0160-4822
A7C47	0160-4822	2		CAPACITOR-FXD 1000PF +-5% 100VDC CER	28480	0160-4822
A7C48 - A7C51	0160-4835	7		CAPACITOR-FXD .1UF +-10% 50VDC CER	28480	0160-4835
A7C52	0160-4832	4		CAPACITOR-FXD .01UF +-10% 100VDC CER	28480	0160-4832
A7C53	0160-4832	4		CAPACITOR-FXD .01UF +-10% 100VDC CER	28480	0160-4832
A7C54 - A7C67	0160-4835	7		CAPACITOR-FXD .1UF +-10% 50VDC CER	28480	0160-4835
A7C68	0180-0291	3	1	CAPACITOR-FXD 1UF+-10% 35VDC TA	56289	150D105X9035A2
A7C69	0160-4813	1	2	CAPACITOR-FXD 180PF +-5% 100VDC CER	28480	0160-4813
A7C70	0160-4813	1		CAPACITOR-FXD 180PF +-5% 100VDC CER	28480	0160-4813
A7C71	0160-4832	4		CAPACITOR-FXD .01UF +-10% 100VDC CER	28480	0160-4832
A7C72	0160-4832	4		CAPACITOR-FXD .01UF +-10% 100VDC CER	28480	0160-4832
A7C73	0160-4822	2		CAPACITOR-FXD 1000PF +-5% 100VDC CER	28480	0160-4822
A7C74 - A7C84	0160-4835	7		CAPACITOR-FXD .1UF +-10% 50VDC CER	28480	0160-4835
A7C85 - A7C89	0160-4832	4		CAPACITOR-FXD .01UF +-10% 100VDC CER	28480	0160-4832
A7C90	0160-4822	2		CAPACITOR-FXD 1000PF +-5% 100VDC CER	28480	0160-4822

*** Indicates factory selected value.**

Table 1. A7 Replaceable Parts (2 of 4)

Reference Designator	HP Part Number	C D	Qty.	Description	Mfr Code	Mfr Part Number
A7C91	0160-4822	2		CAPACITOR-FXD 1000PF +-5% 100VDC CER	28480	0160-4822
A7C92	0160-4832	4		CAPACITOR-FXD .01UF +-10% 100VDC CER	28480	0160-4832
A7C93	0160-4832	4		CAPACITOR-FXD .01UF +-10% 100VDC CER	28480	0160-4832
A7C94	0180-3217	9	2	CAPACITOR-FXD 470UF+-20% 6.3VDC AL	28480	0180-3217
A7C95	0180-3217	9		CAPACITOR-FXD 470UF+-20% 6.3VDC AL	28480	0180-3217
A7CR1 - A7CR4	1901-0518	8	4	DIODE-SM SIG SCHOTTKY	28480	1901-0518
A7F1	2110-0712	8	1	FUSE-SUBMINIATURE 4A 125V NTD .28X.0955	28480	2110-0712
A7J1	1200-0654	7	2	SOCKET-IC 40-CONT DIP DIP-SLDR	28480	1200-0654
A7J2	1200-0654	7		SOCKET-IC 40-CONT DIP DIP-SLDR	28480	1200-0654
A7L1	9170-0847	3	1	CORE-SHIELDING BEAD	02114	56-590-65
A7R1	0698-3430	5	4	RESISTOR 21.5 1% .125W F TC=0+-100	03888	PME55-1/8-T0-21R5-F
A7R2	0698-3430	5		RESISTOR 21.5 1% .125W F TC=0+-100	03888	PME55-1/8-T0-21R5-F
A7R3	0698-3155	1	4	RESISTOR 4.64K 1% .125W F TC=0+-100	24546	CT4-1/8-T0-4641-F
A7R4	0698-3155	1		RESISTOR 4.64K 1% .125W F TC=0+-100	24546	CT4-1/8-T0-4641-F
A7R5	0698-3155	1		RESISTOR 4.64K 1% .125W F TC=0+-100	24546	CT4-1/8-T0-4641-F
A7R6 - A7R10	1810-0279	5	19	NETWORK-RES 10-SIP 4.7K OHM X 9	91637	CSC10A01-472G
A7R11	1810-0536	7	3	NETWORK-RES 16-DIP 27.0 OHM X 8	28480	1810-0536
A7R12 - A7R17	1810-0279	5		NETWORK-RES 10-SIP 4.7K OHM X 9	91637	CSC10A01-472G
A7R18	1810-0536	7		NETWORK-RES 16-DIP 27.0 OHM X 8	28480	1810-0536
A7R19	1810-0536	7		NETWORK-RES 16-DIP 27.0 OHM X 8	28480	1810-0536
A7R20	0698-3430	5		RESISTOR 21.5 1% .125W F TC=0+-100	03888	PME55-1/8-T0-21R5-F
A7R21	0757-0439	4	1	RESISTOR 6.81K 1% .125W F TC=0+-100	24546	CT4-1/8-T0-6811-F
A7R22	0698-3150	6	1	RESISTOR 2.37K 1% .125W F TC=0+-100	24546	CT4-1/8-T0-2371-F
A7R23	0698-3152	8	1	RESISTOR 3.48K 1% .125W F TC=0+-100	24546	CT4-1/8-T0-3481-F
A7R24	0698-3155	1		RESISTOR 4.64K 1% .125W F TC=0+-100	24546	CT4-1/8-T0-4641-F
A7R25 - A7R32	1810-0279	5		NETWORK-RES 10-SIP 4.7K OHM X 9	91637	CSC10A01-472G
A7R33	0698-3430	5		RESISTOR 21.5 1% .125W F TC=0+-100	03888	PME55-1/8-T0-21R5-F
A7U1	1818-3308	3	16		28480	1818-3308
A7U2				NOT INSTALLED		
A7U3	1818-3308	3			28480	1818-3308
A7U4				NOT INSTALLED		
A7U5				NOT INSTALLED		
A7U6	1820-2690	9	2	IC GATE TTL F OR QUAD 2-INP	07263	74F32PC
A7U7	1820-2696	5	1	IC FF TTL F D-TYPE POS-EDGE-TRIG COM CLK	07263	74F175PC
A7U8	1820-3100	8	1	IC DCDR TTL ALS BIN 3-TO-8-LINE 3-INP	01295	SN74ALS138N
A7U9	1820-2657	8	5	IC GATE TTL ALS OR QUAD 2-INP	01295	SN74ALS32N
A7U10	1820-2657	8		IC GATE TTL ALS OR QUAD 2-INP	01295	SN74ALS32N
A7U11	1820-2657	8		IC GATE TTL ALS OR QUAD 2-INP	01295	SN74ALS32N
A7U12	1820-2691	0	3	IC FF TTL F D-TYPE POS-EDGE-TRIG	07263	74F74PC
A7U13	1820-1433	6	2	IC SHF-RGTR TTL LS R-S SERIAL-IN PRL-OUT	01295	SN74LS164N
A7U14	1820-2690	9		IC GATE TTL F OR QUAD 2-INP	07263	74F32PC
A7U15	1820-1433	6		IC SHF-RGTR TTL LS R-S SERIAL-IN PRL-OUT	01295	SN74LS164N
A7U16	1820-3280	5	2	IC FF TTL F D-TYPE POS-EDGE-TRIG COM CLK	07263	74F174PC
A7U17	1820-2506	6	2	IC INV TTL F HEX	07263	74F04PC

*** Indicates factory selected value.**

Table 1. A7 Replaceable Parts (3 of 4)

Reference Designator	HP Part Number	C D	Qty.	Description	Mfr Code	Mfr Part Number
A7U18	1820-3348	6	1	IC CNTR TTL F BIN SYNCHRO POS-EDGE-TRIG	07263	74F163APC
A7U19	1813-0464	6	1	CLOCK-OSCILLATOR-XTAL 25.200-MHZ 0.01%	28480	1813-0464
A7U20-A7U27				NOT INSTALLED		
A7U28	1818-3308	3			28480	1818-3308
A7U29	1820-4020	3	1	IC GRAPHICS DISPLAY CONTROLLER, 6MHZ	S0545	UPD7220AD
A7U30	1820-2724	0	4	IC LCH TTL ALS TRANSPARENT OCTL	01295	SN74ALS573BN
A7U31	1820-2685	2	1	IC GATE TTL F NOR QUAD 2-INP	07263	74F02PC
A7U32	1820-2686	3	2	IC GATE TTL F AND QUAD 2-INP	07263	74F08PC
A7U33	1820-3280	5		IC FF TTL F D-TYPE POS-EDGE-TRIG COM CLK	07263	74F174PC
A7U34	1820-3121	3	22	IC TRANSCEIVER TTL ALS BUS OCTL	01295	SN74ALS245AN
A7U35	1820-3104	2	10	IC SHF-RGTR TTL ALS MULTI-MODE	01295	SN74ALS299N
A7U36	1820-3121	3		IC TRANSCEIVER TTL ALS BUS OCTL	01295	SN74ALS245AN
A7U37	1820-3104	2		IC SHF-RGTR TTL ALS MULTI-MODE	01295	SN74ALS299N
A7U38	1820-3121	3		IC TRANSCEIVER TTL ALS BUS OCTL	01295	SN74ALS245AN
A7U39	1820-3104	2		IC SHF-RGTR TTL ALS MULTI-MODE	01295	SN74ALS299N
A7U40	1820-3121	3		IC TRANSCEIVER TTL ALS BUS OCTL	01295	SN74ALS245AN
A7U41	1820-3104	2		IC SHF-RGTR TTL ALS MULTI-MODE	01295	SN74ALS299N
A7U42	1820-3121	3		IC TRANSCEIVER TTL ALS BUS OCTL	01295	SN74ALS245AN
A7U43	1820-3104	2		IC SHF-RGTR TTL ALS MULTI-MODE	01295	SN74ALS299N
A7U44	1820-2691	0		IC FF TTL F D-TYPE POS-EDGE-TRIG	07263	74F74PC
A7U45	1820-2688	5	1	IC GATE TTL F AND TPL 3-INP	07263	74F11PC
A7U46 - A7U53	1818-3308	3			28480	1818-3308
A7U54	1820-3121	3		IC TRANSCEIVER TTL ALS BUS OCTL	01295	SN74ALS245AN
A7U55	1820-2724	0		IC LCH TTL ALS TRANSPARENT OCTL	01295	SN74ALS573BN
A7U56	1820-1445	0	1	IC LCH TTL LS 4-BIT	01295	SN74LS375N
A7U57	1820-3121	3		IC TRANSCEIVER TTL ALS BUS OCTL	01295	SN74ALS245AN
A7U58	1820-3104	2		IC SHF-RGTR TTL ALS MULTI-MODE	01295	SN74ALS299N
A7U59	1820-3121	3		IC TRANSCEIVER TTL ALS BUS OCTL	01295	SN74ALS245AN
A7U60	1820-3104	2		IC SHF-RGTR TTL ALS MULTI-MODE	01295	SN74ALS299N
A7U61	1820-3121	3		IC TRANSCEIVER TTL ALS BUS OCTL	01295	SN74ALS245AN
A7U62	1820-3104	2		IC SHF-RGTR TTL ALS MULTI-MODE	01295	SN74ALS299N
A7U63	1820-3121	3		IC TRANSCEIVER TTL ALS BUS OCTL	01295	SN74ALS245AN
A7U64	1820-3104	2		IC SHF-RGTR TTL ALS MULTI-MODE	01295	SN74ALS299N
A7U65	1820-3121	3		IC TRANSCEIVER TTL ALS BUS OCTL	01295	SN74ALS245AN
A7U66	1820-3104	2		IC SHF-RGTR TTL ALS MULTI-MODE	01295	SN74ALS299N
A7U67	1820-2506	6		IC INV TTL F HEX	07263	74F04PC
A7U68	1820-2686	3		IC GATE TTL F AND QUAD 2-INP	07263	74F08PC
A7U69-A7U73				NOT INSTALLED		
A7U74	04194-80002	7	1	AM PAL16R6ADC	28480	04194-80002
A7U75	1820-4489	8	1	IC MEM-SPRT TTL LS	01295	SN74LS603AN
A7U76	1820-1281	2	1	IC DCDR TTL LS 2-TO-4-LINE DUAL	01295	SN74LS139AN
A7U77	1820-2694	3	1	IC FF TTL F J-K NEG-EDGE-TRIG	07263	74F112PC
A7U78	1820-2656	7	1	IC GATE TTL ALS NAND QUAD 2-INP	01295	SN74ALS00AN
A7U79	1820-2634	1	3	IC INV TTL ALS HEX	01295	SN74ALS04BN
A7U80 - A7U89	1818-3214	0	20	IC TMS4416-15NL	28480	1818-3214

*** Indicates factory selected value.**

Table 1. A7 Replaceable Parts (4 of 4)

Reference Designator	HP Part Number	C D	Qty.	Description	Mfr Code	Mfr Part Number
A7U90	1820-2657	8		IC GATE TTL ALS OR QUAD 2-INP	01295	SN74ALS32N
A7U91	1820-2634	1		IC INV TTL ALS HEX	01295	SN74ALS04BN
A7U92 - A7U96	1818-3308	3			28480	1818-3308
A7U97	1820-1438	1	3	IC MUXR/DATA-SEL TTL LS 2-TO-1-LINE QUAD	01295	SN74LS257BN
A7U98	1820-1438	1		IC MUXR/DATA-SEL TTL LS 2-TO-1-LINE QUAD	01295	SN74LS257BN
A7U99	1820-1438	1		IC MUXR/DATA-SEL TTL LS 2-TO-1-LINE QUAD	01295	SN74LS257BN
A7U100	1820-2881	0	1	IC GATE TTL ALS NOR TPL 3-INP	01295	SN74ALS27N
A7U101	1820-2657	8		IC GATE TTL ALS OR QUAD 2-INP	01295	SN74ALS32N
A7U102	1820-2691	0		IC FF TTL F D-TYPE POS-EDGE-TRIG	07263	74F74PC
A7U103	1816-1005	9	4	IC TTL S 64-BIT STAT RAM 30-NS 3-S	18324	N74S189FN
A7U104	1816-1005	9		IC TTL S 64-BIT STAT RAM 30-NS 3-S	18324	N74S189FN
A7U105 - A7U114	1818-3214	0		IC TMS4416-15NL	28480	1818-3214
A7U115	1820-2549	7	1	IC-8291A P HPIB	28480	1820-2549
A7U116	1820-2724	0		IC LCH TTL ALS TRANSPARENT OCTL	01295	SN74ALS573BN
A7U117	1820-2724	0		IC LCH TTL ALS TRANSPARENT OCTL	01295	SN74ALS573BN
A7U118	1820-2634	1		IC INV TTL ALS HEX	01295	SN74ALS04BN
A7U119 - A7U128	1820-3121	3		IC TRANSCEIVER TTL ALS BUS OCTL	01295	SN74ALS245AN
A7U129	1820-2711	5	1	IC DRVR TTL LS LINE DRVR OCTL	01295	SN74LS541N
A7U130	1820-2701	3	2	IC FF TTL F D-TYPE POS-EDGE-TRIG COM	07263	74F374PC
A7U131	1816-1005	9		IC TTL S 64-BIT STAT RAM 30-NS 3-S	18324	N74S189FN
A7U132	1816-1005	9		IC TTL S 64-BIT STAT RAM 30-NS 3-S	18324	N74S189FN
A7U133	1820-2701	3		IC FF TTL F D-TYPE POS-EDGE-TRIG COM	07263	74F374PC
A7U134	1820-3443	2	1	IC DRVR TTL AS LINE GATED HEX 2-INP	01295	SN74AS808AN
A7U135 - A7U138	1820-2058	3	4	IC TRANSCEIVER TTL S INSTR-BUS IEEE-488	04713	MC3448AL
A7U139	1820-3121	3		IC TRANSCEIVER TTL ALS BUS OCTL	01295	SN74ALS245AN
A7U140	1820-2488	3	1	IC FF TTL ALS D-TYPE POS-EDGE-TRIG	01295	SN74ALS74AN
A7XL	1252-0720	7	2	CONN-POST TYPE 2.54-PIN-SPCG 96-CONT	28480	1252-0720
A7XR	1252-0720	7		CONN-POST TYPE 2.54-PIN-SPCG 96-CONT	28480	1252-0720
	4040-0748	3	1	EXTR-PC BD BLK POLYC .062-IN-BD-THKNS	28480	4040-0748
	4040-0755	2	1	EXTR-PC BD VIO POLYC .062-IN-BD-THKNS	28480	4040-0755

*** Indicates factory selected value.**

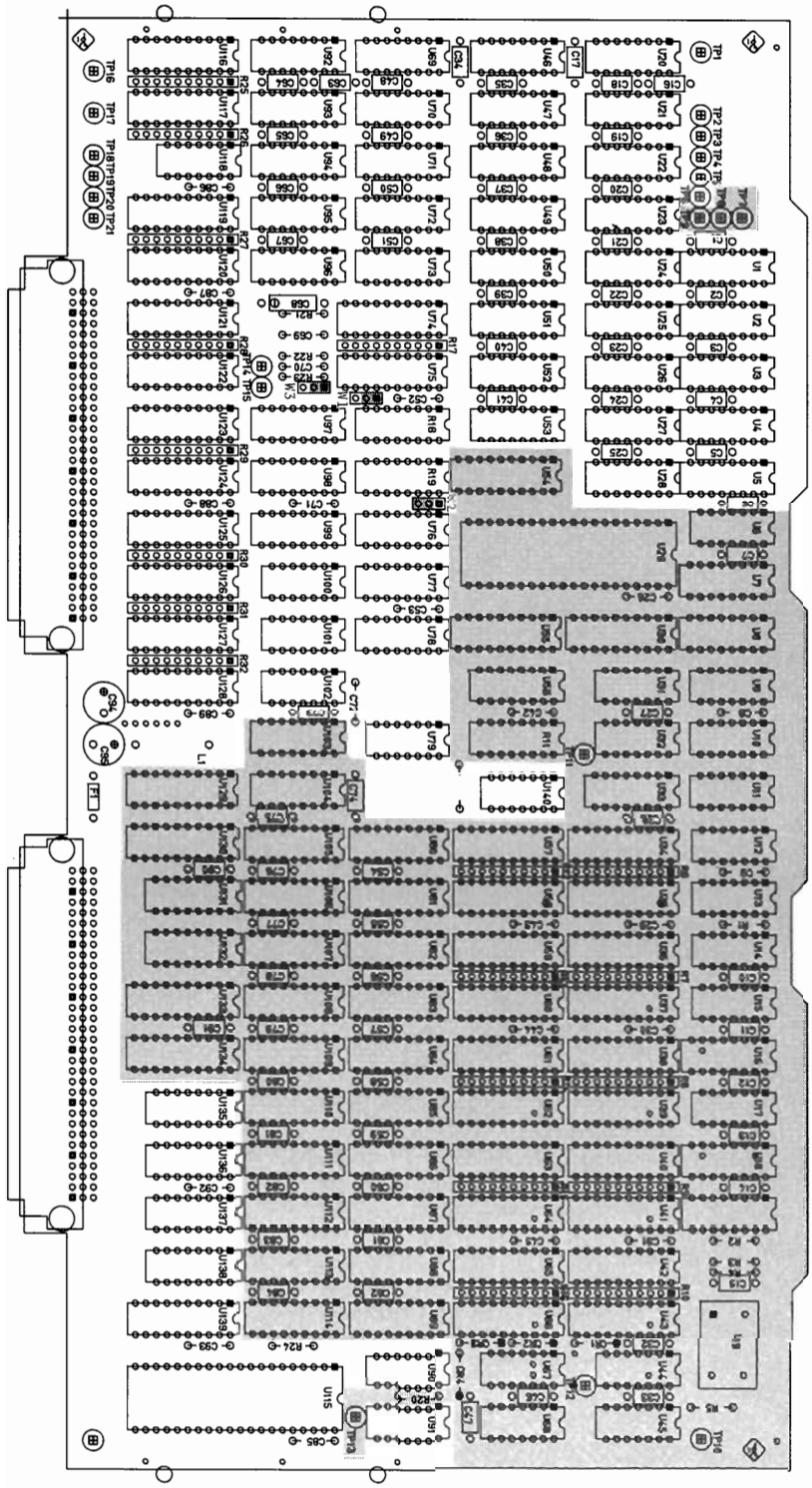

A7 Graphic Display Control/Shared RAM Component Locations

A7 GRAPHIC DISPLAY CONTROLLER / SHARED RAM 1 of 2

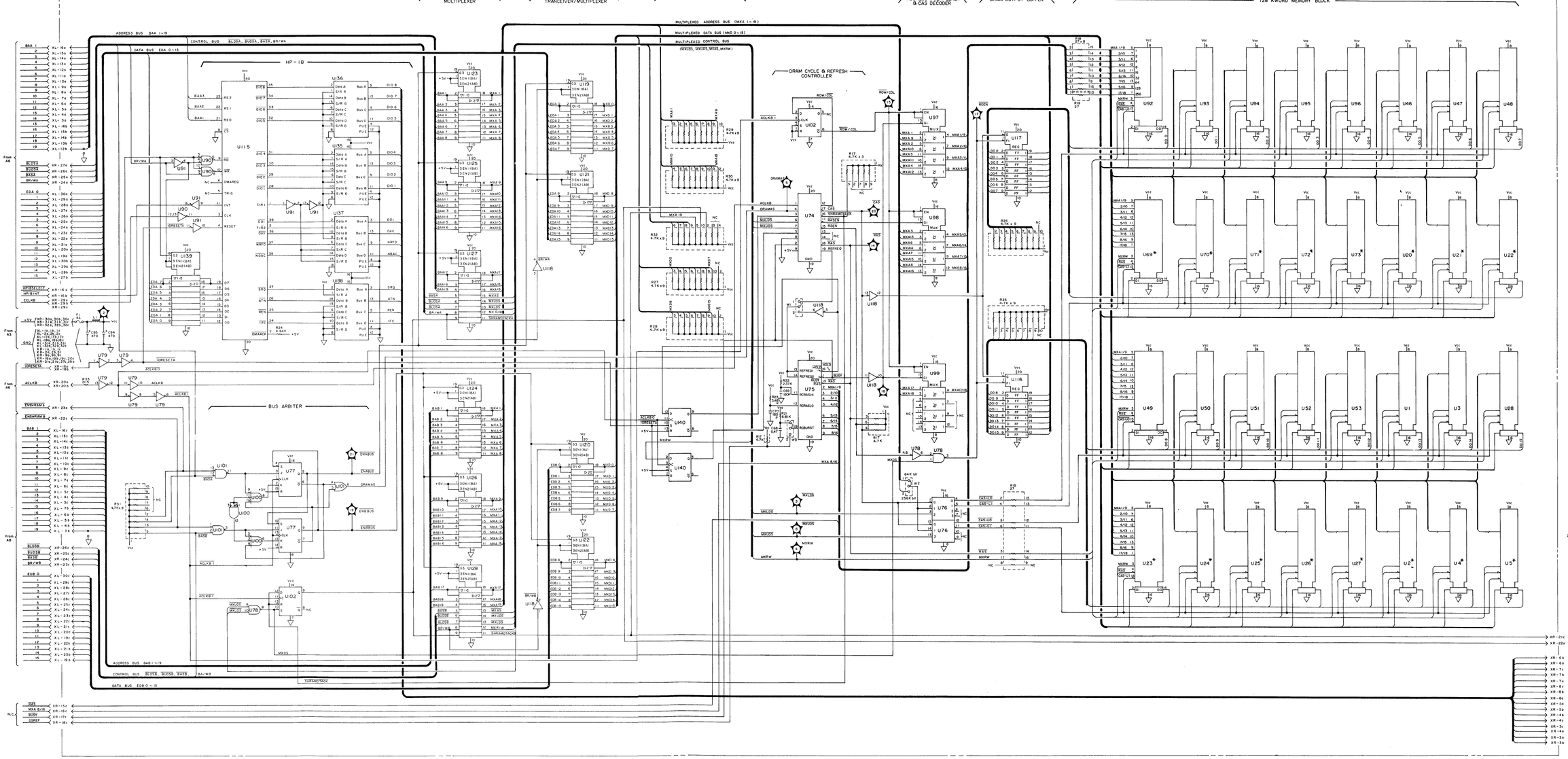

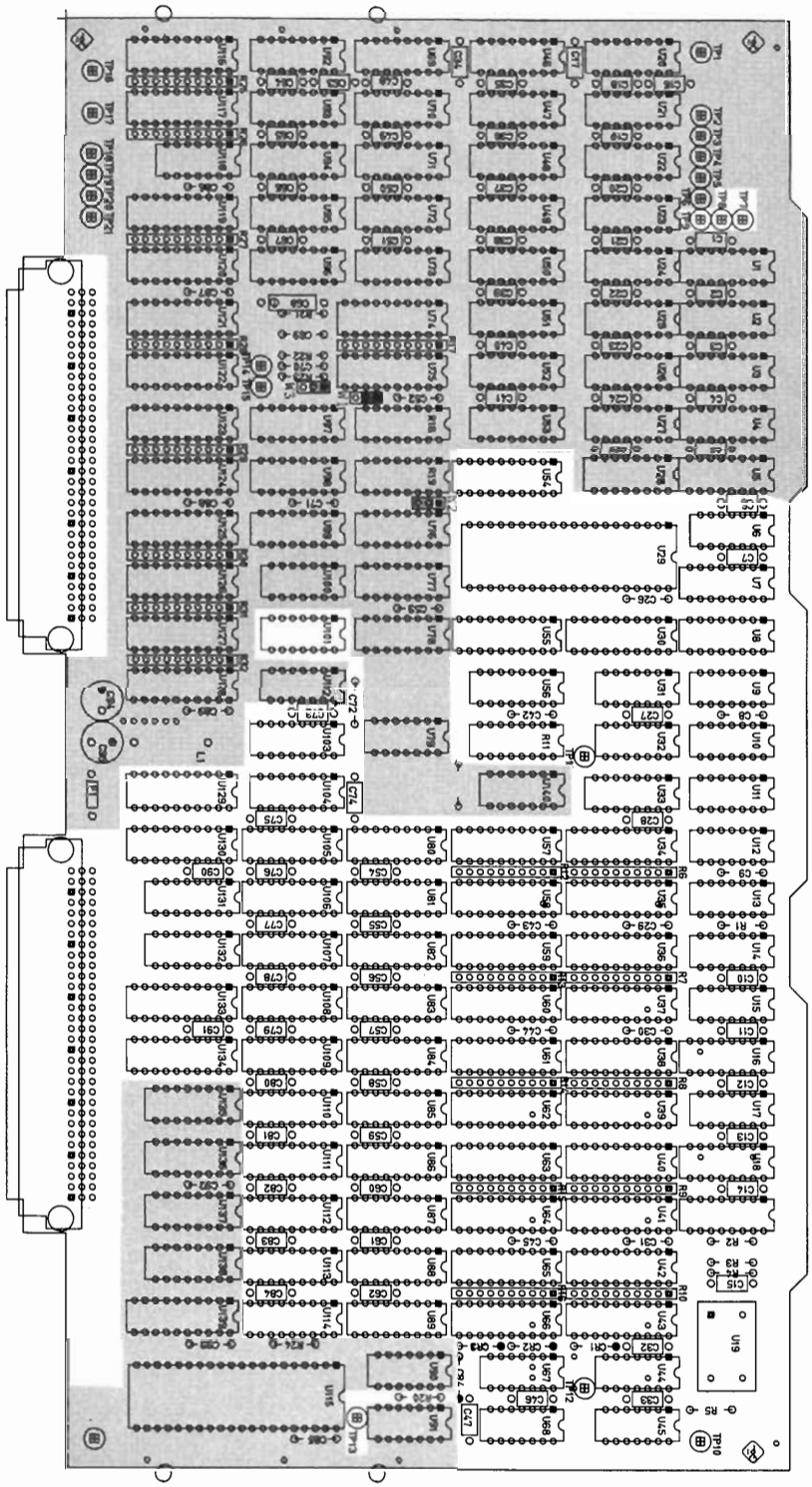

A7 Graphic Display Controller/Shared RAM Component Locations

A7 GRAPHIC DISPLAY CONTROLLER / SHARED RAM 2 of 2

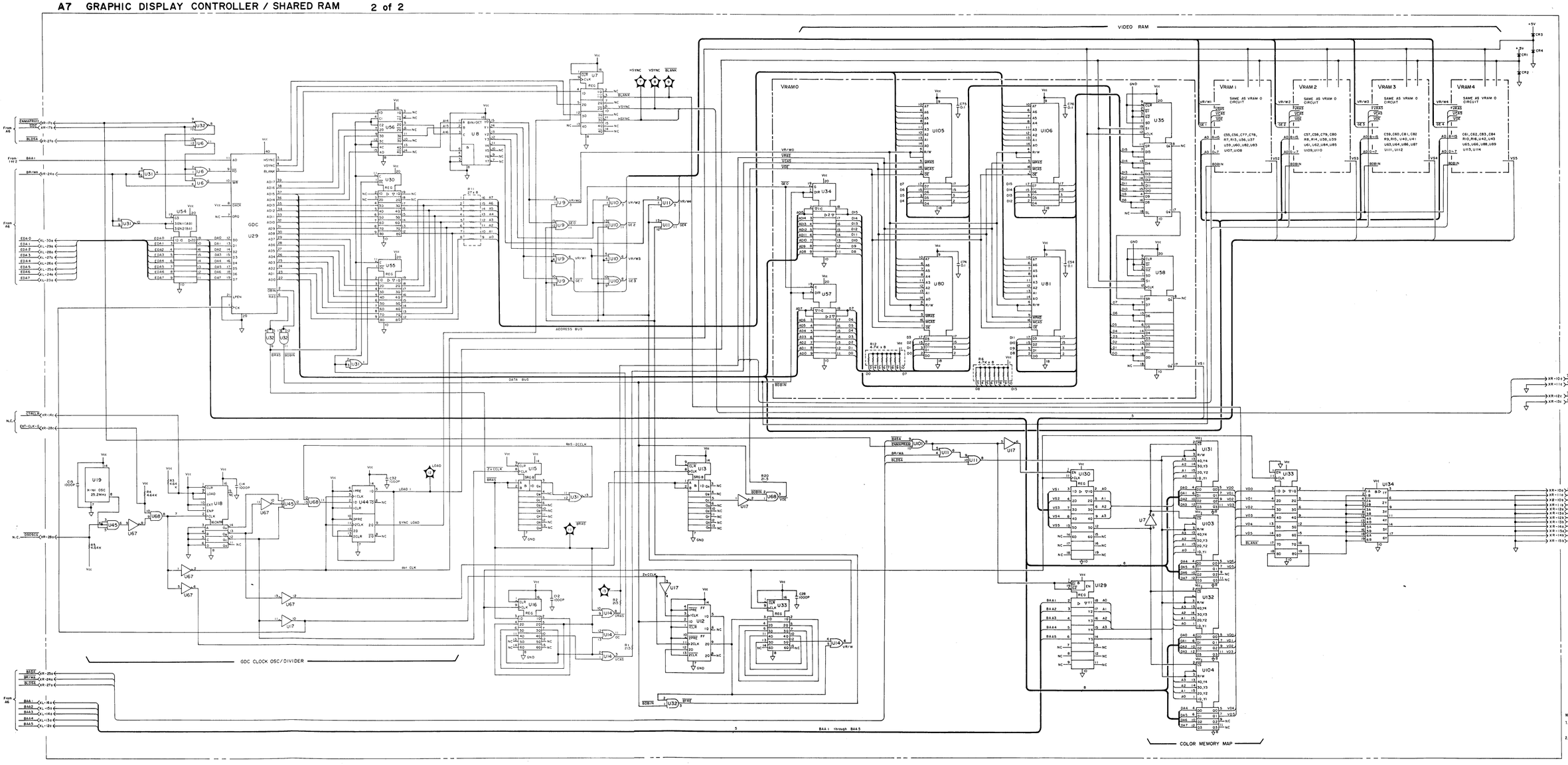

MEASUREMENT CONTROL PROCESSOR SERVICE SHEET

The A8 Measurement Control Processor board controls the measurement section; the A9 Phase Detector board, the A10 Reference Frequency Generator board, etc., and performs digital processing of the measurement data.

CIRCUIT DESCRIPTION:

The A8 board contains the CPU, ROM, RAM, EEPROM, parallel input/output port, serial output port, A-D converter (counter) and fractional N control circuit.

CPU B (U31) controls the analog measurement section, reads the measurement data from the A-D converter on the A9 board, and writes the data to RAM.

The EEPROM (U17) is an electrically erasable ROM where calibration information is stored.

The Parallel Input Port is used to read the status of the analog circuits and the VCO unlock/ lock status of the fractional N loop.

The Parallel Output Port is used to send the signals to control the analog circuits (analog switches) which must be changed quickly for each measurement point during a measurement.

The Serial Output Port is used to send the analog circuit control signals which are not changed at each measurement point.

The A-D counters (U43, U44) supply timing signals to the A-D converter on the A9 board and receives count timing signals from the A-D converter.

The Fractional N Control circuit (U20 to U24) converts the 8-bit data (from CPU B) to 4-bit data (for the fractional N chip on the A10 board), and sends the setup frequency data to the fractional N loop (A10 board).

TROUBLESHOOTING GUIDE:

The ROM-less board was set up to prevent the revision of the firmware installed on the A8 board from mismatching the revision of the firmware installed on the A6 board. There are two types of ROM-less boards; a rebuilt board and a newly manufactured board. The rebuilt ROM-less board has been set up under the exchange program. Refer to the replaceable parts list for the part numbers for these boards.

If the A8 board is defective for any reason other than the ROMs, order a ROM-less A8 board. Install the ROMs from the defective A8 board on the replacement A8 board.

NOTE

PN 04195-66508 is not the reorder number, but the manufacturing number. Do not order the A8 board using the manufacturing number.

1. Power on Self Test:

The HP 4195A performs the power on self test every time it is turned on. If during the power on self test the following message is displayed on the HP 4195A's display, replace the ROM indicated in the defective ROM message. The relationship between the defective ROM number and the reference designator (ROM position) for that ROM is shown in Figure 1.

"B: ROM check sum err ID=XXX" (XXX: defective ROM number)

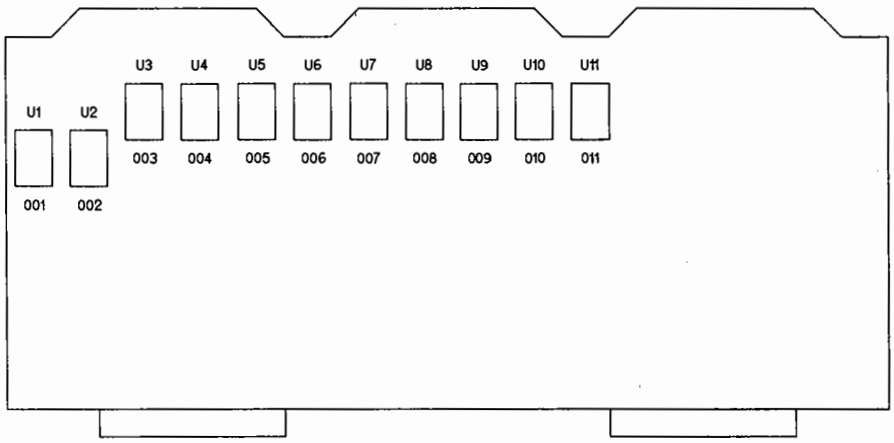

Figure 1. Defective ROM number and Reference Designator

The A6 and A8 boards have LED indicator arrays which indicate the results of the self test. To understand what the LED indicators are telling you, refer to Figure 2 in the Signal Processor Service Sheet for the A6 board.

If the HP 4195A stops during the power on self test, and the A6DS5 and A8DS5 are ON (the "Result **F**" condition on Figure 2 in the Signal Processor Service Sheet), replace A8U1 and A8U2.

2. A8DS9:

When DS9 is ON, CPU B stopped due to a BUS ERROR. Cycle the power switch to reset the instrument.

3. A8SW1, A8SW2:

The normal settings for A8SW1, and A8SW2 are shown below.

A8SW1:

A8SW1-1	OFF
A8SW1-2	OFF
A8SW1-3	OFF
A8SW1-4	OFF
A8SW1-5	OFF
A8SW1-6	OFF
A8SW1-7	OFF
A8SW1-8	OFF

A8SW2:

A8SW2-1	OFF
A8SW2-2	OFF
A8SW2-3	OFF
A8SW2-4	OFF

4. A8W1, A8W2, A8W3, A8W4, A8W5, A8W6:

The normal settings for A8W1 through A8W6 are shown below.

A8W1	**1** side	A8W4	**2** side
A8W2	**1** side	A8W5	**2** side
A8W3	**2** side	A8W6	**2** side

NOTE

A8SW1-5 and A8W2 are used to update the calibration data after adjusting the HP 4195A. The calibration data updating is described in the HP 4195A Maintenance Manual.

Table 1. A8 Replaceable Parts (1 of 3)

Reference Designator	HP Part Number	C D	Qty.	Description	Mfr Code	Mfr Part Number
A8				MEASUREMENT CONTROL PROCESSOR		
A8	04195-66608	9	1	MEAS PROC BD AS W/O ROM	28480	04195-66608
	04195-69608		1	MEAS PROC BD AS W/O ROM (RE-BUILT)	28480	04195-69608
A8C1 -						
A8C42	0160-4832	4	42	CAPACITOR-FXD .01UF +-10% 100VDC CER	28480	0160-4832
A8C43	0180-3217	9	2	CAPACITOR-FXD 470UF+-20% 6.3VDC AL	28480	0180-3217
A8C44	0180-3217	9		CAPACITOR-FXD 470UF+-20% 6.3VDC AL	28480	0180-3217
A8CR1	1902-0951	5	1	DIODE-ZNR 5.1V 5% DO-35 PD=.4W TC=+.035%	28480	1902-0951
A8DS1 -						
A8DS9	1990-0665	3	9	LED-LAMP LUM-INT=1MCD IF=30MA-MAX BVR=5V	28480	1990-0665
A8F1	2110-0592	2	1	FUSE 4A 125V NTD .281X.093	28480	2110-0592
A8J1	1252-0720	7	2	CONN-POST TYPE 2.54-PIN-SPCG 96-CONT	28480	1252-0720
A8J2	1252-0720	7		CONN-POST TYPE 2.54-PIN-SPCG 96-CONT	28480	1252-0720
A8J3 -						
A8J8	1251-4822	6	6	CONN-POST TYPE .100-PIN-SPCG 3-CONT	28480	1251-4822
A8R1	1810-0273	9	1	NETWORK-RES 10-SIP 470.0 OHM X 9	91637	CSC10A01-471G
A8R2 -						
A8R6	1810-0279	5	11	NETWORK-RES 10-SIP 4.7K OHM X 9	91637	CSC10A01-472G
A8R7	0698-3155	1	3	RESISTOR 4.64K 1% .125W F TC=0+-100	24546	CT4-1/8-T0-4641-F
A8R8	0698-3155	1		RESISTOR 4.64K 1% .125W F TC=0+-100	24546	CT4-1/8-T0-4641-F
A8R9	0698-3155	1		RESISTOR 4.64K 1% .125W F TC=0+-100	24546	CT4-1/8-T0-4641-F
A8R10 -						
A8R14	1810-0279	5		NETWORK-RES 10-SIP 4.7K OHM X 9	91637	CSC10A01-472G
A8R15	1810-0269	3	4	NETWORK-RES 9-SIP 10.0K OHM X 8	28480	1810-0269
A8R16	1810-0269	3		NETWORK-RES 9-SIP 10.0K OHM X 8	28480	1810-0269
A8R17	1810-0269	3		NETWORK-RES 9-SIP 10.0K OHM X 8	28480	1810-0269
A8R18				NOT ASSIGNED		
A8R19	1810-0269	3		NETWORK-RES 9-SIP 10.0K OHM X 8	28480	1810-0269
A8R20	1810-0279	5		NETWORK-RES 10-SIP 4.7K OHM X 9	91637	CSC10A01-472G
A8R21	0757-0442	9	3	RESISTOR 10K 1% .125W F TC=0+-100	24546	CT4-1/8-T0-1002-F
A8R22	0757-0442	9		RESISTOR 10K 1% .125W F TC=0+-100	24546	CT4-1/8-T0-1002-F
A8R23	0757-0401	0	1	RESISTOR 100 1% .125W F TC=0+-100	24546	CT4-1/8-T0-101-F
A8R24	0757-0442	9		RESISTOR 10K 1% .125W F TC=0+-100	24546	CT4-1/8-T0-1002-F
A8SW1	3101-2831	8	1	SWITCH 8P	28480	3101-2831
A8SW2	3101-2832	9	1	SWITCH 4P	28480	3101-2832
A8U1 -				PROGRAMMED ROM		
A6U10				(Refer to the end of this table)		
A8U11 -						
A8U16	1818-3183	2	6	IC CMOS 65536 (64K) STAT RAM 150-NS 3-S	S4013	HM6264LP-15
A8U17	1818-3801	1	1	IC NMOS 65536 (64K) ELEC-ER-PROM 300-NS	S4013	HN58064P-30
A8U18				NOT ASSIGNED		
A8U19	1820-2757	9	1	IC FF TTL ALS D-TYPE POS-EDGE-TRIG OCTL	01295	SN74ALS574AN
A8U20	1820-1975	1	2	IC SHF-RGTR TTL LS NEG-EDGE-TRIG PRL-IN	01295	SN74LS165AN
A8U21	1820-1975	1		IC SHF-RGTR TTL LS NEG-EDGE-TRIG PRL-IN	01295	SN74LS165AN
A8U22	04194-80005	0	1	DM PAL12L6NC	28480	04194-80005
A8U23	1820-2488	3	3	IC FF TTL ALS D-TYPE POS-EDGE-TRIG	01295	SN74ALS74AN

*** Indicates factory selected value.**

Table 1. A8 Replaceable Parts (2 of 3)

Reference Designator	HP Part Number	C D	Qty.	Description	Mfr Code	Mfr Part Number
A8U24	1820-3145	1	3	IC DRVR TTL ALS BUS OCTL	01295	SN74ALS244AN
A8U25	1820-1858	9	3	IC FF TTL LS D-TYPE OCTL	01295	SN74LS377N
A8U26	04194-80004	9	1	AM PAL16R4ADC	28480	04194-80004
A8U27	1820-3100	8	5	IC DCDR TTL ALS BIN 3-TO-8-LINE 3-INP	01295	SN74ALS138N
A8U28	1820-3121	3	8	IC TRANSCEIVER TTL ALS BUS OCTL	01295	SN74ALS245AN
A8U29	1820-1245	8	1	IC DCDR TTL LS 2-TO-4-LINE DUAL 2-INP	01295	SN74LS155AN
A8U30	1820-3121	3		IC TRANSCEIVER TTL ALS BUS OCTL	01295	SN74ALS245AN
A8U31	1820-4570	8	1	IC-16-BIT,10MHZ,PLAST MPU,32 B DATA BUS	11710	TF68000P10
A8U32	1820-3121	3		IC TRANSCEIVER TTL ALS BUS OCTL	01295	SN74ALS245AN
A8U33	1820-1851	2	1	IC ENCDR TTL LS	34335	AM74LS148N
A8U34	1820-2772	8	1	IC FF TTL ALS J-K NEG-EDGE-TRIG	01295	SN74ALS112AN
A8U35	1820-2634	1	3	IC INV TTL ALS HEX	01295	SN74ALS04BN
A8U36	1820-2657	8	4	IC GATE TTL ALS OR QUAD 2-INP	01295	SN74ALS32N
A8U37	1820-2774	0	1	IC GATE TTL ALS NAND DUAL 4-INP	01295	SN74ALS20AN
A8U38	1820-3220	3	1	IC DCDR TTL F BIN 2-TO-4-LINE DUAL	07263	74F139PC
A8U39	1820-2758	0	1	IC FF TTL ALS J-K BAR POS-EDGE-TRIG	01295	SN74ALS109AN
A8U40				NOT ASSIGNED		
A8U41				NOT ASSIGNED		
A8U42	1820-2657	8		IC GATE TTL ALS OR QUAD 2-INP	01295	SN74ALS32N
A8U43	1820-4927	9	3	CMOS-COUNTER 16B	28480	1820-4927
A8U44	1820-4927	9		CMOS-COUNTER 16B	28480	1820-4927
A8U45	1820-4927	9		CMOS-COUNTER 16B	28480	1820-4927
A8U46	1820-2711	5	7	IC DRVR TTL LS LINE DRVR OCTL	01295	SN74LS541N
A8U47	1820-3836	7	1	IC GATE-ARY CMOS	09761	MSM60325
A8U48	1820-2775	1	1	IC GATE TTL ALS NAND TPL 3-INP	01295	SN74ALS10N
A8U49	1820-3121	3		IC TRANSCEIVER TTL ALS BUS OCTL	01295	SN74ALS245AN
A8U50	1820-3100	8		IC DCDR TTL ALS BIN 3-TO-8-LINE 3-INP	01295	SN74ALS138N
A8U51	1820-3318	0	1	IC FF TTL ALS D-TYPE POS-EDGE-TRIG COM	01295	SN74ALS273N
A8U52	1820-3480	7	1	IC DRVR TTL ALS AND QUAD 2-INP	01295	SN74ALS1008AN
A8U53	1820-2506	6	1	IC INV TTL F HEX	07263	74F04PC
A8U54	1820-2777	3	1	IC CNTR TTL ALS BIN SYNCHRO	01295	SN74ALS161BN
A8U55	1820-2656	7	4	IC GATE TTL ALS NAND QUAD 2-INP	01295	SN74ALS00AN
A8U56	1820-2657	8		IC GATE TTL ALS OR QUAD 2-INP	01295	SN74ALS32N
A8U57	1820-2656	7		IC GATE TTL ALS NAND QUAD 2-INP	01295	SN74ALS00AN
A8U58				NOT ASSIGNED		
A8U59				NOT ASSIGNED		
A8U60	1820-3100	8		IC DCDR TTL ALS BIN 3-TO-8-LINE 3-INP	01295	SN74ALS138N
A8U61	1820-2711	5		IC DRVR TTL LS LINE DRVR OCTL	01295	SN74LS541N
A8U62	1820-3100	8		IC DCDR TTL ALS BIN 3-TO-8-LINE 3-INP	01295	SN74ALS138N
A8U63	1820-3100	8		IC DCDR TTL ALS BIN 3-TO-8-LINE 3-INP	01295	SN74ALS138N
A8U64	1820-3121	3		IC TRANSCEIVER TTL ALS BUS OCTL	01295	SN74ALS245AN
A8U65	1820-2711	5		IC DRVR TTL LS LINE DRVR OCTL	01295	SN74LS541N
A8U66	1820-1858	9		IC FF TTL LS D-TYPE OCTL	01295	SN74LS377N
A8U67	1820-1858	9		IC FF TTL LS D-TYPE OCTL	01295	SN74LS377N
A8U68	1820-2711	5		IC DRVR TTL LS LINE DRVR OCTL	01295	SN74LS541N
A8U69	1820-2634	1		IC INV TTL ALS HEX	01295	SN74ALS04BN
A8U70	1820-2488	3		IC FF TTL ALS D-TYPE POS-EDGE-TRIG	01295	SN74ALS74AN
A8U71	1820-2488	3		IC FF TTL ALS D-TYPE POS-EDGE-TRIG	01295	SN74ALS74AN
A8U72	1820-2635	2	3	IC GATE TTL ALS AND QUAD 2-INP	01295	SN74ALS08N
A8U73	1820-2711	5		IC DRVR TTL LS LINE DRVR OCTL	01295	SN74LS541N
A8U74	1820-2711	5		IC DRVR TTL LS LINE DRVR OCTL	01295	SN74LS541N
A8U75	1820-3121	3		IC TRANSCEIVER TTL ALS BUS OCTL	01295	SN74ALS245AN

*** Indicates factory selected value.**

Table 1. A8 Replaceable Parts (3 of 3)

Reference Designator	HP Part Number	C D	Qty.	Description	Mfr Code	Mfr Part Number
A8U76	1820-3121	3		IC TRANSCEIVER TTL ALS BUS OCTL	01295	SN74ALS245AN
A8U77	1820-2711	5		IC DRVR TTL LS LINE DRVR OCTL	01295	SN74LS541N
A8U78	1820-2634	1		IC INV TTL ALS HEX	01295	SN74ALS04BN
A8U79	1820-3121	3		IC TRANSCEIVER TTL ALS BUS OCTL	01295	SN74ALS245AN
A8U80	1820-3376	0	1	IC INV TTL ALS HEX	01295	SN74ALS05AN
A8U81	1820-3145	1		IC DRVR TTL ALS BUS OCTL	01295	SN74ALS244AN
A8U82				NOT ASSIGNED		
A8U83	1820-3145	1		IC DRVR TTL ALS BUS OCTL	01295	SN74ALS244AN
A8U84	1820-2656	7		IC GATE TTL ALS NAND QUAD 2-INP	01295	SN74ALS00AN
A8U85	1820-2657	8		IC GATE TTL ALS OR QUAD 2-INP	01295	SN74ALS32N
A8U86	1820-1469	8	1	IC FF TTL LS J-K NEG-EDGE-TRIG CLEAR	01295	SN74LS107AN
A8U87	1820-2635	2		IC GATE TTL ALS AND QUAD 2-INP	01295	SN74ALS08N
A8U88	1820-2635	2		IC GATE TTL ALS AND QUAD 2-INP	01295	SN74ALS08N
A8U89	1820-2656	7		IC GATE TTL ALS NAND QUAD 2-INP	01295	SN74ALS00AN
A8W1 - A8W6	1258-0141	8	6	JUMPER-REMOVABLE FOR 0.025 IN SQ PINS	28480	1258-0141
	4040-0747	2	1	EXTR-PC BD GRA POLYC .062-IN-BD-THKNS	28480	4040-0747
	4040-0748	3	1	EXTR-PC BD BLK POLYC .062-IN-BD-THKNS	28480	4040-0748
	9170-0847	3	8	CORE-SHIELDING BEAD	02114	56-590-65
				ROM		
				Revision 1.01		
A8U1	04195-85231		1	ROM PROGRAMMED	28480	04195-85231
A8U2	04195-85232		1	ROM PROGRAMMED	28480	04195-85232
A8U3	04195-85233		1	ROM PROGRAMMED	28480	04195-85233
A8U4	04195-85234		1	ROM PROGRAMMED	28480	04195-85234
A8U5	04195-85235		1	ROM PROGRAMMED	28480	04195-85235
A8U6	04195-85236		1	ROM PROGRAMMED	28480	04195-85236
A8U7 - A8U10				NOT INSTALLED		
				Revision 1.02		
A8U1	04195-85231		1	ROM PROGRAMMED	28480	04195-85231
A8U2	04195-85232		1	ROM PROGRAMMED	28480	04195-85232
A8U3	04195-85333		1	ROM PROGRAMMED	28480	04195-85333
A8U4	04195-85334		1	ROM PROGRAMMED	28480	04195-85334
A8U5	04195-85235		1	ROM PROGRAMMED	28480	04195-85235
A8U6	04195-85236		1	ROM PROGRAMMED	28480	04195-85236
A8U7 - A8U10				NOT INSTALLED		

*** Indicates factory selected value.**

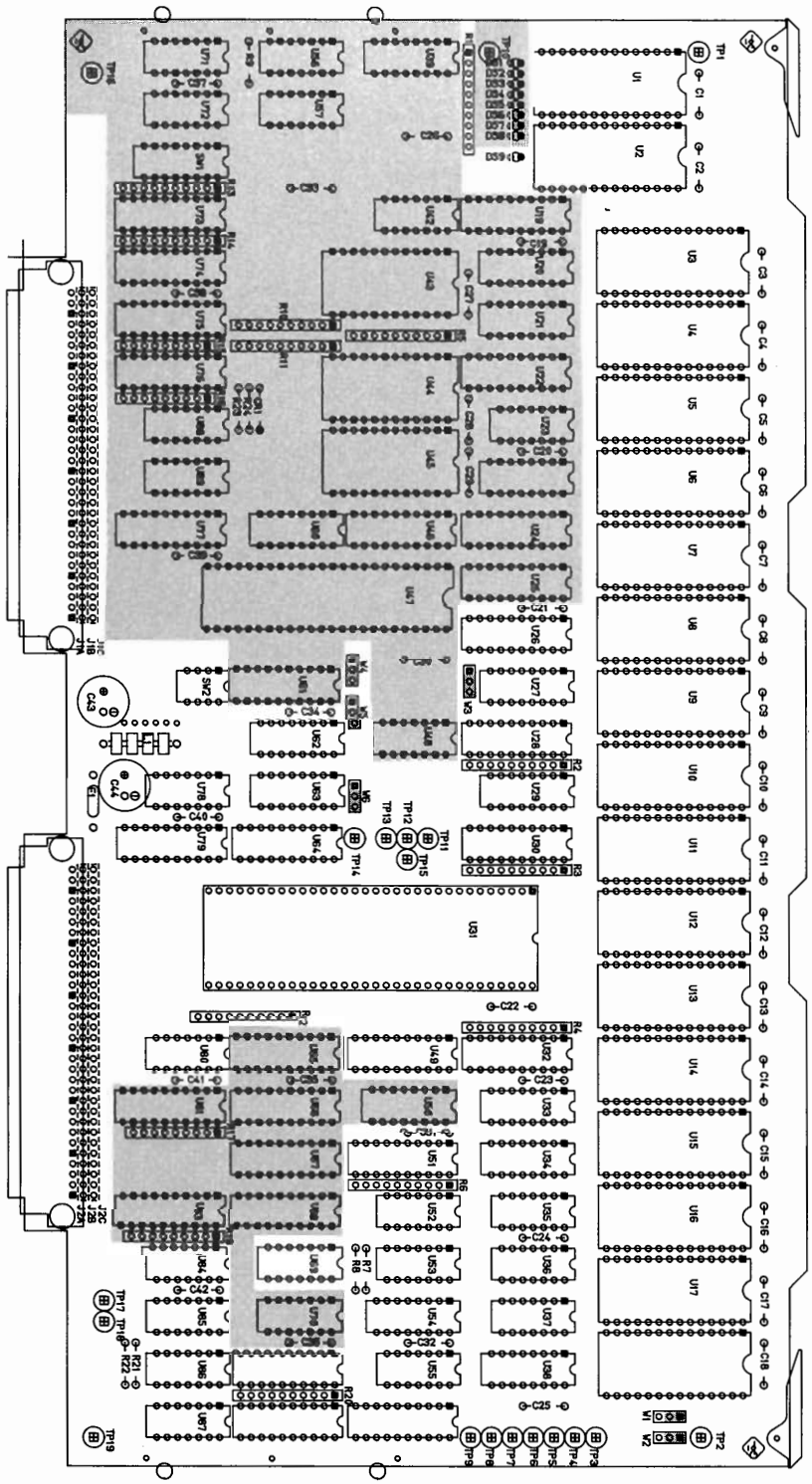

A8 Measurement Control Processor Component Locations

A8 MEASUREMENT CONTROL PROCESSOR 1 of 3

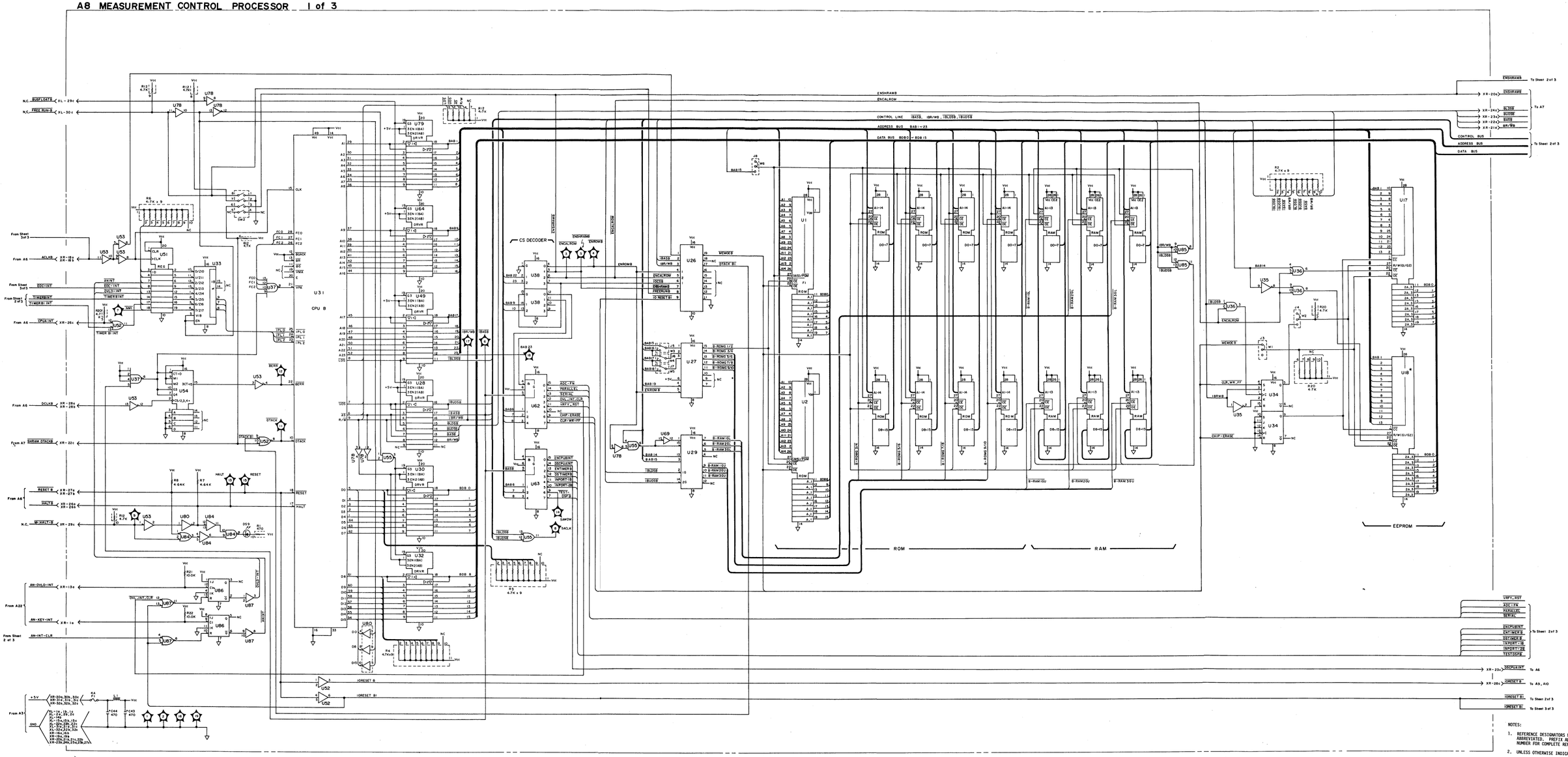

NOTES:

1. REFERENCE DESIGNATORS WITHIN THIS ASSEMBLY ARE ABBREVIATED. PREFIX ABBREVIATION WITH ASSEMBLY NUMBER FOR COMPLETE REFERENCE DESIGNATOR.
2. UNLESS OTHERWISE INDICATED:

   RESISTANCE IN OHMS (Ω)
   CAPACITANCE IN MICROFARADS (uF)
   INDUCTANCE IN MICROHENRIES (uH)

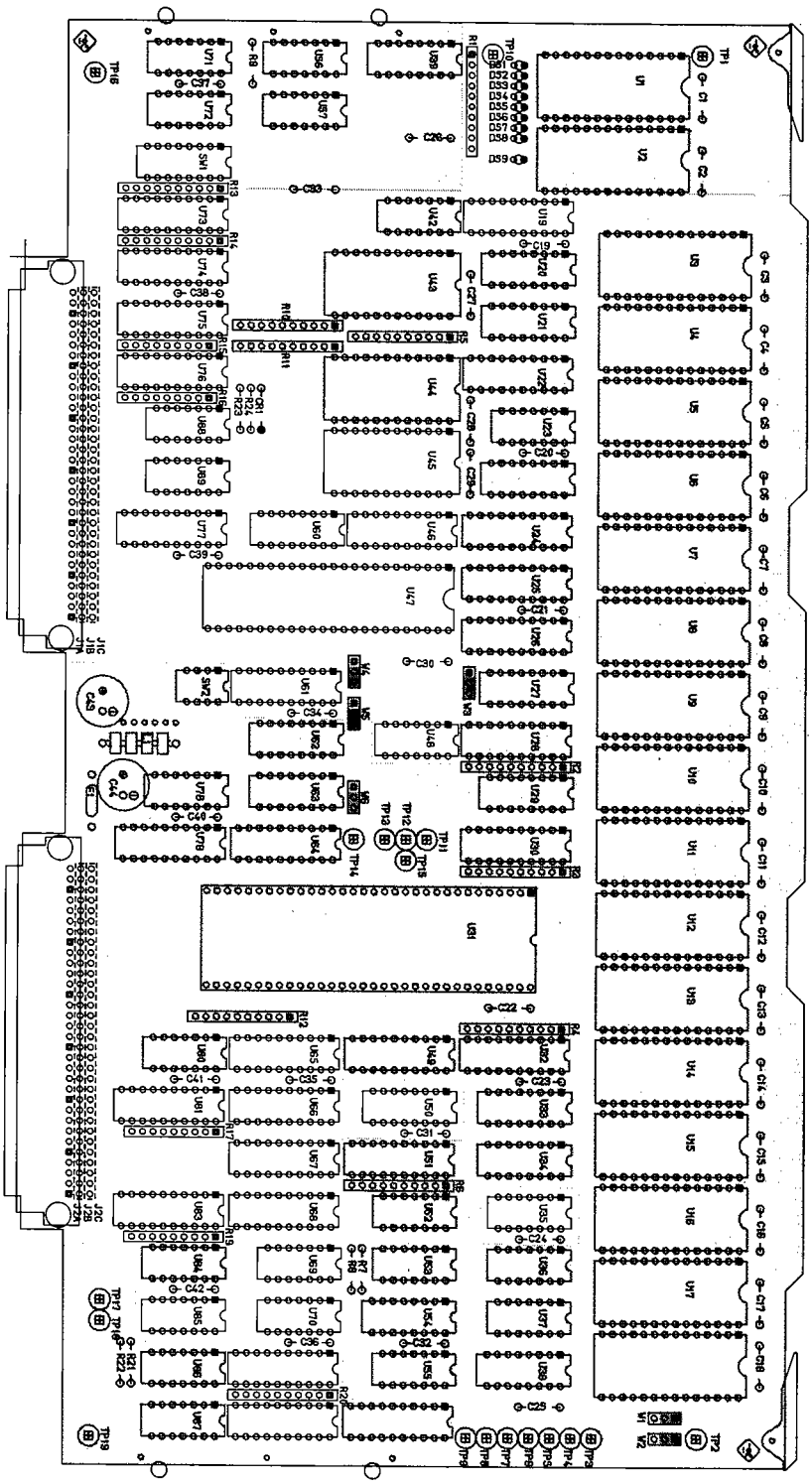

A8 Measurement Control Processor Component Locations

A8 MEASUREMENT CONTROL PROCESSOR 2 of 3

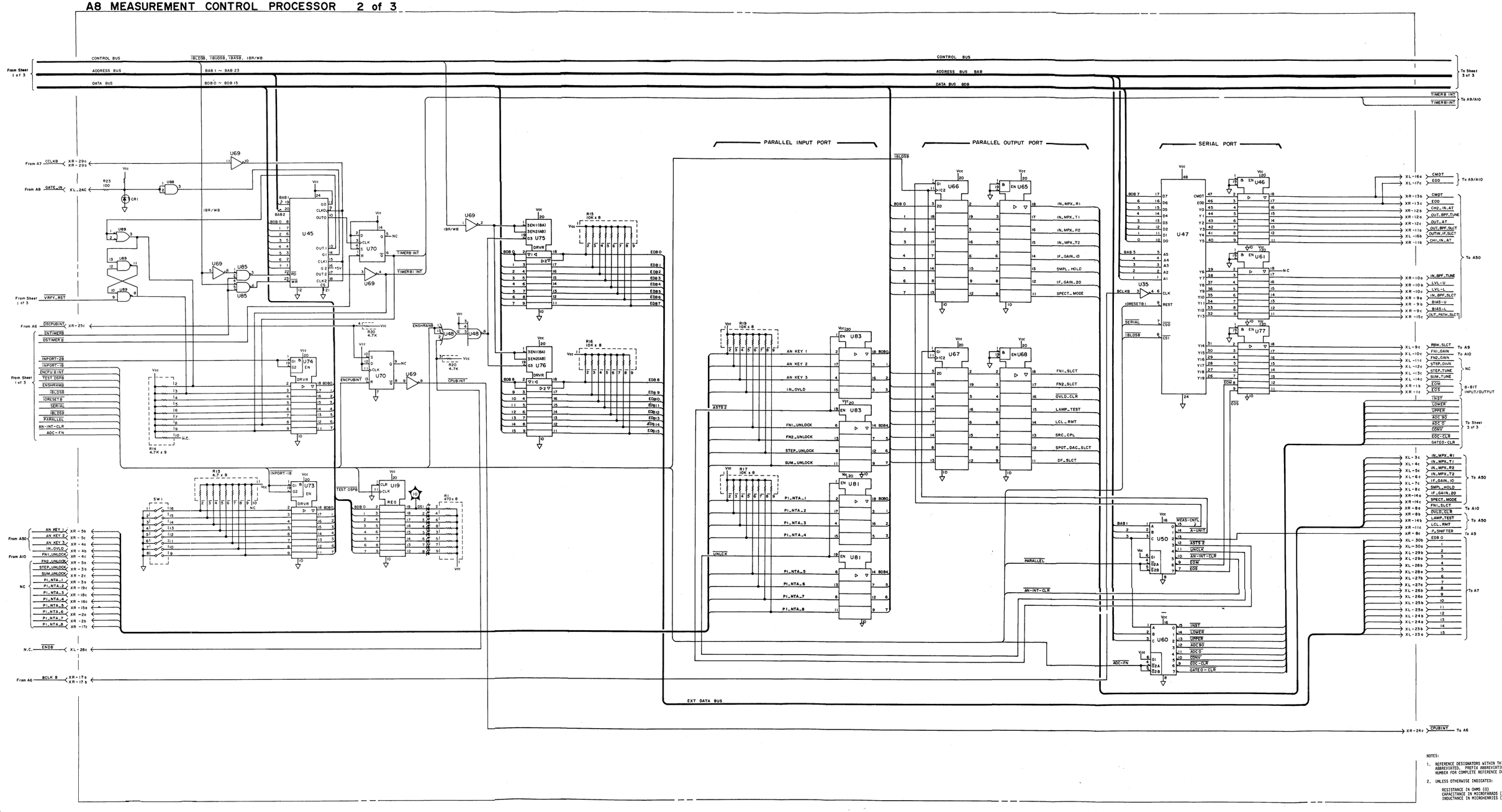

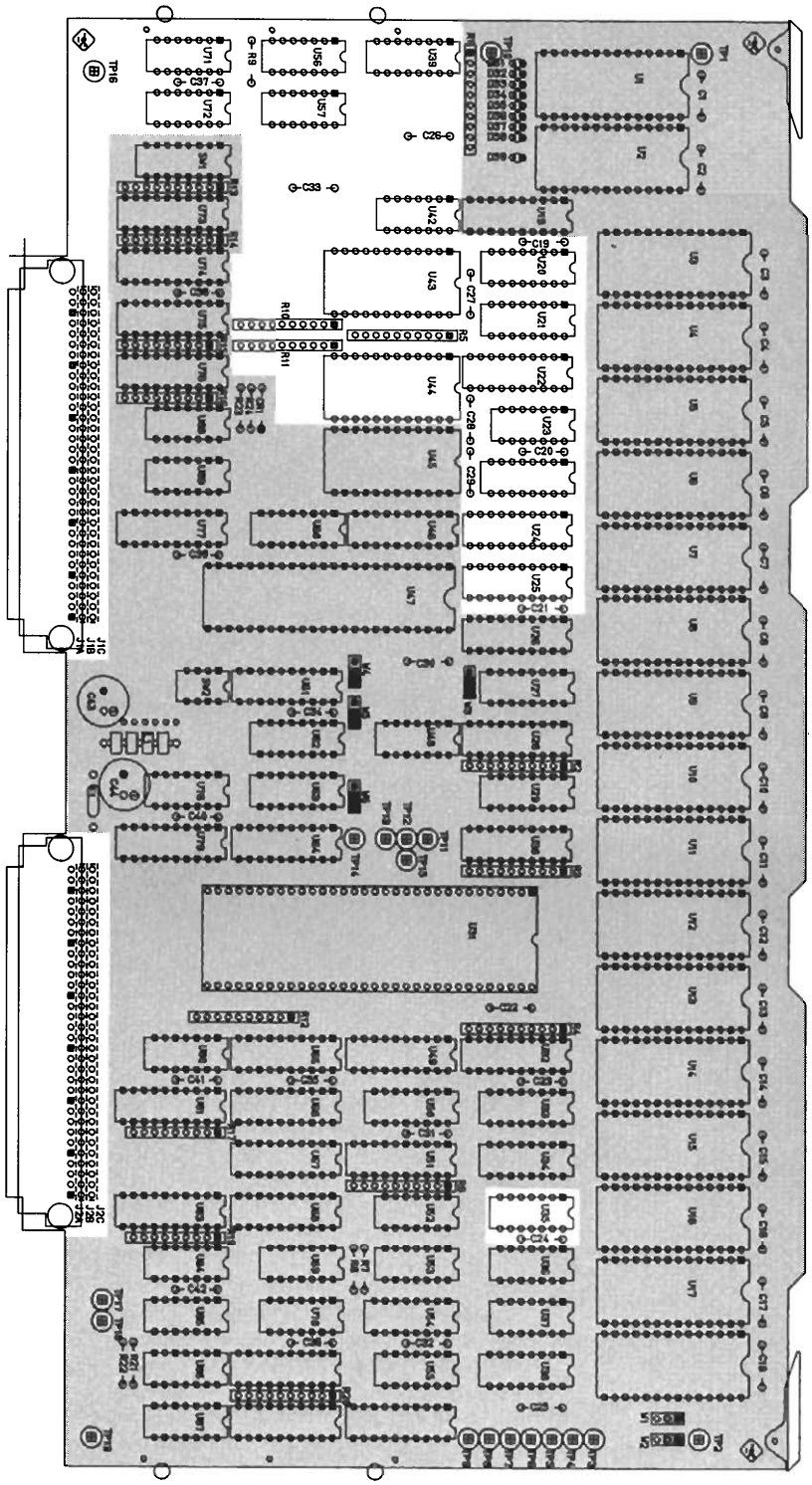

A8 Measurement Control Processor Component Locations

A8 MEASUREMENT CONTROL PROCESSOR 3 of 3

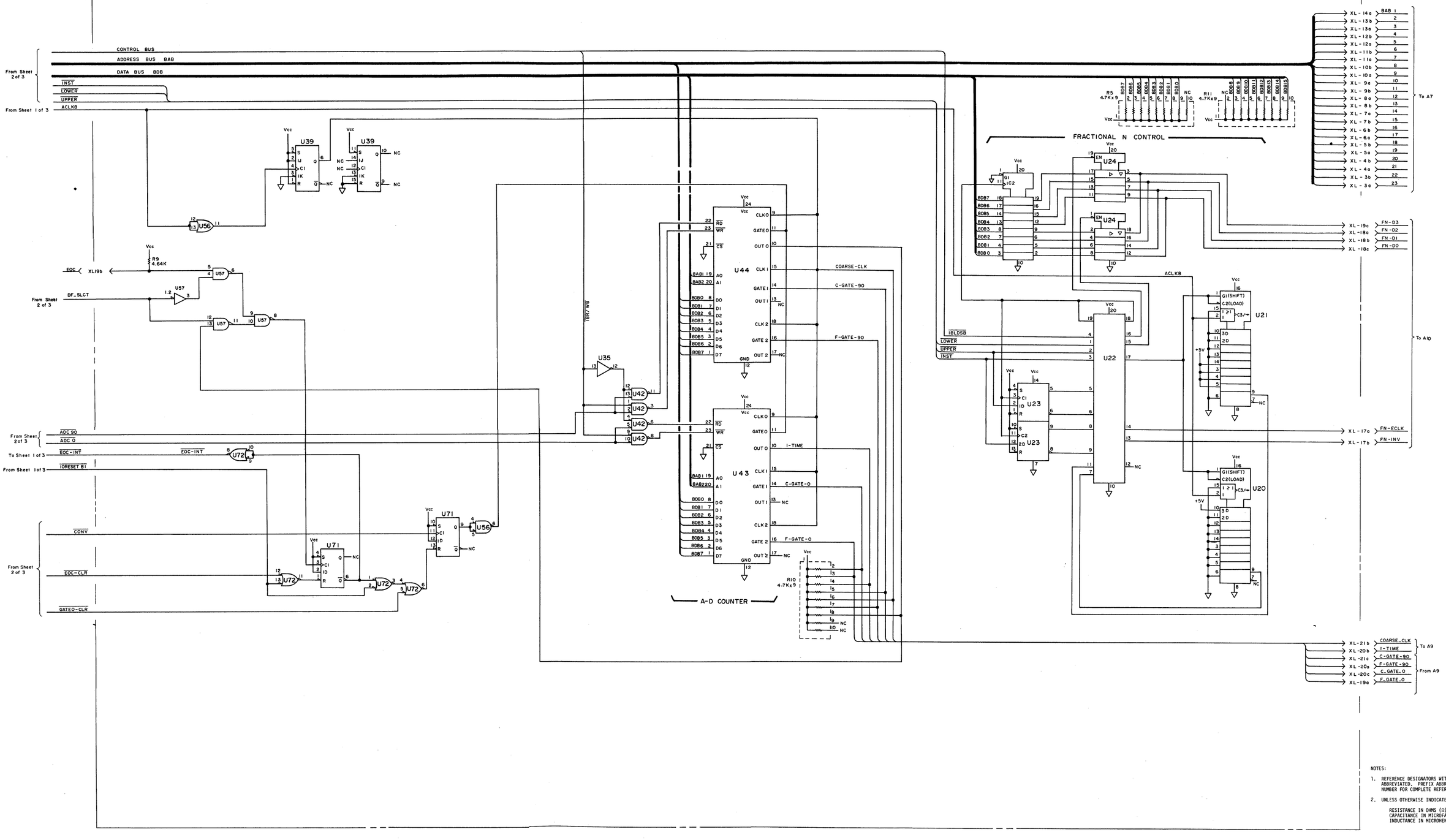

NOTES:

1. REFERENCE DESIGNATORS WITHIN THIS ASSEMBLY ARE ABBREVIATED. PREFIX ABBREVIATION WITH ASSEMBLY NUMBER FOR COMPLETE REFERENCE DESIGNATOR.

2. UNLESS OTHERWISE INDICATED:

   RESISTANCE IN OHMS (Ω)
   CAPACITANCE IN MICROFARADS (μF)
   INDUCTANCE IN MICROHENRIES (μH)

PHASE DETECTOR / A - D CONVERTER SERVICE SHEET

The A9 Phase Detector/A-D Converter board detects the 0° and 90° components of the IF input signal from the Measurement Unit, and outputs the A-D counter control signals to the A8 board.

CIRCUIT DESCRIPTION:

Figure 1 shows the block diagram of the A9 Phase Detector/A-D Converter board. The A9 board contains a phase detector, RBW filter, sample and hold circuit (S/H), and a separate A-D converter for the 0° and 90° components of the IF input signal. This makes it be possible to simultaneously detect and digitize the 0° and 90° components of the vector voltage.

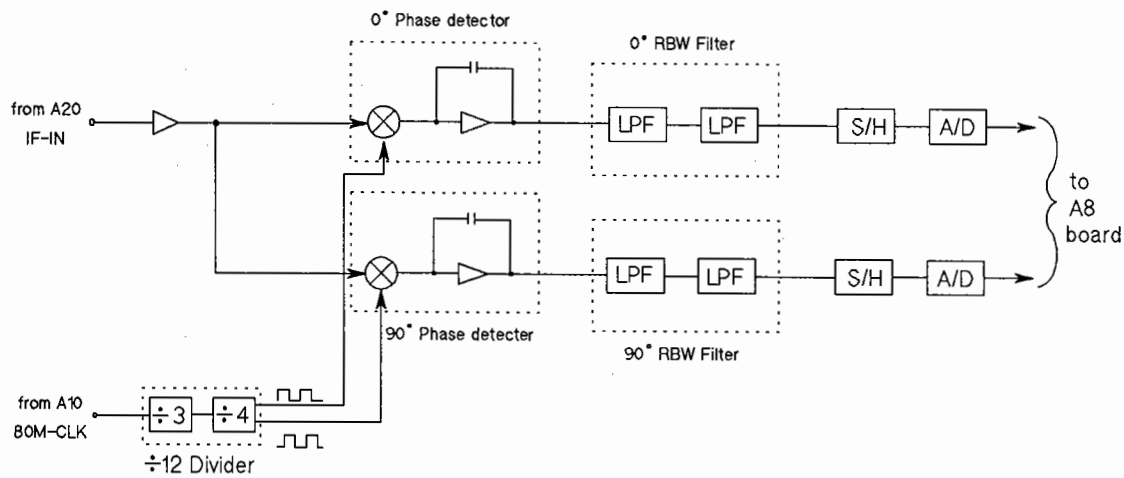

Figure 1. Phase Detector/A-D Converter Board Block Diagram

Voltage Regulators: (U21, U26 to U28)

The Voltage Regulators regulate the unregulated voltage from the A3 board; +7 V, ±16 V, and -51 V to +5 V, ±12 V, and -20 V.

÷12 Divider: (U22, U24, U25)

The ÷12 divider, consisting of a cascaded ÷3 and ÷4 dividers, divides the 80M-CLK signal from the A10 board by 12, and applies the resulting 6.67 MHz signal to the 0° and 90° phase detectors. U25A and U25B respectively drive the 90° and 0° phase detectors. There is a 90° phase difference between the outputs of U25A and U25B.

Phase Detectors: (Q21, Q23, CR18, Q46, Q48, CR35)

The 0° phase detector detects the inphase component of the IF-IN signal from the A20 board, by mixing the IF-IN signal with the 0° phase ÷4 divider output signal (6.67 MHz). The 90° phase detector detects the 90° phase component by mixing the IF-IN signal with the 90° phase component ÷4 divider output signal (6.67 MHz). The 0° phase detector includes adjustable resistors R58 and R75 to adjust the magnitude tracking and phase tracking of the 0° to 90° phase components.

The IF-IN signal is 6.67 MHz if the frequency of the input signal is equal to the measurement point frequency. So the phase detector outputs a dc signal. When a frequency difference exists between the measurement frequency and the input frequency, the IF-IN signal will not be 6.67 MHz. the phase detector output signal's frequency will be (IF-IN)-6.67 MHz (ex, if IF-IN is 6.77 MHz, the I/V converter will apply an 0.1 MHz signal), as shown in Figure 2.

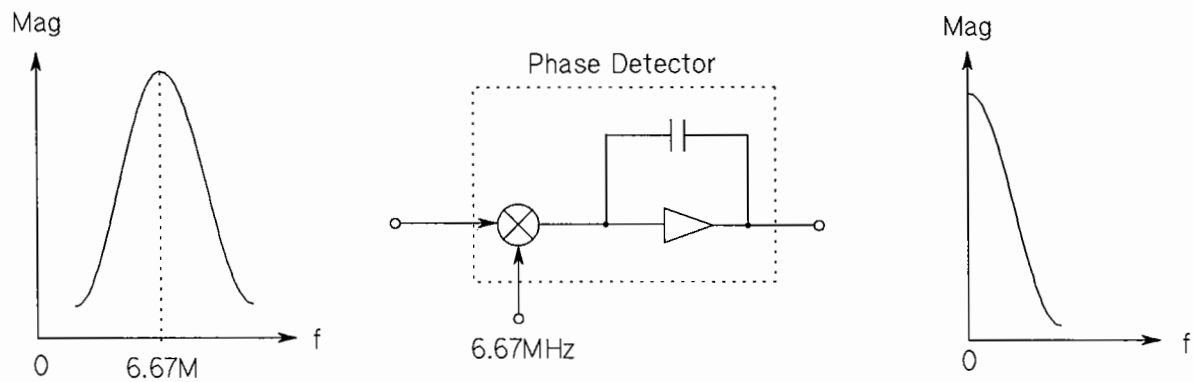

Figure 2. Phase Detector Operation Example

RBW Filters:

The RBW Low Pass Filters are used to filter the phase detector output signal. Each RBW filter consists of LPFs connected in series with the phase detector output, as shown in Figure 3. The LPF can operate as a RBW filter because the frequency of the RBW filter input signal is equal to the frequency difference between the measurement point frequency and the measured input frequency. The LPF 3 dB cut-off frequency is one half the value of the RBW setting value (ex: when RBW is 100 kHz, the cut-off frequency is 50 kHz).

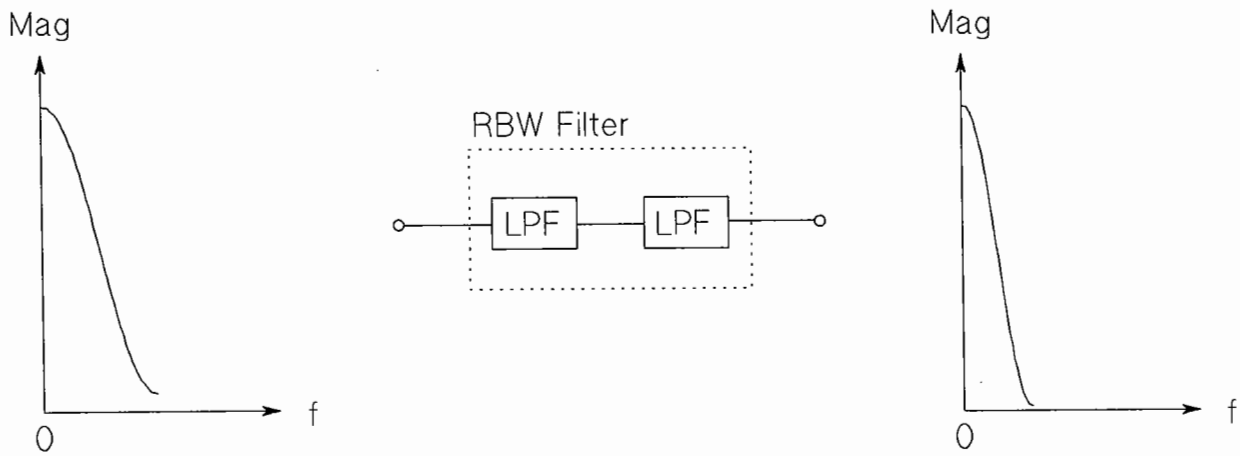

Figure 3. RBW Filter

The RBW filters' value is selected by control signals **a**, **b**, **c**, and **d** (see Schematic Diagram) as shown in Table 1. These control signals are used to change the circuit time constants (R and C values) of the Low Pass Filter by turning transistors (Q4 to Q19, Q29 to Q44) on/off. For example, if RBW is set to 10 kHz, the control signals are set to 0 (low), turning off all transistors thereby setting the RBW filter (LPF) cut-off frequency to 5 kHz. Table 2 lists the control signals and the transistors they control.

Table 1. RBW Filter (LPF) Cut-off Frequency

RBW	a b c d	RBW Filter (LPF) Cut-Off Frequency
3, 10, 30, 100 Hz	1 0 0 0	50 Hz
300 Hz	1 0 0 1	150 Hz
1 kHz	1 0 1 0	500 Hz
3 kHz	1 1 0 0	1.5 kHz
10 kHz	0 0 0 0	5 kHz
30 kHz	0 0 0 1	15 kHz
100 kHz	0 0 1 0	50 kHz
300 kHz	0 1 0 0	150 kHz

1 (on): HIGH +12 V
0 (off): LOW -6 V (for Q4, Q11, Q12, Q19, Q29, Q36, Q37, Q44)
-19 V (for Q5 to Q10, Q13 to Q18, Q30 to Q35, Q38 to Q43)

Table 2. Control Signal and Switching Transistor

Control Signal	Transistors Controlled
a	Q4, Q11, Q12, Q19, Q29, Q36, Q37, Q44
b	Q6, Q9, Q14, Q17, Q31, Q34, Q39, Q42
c	Q5, Q8, Q13, Q16, Q30, Q33, Q38, Q41
d	Q7, Q10, Q15, Q18, Q32, Q35, Q40, Q43

NOTE

The available RBW settings are 3 Hz, 10 Hz, 30 Hz, 100 Hz, 300 Hz, 1 kHz, 3 kHz, 10 kHz, 30 kHz, 100 kHz, and 300 kHz. When the RBW is set from 100 Hz to 300 kHz, the RBW filter cut-off frequency is one half of the RBW setting. When the RBW is set to 3 Hz, 10 Hz or 30 Hz, the RBW filter cut-off frequency is 50 Hz, and the bandwidth is equivalently narrowed by the calculation using the microprocessor.

Sample and Hold Circuit: (U5, U12)

The Sample and Hold (S/H) circuit holds the instantaneous voltage of the RBW filter output, the S/H's dc output voltage is converted by the A/D converter. Two S/H ICs (U5 and U12) are connected to FETs (Q1 to Q3, Q26 to Q28), capacitors (C13 to C15, C50 to C52), and resistor (R28 or R102), respectively. The capacitors are the storage elements used in the S/H circuits, and in the Low Pass Filter to reduce noise on the RBW filter's output signal. The cut-off frequency of the LPF is dependent on the RBW setting, and is selected by control signals **a**, **b**, and **c** (see Schematic Diagram) which turns the FETs on/off. The relationship between the RBW setting, control signals **a**, **b**, and **c**, and FET on/off states, is listed in Table 3.

Table 3. Drive Signal and RBW Filter Setting

RBW	a b c	FET Condition
3, 10, 30,100, 300 Hz	0 0 1	Q3, Q28 on
1 kHz, 3 kHz	0 1 0	Q2, Q27 on
10 kHz, 30 kHz	1 0 0	Q1, Q26 on
100 kHz, 300 kHz	0 0 0	all off

0 (off): LOW (-19 V)
1 (on): HIGH (+12 V)

Multi-slope A/D Converter: (U1 to U3, CR3, U10, U11, CR20)

The dc output voltage from the Sample and Hold Circuit, proportional to the 0° and 90° vector voltage components, is input to the Multi-slope A-D converter. The simplified circuit diagram of a multi-slope A-D converter is shown in Figure 4. U3 and U11 are HIC (Hybrid IC) A-D converters, each of which consist of an integrator and three comparators. PALs (Programmable Array Logic ICs) U1 and U10 are used to generate the A-D logic control signals. R20 and R95 are current sources used to offset the input signal level by one-half of the full-scale range. This makes it possible to digitize both negative and positive input signals. R26 and R97 are the coarse current sources, and R16 and R93 are the fine current sources. The I-TIME and C-CLK signals originate on the A8 board.

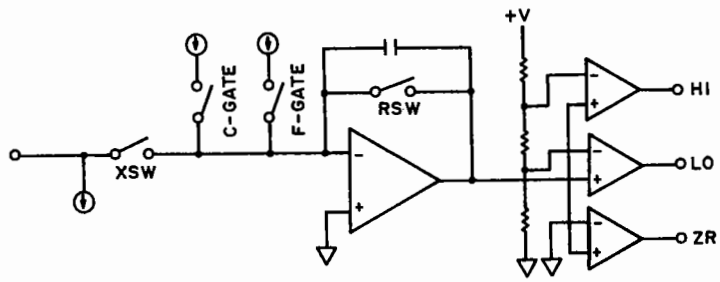

Figure 4. Multi-Slope A-D Converter

I-TIME is a TTL level signal which is asserted LOW during the integration period. C-CLK is a TTL level clock used to synchronize the coarse counter's gate timing. Three comparators are used to detect the level of the integrated dc voltage. The comparator outputs, I-TIME, and C-CLK are the inputs to the PALs which generates the output signals used in the control logic circuit. The HI comparator detects when the integrator output voltage level is greater than '1.2 V. The LO comparator detects when the integrator output voltage level is less than 0.1 V. The ZR comparator detects positive integrator output voltage levels. The coarse to fine source current ratio is 128:1. The period of both the coarse and fine count clocks is 200 ns, so one coarse count is equal to 128 fine counts. The coarse counter is located on the A8 board. The integration time is a constant 500 µs.

TROUBLESHOOTING GUIDE:

1. W5:

Jumper W5 is used to connect the phase detector input to either the A20 output (IF-IN signal) or to GND. This jumper is normally connected to the N-side (to A20's output).

2. W4, W9:

Jumpers W4 and W9 are used to swap the phase detector output connections to the 0° and 90° RBW filters. The jumpers are normally connected to the N-side. If these jumpers are connected to the non-N-side, the 0° and 90° phase detector outputs will be connected to 90° RBW filter input and 0° RBW filter input, respectively.

3. W3, W8:

Jumpers W3 and W8 are used to swap the RBW filter outputs to the 0° and 90° sample and hold (S/H) circuits. The jumpers are normally connected to the N-side. If the jumpers are connected to the non-N-side, 0° RBW filter and 90° RBW filter outputs are connected to the 90° S/H circuit, and to the 0° S/H circuit, respectively.

4. W2, W7:

Jumpers W2 and W7 are used to connect the A-D converter inputs to either the sample and hold circuit output or to -VR. The jumpers are normally connected to the N-side (sample and hold circuit output). If the jumper is connected to the non-N-side, the A-D converter input signal is connected to the full-scale dc input. If the jumper is left open, the A-D converter input is connected to the offset level through R20 or R95.

5. W10:

Jumper W10 is used to connect the ÷12 divider input to the 80 MHz clock or to GND. This jumper is normally connected to the N-side (80M-CLK signal).

6. W1, W6:

Jumpers W1 and W6 are normally connected to the N-side. If the jumper is open, or if the A-D converter zero comparator (part of U3 or U11) is damaged, the ZR signal will not be applied to U1 or U10 and the HP 4195A will hang up. When the jumper is connected to the non-N-side, the ZR signal can be applied and the HP 4195A will perform a measurement although the measurement data will not be valid.

7. Phase Detector Output Waveform:

An example phase detector output waveform is shown below. The magnitude of the waveform depends on the phase difference of the phase detector inputs (IF-IN signal and ÷4 divider output signal). So the magnitude displayed on the oscilloscope may be different even if the equipment settings are the same as those listed below.

(1) Spectrum Configuration:

To generate the following waveform, a BNC(m)-BNC(m) cable must be connected between the Signal Generator REF IN connector and the HP 4195A 10MHz OUTPUT connector, and a N(m)-N(m) cable must be connected between the Signal Generator RF OUTPUT connector and HP 4195A INPUT connector R1.

Setting:

Oscilloscope:

CHAN 1:	500 mV/div
TIME:	1 ms/div
Probe Tip:	
R52 (W4 side lead) for 0°	
R126 (W9 side lead) for 90°	
GND lead:	TP4

Signal Generator:

FREQUENCY:	250.0015 MHz
AMPLITUDE:	0 dBm

HP 4195A:

CONFIG:	SPECTRUM
CENTER:	250 MHz
SPAN:	0 Hz
RBW:	3 kHz
Sweep Mode:	MANUAL

Waveform:

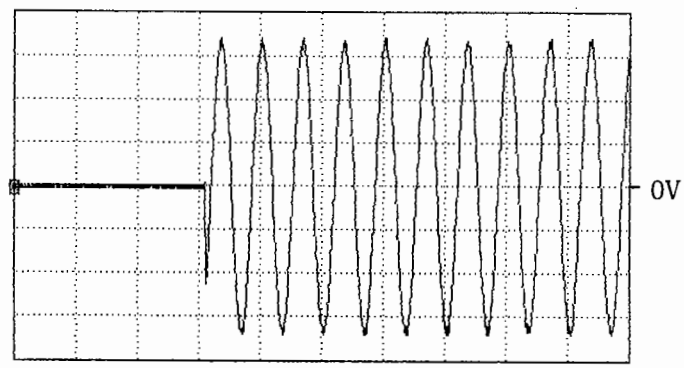

(2) Network Configuration:

To generate the following waveform, a THROUGH condition must be made by using a Power Splitter (Insertion Loss: approximately 6 dB), a N(m)-N(m) Adapter (between Power Splitter INPUT connector and HP 4195A OUTPUT S1 connector), and two N(m)-N(m) cables (between two Power Splitter OUTPUT connectors and HP 4195A INPUT connectors R1 and T1).

Setting:

Oscilloscope:

CHAN 1:	50 mV/div
TIME:	500 µs/div
Probe Tip:	
R52 (W4 side lead) for 0°	
R126 (W9 side lead) for 90°	
GND lead:	TP4

HP 4195A:

CONFIG:	NETWORK
CENTER:	250 MHz
SPAN:	0 Hz
Output Level:	0 dBm
Sweep Mode:	MANUAL

Waveform:

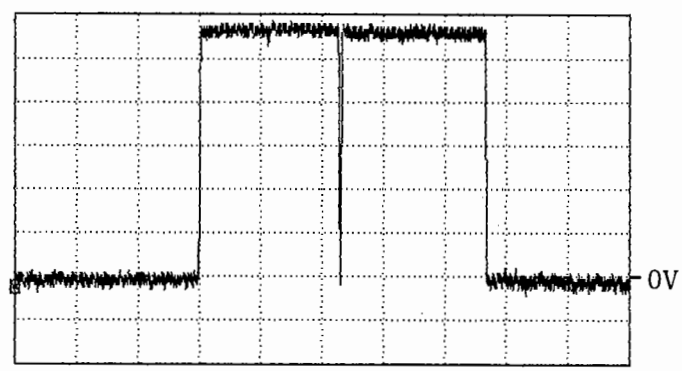

8. RBW Filter Output Waveform:

An example RBW filter output waveform is shown below.

(1) Spectrum Configuration:

To generate the following waveform, a BNC(m)-BNC(m) cable must be connected between the Signal Generator REF IN connector and the HP 4195A's 10MHz OUTPUT connector, and a N(m)-N(m) cable must be connected between the Signal Generator RF OUTPUT connector and HP 4195A INPUT connector R1.

Setting:

Oscilloscope:

CHAN 1:	500 mV/div
TIME:	1 ms/div
Probe Tip:	TP7 for 0°
	TP8 for 90°
GND lead:	TP4

Signal Generator:

FREQUENCY:	250.0015 MHz
AMPLITUDE:	0 dBm

HP 4195A:

CONFIG:	SPECTRUM
CENTER:	250 MHz
SPAN:	0 Hz
RBW:	3 kHz
Sweep Mode:	MANUAL

Waveform:

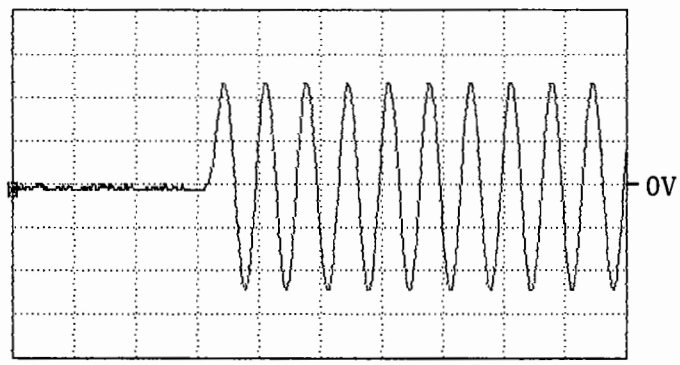

(2) Network Configuration:

To generate the following waveform, a THROUGH condition must be made using a Power Splitter (Insertion Loss: approximately 6 dB), a N(m)-N(m) Adapter (between Power Splitter INPUT connector and HP 4195A OUTPUT S1 connector), and two N(m)-N(m) cables (between two Power Splitter OUTPUT connectors and HP 4195A INPUT connectors R1 and T1).

Setting:

Oscilloscope:

CHAN 1:	50 mV/div
TIME:	500 µs/div
Probe Tip:	TP7 for 0°
	TP8 for 90°
GND lead:	TP4

HP 4195A:

CONFIG:	NETWORK
CENTER:	250 MHz
SPAN:	0 Hz
Output Level:	0 dBm
Sweep Mode:	MANUAL

Waveform:

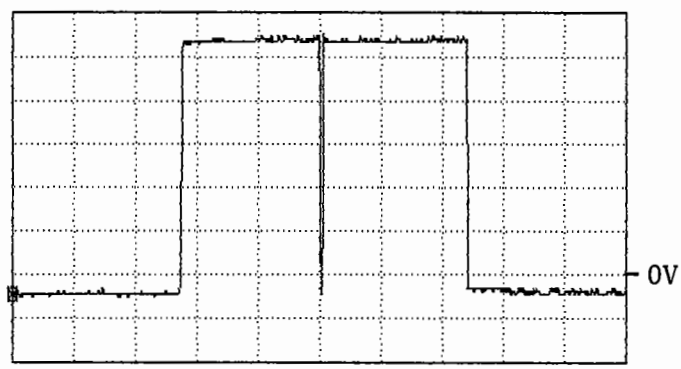

9. Sample and Hold Circuit Output Waveform:

An example of the output waveform from the Sample and Hold circuit is shown below.

(1) Spectrum Configuration:

To generate the following waveform, a BNC(m)-BNC(m) cable must be connected between the Signal Generator REF IN connector and the HP 4195A's 10MHz OUTPUT connector, and a N(m)-N(m) cable must be connected between the Signal Generator RF OUTPUT connector and HP 4195A INPUT connector R1.

Setting:

Oscilloscope:

CHAN 1:	1 V/div
CHAN 2:	2 V/div
TIME:	2 ms/div
Probe Tip (CH 1):	
R23 (W2 side lead) for 0°	
R96 (W7 side lead) for 90°	
Probe Tip (CH 2):	
R100 (U17 side lead)	
GND lead:	TP4

Signal Generator:

FREQUENCY:	250.0015 MHz
AMPLITUDE:	0 dBm

HP 4195A:

CONFIG:	SPECTRUM
CENTER:	250 MHz
SPAN:	0 Hz
RBW:	3 kHz
Sweep Mode:	MANUAL

Waveform:

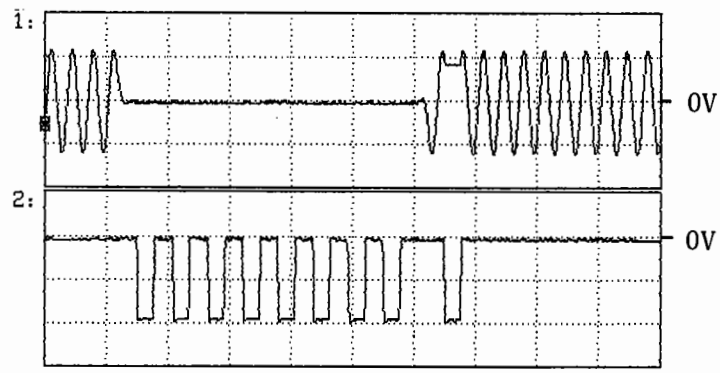

NOTE

The CHAN 2 waveform shows the sampling pulse, the ninth pulse from the left. The other pulses are used for the auto zero measurement.

(2) Network Configuration:

To get the following waveform, the through condition must be made using a Power Splitter (Insertion Loss: approximately 6 dB), a N(m)-N(m) Adapter (between Power Splitter INPUT connector and HP 4195A S1 OUTPUT connector), and two N(m)-N(m) cables (between two Power Splitter OUTPUT connectors and HP 4195A INPUT connectors R1 and T1).

Setting:

Oscilloscope:

CHAN 1:	50 mV/div
TIME:	500 µs/div
Probe Tip:	
R23 (W2 side lead) for 0°	
R96 (W7 side lead) for 90°	
GND lead:	TP4

HP 4195A:

CONFIG:	NETWORK
CENTER:	250 MHz
SPAN:	0 Hz
Output Level:	0 dBm
Sweep Mode:	MANUAL

Waveform:

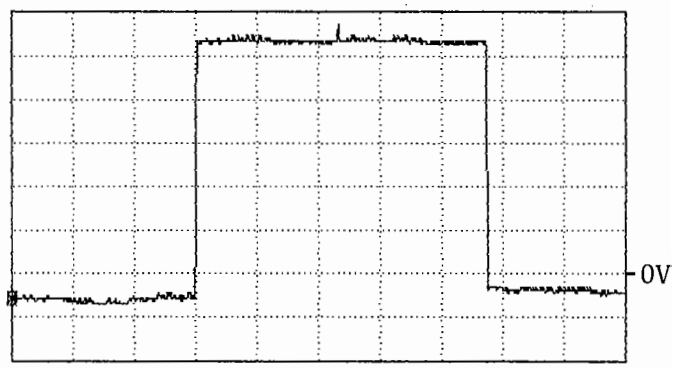

10. A-D Converter Integration Waveform:

An example A-D converter integration waveform is shown below. The following waveform can be seen when the HP 4195A's INPUT is open.

(1) A9J2: Open Condition

The following waveform is generated by opening jumper A9J2.

Setting:

Oscilloscope:

CHAN 1:	500 mV/div
CHAN 2:	2 V/div
TIME:	100 µs/div
Probe Tip (CH 1):	TP5 for 0°
	TP6 for 90°
Probe Tip (CH 2):	TP1
GND lead:	TP4

HP 4195A:

CONFIG:	NETWORK
CENTER:	250 MHz
SPAN:	0 Hz
Sweep Mode:	MANUAL

Waveform:

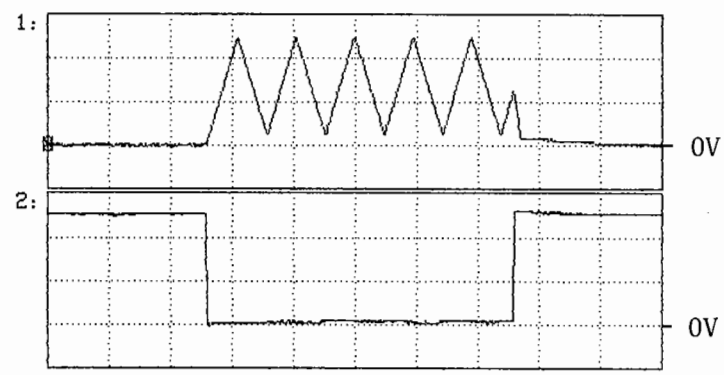

(2) A9J2: Test position

The following waveform is displayed by connecting jumper A9J2 to the test position (connected to the bottom side; the non-N-side).

Setting:

Oscilloscope:

CHAN 1:	2 V/div
CHAN 2:	2 V/div
TIME:	100 µs/div
Probe Tip (CH 1):	TP5 for 0°
	TP6 for 90°
Probe Tip (CH 2):	TP1
GND lead:	TP4

4195A:

CONFIG:	NETWORK
CENTER:	250 MHz
SPAN:	0 Hz
Sweep Mode:	MANUAL

Waveform:

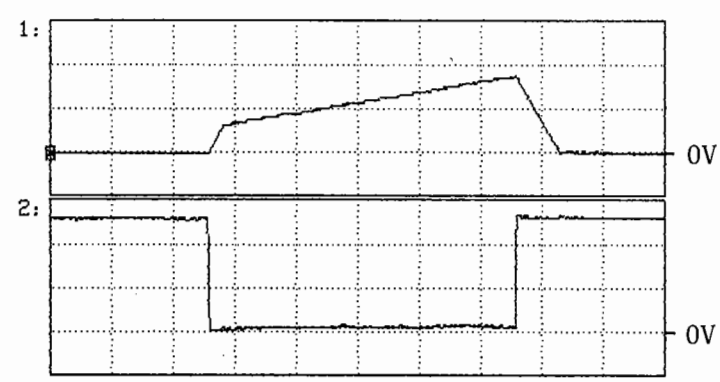

Table 4. A9 Replaceable Parts (1 of 11)

Reference Designator	HP Part Number	C D	Qty.	Description	Mfr Code	Mfr Part Number
A9				PHASE DETECTOR/A-D CONVERTER		
A9	04195-66509	0	1	PSD/AD CONV BD	28480	04195-66509
A9C1	0160-6561	0	56	CAPACITOR-FXD .1UF +-20% 50VDC CER	16299	CAC02Z5U104M050A
A9C2	0160-6561	0		CAPACITOR-FXD .1UF +-20% 50VDC CER	16299	CAC02Z5U104M050A
A9C3	0160-6561	0		CAPACITOR-FXD .1UF +-20% 50VDC CER	16299	CAC02Z5U104M050A
A9C4	0160-6561	0		CAPACITOR-FXD .1UF +-20% 50VDC CER	16299	CAC02Z5U104M050A
A9C5	0160-6561	0		CAPACITOR-FXD .1UF +-20% 50VDC CER	16299	CAC02Z5U104M050A
A9C6	0180-3469	3	10	CAPACITOR-FXD 100UF+-20% 25VDC AL	28480	0180-3469
A9C7	0160-6561	0		CAPACITOR-FXD .1UF +-20% 50VDC CER	16299	CAC02Z5U104M050A
A9C8	0160-6561	0		CAPACITOR-FXD .1UF +-20% 50VDC CER	16299	CAC02Z5U104M050A
A9C9	0160-6341	4	2	CAPACITOR-FXD 0.018U 100V	28480	0160-6341
A9C10	0160-6561	0		CAPACITOR-FXD .1UF +-20% 50VDC CER	16299	CAC02Z5U104M050A
A9C11	0160-6561	0		CAPACITOR-FXD .1UF +-20% 50VDC CER	16299	CAC02Z5U104M050A
A9C12	0160-6561	0		CAPACITOR-FXD .1UF +-20% 50VDC CER	16299	CAC02Z5U104M050A
A9C13	0160-6906	7	2	CAPACITOR-FXD 3400PF +-.25% 50VDC	08452	NQS51H3401C
A9C14	0160-6899	7	4	CAPACITOR-FXD 383PF +-.25% 50VDC POLYSTY	08452	NQS51H3830C
A9C15	0160-6903	4	4	CAPACITOR-FXD .034UF +-.25% 50VDC	08452	NQS81H3402C
A9C16	0160-6904	5	2	CAPACITOR-FXD .0133UF +-.25% 50VDC	08452	NQS61H1332C
A9C17	0160-6900	1	2	CAPACITOR-FXD 105PF +-.25% 50VDC POLYSTY	08452	NQS51H1050C
A9C18	0160-6901	2	2	CAPACITOR-FXD 499PF +-.25% 50VDC POLYSTY	08452	NDQ51H4990C
A9C19	0160-6905	6	2	CAPACITOR-FXD .0464UF +-.25% 50VDC	08452	NQS81H4642C
A9C20	0160-6561	0		CAPACITOR-FXD .1UF +-20% 50VDC CER	16299	CAC02Z5U104M050A
A9C21	0160-6561	0		CAPACITOR-FXD .1UF +-20% 50VDC CER	16299	CAC02Z5U104M050A
A9C22	0160-6561	0		CAPACITOR-FXD .1UF +-20% 50VDC CER	16299	CAC02Z5U104M050A
A9C23	0160-6561	0		CAPACITOR-FXD .1UF +-20% 50VDC CER	16299	CAC02Z5U104M050A
A9C24	0160-6903	4		CAPACITOR-FXD .034UF +-.25% 50VDC	08452	NQS81H3402C
A9C25	0160-6899	7		CAPACITOR-FXD 383PF +-.25% 50VDC POLYSTY	08452	NQS51H3830C
A9C26	0160-6898	6	2	CAPACITOR-FXD 182PF +-.25% 50VDC POLYSTY	08452	NQS51H1820C
A9C27	0160-6902	3	2	CAPACITOR-FXD .0232UF +-.25% 50VDC	08452	NQS61H2322C
A9C28	0160-6561	0		CAPACITOR-FXD .1UF +-20% 50VDC CER	16299	CAC02Z5U104M050A
A9C29	0160-6561	0		CAPACITOR-FXD .1UF +-20% 50VDC CER	16299	CAC02Z5U104M050A
A9C30	0160-4791	4	2	CAPACITOR-FXD 10PF +-5% 100VDC CER 0+-30	28480	0160-4791
A9C31	0160-6561	0		CAPACITOR-FXD .1UF +-20% 50VDC CER	16299	CAC02Z5U104M050A
A9C32	0160-4822	2	5	CAPACITOR-FXD 1000PF +-5% 100VDC CER	28480	0160-4822
A9C33	0160-6561	0		CAPACITOR-FXD .1UF +-20% 50VDC CER	16299	CAC02Z5U104M050A
A9C34	0160-4801	7	8	CAPACITOR-FXD 100PF +-5% 100VDC CER	28480	0160-4801
A9C35	0160-4801	7		CAPACITOR-FXD 100PF +-5% 100VDC CER	28480	0160-4801
A9C36	0160-6561	0		CAPACITOR-FXD .1UF +-20% 50VDC CER	16299	CAC02Z5U104M050A
A9C37	0160-6561	0		CAPACITOR-FXD .1UF +-20% 50VDC CER	16299	CAC02Z5U104M050A
A9C38	0180-3363	6	4	CAPACITOR-FXD 22UF+-20% 25VDC AL	28480	0180-3363
A9C39	0160-6561	0		CAPACITOR-FXD .1UF +-20% 50VDC CER	16299	CAC02Z5U104M050A
A9C40	0160-4795	8	2	CAPACITOR-FXD 4.7PF +-.5PF 100VDC CER	28480	0160-4795
A9C41				NOT ASSIGNED		
A9C42	0160-6561	0		CAPACITOR-FXD .1UF +-20% 50VDC CER	16299	CAC02Z5U104M050A
A9C43	0160-6561	0		CAPACITOR-FXD .1UF +-20% 50VDC CER	16299	CAC02Z5U104M050A
A9C44	0160-6561	0		CAPACITOR-FXD .1UF +-20% 50VDC CER	16299	CAC02Z5U104M050A
A9C45	0160-6561	0		CAPACITOR-FXD .1UF +-20% 50VDC CER	16299	CAC02Z5U104M050A
A9C46	0160-6341	4		CAPACITOR-FXD 0.018U 100V	28480	0160-6341
A9C47	0160-6561	0		CAPACITOR-FXD .1UF +-20% 50VDC CER	16299	CAC02Z5U104M050A
A9C48	0160-6561	0		CAPACITOR-FXD .1UF +-20% 50VDC CER	16299	CAC02Z5U104M050A
A9C49	0160-6561	0		CAPACITOR-FXD .1UF +-20% 50VDC CER	16299	CAC02Z5U104M050A
A9C50	0160-6906	7		CAPACITOR-FXD 3400PF +-.25% 50VDC	08452	NQS51H3401C
A9C51	0160-6899	7		CAPACITOR-FXD 383PF +-.25% 50VDC POLYSTY	08452	NQS51H3830C
A9C52	0160-6903	4		CAPACITOR-FXD .034UF +-.25% 50VDC	08452	NQS81H3402C

*** Indicates factory selected value.**

Table 4. A9 Replaceable Parts (2 of 11)

Reference Designator	HP Part Number	C D	Qty.	Description	Mfr Code	Mfr Part Number
A9C53	0160-6904	5		CAPACITOR-FXD .0133UF +-.25% 50VDC	08452	NQS61H1332C
A9C54	0160-6900	1		CAPACITOR-FXD 105PF +-.25% 50VDC POLYSTY	08452	NQS51H1050C
A9C55	0160-6901	2		CAPACITOR-FXD 499PF +-.25% 50VDC POLYSTY	08452	NDQ51H4990C
A9C56	0160-6905	6		CAPACITOR-FXD .0464UF +-.25% 50VDC	08452	NQS81H4642C
A9C57	0160-6561	0		CAPACITOR-FXD .1UF +-20% 50VDC CER	16299	CAC02Z5U104M050A
A9C58	0160-6561	0		CAPACITOR-FXD .1UF +-20% 50VDC CER	16299	CAC02Z5U104M050A
A9C59	0160-6561	0		CAPACITOR-FXD .1UF +-20% 50VDC CER	16299	CAC02Z5U104M050A
A9C60	0160-6561	0		CAPACITOR-FXD .1UF +-20% 50VDC CER	16299	CAC02Z5U104M050A
A9C61	0160-6903	4		CAPACITOR-FXD .034UF +-.25% 50VDC	08452	NQS81H3402C
A9C62	0160-6899	7		CAPACITOR-FXD 383PF +-.25% 50VDC POLYSTY	08452	NQS51H3830C
A9C63	0160-6898	6		CAPACITOR-FXD 182PF +-.25% 50VDC POLYSTY	08452	NQS51H1820C
A9C64	0160-6902	3		CAPACITOR-FXD .0232UF +-.25% 50VDC	08452	NQS61H2322C
A9C65	0160-6561	0		CAPACITOR-FXD .1UF +-20% 50VDC CER	16299	CAC02Z5U104M050A
A9C66	0160-6561	0		CAPACITOR-FXD .1UF +-20% 50VDC CER	16299	CAC02Z5U104M050A
A9C67	0160-4791	4		CAPACITOR-FXD 10PF +-5% 100VDC CER 0+-30	28480	0160-4791
A9C68	0160-6561	0		CAPACITOR-FXD .1UF +-20% 50VDC CER	16299	CAC02Z5U104M050A
A9C69	0160-4822	2		CAPACITOR-FXD 1000PF +-5% 100VDC CER	28480	0160-4822
A9C70	0160-6561	0		CAPACITOR-FXD .1UF +-20% 50VDC CER	16299	CAC02Z5U104M050A
A9C71	0160-4801	7		CAPACITOR-FXD 100PF +-5% 100VDC CER	28480	0160-4801
A9C72	0160-4801	7		CAPACITOR-FXD 100PF +-5% 100VDC CER	28480	0160-4801
A9C73	0160-6561	0		CAPACITOR-FXD .1UF +-20% 50VDC CER	16299	CAC02Z5U104M050A
A9C74	0160-6561	0		CAPACITOR-FXD .1UF +-20% 50VDC CER	16299	CAC02Z5U104M050A
A9C75	0180-3363	6		CAPACITOR-FXD 22UF+-20% 25VDC AL	28480	0180-3363
A9C76	0160-6561	0		CAPACITOR-FXD .1UF +-20% 50VDC CER	16299	CAC02Z5U104M050A
A9C77	0160-4795	8		CAPACITOR-FXD 4.7PF +-.5PF 100VDC CER	28480	0160-4795
A9C78	0160-6561	0		CAPACITOR-FXD .1UF +-20% 50VDC CER	16299	CAC02Z5U104M050A
A9C79	0180-3363	6		CAPACITOR-FXD 22UF+-20% 25VDC AL	28480	0180-3363
A9C80	0160-4822	2		CAPACITOR-FXD 1000PF +-5% 100VDC CER	28480	0160-4822
A9C81	0160-6561	0		CAPACITOR-FXD .1UF +-20% 50VDC CER	16299	CAC02Z5U104M050A
A9C82	0160-6561	0		CAPACITOR-FXD .1UF +-20% 50VDC CER	16299	CAC02Z5U104M050A
A9C83	0160-6561	0		CAPACITOR-FXD .1UF +-20% 50VDC CER	16299	CAC02Z5U104M050A
A9C84	0160-6561	0		CAPACITOR-FXD .1UF +-20% 50VDC CER	16299	CAC02Z5U104M050A
A9C85	0160-6561	0		CAPACITOR-FXD .1UF +-20% 50VDC CER	16299	CAC02Z5U104M050A
A9C86	0160-6561	0		CAPACITOR-FXD .1UF +-20% 50VDC CER	16299	CAC02Z5U104M050A
A9C87	0160-6561	0		CAPACITOR-FXD .1UF +-20% 50VDC CER	16299	CAC02Z5U104M050A
A9C88	0180-3603	7	1	CAPACITOR-FXD 10UF+-20% 100VDC AL	28480	0180-3603
A9C89	0160-6561	0		CAPACITOR-FXD .1UF +-20% 50VDC CER	16299	CAC02Z5U104M050A
A9C90	0160-6561	0		CAPACITOR-FXD .1UF +-20% 50VDC CER	16299	CAC02Z5U104M050A
A9C91	0180-3468	2	1	CAPACITOR-FXD 47UF+-20% 50VDC AL	28480	0180-3468
A9C92	0160-6561	0		CAPACITOR-FXD .1UF +-20% 50VDC CER	16299	CAC02Z5U104M050A
A9C93	0160-6561	0		CAPACITOR-FXD .1UF +-20% 50VDC CER	16299	CAC02Z5U104M050A
A9C94	0160-6561	0		CAPACITOR-FXD .1UF +-20% 50VDC CER	16299	CAC02Z5U104M050A
A9C95	0160-6561	0		CAPACITOR-FXD .1UF +-20% 50VDC CER	16299	CAC02Z5U104M050A
A9C96	0160-6561	0		CAPACITOR-FXD .1UF +-20% 50VDC CER	16299	CAC02Z5U104M050A
A9C97	0160-6561	0		CAPACITOR-FXD .1UF +-20% 50VDC CER	16299	CAC02Z5U104M050A
A9C98	0160-6561	0		CAPACITOR-FXD .1UF +-20% 50VDC CER	16299	CAC02Z5U104M050A
A9C99	0180-3363	6		CAPACITOR-FXD 22UF+-20% 25VDC AL	28480	0180-3363
A9C100	0180-3469	3		CAPACITOR-FXD 100UF+-20% 25VDC AL	28480	0180-3469
A9C101	0180-3469	3		CAPACITOR-FXD 100UF+-20% 25VDC AL	28480	0180-3469
A9C102	0180-3469	3		CAPACITOR-FXD 100UF+-20% 25VDC AL	28480	0180-3469
A9C103	0180-3469	3		CAPACITOR-FXD 100UF+-20% 25VDC AL	28480	0180-3469
A9C104	0180-3469	3		CAPACITOR-FXD 100UF+-20% 25VDC AL	28480	0180-3469
A9C105	0180-3469	3		CAPACITOR-FXD 100UF+-20% 25VDC AL	28480	0180-3469

*** Indicates factory selected value.**

Table 4. A9 Replaceable Parts (3 of 11)

Reference Designator	HP Part Number	C D	Qty.	Description	Mfr Code	Mfr Part Number
A9C106	0180-3469	3		CAPACITOR-FXD 100UF+-20% 25VDC AL	28480	0180-3469
A9C107	0180-3469	3		CAPACITOR-FXD 100UF+-20% 25VDC AL	28480	0180-3469
A9C108	0180-3469	3		CAPACITOR-FXD 100UF+-20% 25VDC AL	28480	0180-3469
A9C109-A9C200				NOT ASSIGNED		
A9C201	0160-4822	2		CAPACITOR-FXD 1000PF +-5% 100VDC CER	28480	0160-4822
A9C202	0160-4822	2		CAPACITOR-FXD 1000PF +-5% 100VDC CER	28480	0160-4822
A9C203	0160-4801	7		CAPACITOR-FXD 100PF +-5% 100VDC CER	28480	0160-4801
A9C204	0160-4801	7		CAPACITOR-FXD 100PF +-5% 100VDC CER	28480	0160-4801
A9C205	0160-4801	7		CAPACITOR-FXD 100PF +-5% 100VDC CER	28480	0160-4801
A9C206	0160-4801	7		CAPACITOR-FXD 100PF +-5% 100VDC CER	28480	0160-4801
A9C207	0160-4807	3	2	CAPACITOR-FXD 33PF +-5% 100VDC CER 0+-30	28480	0160-4807
A9C208	0160-4807	3		CAPACITOR-FXD 33PF +-5% 100VDC CER 0+-30	28480	0160-4807
A9C209	0160-4803	9	1	CAPACITOR-FXD 68PF +-5% 100VDC CER 0+-30	28480	0160-4803
A9C210	0160-4802	8		CAPACITOR-FXD 82PF +-5% 100VDC CER 0+-30	28480	0160-4802
A9C211	0160-4806	2	1	CAPACITOR-FXD 39PF +-5% 100VDC CER 0+-30	28480	0160-4806
A9C212	0160-4794	7	2	CAPACITOR-FXD 5.6PF +-.5PF 100VDC CER	28480	0160-4794
A9C213	0160-4787	8	1	CAPACITOR-FXD 22PF +-5% 100VDC CER 0+-30	28480	0160-4787
A9CR1	1902-0071	0	1	DIODE-ZNR 9V 5% DO-14 PD=.4W TC=+.001%	28480	1902-0071
A9CR2	1901-0040	1	4	DIODE-SWITCHING 30V 50MA 2NS DO-35	9N171	1N4148
A9CR3	1901-1011	8	4	DIODE-ARRAY 25MA VF DIFF=5MV	28480	1901-1011
A9CR4	1901-0040	1		DIODE-SWITCHING 30V 50MA 2NS DO-35	9N171	1N4148
A9CR5	1901-0050	3	26	DIODE-SWITCHING 80V 200MA 2NS DO-35	9N171	1N4150
A9CR6	1901-0050	3		DIODE-SWITCHING 80V 200MA 2NS DO-35	9N171	1N4150
A9CR7	1901-0050	3		DIODE-SWITCHING 80V 200MA 2NS DO-35	9N171	1N4150
A9CR8	1901-0050	3		DIODE-SWITCHING 80V 200MA 2NS DO-35	9N171	1N4150
A9CR9	1901-0050	3		DIODE-SWITCHING 80V 200MA 2NS DO-35	9N171	1N4150
A9CR10	1901-0050	3		DIODE-SWITCHING 80V 200MA 2NS DO-35	9N171	1N4150
A9CR11	1901-0050	3		DIODE-SWITCHING 80V 200MA 2NS DO-35	9N171	1N4150
A9CR12	1901-0050	3		DIODE-SWITCHING 80V 200MA 2NS DO-35	9N171	1N4150
A9CR13	1901-0050	3		DIODE-SWITCHING 80V 200MA 2NS DO-35	9N171	1N4150
A9CR14	1901-0050	3		DIODE-SWITCHING 80V 200MA 2NS DO-35	9N171	1N4150
A9CR15	1901-0050	3		DIODE-SWITCHING 80V 200MA 2NS DO-35	9N171	1N4150
A9CR16	1901-0050	3		DIODE-SWITCHING 80V 200MA 2NS DO-35	9N171	1N4150
A9CR17	1901-0050	3		DIODE-SWITCHING 80V 200MA 2NS DO-35	9N171	1N4150
A9CR18	1901-1011	8		DIODE-ARRAY 25MA VF DIFF=5MV	28480	1901-1011
A9CR19	1901-0040	1		DIODE-SWITCHING 30V 50MA 2NS DO-35	9N171	1N4148
A9CR20	1901-1011	8		DIODE-ARRAY 25MA VF DIFF=5MV	28480	1901-1011
A9CR21	1901-0040	1		DIODE-SWITCHING 30V 50MA 2NS DO-35	9N171	1N4148
A9CR22	1901-0050	3		DIODE-SWITCHING 80V 200MA 2NS DO-35	9N171	1N4150
A9CR23	1901-0050	3		DIODE-SWITCHING 80V 200MA 2NS DO-35	9N171	1N4150
A9CR24	1901-0050	3		DIODE-SWITCHING 80V 200MA 2NS DO-35	9N171	1N4150
A9CR25	1901-0050	3		DIODE-SWITCHING 80V 200MA 2NS DO-35	9N171	1N4150
A9CR26	1901-0050	3		DIODE-SWITCHING 80V 200MA 2NS DO-35	9N171	1N4150
A9CR27	1901-0050	3		DIODE-SWITCHING 80V 200MA 2NS DO-35	9N171	1N4150
A9CR28	1901-0050	3		DIODE-SWITCHING 80V 200MA 2NS DO-35	9N171	1N4150
A9CR29	1901-0050	3		DIODE-SWITCHING 80V 200MA 2NS DO-35	9N171	1N4150
A9CR30	1901-0050	3		DIODE-SWITCHING 80V 200MA 2NS DO-35	9N171	1N4150
A9CR31	1901-0050	3		DIODE-SWITCHING 80V 200MA 2NS DO-35	9N171	1N4150
A9CR32	1901-0050	3		DIODE-SWITCHING 80V 200MA 2NS DO-35	9N171	1N4150
A9CR33	1901-0050	3		DIODE-SWITCHING 80V 200MA 2NS DO-35	9N171	1N4150
A9CR34	1901-0050	3		DIODE-SWITCHING 80V 200MA 2NS DO-35	9N171	1N4150
A9CR35	1901-1011	8		DIODE-ARRAY 25MA VF DIFF=5MV	28480	1901-1011

*** Indicates factory selected value.**

Table 4. A9 Replaceable Parts (4 of 11)

Reference Designator	HP Part Number	C D	Qty.	Description	Mfr Code	Mfr Part Number
A9CR36	1902-0953	7	1	DIODE-ZNR 6.2V 5% DO-35 PD=.4W TC=+.053%	28480	1902-0953
A9CR37-A9CR70				NOT ASSIGNED		
A9CR71	1901-0376	6	2	DIODE-GEN-PRP		
A9CR72	1902-0950	4	2	DIODE-ZNR 4.7V 5% DO-35 PD=.4W TC=+.025%	28480	1902-0950
A9CR73	1901-0376	6		DIODE-GEN-PRP		
A9CR74	1902-0950	4		DIODE-ZNR 4.7V 5% DO-35 PD=.4W TC=+.025%	28480	1902-0950
A9J1	1251-4822	6	10	CONN-POST TYPE .100-PIN-SPCG 3-CONT	28480	1251-4822
A9J2	1251-4822	6		CONN-POST TYPE .100-PIN-SPCG 3-CONT	28480	1251-4822
A9J3	1251-4822	6		CONN-POST TYPE .100-PIN-SPCG 3-CONT	28480	1251-4822
A9J4	1251-4822	6		CONN-POST TYPE .100-PIN-SPCG 3-CONT	28480	1251-4822
A9J5	1251-4822	6		CONN-POST TYPE .100-PIN-SPCG 3-CONT	28480	1251-4822
A9J6	1251-4822	6		CONN-POST TYPE .100-PIN-SPCG 3-CONT	28480	1251-4822
A9J7	1251-4822	6		CONN-POST TYPE .100-PIN-SPCG 3-CONT	28480	1251-4822
A9J8	1251-4822	6		CONN-POST TYPE .100-PIN-SPCG 3-CONT	28480	1251-4822
A9J9	1251-4822	6		CONN-POST TYPE .100-PIN-SPCG 3-CONT	28480	1251-4822
A9J10	1252-0720	7	2	CONN-POST TYPE 2.54-PIN-SPCG 96-CONT	28480	1252-0720
A9J11	1251-4822	6		CONN-POST TYPE .100-PIN-SPCG 3-CONT	28480	1251-4822
A9J12	1252-0720	7		CONN-POST TYPE 2.54-PIN-SPCG 96-CONT	28480	1252-0720
A9L1	9100-1629	4	2	INDUCTOR RF-CH-MLD 47UH 5%	28480	9100-1629
A9L2	9100-0539	3	7	INDUCTOR 10UH 5%	28480	9100-0539
A9L3	9100-0539	3		INDUCTOR 10UH 5%	28480	9100-0539
A9L4	9100-0539	3		INDUCTOR 10UH 5%	28480	9100-0539
A9L5	9100-0539	3		INDUCTOR 10UH 5%	28480	9100-0539
A9L6	9100-0539	3		INDUCTOR 10UH 5%	28480	9100-0539
A9L7	9100-1629	4		INDUCTOR RF-CH-MLD 47UH 5%	28480	9100-1629
A9L8	9100-0539	3		INDUCTOR 10UH 5%	28480	9100-0539
A9L9	9100-0539	3		INDUCTOR 10UH 5%	28480	9100-0539
A9L10	9170-1397	0	7	BEAD INDUCTOR	28480	9170-1397
A9L11	9170-1397	0		BEAD INDUCTOR	28480	9170-1397
A9L12				NOT ASSIGNED		
A9L13	9170-1397	0		BEAD INDUCTOR	28480	9170-1397
A9L14	9170-1397	0		BEAD INDUCTOR	28480	9170-1397
A9L15	9170-1397	0		BEAD INDUCTOR	28480	9170-1397
A9L16				NOT ASSIGNED		
A9L17	9170-1397	0		BEAD INDUCTOR	28480	9170-1397
A9L18				NOT ASSIGNED		
A9L19	9170-1397	0		BEAD INDUCTOR	28480	9170-1397
A9L20	9140-1278	3	1	INDUCTOR 68UH 10% 7.5D-MM Q=45	28480	9140-1278
A9L21-A9L80				NOT ASSIGNED		
A9L81	9140-0158	6	2	INDUCTOR RF-CH-MLD 1UH 10%	28480	9140-0158
A9L82	9140-0158	6		INDUCTOR RF-CH-MLD 1UH 10%	28480	9140-0158
A9L83	9140-0261	2	2	INDUCTOR 100NH 5%		
A9L84	9140-0261	2		INDUCTOR 100NH 5%		
A9Q1	1855-0091	3	30	TRANSISTOR J-FET N-CHAN D-MODE SI	28480	1855-0091
A9Q2	1855-0091	3		TRANSISTOR J-FET N-CHAN D-MODE SI	28480	1855-0091
A9Q3	1855-0091	3		TRANSISTOR J-FET N-CHAN D-MODE SI	28480	1855-0091
A9Q4	1854-1074	2	9	TRANSISTOR NPN SI PD=200MW FT=.03HZ	28480	1854-1074
A9Q5	1855-0091	3		TRANSISTOR J-FET N-CHAN D-MODE SI	28480	1855-0091

*** Indicates factory selected value.**

Table 4. A9 Replaceable Parts (5 of 11)

Reference Designator	HP Part Number	C D	Qty.	Description	Mfr Code	Mfr Part Number
A9Q6	1855-0091	3		TRANSISTOR J-FET N-CHAN D-MODE SI	28480	1855-0091
A9Q7	1855-0091	3		TRANSISTOR J-FET N-CHAN D-MODE SI	28480	1855-0091
A9Q8	1855-0091	3		TRANSISTOR J-FET N-CHAN D-MODE SI	28480	1855-0091
A9Q9	1855-0091	3		TRANSISTOR J-FET N-CHAN D-MODE SI	28480	1855-0091
A9Q10	1855-0091	3		TRANSISTOR J-FET N-CHAN D-MODE SI	28480	1855-0091
A9Q11	1854-1074	2		TRANSISTOR NPN SI PD=200MW FT=.03HZ	28480	1854-1074
A9Q12	1854-1074	2		TRANSISTOR NPN SI PD=200MW FT=.03HZ	28480	1854-1074
A9Q13	1855-0091	3		TRANSISTOR J-FET N-CHAN D-MODE SI	28480	1855-0091
A9Q14	1855-0091	3		TRANSISTOR J-FET N-CHAN D-MODE SI	28480	1855-0091
A9Q15	1855-0091	3		TRANSISTOR J-FET N-CHAN D-MODE SI	28480	1855-0091
A9Q16	1855-0091	3		TRANSISTOR J-FET N-CHAN D-MODE SI	28480	1855-0091
A9Q17	1855-0091	3		TRANSISTOR J-FET N-CHAN D-MODE SI	28480	1855-0091
A9Q18	1855-0091	3		TRANSISTOR J-FET N-CHAN D-MODE SI	28480	1855-0091
A9Q19	1854-1074	2		TRANSISTOR NPN SI PD=200MW FT=.03HZ	28480	1854-1074
A9Q20	1855-0213	1	2	TRANSISTOR-JFET DUAL N-CHAN D-MODE TO-78	28480	1855-0213
A9Q21	1854-0247	9	4	TRANSISTOR NPN SI TO-39 PD=1W FT=800MHZ	28480	1854-0247
A9Q22				NOT ASSIGNED		
A9Q23	1854-0247	9		TRANSISTOR NPN SI TO-39 PD=1W FT=800MHZ	28480	1854-0247
A9Q24				NOT ASSIGNED		
A9Q25	1854-0215	1	1	TRANSISTOR NPN SI TO-92 PD=350MW	04713	2N3904
	9170-0029	3	2	CORE-SHIELDING BEAD	28480	9170-0029
A9Q26	1855-0091	3		TRANSISTOR J-FET N-CHAN D-MODE SI	28480	1855-0091
A9Q27	1855-0091	3		TRANSISTOR J-FET N-CHAN D-MODE SI	28480	1855-0091
A9Q28	1855-0091	3		TRANSISTOR J-FET N-CHAN D-MODE SI	28480	1855-0091
A9Q29	1854-1074	2		TRANSISTOR NPN SI PD=200MW FT=.03HZ	28480	1854-1074
A9Q30	1855-0091	3		TRANSISTOR J-FET N-CHAN D-MODE SI	28480	1855-0091
A9Q31	1855-0091	3		TRANSISTOR J-FET N-CHAN D-MODE SI	28480	1855-0091
A9Q32	1855-0091	3		TRANSISTOR J-FET N-CHAN D-MODE SI	28480	1855-0091
A9Q33	1855-0091	3		TRANSISTOR J-FET N-CHAN D-MODE SI	28480	1855-0091
A9Q34	1855-0091	3		TRANSISTOR J-FET N-CHAN D-MODE SI	28480	1855-0091
A9Q35	1855-0091	3		TRANSISTOR J-FET N-CHAN D-MODE SI	28480	1855-0091
A9Q36	1854-1074	2		TRANSISTOR NPN SI PD=200MW FT=.03HZ	28480	1854-1074
A9Q37	1854-1074	2		TRANSISTOR NPN SI PD=200MW FT=.03HZ	28480	1854-1074
A9Q38	1855-0091	3		TRANSISTOR J-FET N-CHAN D-MODE SI	28480	1855-0091
A9Q39	1855-0091	3		TRANSISTOR J-FET N-CHAN D-MODE SI	28480	1855-0091
A9Q40	1855-0091	3		TRANSISTOR J-FET N-CHAN D-MODE SI	28480	1855-0091
A9Q41	1855-0091	3		TRANSISTOR J-FET N-CHAN D-MODE SI	28480	1855-0091
A9Q42	1855-0091	3		TRANSISTOR J-FET N-CHAN D-MODE SI	28480	1855-0091
A9Q43	1855-0091	3		TRANSISTOR J-FET N-CHAN D-MODE SI	28480	1855-0091
A9Q44	1854-1074	2		TRANSISTOR NPN SI PD=200MW FT=.03HZ	28480	1854-1074
A9Q45	1855-0213	1		TRANSISTOR-JFET DUAL N-CHAN D-MODE TO-78	28480	1855-0213
A9Q46	1854-0247	9		TRANSISTOR NPN SI TO-39 PD=1W FT=800MHZ	28480	1854-0247
A9Q47				NOT ASSIGNED		
A9Q48	1854-0247	9		TRANSISTOR NPN SI TO-39 PD=1W FT=800MHZ	28480	1854-0247
A9Q49				NOT ASSIGNED		
A9Q50	1855-0609	9	1	TRANSISTOR J-FET N-CHAN TO-92 SI	28480	1855-0609
	9170-0029	3		CORE-SHIELDING BEAD	28480	9170-0029
A9Q51	1854-1074	2		TRANSISTOR NPN SI PD=200MW FT=.03HZ	28480	1854-1074
A9R1	0757-0442	9	33	RESISTOR 10K 1% .125W F TC=0+-100	24546	CT4-1/8-T0-1002-F
A9R2	0757-0442	9		RESISTOR 10K 1% .125W F TC=0+-100	24546	CT4-1/8-T0-1002-F
A9R3	0757-0442	9		RESISTOR 10K 1% .125W F TC=0+-100	24546	CT4-1/8-T0-1002-F
A9R4	0757-0442	9		RESISTOR 10K 1% .125W F TC=0+-100	24546	CT4-1/8-T0-1002-F
A9R5	0757-0442	9		RESISTOR 10K 1% .125W F TC=0+-100	24546	CT4-1/8-T0-1002-F

*** Indicates factory selected value.**

Table 4. A9 Replaceable Parts (6 of 11)

Reference Designator	HP Part Number	C D	Qty.	Description	Mfr Code	Mfr Part Number
A9R6	0757-0442	9		RESISTOR 10K 1% .125W F TC=0+-100	24546	CT4-1/8-T0-1002-F
A9R7	0757-0442	9		RESISTOR 10K 1% .125W F TC=0+-100	24546	CT4-1/8-T0-1002-F
A9R8	0757-0442	9		RESISTOR 10K 1% .125W F TC=0+-100	24546	CT4-1/8-T0-1002-F
A9R9	0757-0442	9		RESISTOR 10K 1% .125W F TC=0+-100	24546	CT4-1/8-T0-1002-F
A9R10	0757-0438	3	2	RESISTOR 5.11K 1% .125W F TC=0+-100	24546	CT4-1/8-T0-5111-F
A9R11	0757-0438	3		RESISTOR 5.11K 1% .125W F TC=0+-100	24546	CT4-1/8-T0-5111-F
A9R12	0757-0280	3	12	RESISTOR 1K 1% .125W F TC=0+-100	24546	CT4-1/8-T0-1001-F
A9R13	0698-3155	1	10	RESISTOR 4.64K 1% .125W F TC=0+-100	24546	CT4-1/8-T0-4641-F
A9R14	0757-0280	3		RESISTOR 1K 1% .125W F TC=0+-100	24546	CT4-1/8-T0-1001-F
A9R15	0698-3155	1		RESISTOR 4.64K 1% .125W F TC=0+-100	24546	CT4-1/8-T0-4641-F
A9R16	0698-8649	8	2	RESISTOR 1.28M .1% .25W F TC=0+-25	28480	0698-8649
A9R17	0698-3243	8	2	RESISTOR 178K 1% .125W F TC=0+-100	24546	CT4-1/8-T0-1783-F
A9R18	0757-0274	5	3	RESISTOR 1.21K 1% .125W F TC=0+-100	24546	CT4-1/8-T0-1211-F
A9R19	0757-0442	9		RESISTOR 10K 1% .125W F TC=0+-100	24546	CT4-1/8-T0-1002-F
A9R20	0698-3157	3	2	RESISTOR 19.6K 1% .125W F TC=0+-100	24546	CT4-1/8-T0-1962-F
A9R21	0757-0280	3		RESISTOR 1K 1% .125W F TC=0+-100	24546	CT4-1/8-T0-1001-F
A9R22	0698-3447	4	2	RESISTOR 422 1% .125W F TC=0+-100	24546	CT4-1/8-T0-422R-F
A9R23	0757-0200	7	2	RESISTOR 5.62K 1% .125W F TC=0+-100	24546	CT4-1/8-T0-5621-F
A9R24	0757-0443	0	2	RESISTOR 11K 1% .125W F TC=0+-100	24546	CT4-1/8-T0-1102-F
A9R25	0698-3155	1		RESISTOR 4.64K 1% .125W F TC=0+-100	24546	CT4-1/8-T0-4641-F
A9R26	0698-6360	6	2	RESISTOR 10K .1% .125W F TC=0+-25	28480	0698-6360
A9R27	0698-3155	1		RESISTOR 4.64K 1% .125W F TC=0+-100	24546	CT4-1/8-T0-4641-F
A9R28	0757-0278	9	3	RESISTOR 1.78K 1% .125W F TC=0+-100	24546	CT4-1/8-T0-1781-F
A9R29	0757-0465	6	23	RESISTOR 100K 1% .125W F TC=0+-100	24546	CT4-1/8-T0-1003-F
A9R30	0757-0465	6		RESISTOR 100K 1% .125W F TC=0+-100	24546	CT4-1/8-T0-1003-F
A9R31	0757-0465	6		RESISTOR 100K 1% .125W F TC=0+-100	24546	CT4-1/8-T0-1003-F
A9R32	0699-2342	8	4	RESISTOR 1.527K .1% .125W TF TC=0+-50	07953	RN14C281.527K OHM B
A9R33	0699-2344	0	4	RESISTOR 5K .1% .125W TF TC=0+-50	07953	RN14C285K OHM B
A9R34	0699-2341	7	4	RESISTOR 45K .1% .125W TF TC=0+-50	07953	RN14C2B45K OHM B
A9R35	0699-2339	3	4	RESISTOR 22.5K .1% .125W TF TC=0+-50	07953	RN14C2B22.5K OHM B
A9R36	0699-2343	9	4	RESISTOR 15K .1% .125W TF TC=0+-50	07953	RN14C2B15K OHM B
A9R37	0699-2337	1	4	RESISTOR 4.63K .1% .125W TF TC=0+-50	07953	RN14C2B4.63K OHM B
A9R38	0699-2338	2	4	RESISTOR 67.5K .1% .125W TF TC=0+-50	07953	RN14C2B67.5K OHM B
A9R39	0699-2340	6	4	RESISTOR 135K .1% .125W TF TC=0+-50	07953	RN14C2B135K OHM B
A9R40	0757-0442	9		RESISTOR 10K 1% .125W F TC=0+-100	24546	CT4-1/8-T0-1002-F
A9R41	0757-0442	9		RESISTOR 10K 1% .125W F TC=0+-100	24546	CT4-1/8-T0-1002-F
A9R42	0757-0199	3	12	RESISTOR 21.5K 1% .125W F TC=0+-100	24546	CT4-1/8-T0-2152-F
A9R43	0757-0199	3		RESISTOR 21.5K 1% .125W F TC=0+-100	24546	CT4-1/8-T0-2152-F
A9R44	0757-0199	3		RESISTOR 21.5K 1% .125W F TC=0+-100	24546	CT4-1/8-T0-2152-F
A9R45	0757-0442	9		RESISTOR 10K 1% .125W F TC=0+-100	24546	CT4-1/8-T0-1002-F
A9R46	0757-0442	9		RESISTOR 10K 1% .125W F TC=0+-100	24546	CT4-1/8-T0-1002-F
A9R47	0757-0199	3		RESISTOR 21.5K 1% .125W F TC=0+-100	24546	CT4-1/8-T0-2152-F
A9R48	0757-0199	3		RESISTOR 21.5K 1% .125W F TC=0+-100	24546	CT4-1/8-T0-2152-F
A9R49	0757-0199	3		RESISTOR 21.5K 1% .125W F TC=0+-100	24546	CT4-1/8-T0-2152-F
A9R50	0699-2337	1		RESISTOR 4.63K .1% .125W TF TC=0+-50	07953	RN14C2B4.63K OHM B
A9R51	0699-2343	9		RESISTOR 15K .1% .125W TF TC=0+-50	07953	RN14C2B15K OHM B
A9R52	0699-2338	2		RESISTOR 67.5K .1% .125W TF TC=0+-50	07953	RN14C2B67.5K OHM B
A9R53	0699-2340	6		RESISTOR 135K .1% .125W TF TC=0+-50	07953	RN14C2B135K OHM B
A9R54	0699-2342	8		RESISTOR 1.527K .1% .125W TF TC=0+-50	07953	RN14C281.527K OHM B
A9R55	0699-2344	0		RESISTOR 5K .1% .125W TF TC=0+-50	07953	RN14C285K OHM B
A9R56	0699-2339	3		RESISTOR 22.5K .1% .125W TF TC=0+-50	07953	RN14C2B22.5K OHM B
A9R57	0699-2341	7		RESISTOR 45K .1% .125W TF TC=0+-50	07953	RN14C2B45K OHM B
A9R58	2100-3207	1	1	RESISTOR-TRMR 5K 10% C SIDE-ADJ 1-TRN	28480	2100-3207

*** Indicates factory selected value.**

Table 4. A9 Replaceable Parts (7 of 11)

Reference Designator	HP Part Number	C D	Qty.	Description	Mfr Code	Mfr Part Number
A9R59	0757-0455	4	1	RESISTOR 36.5K 1% .125W F TC=0+-100	24546	CT4-1/8-T0-3652-F
A9R60	0698-3155	1		RESISTOR 4.64K 1% .125W F TC=0+-100	24546	CT4-1/8-T0-4641-F
A9R61	0757-0280	3		RESISTOR 1K 1% .125W F TC=0+-100	24546	CT4-1/8-T0-1001-F
A9R62	0757-0401	0	6	RESISTOR 100 1% .125W F TC=0+-100	24546	CT4-1/8-T0-101-F
A9R63	0757-0439	4	4	RESISTOR 6.81K 1% .125W F TC=0+-100	24546	CT4-1/8-T0-6811-F
A9R64	0757-0439	4		RESISTOR 6.81K 1% .125W F TC=0+-100	24546	CT4-1/8-T0-6811-F
A9R65	0698-3444	1	4	RESISTOR 316 1% .125W F TC=0+-100	24546	CT4-1/8-T0-316R-F
A9R66	0757-0288	1	2	RESISTOR 9.09K 1% .125W F TC=0+-100	19701	5033R-1/8-T0-9091-F
A9R67	0757-0277	8	4	RESISTOR 49.9 1% .125W F TC=0+-100	28480	0757-0277
A9R68	0757-0280	3		RESISTOR 1K 1% .125W F TC=0+-100	24546	CT4-1/8-T0-1001-F
A9R69	0698-3438	3	5	RESISTOR 147 1% .125W F TC=0+-100	24546	CT4-1/8-T0-147R-F
A9R70	0698-0082	7	16	RESISTOR 464 1% .125W F TC=0+-100	24546	CT4-1/8-T0-4640-F
A9R71	0698-0082	7		RESISTOR 464 1% .125W F TC=0+-100	24546	CT4-1/8-T0-4640-F
A9R72	0698-3438	3		RESISTOR 147 1% .125W F TC=0+-100	24546	CT4-1/8-T0-147R-F
A9R73	0757-0180	2	2	RESISTOR 31.6 1% .125W F TC=0+-100	28480	0757-0180
A9R74	0757-0419	0	2	RESISTOR 681 1% .125W F TC=0+-100	24546	CT4-1/8-T0-681R-F
A9R75	2100-3274	2	1	RESISTOR-TRMR 10K 10% C SIDE-ADJ 1-TRN	28480	2100-3274
A9R76	0757-0403	2	7	RESISTOR 121 1% .125W F TC=0+-100	24546	CT4-1/8-T0-121R-F
A9R77	0757-0279	0	2	RESISTOR 3.16K 1% .125W F TC=0+-100	24546	CT4-1/8-T0-3161-F
A9R78	0698-3438	3		RESISTOR 147 1% .125W F TC=0+-100	24546	CT4-1/8-T0-147R-F
A9R79	0757-0442	9		RESISTOR 10K 1% .125W F TC=0+-100	24546	CT4-1/8-T0-1002-F
A9R80	0757-0442	9		RESISTOR 10K 1% .125W F TC=0+-100	24546	CT4-1/8-T0-1002-F
A9R81	0757-0442	9		RESISTOR 10K 1% .125W F TC=0+-100	24546	CT4-1/8-T0-1002-F
A9R82	0757-0442	9		RESISTOR 10K 1% .125W F TC=0+-100	24546	CT4-1/8-T0-1002-F
A9R83	0757-0442	9		RESISTOR 10K 1% .125W F TC=0+-100	24546	CT4-1/8-T0-1002-F
A9R84	0757-0442	9		RESISTOR 10K 1% .125W F TC=0+-100	24546	CT4-1/8-T0-1002-F
A9R85	0757-0442	9		RESISTOR 10K 1% .125W F TC=0+-100	24546	CT4-1/8-T0-1002-F
A9R86	0757-0442	9		RESISTOR 10K 1% .125W F TC=0+-100	24546	CT4-1/8-T0-1002-F
A9R87	0757-0280	3		RESISTOR 1K 1% .125W F TC=0+-100	24546	CT4-1/8-T0-1001-F
A9R88	0698-3155	1		RESISTOR 4.64K 1% .125W F TC=0+-100	24546	CT4-1/8-T0-4641-F
A9R89	0757-0280	3		RESISTOR 1K 1% .125W F TC=0+-100	24546	CT4-1/8-T0-1001-F
A9R90	0698-3155	1		RESISTOR 4.64K 1% .125W F TC=0+-100	24546	CT4-1/8-T0-4641-F
A9R91	0698-3243	8		RESISTOR 178K 1% .125W F TC=0+-100	24546	CT4-1/8-T0-1783-F
A9R92	0757-0274	5		RESISTOR 1.21K 1% .125W F TC=0+-100	24546	CT4-1/8-T0-1211-F
A9R93	0698-8649	8		RESISTOR 1.28M .1% .25W F TC=0+-25	28480	0698-8649
A9R94	0757-0442	9		RESISTOR 10K 1% .125W F TC=0+-100	24546	CT4-1/8-T0-1002-F
A9R95	0698-3157	3		RESISTOR 19.6K 1% .125W F TC=0+-100	24546	CT4-1/8-T0-1962-F
A9R96	0757-0200	7		RESISTOR 5.62K 1% .125W F TC=0+-100	24546	CT4-1/8-T0-5621-F
A9R97	0698-6360	6		RESISTOR 10K .1% .125W F TC=0+-25	28480	0698-6360
A9R98	0698-3155	1		RESISTOR 4.64K 1% .125W F TC=0+-100	24546	CT4-1/8-T0-4641-F
A9R99	0698-3155	1		RESISTOR 4.64K 1% .125W F TC=0+-100	24546	CT4-1/8-T0-4641-F
A9R100	0757-0280	3		RESISTOR 1K 1% .125W F TC=0+-100	24546	CT4-1/8-T0-1001-F
A9R101	0757-0443	0		RESISTOR 11K 1% .125W F TC=0+-100	24546	CT4-1/8-T0-1102-F
A9R102	0757-0278	9		RESISTOR 1.78K 1% .125W F TC=0+-100	24546	CT4-1/8-T0-1781-F
A9R103	0757-0465	6		RESISTOR 100K 1% .125W F TC=0+-100	24546	CT4-1/8-T0-1003-F
A9R104	0757-0465	6		RESISTOR 100K 1% .125W F TC=0+-100	24546	CT4-1/8-T0-1003-F
A9R105	0757-0465	6		RESISTOR 100K 1% .125W F TC=0+-100	24546	CT4-1/8-T0-1003-F
A9R106	0699-2342	8		RESISTOR 1.527K .1% .125W TF TC=0+-50	07953	RN14C281.527K OHM B
A9R107	0699-2344	0		RESISTOR 5K .1% .125W TF TC=0+-50	07953	RN14C285K OHM B
A9R108	0699-2341	7		RESISTOR 45K .1% .125W TF TC=0+-50	07953	RN14C2B45K OHM B
A9R109	0699-2339	3		RESISTOR 22.5K .1% .125W TF TC=0+-50	07953	RN14C2B22.5K OHM B
A9R110	0699-2343	9		RESISTOR 15K .1% .125W TF TC=0+-50	07953	RN14C2B15K OHM B

*** Indicates factory selected value.**

Table 4. A9 Replaceable Parts (8 of 11)

Reference Designator	HP Part Number	C D	Qty.	Description	Mfr Code	Mfr Part Number
A9R111	0699-2337	1		RESISTOR 4.63K .1% .125W TF TC=0+-50	07953	RN14C2B4.63K OHM B
A9R112	0699-2338	2		RESISTOR 67.5K .1% .125W TF TC=0+-50	07953	RN14C2B67.5K OHM B
A9R113	0699-2340	6		RESISTOR 135K .1% .125W TF TC=0+-50	07953	RN14C2B135K OHM B
A9R114	0757-0442	9		RESISTOR 10K 1% .125W F TC=0+-100	24546	CT4-1/8-T0-1002-F
A9R115	0757-0442	9		RESISTOR 10K 1% .125W F TC=0+-100	24546	CT4-1/8-T0-1002-F
A9R116	0757-0199	3		RESISTOR 21.5K 1% .125W F TC=0+-100	24546	CT4-1/8-T0-2152-F
A9R117	0757-0199	3		RESISTOR 21.5K 1% .125W F TC=0+-100	24546	CT4-1/8-T0-2152-F
A9R118	0757-0199	3		RESISTOR 21.5K 1% .125W F TC=0+-100	24546	CT4-1/8-T0-2152-F
A9R119	0757-0442	9		RESISTOR 10K 1% .125W F TC=0+-100	24546	CT4-1/8-T0-1002-F
A9R120	0757-0442	9		RESISTOR 10K 1% .125W F TC=0+-100	24546	CT4-1/8-T0-1002-F
A9R121	0757-0199	3		RESISTOR 21.5K 1% .125W F TC=0+-100	24546	CT4-1/8-T0-2152-F
A9R122	0757-0199	3		RESISTOR 21.5K 1% .125W F TC=0+-100	24546	CT4-1/8-T0-2152-F
A9R123	0757-0199	3		RESISTOR 21.5K 1% .125W F TC=0+-100	24546	CT4-1/8-T0-2152-F
A9R124	0699-2337	1		RESISTOR 4.63K .1% .125W TF TC=0+-50	07953	RN14C2B4.63K OHM B
A9R125	0699-2343	9		RESISTOR 15K .1% .125W TF TC=0+-50	07953	RN14C2B15K OHM B
A9R126	0699-2338	2		RESISTOR 67.5K .1% .125W TF TC=0+-50	07953	RN14C2B67.5K OHM B
A9R127	0699-2340	6		RESISTOR 135K .1% .125W TF TC=0+-50	07953	RN14C2B135K OHM B
A9R128	0699-2342	8		RESISTOR 1.527K .1% .125W TF TC=0+-50	07953	RN14C281.527K OHM B
A9R129	0699-2344	0		RESISTOR 5K .1% .125W TF TC=0+-50	07953	RN14C285K OHM B
A9R130	0699-2339	3		RESISTOR 22.5K .1% .125W TF TC=0+-50	07953	RN14C2B22.5K OHM B
A9R131	0699-2341	7		RESISTOR 45K .1% .125W TF TC=0+-50	07953	RN14C2B45K OHM B
A9R132	0698-3161	9	1	RESISTOR 38.3K 1% .125W F TC=0+-100	24546	CT4-1/8-T0-3832-F
A9R133	0757-0280	3		RESISTOR 1K 1% .125W F TC=0+-100	24546	CT4-1/8-T0-1001-F
A9R134	0698-3155	1		RESISTOR 4.64K 1% .125W F TC=0+-100	24546	CT4-1/8-T0-4641-F
A9R135	0757-0401	0		RESISTOR 100 1% .125W F TC=0+-100	24546	CT4-1/8-T0-101-F
A9R136	0757-0439	4		RESISTOR 6.81K 1% .125W F TC=0+-100	24546	CT4-1/8-T0-6811-F
A9R137	0757-0439	4		RESISTOR 6.81K 1% .125W F TC=0+-100	24546	CT4-1/8-T0-6811-F
A9R138	0698-3444	1		RESISTOR 316 1% .125W F TC=0+-100	24546	CT4-1/8-T0-316R-F
A9R139	0757-0288	1		RESISTOR 9.09K 1% .125W F TC=0+-100	19701	5033R-1/8-T0-9091-F
A9R140	0757-0277	8		RESISTOR 49.9 1% .125W F TC=0+-100	28480	0757-0277
A9R141	0757-0280	3		RESISTOR 1K 1% .125W F TC=0+-100	24546	CT4-1/8-T0-1001-F
A9R142	0698-3438	3		RESISTOR 147 1% .125W F TC=0+-100	24546	CT4-1/8-T0-147R-F
A9R143	0698-0082	7		RESISTOR 464 1% .125W F TC=0+-100	24546	CT4-1/8-T0-4640-F
A9R144	0698-0082	7		RESISTOR 464 1% .125W F TC=0+-100	24546	CT4-1/8-T0-4640-F
A9R145	0698-3438	3		RESISTOR 147 1% .125W F TC=0+-100	24546	CT4-1/8-T0-147R-F
A9R146	0757-0180	2		RESISTOR 31.6 1% .125W F TC=0+-100	28480	0757-0180
A9R147	0757-0403	2		RESISTOR 121 1% .125W F TC=0+-100	24546	CT4-1/8-T0-121R-F
A9R148	0757-0419	0		RESISTOR 681 1% .125W F TC=0+-100	24546	CT4-1/8-T0-681R-F
A9R149	0757-0279	0		RESISTOR 3.16K 1% .125W F TC=0+-100	24546	CT4-1/8-T0-3161-F
A9R150	0757-0346	2	1	RESISTOR 10 1% .125W F TC=0+-100	28480	0757-0346
A9R151	0698-0082	7		RESISTOR 464 1% .125W F TC=0+-100	24546	CT4-1/8-T0-4640-F
A9R152	0757-0199	3	1	RESISTOR 21.5K 1% .125W F TC=0+-100	24546	CT4-1/8-T0-2152-F
A9R153	0757-0465	6		RESISTOR 100K 1% .125W F TC=0+-100	24546	CT4-1/8-T0-1003-F
A9R154	0757-0416	7	1	RESISTOR 511 1% .125W F TC=0+-100	24546	CT4-1/8-T0-511R-F
A9R155	0757-0465	6		RESISTOR 100K 1% .125W F TC=0+-100	24546	CT4-1/8-T0-1003-F
A9R156	0757-0465	6		RESISTOR 100K 1% .125W F TC=0+-100	24546	CT4-1/8-T0-1003-F
A9R157	0757-0465	6		RESISTOR 100K 1% .125W F TC=0+-100	24546	CT4-1/8-T0-1003-F
A9R158	0757-0461	2	2	RESISTOR 68.1K 1% .125W F TC=0+-100	24546	CT4-1/8-T0-6812-F
A9R159	0757-0442	9		RESISTOR 10K 1% .125W F TC=0+-100	24546	CT4-1/8-T0-1002-F
A9R160	0757-0461	2		RESISTOR 68.1K 1% .125W F TC=0+-100	24546	CT4-1/8-T0-6812-F
A9R161	0757-0442	9		RESISTOR 10K 1% .125W F TC=0+-100	24546	CT4-1/8-T0-1002-F
A9R162	0698-0083	8	4	RESISTOR 1.96K 1% .125W F TC=0+-100	24546	CT4-1/8-T0-1961-F
A9R163	0698-0083	8		RESISTOR 1.96K 1% .125W F TC=0+-100	24546	CT4-1/8-T0-1961-F

*** Indicates factory selected value.**

Table 4. A9 Replaceable Parts (9 of 11)

Reference Designator	HP Part Number	C D	Qty.	Description	Mfr Code	Mfr Part Number
A9R164	0698-0083	8		RESISTOR 1.96K 1% .125W F TC=0+-100	24546	CT4-1/8-T0-1961-F
A9R165	0698-0083	8		RESISTOR 1.96K 1% .125W F TC=0+-100	24546	CT4-1/8-T0-1961-F
A9R166	0757-0465	6		RESISTOR 100K 1% .125W F TC=0+-100	24546	CT4-1/8-T0-1003-F
A9R167	0757-0465	6		RESISTOR 100K 1% .125W F TC=0+-100	24546	CT4-1/8-T0-1003-F
A9R168	0757-0465	6		RESISTOR 100K 1% .125W F TC=0+-100	24546	CT4-1/8-T0-1003-F
A9R169	0757-0465	6		RESISTOR 100K 1% .125W F TC=0+-100	24546	CT4-1/8-T0-1003-F
A9R170	0757-0465	6		RESISTOR 100K 1% .125W F TC=0+-100	24546	CT4-1/8-T0-1003-F
A9R171	0757-0428	1	2	RESISTOR 1.62K 1% .125W F TC=0+-100	24546	CT4-1/8-T0-1621-F
A9R172	0757-0428	1		RESISTOR 1.62K 1% .125W F TC=0+-100	24546	CT4-1/8-T0-1621-F
A9R173	0757-0278	9		RESISTOR 1.78K 1% .125W F TC=0+-100	24546	CT4-1/8-T0-1781-F
A9R174	0757-0403	2		RESISTOR 121 1% .125W F TC=0+-100	24546	CT4-1/8-T0-121R-F
A9R175	0698-0082	7		RESISTOR 464 1% .125W F TC=0+-100	24546	CT4-1/8-T0-4640-F
A9R176	0698-3447	4		RESISTOR 422 1% .125W F TC=0+-100	24546	CT4-1/8-T0-422R-F
A9R177	0698-0082	7		RESISTOR 464 1% .125W F TC=0+-100	24546	CT4-1/8-T0-4640-F
A9R178	0757-0274	5		RESISTOR 1.21K 1% .125W F TC=0+-100	24546	CT4-1/8-T0-1211-F
A9R179	0698-0082	7		RESISTOR 464 1% .125W F TC=0+-100	24546	CT4-1/8-T0-4640-F
A9R180	0698-0082	7		RESISTOR 464 1% .125W F TC=0+-100	24546	CT4-1/8-T0-4640-F
A9R181	0698-0082	7		RESISTOR 464 1% .125W F TC=0+-100	24546	CT4-1/8-T0-4640-F
A9R182	0698-0082	7		RESISTOR 464 1% .125W F TC=0+-100	24546	CT4-1/8-T0-4640-F
A9R183	0698-0082	7		RESISTOR 464 1% .125W F TC=0+-100	24546	CT4-1/8-T0-4640-F
A9R184	0698-0082	7		RESISTOR 464 1% .125W F TC=0+-100	24546	CT4-1/8-T0-4640-F
A9R185	0698-0082	7		RESISTOR 464 1% .125W F TC=0+-100	24546	CT4-1/8-T0-4640-F
A9R186	0698-3439	4	4	RESISTOR 178 1% .125W F TC=0+-100	24546	CT4-1/8-T0-178R-F
A9R187	0698-3439	4		RESISTOR 178 1% .125W F TC=0+-100	24546	CT4-1/8-T0-178R-F
A9R188	0698-3439	4		RESISTOR 178 1% .125W F TC=0+-100	24546	CT4-1/8-T0-178R-F
A9R189	0698-3439	4		RESISTOR 178 1% .125W F TC=0+-100	24546	CT4-1/8-T0-178R-F
A9R190	0757-0294	9	4	RESISTOR 17.8 1% .125W F TC=0+-100	19701	5033R-1/8-T0-17R8-F
A9R191	0757-0294	9		RESISTOR 17.8 1% .125W F TC=0+-100	19701	5033R-1/8-T0-17R8-F
A9R192	0757-0294	9		RESISTOR 17.8 1% .125W F TC=0+-100	19701	5033R-1/8-T0-17R8-F
A9R193	0757-0294	9		RESISTOR 17.8 1% .125W F TC=0+-100	19701	5033R-1/8-T0-17R8-F
A9R194	0757-0403	2		RESISTOR 121 1% .125W F TC=0+-100	24546	CT4-1/8-T0-121R-F
A9R195	0757-0403	2		RESISTOR 121 1% .125W F TC=0+-100	24546	CT4-1/8-T0-121R-F
A9R196	0757-0403	2		RESISTOR 121 1% .125W F TC=0+-100	24546	CT4-1/8-T0-121R-F
A9R197	0757-0403	2		RESISTOR 121 1% .125W F TC=0+-100	24546	CT4-1/8-T0-121R-F
A9R198-A9R300				NOT ASSIGNED		
A9R301	0698-3440	7	2	RESISTOR 196 1% .125W F TC=0+-100	24546	CT4-1/8-T0-196R-F
A9R302	0698-3154	0	2	RESISTOR 4.22K 1% .125W F TC=0+-100	24546	CT4-1/8-T0-4221-F
A9R303	0698-3154	0		RESISTOR 4.22K 1% .125W F TC=0+-100	24546	CT4-1/8-T0-4221-F
A9R304	0757-0280	3		RESISTOR 1K 1% .125W F TC=0+-100	24546	CT4-1/8-T0-1001-F
A9R305	0757-0277	8		RESISTOR 49.9 1% .125W F TC=0+-100	28480	0757-0277
A9R306	0698-3444	1		RESISTOR 316 1% .125W F TC=0+-100	24546	CT4-1/8-T0-316R-F
A9R307	0757-0277	8		RESISTOR 49.9 1% .125W F TC=0+-100	28480	0757-0277
A9R308	0698-3444	1		RESISTOR 316 1% .125W F TC=0+-100	24546	CT4-1/8-T0-316R-F
A9R309	0698-3440	7		RESISTOR 196 1% .125W F TC=0+-100	24546	CT4-1/8-T0-196R-F
A9R310	0698-0082	7		RESISTOR 464 1% .125W F TC=0+-100	24546	CT4-1/8-T0-4640-F
A9R311	0698-0082	7		RESISTOR 464 1% .125W F TC=0+-100	24546	CT4-1/8-T0-4640-F
A9R312	0757-0280	3		RESISTOR 1K 1% .125W F TC=0+-100	24546	CT4-1/8-T0-1001-F
A9R313	0757-0442	9		RESISTOR 10K 1% .125W F TC=0+-100	24546	CT4-1/8-T0-1002-F
A9R314	0757-0442	9		RESISTOR 10K 1% .125W F TC=0+-100	24546	CT4-1/8-T0-1002-F
A9R315	0757-0442	9		RESISTOR 10K 1% .125W F TC=0+-100	24546	CT4-1/8-T0-1002-F

*** Indicates factory selected value.**

Table 4. A9 Replaceable Parts (10 of 11)

Reference Designator	HP Part Number	C D	Qty.	Description	Mfr Code	Mfr Part Number
A9R316	0757-0442	9		RESISTOR 10K 1% .125W F TC=0+-100	24546	CT4-1/8-T0-1002-F
A9R317	0757-0401	0		RESISTOR 100 1% .125W F TC=0+-100	24546	CT4-1/8-T0-101-F
A9R318	0757-0401	0		RESISTOR 100 1% .125W F TC=0+-100	24546	CT4-1/8-T0-101-F
A9R319	0757-0401	0		RESISTOR 100 1% .125W F TC=0+-100	24546	CT4-1/8-T0-101-F
A9R320	0757-0401	0		RESISTOR 100 1% .125W F TC=0+-100	24546	CT4-1/8-T0-101-F
A9R321-A9R400				NOT ASSIGNED		
A9R401	0757-0442	9		RESISTOR 10K 1% .125W F TC=0+-100	24546	CT4-1/8-T0-1002-F
A9R402	0757-0442	9		RESISTOR 10K 1% .125W F TC=0+-100	24546	CT4-1/8-T0-1002-F
A9R403-A9R410				NOT ASSIGNED		
A9R411	0757-0465	6		RESISTOR 100K 1% .125W F TC=0+-100	24546	CT4-1/8-T0-1003-F
A9R412	0757-0465	6		RESISTOR 100K 1% .125W F TC=0+-100	24546	CT4-1/8-T0-1003-F
A9R413	0757-0465	6		RESISTOR 100K 1% .125W F TC=0+-100	24546	CT4-1/8-T0-1003-F
A9R414	0757-0465	6		RESISTOR 100K 1% .125W F TC=0+-100	24546	CT4-1/8-T0-1003-F
A9R415	0757-0465	6		RESISTOR 100K 1% .125W F TC=0+-100	24546	CT4-1/8-T0-1003-F
A9R416	0757-0465	6		RESISTOR 100K 1% .125W F TC=0+-100	24546	CT4-1/8-T0-1003-F
A9R417	0757-0465	6		RESISTOR 100K 1% .125W F TC=0+-100	24546	CT4-1/8-T0-1003-F
A9R418	0757-0465	6		RESISTOR 100K 1% .125W F TC=0+-100	24546	CT4-1/8-T0-1003-F
A9T1	9100-0822	7	2	TRANSFORMER:PULSE(11307)	28480	9100-0822
A9T2	9100-0822	7		TRANSFORMER:PULSE(11307)	28480	9100-0822
A9U1	04194-80001	6	2	PAL 16L8A-2	28480	04194-80001
A9U2	1820-2488	3	2	IC FF TTL ALS D-TYPE POS-EDGE-TRIG	01295	SN74ALS74AN
A9U3	04194-81803	8	2	HIC AD	28480	04194-81803
A9U4	1826-0521	3	1	IC OP AMP LOW-BIAS-H-IMPD DUAL 8-DIP-P	01295	TL072CP
A9U5	1826-0791	9	2	IC SMPL/HOLD 8-DIP-P PKG	27014	LFN398N
A9U6	PPNR41488	2	4	IC LT1057CN8	28480	PPNR41488
A9U7	PPNR41488	2		IC LT1057CN8	28480	PPNR41488
A9U8	1826-1691	0	2	IC OP AMP H-SLEW-RATE 14-DIP-C PKG	34371	HA1-2539-5
A9U9	1826-0635	0	2	IC OP AMP LOW-OFS 8-DIP-P PKG	06665	OP-07CP
A9U10	04194-80001	6		PAL 16L8A-2	28480	04194-80001
A9U11	04194-81803	8		HIC AD	28480	04194-81803
A9U12	1826-0791	9		IC SMPL/HOLD 8-DIP-P PKG	27014	LFN398N
A9U13	PPNR41488	2		IC LT1057CN8	28480	PPNR41488
A9U14	PPNR41488	2		IC LT1057CN8	28480	PPNR41488
A9U15	1826-1691	0		IC OP AMP H-SLEW-RATE 14-DIP-C PKG	34371	HA1-2539-5
A9U16	1826-0635	0		IC OP AMP LOW-OFS 8-DIP-P PKG	06665	OP-07CP
A9U17	1820-2488	3		IC FF TTL ALS D-TYPE POS-EDGE-TRIG	01295	SN74ALS74AN
A9U18	1826-0138	8	2	IC COMPARATOR GP QUAD 14-DIP-P PKG	01295	LM339N
A9U19	1820-3344	2	1	IC SHF-RGTR CMOS/74HC ASYNCHRO SERIAL-IN	04713	MC74HC595N
A9U20	1826-0138	8		IC COMPARATOR GP QUAD 14-DIP-P PKG	01295	LM339N
A9U21	1826-0527	9	1	IC 337 V RGLTR TO-220	27014	LM337T
A9U22	1820-4080	5	1	IC FF ECL J-K M/S POS-EDGE-TRIG COM	04713	MC10135P
A9U23	1820-0817	8	2	IC FF ECL D-M/S DUAL	04713	MC10131P
A9U24	1820-1400	7	1	IC GATE ECL AND QUAD 2-INP	04713	MC10104P
A9U25	1820-0817	8		IC FF ECL D-M/S DUAL	04713	MC10131P
A9U26	1826-0221	0	1	IC V RGLTR TO-220	04713	MC7912CT
A9U27	1826-0147	9	1	IC 7812 V RGLTR TO-220	04713	MC7812CP
A9U28	1826-0122	0	1	IC 7805 V RGLTR TO-220	07263	7805UC
A9W1	1258-0141	8	10	JUMPER-REMOVABLE FOR 0.025 IN SQ PINS	28480	1258-0141
A9W2	1258-0141	8		JUMPER-REMOVABLE FOR 0.025 IN SQ PINS	28480	1258-0141
A9W3	1258-0141	8		JUMPER-REMOVABLE FOR 0.025 IN SQ PINS	28480	1258-0141

*** Indicates factory selected value.**

Table 4. A9 Replaceable Parts (11 of 11)

Reference Designator	HP Part Number	C D	Qty.	Description	Mfr Code	Mfr Part Number
A9W4	1258-0141	8		JUMPER-REMOVABLE FOR 0.025 IN SQ PINS	28480	1258-0141
A9W5	1258-0141	8		JUMPER-REMOVABLE FOR 0.025 IN SQ PINS	28480	1258-0141
A9W6	1258-0141	8		JUMPER-REMOVABLE FOR 0.025 IN SQ PINS	28480	1258-0141
A9W7	1258-0141	8		JUMPER-REMOVABLE FOR 0.025 IN SQ PINS	28480	1258-0141
A9W8	1258-0141	8		JUMPER-REMOVABLE FOR 0.025 IN SQ PINS	28480	1258-0141
A9W9	1258-0141	8		JUMPER-REMOVABLE FOR 0.025 IN SQ PINS	28480	1258-0141
A9W10				NOT ASSIGNED		
A9W11	8159-0005	0	4	RESISTOR-ZERO OHMS 22 AWG LEAD DIA	28480	8159-0005
A9W12	8159-0005	0		RESISTOR-ZERO OHMS 22 AWG LEAD DIA	28480	8159-0005
A9W13	8159-0005	0		RESISTOR-ZERO OHMS 22 AWG LEAD DIA	28480	8159-0005
A9W14	8159-0005	0		RESISTOR-ZERO OHMS 22 AWG LEAD DIA	28480	8159-0005
A9W15-A9W49				NOT ASSIGNED		
A9W50	1258-0141	8		JUMPER-REMOVABLE FOR 0.025 IN SQ PINS	28480	1258-0141
	4040-0748	3	1	EXTR-PC BD BLK POLYC .062-IN-BD-THKNS	28480	4040-0748
	4040-0756	3	1	EXTR-PC BD WHT POLYC .062-IN-BD-THKNS	28480	4040-0756
	04195-00612		1	CASE SHIELD, COMPONENT SIDE (LARGE)		
	04195-00614		1	CASE SHIELD, CIRCUIT SIDE (LARGE)		
	04195-00611		1	CASE SHIELD, COMPONENT SIDE (SMALL)		
	04195-00613		1	CASE SHIELD, CIRCUIT SIDE (SMALL)		

*** Indicates factory selected value.**

Table 5. Connector Pin Assignments

A9J12 (XR)

	a	b	c	
1				1
2				2
3				3
4	+7V	+7V	+7V	4
5	+16V	+16V	+16V	5
6				6
7	-16V	-16V	-16V	7
8			P-SHIFTER	8
9				9
10		IF-IN		10
11				11
12				12
13				13
14				14
15				15
16				16
17				17
18				18
19				19
20	EOC			20
21				21
22				22
23				23
24				24
25				25
26				26
27				27
28				28
29				28
30				30
31				31
32				32

A9J10 (XL)

	a	b	c	
1	-51V	-51V	-51V	1
2		80M-CLK		2
3				3
4				4
5				5
6				6
7				7
8				8
9			SMPL-HOLD	9
10				10
11			RBW-SLCT	11
12				12
13				13
14				14
15				15
16	CMDT		EOD	16
17				17
18		F-GATE 0		18
19		F-GATE 90		19
20		I-TIME		20
21		C-GATE 0		21
22		C-GATE 90		22
23				23
24		C-CLK		24
25				25
26				26
27				27
28				28
29				29
30				30
31		$\overline{\text{IORESET-B}}$		31
32				32

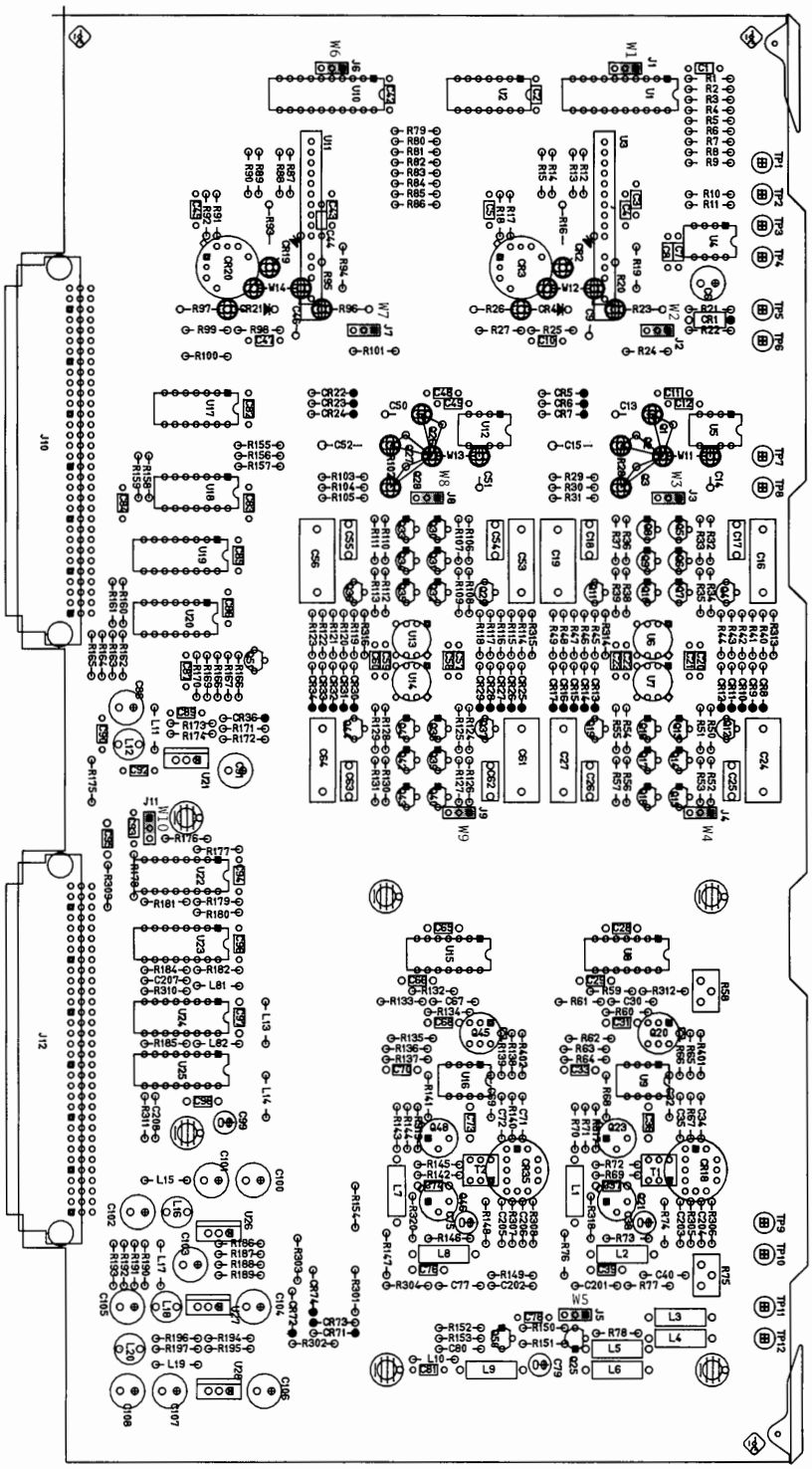

A9 Phase Detector/A-D Converter Board Component Locations

A9 PHASE DETECTOR/ A-D CONVERTER

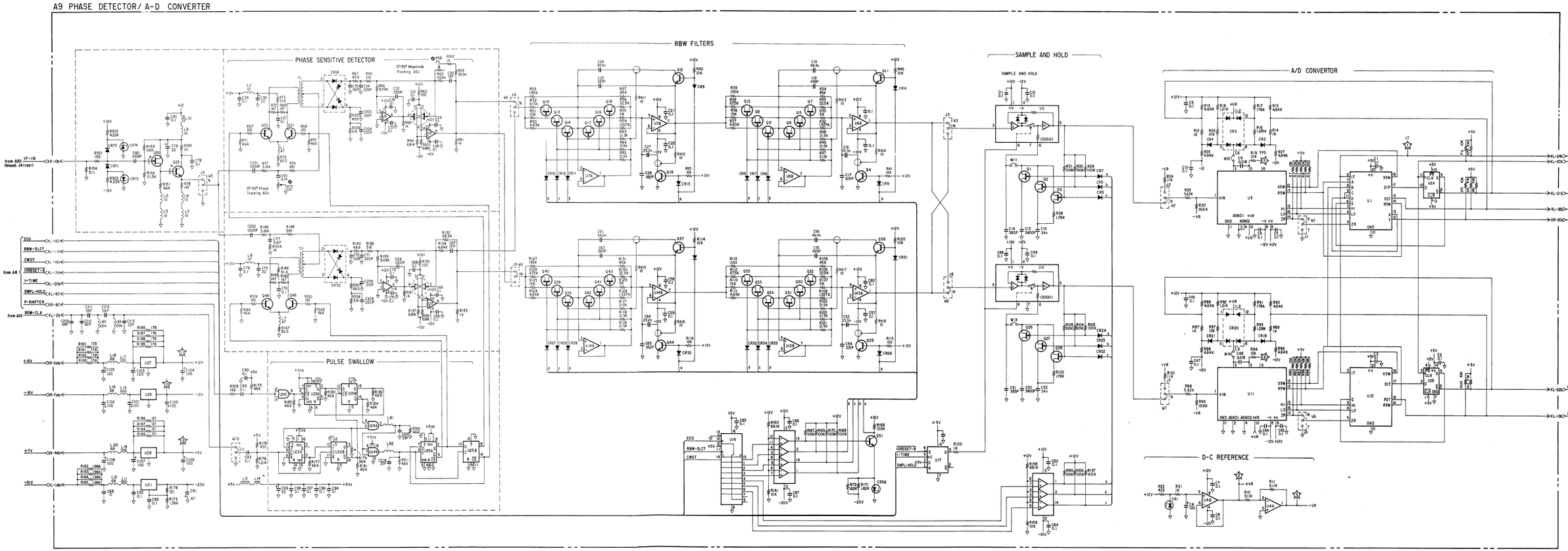

NOTES:

1. REFERENCE DESIGNATORS WITHIN THIS ASSEMBLY ARE ABBREVIATED. PREFIX ABBREVIATION WITH ASSEMBLY NUMBER FOR COMPLETE REFERENCE DESIGNATOR.

2. UNLESS OTHERWISE INDICATED:

   RESISTANCE IN OHMS (Ω)
   CAPACITANCE IN MICROFARADS (μF)
   INDUCTANCE IN MICROHENRIES (μH)

3. ADJUSTMENT NAMES

A9R58	GAIN ADJ
A9R75	PHASE ADJ

FREQUENCY GENERATOR SERVICE SHEET

The A10 Frequency Generator board generates the following signals:

- **Local Oscillator signal (233.333 MHz to 413.333 MHz)** for the receiver/source first IF converters.
- **80 MHz reference signal** used to produce the Local OSC (LO) signals (80 MHz and 160 MHz) for the receiver/source second and third IF converters, and the 6.67 MHz RF signal for the source third IF converter.
- **80 MHz clock signal** used to produce the 6.67 MHz LO signal for the 0°/90° phase detectors on the A9 board.
- **20 MHz reference clock** for the A6 board.
- **10 MHz signal** used to synchronize other equipment to the HP 4195A.

CIRCUIT DESCRIPTION:

Figure 1 is a block diagram of the A10 Frequency Generator board. The A10 board consists of a reference frequency generator section, and a fractional N loop section.

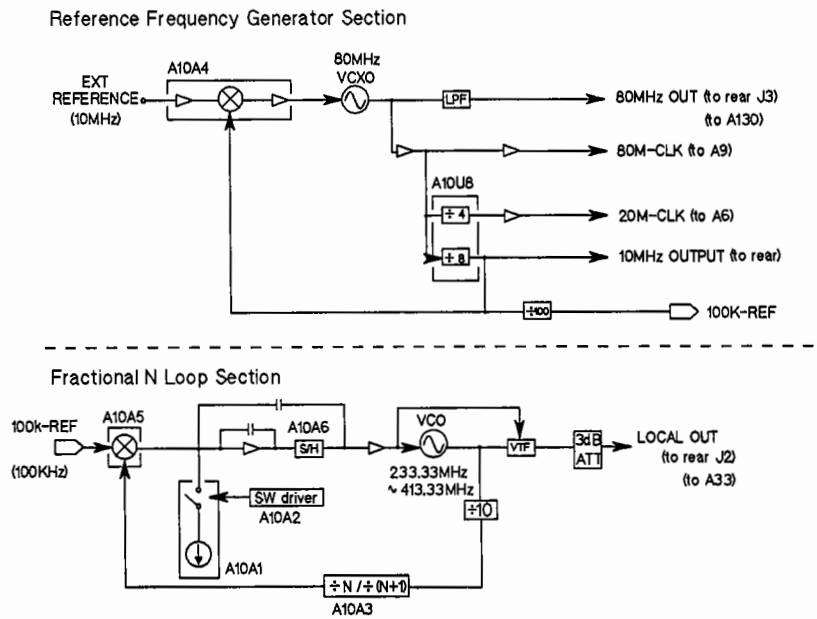

Figure 1. A10 Frequency Generator Block Diagram

REFERENCE FREQUENCY GENERATOR SECTION:

The reference frequency generator section consists of an 80 MHz VCXO, external lock circuit, a lowpass filter, and frequency dividers. The 80 MHz VCXO, external lock circuit, and a ÷8 divider construct a loop which synchronizes the 80 MHz VCXO to an external reference signal input through the EXT REFERENCE connector on the rear panel.

The 80 MHz VCXO (Y1, Q1, Q2) applies the 80 MHz reference signal. The output frequency is controlled by a dc control voltage from the external lock circuit. A10C1 is used to adjust the oscillation amplitude of the 80 MHz crystal oscillator.

The external lock circuit (A10A4) applies a dc control voltage to the 80 MHz VCXO. When the 10 MHz external reference signal is applied to the EXT REFERENCE connector on the rear panel, the external lock circuit applies a dc control voltage which synchronizes the 80 MHz VCXO to an external reference signal. When the reference signal is not applied, the external lock circuit applies the dc voltage set by the adjustment of A10A4R11 (80 MHz VCXO output frequency adjust).

A10U8 is a ÷4/÷8 divider. The 80 MHz signal is divided by 4 and used as the 20M-CLK signal on the A6 board, and the 80 MHz signal is divided by 8 and output through the 10MHz OUTPUT connector on the rear panel, to the external lock circuit (A10A4), and to the ÷100 divider (U10, U11). The output of the ÷100 divider (100k-REF) is used as the reference frequency for the Fractional N Loop (fed to the Phase Detector on A10A5).

FRACTIONAL N LOOP SECTION:

The fractional N loop section consists of a phase detector, an integrator, a sample/hold circuit, an API current source, a VCO, a control logic circuit, etc. The fractional N PLL circuit makes it possible to apply a frequency which is the product of 100 kHz (the reference frequency) and a fractional number. Figure 2 shows the block diagram of the fractional N PLL circuit.

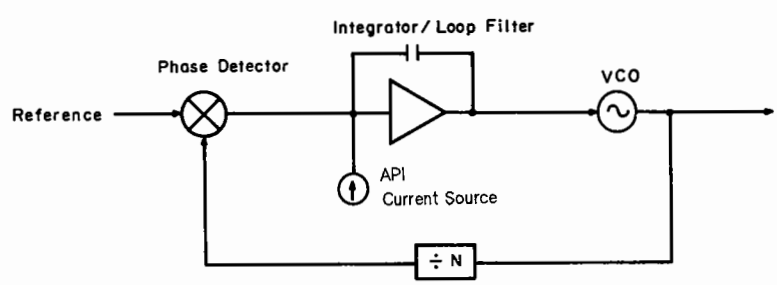

Figure 2. Fractional N PLL Circuit Block Diagram

The difference between a conventional PLL circuit and a fractional N PLL circuit is addition of an API (Analog Phase Interpolation) current source in the fractional N PLL. When the output of the current source is constant, the phase difference between two input signal to the phase detector is not zero, but it is constant, so the frequency of the two signals will remain the same (i.e., the VCO output frequency is a integer (N) multiple of 100 kHz). When the output of the current source increases at a constant rate, the phase difference will increase at a constant rate, causing a slight difference in frequency between the signals. Since the rate of increase for the increasing current is constant, the frequency difference will remain stable (i.e., the VCO applies a frequency which is the product of 100 kHz and a fractional number (N)).

In the actual circuit, the variable current source is realized by using a five-decade range constant current source, a bias current source, and a Sample/Hold circuit. The five-decade current source and bias current source are included in the A10A1 API Source. The total quantity of current injected into the summing node is controlled by the API control signals from the A10A2 API Switch. The five decade API current sources are automatically controlled by the Fractional N Chip on A10A3. When the phase difference between the two signals exceeds 360°, the ÷N divider divides by N+1 (not N) to reset the phase difference between the reference signal (100 kHz) and the ÷N divider output signal. This operation is called a Pulse Swallow operation. If this operation were not performed, the API current

source would have to be able to source an infinite amount of current. The pulse swallow operation is performed at a rate which is a function of the difference between the VCO frequency and an integer (N) multiple of the reference frequency. For example, when the VCO frequency is 200.000002 MHz, a pulse swallow operation is performed twice per second.

The Phase detector (A10A5) compares the phase of the 100k-REF signal and the N divided VCO output signal, and applies a negative pulse (P/D-OUT) to the integrator. The pulse width of the phase detector output signal is equal to the phase difference between the two input signals to the integrator.

The current from the API Source (A10A1) charges/discharges the integrator (U25, C65). When the API-GATE signal from the API Switch (A10A2) is high, the integrator is charged by the current (API-OUT) through CR4. When the P/D-OUT signal from the Phase Detector (A10A5) is low, the integrator is discharged by the current (P/D CURRENT) through CR6. The integrator output is applied to the Sample/Hold (A10A6) as the S/H IN signal. Figure 3 shows the integrator output waveform and the related timing.

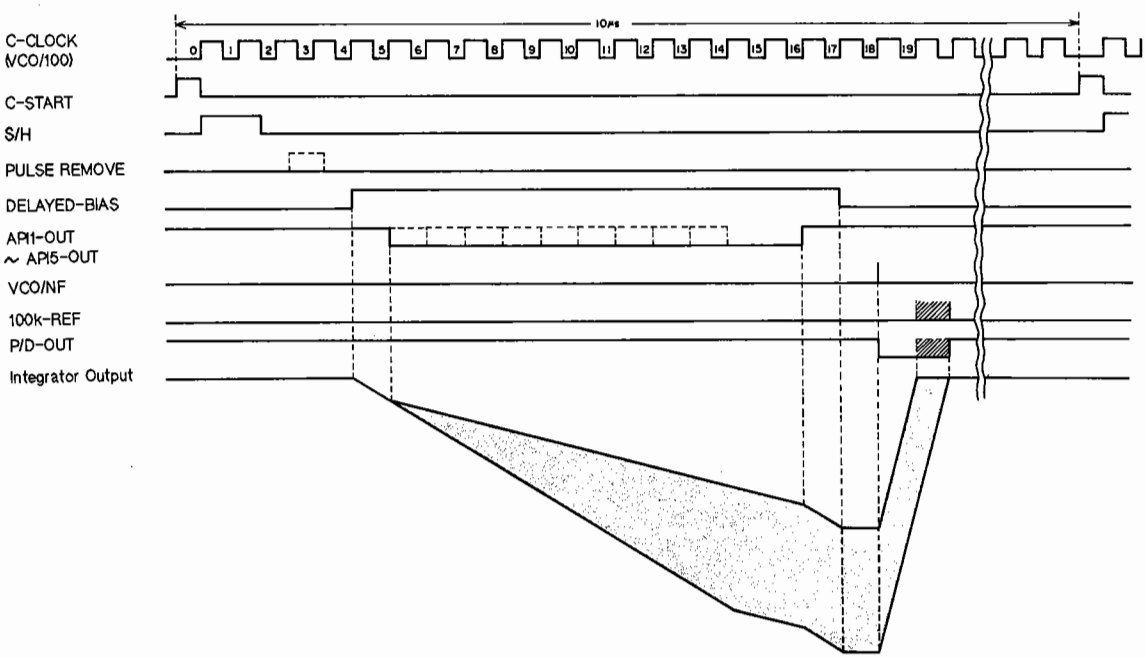

Figure 3. Fractional N Loop Timing Diagram

The API Source (A10A1) applies a current (API-OUT) to the feedback node of the integrator. API-OUT is controlled by the fractional N chip on A10A3 Control Logic through the API Switch (A10A2). The current level is switched in 10 steps.

The API Switch (A10A2) generates the API current control signals. The output signals API1-OUT, API2-OUT, API3-OUT, API4-OUT and API5-OUT are controlled by the API-1, API-2, API-3, API-4 and API-5 signals from the Control Logic circuit (A10A3), respectively.

The Sample/Hold (A10A6) samples and holds (analog memory) the integrator output by synchronizing to the S/H signal from the Control Logic (A10A3). The held voltage is applied to the VCO through the Loop Gain Equalizer, and a 100 kHz Notch Filter.

The Loop Gain Equalizer (U1, CR8, CR9, CR12) is used to compensate for the non-linearity of the VCO's input voltage vs output frequency characteristics. Figure 4 shows the input/output characteristics of the loop gain equalizer, and the input voltage/output frequency characteristics of the VCO.

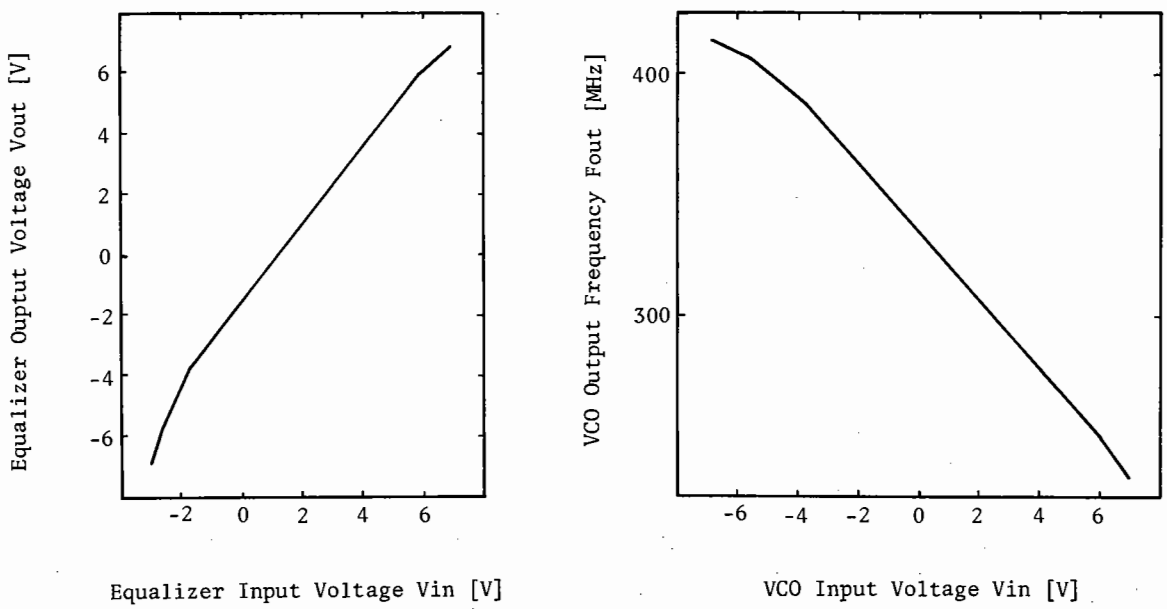

Figure 4. Loop Gain Equalizer Vin-Vout, VCO Vin-Fout Characteristics

A 100 kHz Notch Filter is used to suppress the 100 kHz component (period for sample/hold) of the VCO control signal from the Loop Gain Equalizer. The VCO generates a frequency defined by the VCO dc control voltage from the 100 kHz Notch Filter, and feeds it to A130 board. The oscillator's frequency range is from 233.33 MHz to 413.33 MHz. The VCO output signal is divided by High Speed ÷10 Dividers U17 and U18, and is fed to the Control Logic (A10A3).

The Voltage Tunable LPF is used to filter-out harmonics from the VCO output signal. The cut-off frequency is controlled by the Loop Gain Equalizer output voltage.

The Control Logic (A10A3) controls the API Switch (A10A2), and divides the VCO/10 signal from the High Speed Dividers by N (integer number), and applies the divided signal as the VCO/NF signal to the Phase Detector (A10A5).

TROUBLESHOOTING GUIDE:

1. A10W3:

This jumper is normally connected to the N-side. When this jumper is connected to the N-side, the External Lock (A10A4) output is connected to the 80 MHz VCXO. When this jumper is connected to the other side (Test position), zero volts is applied to the 80 MHz VCXO. When this jumper is left open, an external dc supply can be used to apply a voltage < +8 V to the 80 MHz VCXO through the center pin by the external dc supply for troubleshooting.

2. Measurement Frequency and VCO Output Frequency:

The following lists the relationship between the measurement frequency and the VCO output frequency.

Measurement Frequency (Fm)	VCO Output Frequency
10 Hz ≤ Fm < 150 MHz	Fm + 246.666 666 666 MHz
150 MHz ≤ Fm < 320 MHz	Fm + 86.666 666 666 MHz
320 MHz ≤ Fm ≤ 500 MHz	Fm - 86.666 666 666 MHz

3. 80 MHz OUTPUT (J3):

The output frequency from the J3 connector (80MHz OUTPUT) can be varied by A10A4R11. The variable frequency range is approximately 80 MHz ±3 kHz, when an EXT REFERENCE is not connected.

4. A10A4 Output Voltage:

The dc voltage output from A10A4 pin 17 can be varied by A10A4R11. The variable voltage range will be approximately -9 V to +6 V, when an EXT REFERENCE is not connected and A10W3 is set to the Test position.

5. 80 MHz VCXO Output Waveform:

Settings:

Spectrum Analyzer:

CENTER:	80 MHz
SPAN:	50 MHz

HP 4195A:

1 Disconnect the BNC cable from J3 on the rear panel

2 Set A10W3 to the Test position

Cable Connections:

HP 4195A J3 to Spectrum Analyzer INPUT

Waveform:

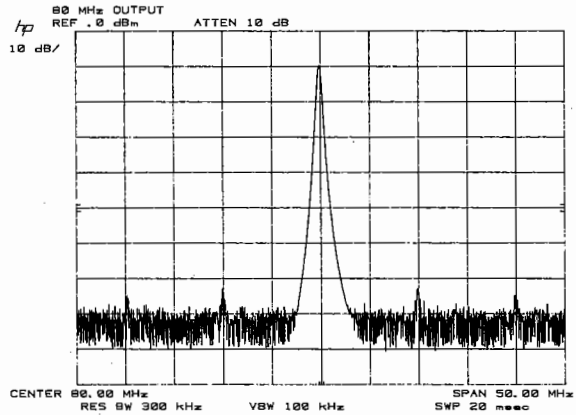

6. 10 MHz OUTPUT Waveform:

Settings:

Oscilloscope:

CHAN:	200 mV/div
TIME:	10 ms/div
INPUT IMPEDANCE:	50 Ω

HP 4195A:

Set A10W3 to the Test position

Cable connection:

HP 4195A 10MHz OUTPUT to Oscilloscope INPUT by 50 Ω BNC cable

Waveform:

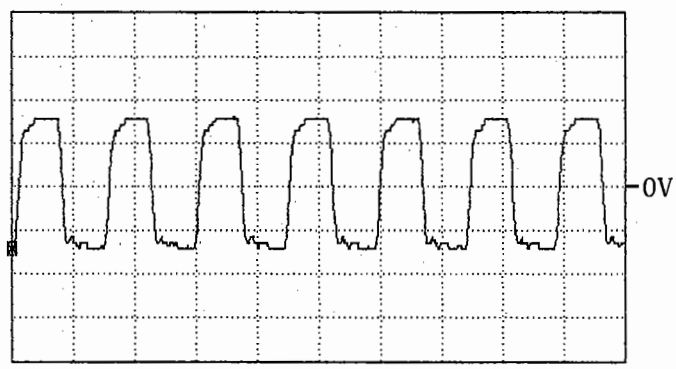

7. Phase Detector Input/Output Waveform:

Settings:

Oscilloscope:

CHAN 1:	4 V/div
CHAN 2,3,4:	2 V/div
TIME:	1 µs/div

HP 4195A:

CONFIG:	NETWORK
CENTER:	386.666666666 MHz
SPAN:	0 Hz

Trace 1:
C-START signal of the fractional N Chip pin 28 on A10A3

Trace 2:
VCO/NF signal on A10A5 pin 7

Trace 3:
100k-REF signal on A10A5 pin 3

Trace 4:
P/D-OUT signal on A10A5 pin 24

Waveform:

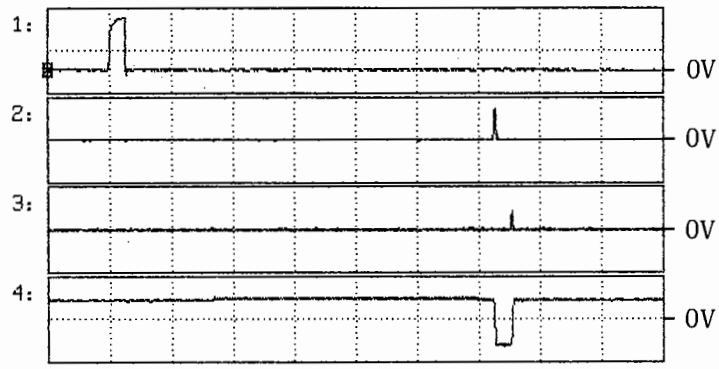

8. Integrator Output Waveform:

Settings:

Oscilloscope:

CHAN:	500 mV/div
TIME:	1 µs/div
Probe Tip:	A10A6 pin 6

HP 4195A:

CONFIG:	NETWORK
CENTER:	386.666666666 MHz
SPAN:	0 Hz

Waveform:

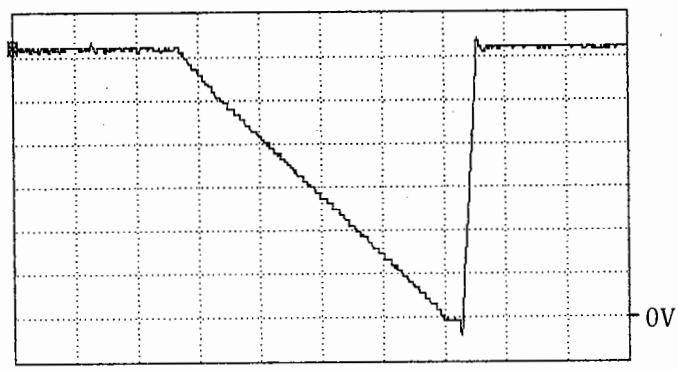

9. A10A6 (Sample/Hold) Input/Output Waveform:

Settings:

Oscilloscope:

CHAN 1,2	10 V/div
TIME:	50 ms/div
Probe Tip (CH 1):	A10A6 pin 6 (INPUT)
Probe Tip (CH 2):	TP 2 (OUTPUT)

HP 4195A:

CONFIG:	NETWORK
START:	320 MHz
STOP:	500 MHz
NOP (number of points)	5
ST (sweep time):	0.1 sec

Waveform:

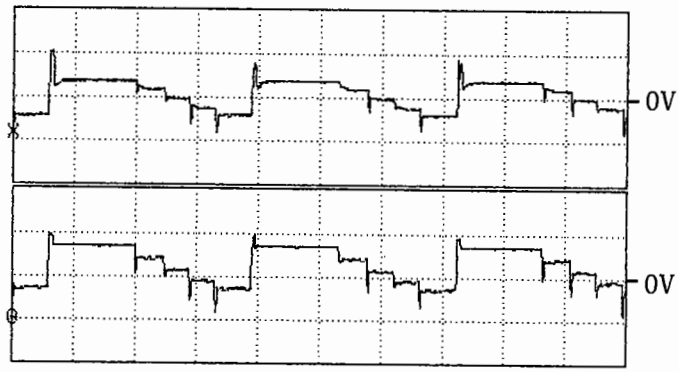

10. Loop Gain Equalizer Input/Output Waveform:

Settings:

Oscilloscope:

CHAN 1,2	10 V/div
TIME:	50 ms/div
Probe Tip (CH 1):	TP 2 (INPUT)
Probe Tip (CH 2):	TP 3 (OUTPUT)

HP 4195A:

CONFIG:	NETWORK
START:	320 MHz
STOP:	500 MHz
NOP (number of points)	5
ST (sweep time):	0.1 sec

Waveform:

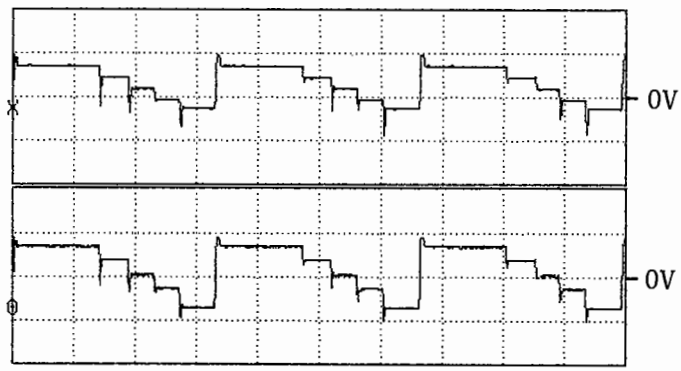

11. VCO Output Waveform:

Settings:

Spectrum Analyzer:

CENTER:	320 MHz
SPAN:	1 MHz
RBW:	1 kHz

HP 4195A:

CENTER:	406.666666666 MHz
SPAN:	0 Hz

Disconnect the BNC cable from J2 and EXT REFERENCE

Cable connections:

1. HP 4195A EXT REFERENCE to Spectrum Analyzer FREQ REFERENCE OUTPUT
2. HP 4195A J2 to Spectrum Analyzer INPUT

Waveform:

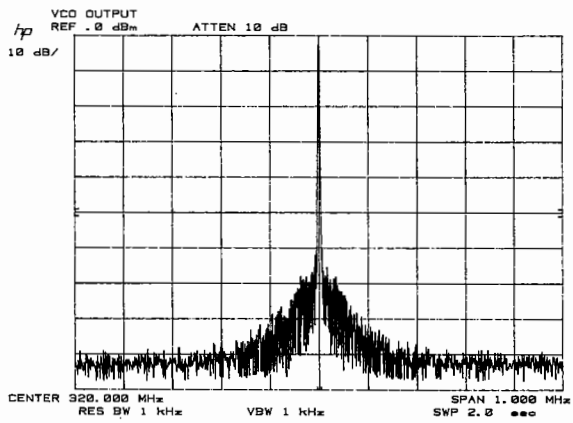

Table 1. A10 Replaceable Parts (1 of 8)

Reference Designator	HP Part Number	C D	Qty.	Description	Mfr Code	Mfr Part Number
A10				FREQUENCY GENERATOR		
A10	04195-66510	3	1	REF OSC BD ASSY	28480	04195-66510
A10A1	04195-66575	0	1	F-N API I SOURCE	28480	04195-66575
A10A2	04195-66574	9	1	F-N API SWITCH	28480	04195-66574
A10A3	04195-66577	2	1	FN LOGIC BD ASY	28480	04195-66577
A10A4	04195-66578	3	1	EXT REF LOCK BD	28480	04195-66578
A10A5	04195-66571	6	1	F-N PHASE/DET BD	28480	04195-66571
A10A6	04195-66573	8	1	F-N SAMPLE/HOLD	28480	04195-66573
A10C1	0121-0105	4	1	CAPACITOR-V TRMR-CER 9-35PF 200V PC-MTG	73899	DV11PR35D
A10C2	0180-3363	6	61	CAPACITOR-FXD 22UF+-20% 25VDC AL	28480	0180-3363
A10C3	0160-4791	4	4	CAPACITOR-FXD 10PF +-5% 100VDC CER 0+-30	28480	0160-4791
A10C4	0160-4797	0	1	CAPACITOR-FXD 3.3PF +-.25PF 100VDC CER	28480	0160-4797
A10C5	0180-3363	6		CAPACITOR-FXD 22UF+-20% 25VDC AL	28480	0180-3363
A10C6	0160-4822	2	5	CAPACITOR-FXD 1000PF +-5% 100VDC CER	28480	0160-4822
A10C7	0160-6561	0	21	CAPACITOR-FXD .1UF +-20% 50VDC CER	16299	CAC02Z5U104M050A
A10C8	0160-4791	4		CAPACITOR-FXD 10PF +-5% 100VDC CER 0+-30	28480	0160-4791
A10C9	0160-4791	4		CAPACITOR-FXD 10PF +-5% 100VDC CER 0+-30	28480	0160-4791
A10C10	0160-4806	2	1	CAPACITOR-FXD 39PF +-5% 100VDC CER 0+-30	28480	0160-4806
A10C11	0180-3363	6		CAPACITOR-FXD 22UF+-20% 25VDC AL	28480	0180-3363
A10C12	0180-3363	6		CAPACITOR-FXD 22UF+-20% 25VDC AL	28480	0180-3363
A10C13	0180-3363	6		CAPACITOR-FXD 22UF+-20% 25VDC AL	28480	0180-3363
A10C14	0180-3363	6		CAPACITOR-FXD 22UF+-20% 25VDC AL	28480	0180-3363
A10C15	0180-3363	6		CAPACITOR-FXD 22UF+-20% 25VDC AL	28480	0180-3363
A10C16	0180-3363	6		CAPACITOR-FXD 22UF+-20% 25VDC AL	28480	0180-3363
A10C17	0180-3363	6		CAPACITOR-FXD 22UF+-20% 25VDC AL	28480	0180-3363
A10C18	0180-3363	6		CAPACITOR-FXD 22UF+-20% 25VDC AL	28480	0180-3363
A10C19	0180-3363	6		CAPACITOR-FXD 22UF+-20% 25VDC AL	28480	0180-3363
A10C20	0180-3363	6		CAPACITOR-FXD 22UF+-20% 25VDC AL	28480	0180-3363
A10C21	0180-3363	6		CAPACITOR-FXD 22UF+-20% 25VDC AL	28480	0180-3363
A10C22	0180-3363	6		CAPACITOR-FXD 22UF+-20% 25VDC AL	28480	0180-3363
A10C23	0180-3363	6		CAPACITOR-FXD 22UF+-20% 25VDC AL	28480	0180-3363
A10C24	0180-3469	3	13	CAPACITOR-FXD 100UF+-20% 25VDC AL	28480	0180-3469
A10C25	0180-3469	3		CAPACITOR-FXD 100UF+-20% 25VDC AL	28480	0180-3469
A10C26	0180-3363	6		CAPACITOR-FXD 22UF+-20% 25VDC AL	28480	0180-3363
A10C27	0180-3363	6		CAPACITOR-FXD 22UF+-20% 25VDC AL	28480	0180-3363
A10C28	0180-3363	6		CAPACITOR-FXD 22UF+-20% 25VDC AL	28480	0180-3363
A10C29	0160-6561	0		CAPACITOR-FXD .1UF +-20% 50VDC CER	16299	CAC02Z5U104M050A
A10C30	0180-3363	6		CAPACITOR-FXD 22UF+-20% 25VDC AL	28480	0180-3363
A10C31	0180-3363	6		CAPACITOR-FXD 22UF+-20% 25VDC AL	28480	0180-3363
A10C32	0160-4824	4	1	CAPACITOR-FXD 680PF +-5% 100VDC CER	28480	0160-4824
A10C33	0160-6337	8	1	CAP 5600PF	28480	0160-6337
A10C34	0160-6336	7	2	CAP 2200PF	28480	0160-6336
A10C35	0180-3363	6		CAPACITOR-FXD 22UF+-20% 25VDC AL	28480	0180-3363
A10C36	0160-4814	2	2	CAPACITOR-FXD 150PF +-5% 100VDC CER	28480	0160-4814
A10C37	0160-3879	7	7	CAPACITOR-FXD .01UF +-20% 100VDC CER	28480	0160-3879
A10C38	0160-3879	7		CAPACITOR-FXD .01UF +-20% 100VDC CER	28480	0160-3879
A10C39	0160-6336	7		CAP 2200PF	28480	0160-6336
A10C40	0160-4814	2		CAPACITOR-FXD 150PF +-5% 100VDC CER	28480	0160-4814
A10C41	0160-3879	7		CAPACITOR-FXD .01UF +-20% 100VDC CER	28480	0160-3879
A10C42	0160-3879	7		CAPACITOR-FXD .01UF +-20% 100VDC CER	28480	0160-3879

*** Indicates factory selected value.**

Table 1. A10 Replaceable Parts (2 of 8)

Reference Designator	HP Part Number	C D	Qty.	Description	Mfr Code	Mfr Part Number
A10C43	0160-3873	1	3	CAPACITOR-FXD 4.7PF +-.5PF 200VDC CER	28480	0160-3873
A10C44	0160-4832	4	4	CAPACITOR-FXD .01UF +-10% 100VDC CER	28480	0160-4832
A10C45	0160-4832	4		CAPACITOR-FXD .01UF +-10% 100VDC CER	28480	0160-4832
A10C46	0160-6561	0		CAPACITOR-FXD .1UF +-20% 50VDC CER	16299	CAC02Z5U104M050A
A10C47	0160-6561	0		CAPACITOR-FXD .1UF +-20% 50VDC CER	16299	CAC02Z5U104M050A
A10C48	0160-4835	7	1	CAPACITOR-FXD .1UF +-10% 50VDC CER	28480	0160-4835
A10C49	0160-6561	0		CAPACITOR-FXD .1UF +-20% 50VDC CER	16299	CAC02Z5U104M050A
A10C50				NOT ASSIGNED		
A10C51	0160-6561	0		CAPACITOR-FXD .1UF +-20% 50VDC CER	16299	CAC02Z5U104M050A
A10C52	0160-4832	4		CAPACITOR-FXD .01UF +-10% 100VDC CER	28480	0160-4832
A10C53	0160-4832	4		CAPACITOR-FXD .01UF +-10% 100VDC CER	28480	0160-4832
A10C54	0180-3363	6		CAPACITOR-FXD 22UF+-20% 25VDC AL	28480	0180-3363
A10C55	0180-3363	6		CAPACITOR-FXD 22UF+-20% 25VDC AL	28480	0180-3363
A10C56	0180-3363	6		CAPACITOR-FXD 22UF+-20% 25VDC AL	28480	0180-3363
A10C57	0180-3363	6		CAPACITOR-FXD 22UF+-20% 25VDC AL	28480	0180-3363
A10C58	0180-3363	6		CAPACITOR-FXD 22UF+-20% 25VDC AL	28480	0180-3363
A10C59	0180-3363	6		CAPACITOR-FXD 22UF+-20% 25VDC AL	28480	0180-3363
A10C60	0180-3363	6		CAPACITOR-FXD 22UF+-20% 25VDC AL	28480	0180-3363
A10C61	0180-3363	6		CAPACITOR-FXD 22UF+-20% 25VDC AL	28480	0180-3363
A10C62	0180-3363	6		CAPACITOR-FXD 22UF+-20% 25VDC AL	28480	0180-3363
A10C63	0180-3363	6		CAPACITOR-FXD 22UF+-20% 25VDC AL	28480	0180-3363
A10C64	0180-3469	3		CAPACITOR-FXD 100UF+-20% 25VDC AL	28480	0180-3469
A10C65	0160-4808	4	1	CAPACITOR-FXD 470PF +-5% 100VDC CER	28480	0160-4808
A10C66	0160-5098	6	1	CAPACITOR-FXD .22UF +-10% 50VDC CER	16299	CAC05X7R224J050A
A10C67	0180-3363	6		CAPACITOR-FXD 22UF+-20% 25VDC AL	28480	0180-3363
A10C68	0180-3363	6		CAPACITOR-FXD 22UF+-20% 25VDC AL	28480	0180-3363
A10C69	0180-3363	6		CAPACITOR-FXD 22UF+-20% 25VDC AL	28480	0180-3363
A10C70	0180-3363	6		CAPACITOR-FXD 22UF+-20% 25VDC AL	28480	0180-3363
A10C71	0180-3363	6		CAPACITOR-FXD 22UF+-20% 25VDC AL	28480	0180-3363
A10C72	0180-3363	6		CAPACITOR-FXD 22UF+-20% 25VDC AL	28480	0180-3363
A10C73	0180-3363	6		CAPACITOR-FXD 22UF+-20% 25VDC AL	28480	0180-3363
A10C74	0160-6561	0		CAPACITOR-FXD .1UF +-20% 50VDC CER	16299	CAC02Z5U104M050A
A10C75	0160-6561	0		CAPACITOR-FXD .1UF +-20% 50VDC CER	16299	CAC02Z5U104M050A
A10C76	0160-6561	0		CAPACITOR-FXD .1UF +-20% 50VDC CER	16299	CAC02Z5U104M050A
A10C77	0180-3363	6		CAPACITOR-FXD 22UF+-20% 25VDC AL	28480	0180-3363
A10C78	0180-3363	6		CAPACITOR-FXD 22UF+-20% 25VDC AL	28480	0180-3363
A10C79	0160-3901	6	1	CAPACITOR-FXD 2.2UF +-20% 25VDC CER	28480	0160-3901
A10C80	0180-3363	6		CAPACITOR-FXD 22UF+-20% 25VDC AL	28480	0180-3363
A10C81	0180-3363	6		CAPACITOR-FXD 22UF+-20% 25VDC AL	28480	0180-3363
A10C82	0160-4822	2		CAPACITOR-FXD 1000PF +-5% 100VDC CER	28480	0160-4822
A10C83	0160-4822	2		CAPACITOR-FXD 1000PF +-5% 100VDC CER	28480	0160-4822
A10C84	0160-6561	0		CAPACITOR-FXD .1UF +-20% 50VDC CER	16299	CAC02Z5U104M050A
A10C85	0160-4792	5	1	CAPACITOR-FXD 8.2PF +-.5PF 100VDC CER	28480	0160-4792
A10C86	0160-6561	0		CAPACITOR-FXD .1UF +-20% 50VDC CER	16299	CAC02Z5U104M050A
A10C87	0180-3363	6		CAPACITOR-FXD 22UF+-20% 25VDC AL	28480	0180-3363
A10C88	0180-3363	6		CAPACITOR-FXD 22UF+-20% 25VDC AL	28480	0180-3363
A10C89	0180-3363	6		CAPACITOR-FXD 22UF+-20% 25VDC AL	28480	0180-3363
A10C90	0180-3363	6		CAPACITOR-FXD 22UF+-20% 25VDC AL	28480	0180-3363
A10C91	0180-3363	6		CAPACITOR-FXD 22UF+-20% 25VDC AL	28480	0180-3363
A10C92	0180-3363	6		CAPACITOR-FXD 22UF+-20% 25VDC AL	28480	0180-3363
A10C93	0180-3363	6		CAPACITOR-FXD 22UF+-20% 25VDC AL	28480	0180-3363
A10C94	0180-3363	6		CAPACITOR-FXD 22UF+-20% 25VDC AL	28480	0180-3363
A10C95	0180-3363	6		CAPACITOR-FXD 22UF+-20% 25VDC AL	28480	0180-3363

*** Indicates factory selected value.**

Table 1. A10 Replaceable Parts (3 of 8)

Reference Designator	HP Part Number	C D	Qty.	Description	Mfr Code	Mfr Part Number
A10C96	0160-6561	0		CAPACITOR-FXD .1UF +-20% 50VDC CER	16299	CAC02Z5U104M050A
	9170-0029	3	6	CORE-SHIELDING BEAD	28480	9170-0029
A10C97	0160-6561	0		CAPACITOR-FXD .1UF +-20% 50VDC CER	16299	CAC02Z5U104M050A
A10C98	0160-6561	0		CAPACITOR-FXD .1UF +-20% 50VDC CER	16299	CAC02Z5U104M050A
A10C99	0160-6561	0		CAPACITOR-FXD .1UF +-20% 50VDC CER	16299	CAC02Z5U104M050A
A10C100	0160-6561	0		CAPACITOR-FXD .1UF +-20% 50VDC CER	16299	CAC02Z5U104M050A
A10C101	0180-3363	6		CAPACITOR-FXD 22UF+-20% 25VDC AL	28480	0180-3363
A10C102	0160-6561	0		CAPACITOR-FXD .1UF +-20% 50VDC CER	16299	CAC02Z5U104M050A
A10C103	0180-3469	3		CAPACITOR-FXD 100UF+-20% 25VDC AL	28480	0180-3469
A10C104	0160-4805	1	1	CAPACITOR-FXD 47PF +-5% 100VDC CER 0+-30	28480	0160-4805
A10C105	0180-3469	3		CAPACITOR-FXD 100UF+-20% 25VDC AL	28480	0180-3469
A10C106				NOT ASSIGNED		
A10C107	0160-6561	0		CAPACITOR-FXD .1UF +-20% 50VDC CER	16299	CAC02Z5U104M050A
A10C108	0180-3363	6		CAPACITOR-FXD 22UF+-20% 25VDC AL	28480	0180-3363
A10C109	0180-3469	3		CAPACITOR-FXD 100UF+-20% 25VDC AL	28480	0180-3469
A10C110	0180-3363	6		CAPACITOR-FXD 22UF+-20% 25VDC AL	28480	0180-3363
A10C111	0180-3363	6		CAPACITOR-FXD 22UF+-20% 25VDC AL	28480	0180-3363
A10C112	0180-3469	3		CAPACITOR-FXD 100UF+-20% 25VDC AL	28480	0180-3469
A10C113	0180-3469	3		CAPACITOR-FXD 100UF+-20% 25VDC AL	28480	0180-3469
A10C114	0180-3469	3		CAPACITOR-FXD 100UF+-20% 25VDC AL	28480	0180-3469
A10C115	0180-3469	3		CAPACITOR-FXD 100UF+-20% 25VDC AL	28480	0180-3469
A10C116	0180-3469	3		CAPACITOR-FXD 100UF+-20% 25VDC AL	28480	0180-3469
A10C117	0180-3363	6		CAPACITOR-FXD 22UF+-20% 25VDC AL	28480	0180-3363
A10C118	0180-3363	6		CAPACITOR-FXD 22UF+-20% 25VDC AL	28480	0180-3363
A10C119	0160-4822	2		CAPACITOR-FXD 1000PF +-5% 100VDC CER	28480	0160-4822
A10C120	0160-4822	2		CAPACITOR-FXD 1000PF +-5% 100VDC CER	28480	0160-4822
A10C121	0160-6561	0		CAPACITOR-FXD .1UF +-20% 50VDC CER	16299	CAC02Z5U104M050A
A10C122	0180-3363	6		CAPACITOR-FXD 22UF+-20% 25VDC AL	28480	0180-3363
A10C123	0160-6561	0		CAPACITOR-FXD .1UF +-20% 50VDC CER	16299	CAC02Z5U104M050A
A10C124	0180-3363	6		CAPACITOR-FXD 22UF+-20% 25VDC AL	28480	0180-3363
A10C125	0180-3363	6		CAPACITOR-FXD 22UF+-20% 25VDC AL	28480	0180-3363
A10C126	0180-3469	3		CAPACITOR-FXD 100UF+-20% 25VDC AL	28480	0180-3469
A10C127				NOT ASSIGNED		
A10C128	0160-4791	4		CAPACITOR-FXD 10PF +-5% 100VDC CER 0+-30	28480	0160-4791
A10C129	0160-3878	6	2	CAPACITOR-FXD 1000PF +-20% 100VDC CER	28480	0160-3878
A10C130	0160-3878	6		CAPACITOR-FXD 1000PF +-20% 100VDC CER	28480	0160-3878
A10C131	0180-3469	3		CAPACITOR-FXD 100UF+-20% 25VDC AL	28480	0180-3469
A10C132-A10C200				NOT ASSIGNED		
A10C201	0180-3363	6		CAPACITOR-FXD 22UF+-20% 25VDC AL	28480	0180-3363
A10C202	0160-4787	8	1	CAPACITOR-FXD 22PF +-5% 100VDC CER 0+-30	28480	0160-4787
A10C203	0160-3873	1		CAPACITOR-FXD 4.7PF +-.5PF 200VDC CER	28480	0160-3873
A10C204	0160-3873	1		CAPACITOR-FXD 4.7PF +-.5PF 200VDC CER	28480	0160-3873
A10C205	0160-6561	0		CAPACITOR-FXD .1UF +-20% 50VDC CER	16299	CAC02Z5U104M050A
	9170-0029	3		CORE-SHIELDING BEAD	28480	9170-0029
A10C206	0160-4793	0	1	CAPACITOR-FXD 6.8PF +-.5PF 100VDC CER	28480	0160-4793
A10C207	0160-4787	8		CAPACITOR-FXD 22PF +-.5PF 100VDC CER 0+-30	28480	0160-4787
A10C208	0160-3879	7		CAPACITOR-FXD .01UF +-20% 100VDC CER	28480	0160-3879
A10C209	0160-3879	7		CAPACITOR-FXD .01UF +-20% 100VDC CER	28480	0160-3879
A10C210	0160-3879	7		CAPACITOR-FXD .01UF +-20% 100VDC CER	28480	0160-3879
A10C211	0160-2238		1	CAPACITOR-FXD		
A10C212	0160-4822	2		CAPACITOR-FXD 1000PF +-5% 100VDC CER	28480	0160-4822

*** Indicates factory selected value.**

Table 1. A10 Replaceable Parts (4 of 8)

Reference Designator	HP Part Number	C D	Qty.	Description	Mfr Code	Mfr Part Number
A10CR1	0122-0169	2	2	DIODE-VARACTOR	28480	0122-0169
A10CR2	0122-0169	2		DIODE-VARACTOR	28480	0122-0169
A10CR3	1901-0518	8	4	DIODE-SM SIG SCHOTTKY	28480	1901-0518
A10CR4	1901-0518	8		DIODE-SM SIG SCHOTTKY	28480	1901-0518
A10CR5	1901-0518	8		DIODE-SM SIG SCHOTTKY	28480	1901-0518
A10CR6	1901-0518	8		DIODE-SM SIG SCHOTTKY	28480	1901-0518
A10CR7	1901-0050	3	6	DIODE-SWITCHING 80V 200MA 2NS DO-35	9N171	1N4150
A10CR8	1901-0050	3		DIODE-SWITCHING 80V 200MA 2NS DO-35	9N171	1N4150
A10CR9	1901-0050	3		DIODE-SWITCHING 80V 200MA 2NS DO-35	9N171	1N4150
A10CR10	0122-0109	0	6	DIODE-VVC	28480	0122-0109
A10CR11	0122-0109	0		DIODE-VVC	28480	0122-0109
A10CR12	1901-0050	3		DIODE-SWITCHING 80V 200MA 2NS DO-35	9N171	1N4150
A10CR13	1902-3110	4	1	DIODE-ZNR 5.9V 2%		
A10CR14				NOT ASSIGNED		
A10CR15				NOT ASSIGNED		
A10CR16	0122-0109	0		DIODE-VVC	28480	0122-0109
A10CR17	0122-0109	0		DIODE-VVC	28480	0122-0109
A10CR18	0122-0109	0		DIODE-VVC	28480	0122-0109
A10CR19	0122-0109	0		DIODE-VVC	28480	0122-0109
A10CR20	1901-0050	3		DIODE-SWITCHING 80V 200MA 2NS DO-35	9N171	1N4150
A10CR21	1901-0050	3		DIODE-SWITCHING 80V 200MA 2NS DO-35	9N171	1N4150
A10J1	1250-1810	4	1	CONNECTOR-RF SMB M PC-OHM	28480	1250-1810
A10J2	1250-0257	1	2	CONNECTOR-RF SMB M PC 50-OHM	28480	1250-0257
A10J3	1250-0257	1		CONNECTOR-RF SMB M PC 50-OHM	28480	1250-0257
A10J4	1252-0720	7	2	CONN-POST TYPE 2.54-PIN-SPCG 96-CONT	28480	1252-0720
A10J5	1252-0720	7		CONN-POST TYPE 2.54-PIN-SPCG 96-CONT	28480	1252-0720
A10J6	1251-4822	6	1	CONN-POST TYPE .100-PIN-SPCG 3-CONT	28480	1251-4822
A10L1	9100-2257	6	1	INDUCTOR RF-CH-MLD 820NH 10%	28480	9100-2257
A10L2	9140-0158	6	1	INDUCTOR RF-CH-MLD 1UH 10%	28480	9140-0158
A10L3	9100-2247	4	3	INDUCTOR RF-CH-MLD 100NH 10%	28480	9100-2247
A10L4	9100-2249	6	2	INDUCTOR RF-CH-MLD 150NH 10%	28480	9100-2249
A10L5	9140-0114	4	12	INDUCTOR RF-CH-MLD 10UH 10%	28480	9140-0114
A10L6	9140-0114	4		INDUCTOR RF-CH-MLD 10UH 10%	28480	9140-0114
A10L7	9140-0210	1	1	INDUCTOR RF-CH-MLD 100UH 5%	28480	9140-0210
A10L8	9100-2573	9	2	INDUCTOR RF-CH-MLD 1MH 10%	28480	9100-2573
A10L9	9100-2573	9		INDUCTOR RF-CH-MLD 1MH 10%	28480	9100-2573
A10L10	9100-2259	8	5	INDUCTOR RF-CH-MLD 1.5UH 10%	28480	9100-2259
A10L11	9100-2259	8		INDUCTOR RF-CH-MLD 1.5UH 10%	28480	9100-2259
A10L12	9100-2259	8		INDUCTOR RF-CH-MLD 1.5UH 10%	28480	9100-2259
A10L13	9140-1059	8	1	COIL 30M/40MH	28480	9140-1059
A10L14	7175-0057	5	2	RESISTOR-ZERO OHMS SOLID TINNED COPPER	28480	7175-0057
A10L15	9140-0114	4		INDUCTOR RF-CH-MLD 10UH 10%	28480	9140-0114
A10L16	9100-2259	8		INDUCTOR RF-CH-MLD 1.5UH 10%	28480	9100-2259
A10L17	9100-2259	8		INDUCTOR RF-CH-MLD 1.5UH 10%	28480	9100-2259
A10L18	9100-2249	6		INDUCTOR RF-CH-MLD 150NH 10%	28480	9100-2249
A10L19	9140-0114	4		INDUCTOR RF-CH-MLD 10UH 10%	28480	9140-0114
A10L20	9140-0114	4		INDUCTOR RF-CH-MLD 10UH 10%	28480	9140-0114
A10L21	9140-0114	4		INDUCTOR RF-CH-MLD 10UH 10%	28480	9140-0114
A10L22	9140-0114	4		INDUCTOR RF-CH-MLD 10UH 10%	28480	9140-0114
A10L23	9140-0114	4		INDUCTOR RF-CH-MLD 10UH 10%	28480	9140-0114
A10L24	9140-0114	4		INDUCTOR RF-CH-MLD 10UH 10%	28480	9140-0114
A10L25	9140-1278	3	4	INDUCTOR 68UH 10% 7.5D-MM Q=45	28480	9140-1278

*** Indicates factory selected value.**

Table 1. A10 Replaceable Parts (5 of 8)

Reference Designator	HP Part Number	C D	Qty.	Description	Mfr Code	Mfr Part Number
A10L26	9140-1278	3		INDUCTOR 68UH 10% 7.5D-MM Q=45	28480	9140-1278
A10L27	9140-0114	4		INDUCTOR RF-CH-MLD 10UH 10%	28480	9140-0114
A10L28	9140-1278	3		INDUCTOR 68UH 10% 7.5D-MM Q=45	28480	9140-1278
A10L29	9140-1278	3		INDUCTOR 68UH 10% 7.5D-MM Q=45	28480	9140-1278
A10L30	9140-0114	4		INDUCTOR RF-CH-MLD 10UH 10%	28480	9140-0114
A10L31	9140-0114	4		INDUCTOR RF-CH-MLD 10UH 10%	28480	9140-0114
A10L32				NOT ASSIGNED		
A10L33	9100-2891	4	5	INDUCTOR RF-CH-MLD 50NH 10%	28480	9100-2891
A10L34	9100-2891	4		INDUCTOR RF-CH-MLD 50NH 10%	28480	9100-2891
A10L35	9100-2891	4		INDUCTOR RF-CH-MLD 50NH 10%	28480	9100-2891
A10L36	9100-2891	4		INDUCTOR RF-CH-MLD 50NH 10%	28480	9100-2891
A10L37	9100-2891	4		INDUCTOR RF-CH-MLD 50NH 10%	28480	9100-2891
A10L38-A10L200				NOT ASSIGNED		
A10L201	9100-2247	4		INDUCTOR RF-CH-MLD 100NH 10%	28480	9100-2247
A10L202	7175-0057	5		RESISTOR-ZERO OHMS SOLID TINNED COPPER	28480	7175-0057
A10L203	9100-2247	4		INDUCTOR RF-CH-MLD 100NH 10%	28480	9100-2247
A10L204	9140-1298	7	1	COIL-VAR 93NH-145NH Q=75 PC-MTG	S4218	E502AN-500005
A10L205	9140-0141	7	2	INDUCTOR RF-CH-MLD 680NH 10%	28480	9140-0141
A10L206	9170-1397	0	1	BEAD INDUCTOR	28480	9170-1397
A10Q1	1854-1073	1	2	TRANSISTOR NPN SI PD=600MW FT=6.5GHZ	28480	1854-1073
	9170-0029	3		CORE-SHIELDING BEAD	28480	9170-0029
	9170-0029	3		CORE-SHIELDING BEAD	28480	9170-0029
A10Q2	1854-1073	1		TRANSISTOR NPN SI PD=600MW FT=6.5GHZ	28480	1854-1073
	9170-0029	3		CORE-SHIELDING BEAD	28480	9170-0029
	9170-0029	3		CORE-SHIELDING BEAD	28480	9170-0029
A10Q3	1854-0632	6	1	TRANSISTOR NPN SI PD=180MW FT=4GHZ	25403	BFR91
A10Q4	1853-0015	7	1	TRANSISTOR PNP SI PD=200MW FT=500MHZ	28480	1853-0015
A10R1	0757-0442	9	8	RESISTOR 10K 1% .125W F TC=0+-100	24546	CT4-1/8-T0-1002-F
A10R2	0698-3156	2	2	RESISTOR 14.7K 1% .125W F TC=0+-100	24546	CT4-1/8-T0-1472-F
A10R3	0757-0280	3	3	RESISTOR 1K 1% .125W F TC=0+-100	24546	CT4-1/8-T0-1001-F
A10R4	0757-0442	9		RESISTOR 10K 1% .125W F TC=0+-100	24546	CT4-1/8-T0-1002-F
A10R5	0757-0280	3		RESISTOR 1K 1% .125W F TC=0+-100	24546	CT4-1/8-T0-1001-F
A10R6	0698-3444	1	3	RESISTOR 316 1% .125W F TC=0+-100	24546	CT4-1/8-T0-316R-F
A10R7	0757-0279	0	2	RESISTOR 3.16K 1% .125W F TC=0+-100	24546	CT4-1/8-T0-3161-F
A10R8	0757-0200	7	1	RESISTOR 5.62K 1% .125W F TC=0+-100	24546	CT4-1/8-T0-5621-F
A10R9	0757-0278	9	1	RESISTOR 1.78K 1% .125W F TC=0+-100	24546	CT4-1/8-T0-1781-F
A10R10	0698-3441	8	1	RESISTOR 215 1% .125W F TC=0+-100	24546	CT4-1/8-T0-215R-F
A10R11	0698-3132	4	6	RESISTOR 261 1% .125W F TC=0+-100	24546	CT4-1/8-T0-2610-F
A10R12	0757-0294	9	3	RESISTOR 17.8 1% .125W F TC=0+-100	19701	5033R-1/8-T0-17R8-F
A10R13	0698-3132	4		RESISTOR 261 1% .125W F TC=0+-100	24546	CT4-1/8-T0-2610-F
A10R14				NOT ASSIGNED		
A10R15	0698-0084	9	1	RESISTOR 2.15K 1% .125W F TC=0+-100	24546	CT4-1/8-T0-2151-F
A10R16	0757-0439	4	1	RESISTOR 6.81K 1% .125W F TC=0+-100	24546	CT4-1/8-T0-6811-F
A10R17	0757-0465	6	2	RESISTOR 100K 1% .125W F TC=0+-100	24546	CT4-1/8-T0-1003-F
A10R18	0757-0442	9		RESISTOR 10K 1% .125W F TC=0+-100	24546	CT4-1/8-T0-1002-F
A10R19	0757-0463	4	1	RESISTOR 82.5K 1% .125W F TC=0+-100	24546	CT4-1/8-T0-8252-F
A10R20	0698-3160	8	4	RESISTOR 31.6K 1% .125W F TC=0+-100	24546	CT4-1/8-T0-3162-F
A10R21	0698-3159	5	1	RESISTOR 26.1K 1% .125W F TC=0+-100	24546	CT4-1/8-T0-2612-F
A10R22	0757-0438	3	1	RESISTOR 5.11K 1% .125W F TC=0+-100	24546	CT4-1/8-T0-5111-F
A10R23	0757-0420	3	2	RESISTOR 750 1% .125W F TC=0+-100	24546	CT4-1/8-T0-751-F
A10R24				NOT ASSIGNED		
A10R25	0757-0421	4	1	RESISTOR 825 1% .125W F TC=0+-100	24546	CT4-1/8-T0-825R-F

*** Indicates factory selected value.**

Table 1. A10 Replaceable Parts (6 of 8)

Reference Designator	HP Part Number	C D	Qty.	Description	Mfr Code	Mfr Part Number
A10R26	0698-7188	8	2	RESISTOR 10 1% .05W F TC=0+-100	24546	C3-1/8-T0-10R-F
A10R27	0757-0420					
A10R28	0698-7188	8		RESISTOR 10 1% .05W F TC=0+-100	24546	C3-1/8-T0-10R-F
A10R29				NOT ASSIGNED		
A10R30				NOT ASSIGNED		
A10R31	0698-3132	4		RESISTOR 261 1% .125W F TC=0+-100	24546	CT4-1/8-T0-2610-F
A10R32	0757-0294	9		RESISTOR 17.8 1% .125W F TC=0+-100	19701	5033R-1/8-T0-17R8-F
A10R33	0698-3132	4		RESISTOR 261 1% .125W F TC=0+-100	24546	CT4-1/8-T0-2610-F
A10R34	0698-3156	2		RESISTOR 14.7K 1% .125W F TC=0+-100	24546	CT4-1/8-T0-1472-F
A10R35	0757-0467	8	1	RESISTOR 121K 1% .125W F TC=0+-100	24546	CT4-1/8-T0-1213-F
A10R36	0757-0441	8	3	RESISTOR 8.25K 1% .125W F TC=0+-100	24546	CT4-1/8-T0-8251-F
A10R37	0757-0459	8	1	RESISTOR 56.2K 1% .125W F TC=0+-100	24546	CT4-1/8-T0-5622-F
A10R38	0698-3160	8		RESISTOR 31.6K 1% .125W F TC=0+-100	24546	CT4-1/8-T0-3162-F
A10R39				NOT ASSIGNED		
A10R40	0757-0441	8		RESISTOR 8.25K 1% .125W F TC=0+-100	24546	CT4-1/8-T0-8251-F
A10R41	0757-0441	8		RESISTOR 8.25K 1% .125W F TC=0+-100	24546	CT4-1/8-T0-8251-F
A10R42	0757-0440	7	1	RESISTOR 7.5K 1% .125W F TC=0+-100	24546	CT4-1/8-T0-7501-F
A10R43	0757-0442	9		RESISTOR 10K 1% .125W F TC=0+-100	24546	CT4-1/8-T0-1002-F
A10R44	0757-0199	3	1	RESISTOR 21.5K 1% .125W F TC=0+-100	24546	CT4-1/8-T0-2152-F
A10R45	0698-3160	8		RESISTOR 31.6K 1% .125W F TC=0+-100	24546	CT4-1/8-T0-3162-F
A10R46	0757-0465	6	1	RESISTOR 100K 1% .125W F TC=0+-100	24546	CT4-1/8-T0-1003-F
A10R47	0757-0280	3		RESISTOR 1K 1% .125W F TC=0+-100	24546	CT4-1/8-T0-1001-F
A10R48	0757-0395		1	RESISTOR 31.6 1% .125W F TC=0+-100	28480	0757-0180
A10R49	0757-0277	8	5	RESISTOR 49.9 1% .125W F TC=0+-100	28480	0757-0277
A10R50	0757-0346	2	4	RESISTOR 10 1% .125W F TC=0+-100	28480	0757-0346
A10R51	0757-0399	5		RESISTOR 82.5 1% .125W F TC=0+-100	24546	CT4-1/8-T0-82R5-F
A10R52	0757-0280	3		RESISTOR 1K 1% .125W F TC=0+-100	24546	CT4-1/8-T0-1001-F
A10R53	0757-0279	0		RESISTOR 3.16K 1% .125W F TC=0+-100	24546	CT4-1/8-T0-3161-F
A10R54	0757-0418	9		RESISTOR 619 1% .125W F TC=0+-100	24546	CT4-1/8-T0-619R-F
A10R55	0698-3444	1		RESISTOR 316 1% .125W F TC=0+-100	24546	CT4-1/8-T0-316R-F
A10R56	0757-0277	8		RESISTOR 49.9 1% .125W F TC=0+-100	28480	0757-0277
A10R57	0757-0401	0		RESISTOR 100 1% .125W F TC=0+-100	24546	CT4-1/8-T0-101-F
A10R58	0757-1094	9	1	RESISTOR 1.47K 1% .125W F TC=0+-100	24546	CT4-1/8-T0-1471-F
A10R59	0698-3153	9		RESISTOR 3.83K 1% .125W F TC=0+-100	24546	CT4-1/8-T0-3831-F
A10R60	0698-3388	2	3	RESISTOR 14.7 1% .5W F TC=0+-100	28480	0698-3388
A10R61	0698-4037	0	1	RESISTOR 46.4 1% .125W F TC=0+-100	28480	0698-4037
A10R62	0757-0399	5		RESISTOR 82.5 1% .125W F TC=0+-100	24546	CT4-1/8-T0-82R5-F
A10R63	0698-3388	2		RESISTOR 14.7 1% .5W F TC=0+-100	28480	0698-3388
A10R64	0698-3388	2		RESISTOR 14.7 1% .5W F TC=0+-100	28480	0698-3388
A10R65	0757-0442	9		RESISTOR 10K 1% .125W F TC=0+-100	24546	CT4-1/8-T0-1002-F
A10R66	0698-3444	1		RESISTOR 316 1% .125W F TC=0+-100	24546	CT4-1/8-T0-316R-F
A10R67	0757-0416	7	2	RESISTOR 511 1% .125W F TC=0+-100	24546	CT4-1/8-T0-511R-F
A10R68	0757-0417	8	6	RESISTOR 562 1% .125W F TC=0+-100	24546	CT4-1/8-T0-562R-F
A10R69	0757-0417	8		RESISTOR 562 1% .125W F TC=0+-100	24546	CT4-1/8-T0-562R-F
A10R70	0757-0277	8		RESISTOR 49.9 1% .125W F TC=0+-100	28480	0757-0277
A10R71	0757-0417	8		RESISTOR 562 1% .125W F TC=0+-100	24546	CT4-1/8-T0-562R-F
A10R72	0757-0417	8		RESISTOR 562 1% .125W F TC=0+-100	24546	CT4-1/8-T0-562R-F
A10R73	0757-0417	8		RESISTOR 562 1% .125W F TC=0+-100	24546	CT4-1/8-T0-562R-F
A10R74	0757-0277	8		RESISTOR 49.9 1% .125W F TC=0+-100	28480	0757-0277
A10R75	0757-0417	8		RESISTOR 562 1% .125W F TC=0+-100	24546	CT4-1/8-T0-562R-F
A10R76	8159-0005	0	1	RESISTOR-ZERO OHMS 22 AWG LEAD DIA	28480	8159-0005
A10R77	0698-3132	4		RESISTOR 261 1% .125W F TC=0+-100	24546	CT4-1/8-T0-2610-F
A10R78	0757-0400	9	1	RESISTOR 90.9 1% .125W F TC=0+-100	24546	CT4-1/8-T0-90R9-F

*** Indicates factory selected value.**

Table 1. A10 Replaceable Parts (7 of 8)

Reference Designator	HP Part Number	C D	Qty.	Description	Mfr Code	Mfr Part Number
A10R79	0757-0399	5		RESISTOR 82.5 1% .125W F TC=0+-100	24546	CT4-1/8-T0-82R5-F
A10R80	0698-3132	4		RESISTOR 261 1% .125W F TC=0+-100	24546	CT4-1/8-T0-2610-F
A10R81	0757-0294	9		RESISTOR 17.8 1% .125W F TC=0+-100	19701	5033R-1/8-T0-17R8-F
A10R82	0757-0416	7		RESISTOR 511 1% .125W F TC=0+-100	24546	CT4-1/8-T0-511R-F
A10R83-A10R200				NOT ASSIGNED		
A10R201	0757-0401	0		RESISTOR 100 1% .125W F TC=0+-100	24546	CT4-1/8-T0-101-F
A10R202	0757-0346	2		RESISTOR 10 1% .125W F TC=0+-100	28480	0757-0346
A10R203	0757-0346	2		RESISTOR 10 1% .125W F TC=0+-100	28480	0757-0346
A10R204	0757-0346	2		RESISTOR 10 1% .125W F TC=0+-100	28480	0757-0346
A10R205-A10R207				NOT ASSIGNED		
A10R208	0698-3162	0	1	RESISTOR 46.4K 1% .125W F TC=0+-100	24546	CT4-1/8-T0-4642-F
A10R209	0698-3438	3	1	RESISTOR 147 1% .125W F TC=0+-100	24546	CT4-1/8-T0-147R-F
A10R210	0757-0401	0		RESISTOR 100 1% .125W F TC=0+-100	24546	CT4-1/8-T0-101-F
A10R211	0757-0442	9		RESISTOR 10K 1% .125W F TC=0+-100	24546	CT4-1/8-T0-1002-F
A10R212				NOT ASSIGNED		
A10R213	0757-0442	9		RESISTOR 10K 1% .125W F TC=0+-100	24546	CT4-1/8-T0-1002-F
A10R214	0757-0442	9		RESISTOR 10K 1% .125W F TC=0+-100	24546	CT4-1/8-T0-1002-F
A10R215-A10R219				NOT ASSIGNED		
A10R220	0698-0082	7	1	RESISTOR 464 1% .125W F TC=0+-100	24546	CT4-1/8-T0-4640-F
A10U1	1826-1316	6	1	IC LT 1007C-N8		
A10U2	1826-1310	0	4	IC RF/IF AMPL WB 4-DIP-P PKG	28480	1826-1310
A10U3	1826-1310	0		IC RF/IF AMPL WB 4-DIP-P PKG	28480	1826-1310
A10U4	1826-0275	4	3	IC 78L12A V RGLTR TO-92	04713	MC78L12ACP
A10U5	1826-0521	3	1	IC OP AMP LOW-BIAS-H-IMPD DUAL 8-DIP-P	01295	TL072CP
A10U6	1826-1311	1	1	IC RF/IF AMPL WB 4-DIP-P PKG	28480	1826-1311
A10U7	1826-1310	0		IC RF/IF AMPL WB 4-DIP-P PKG	28480	1826-1310
A10U8	1820-3348	6	1	IC CNTR TTL F BIN SYNCHRO POS-EDGE-TRIG	07263	74F163APC
A10U9	1820-1429	0	3	IC CNTR TTL LS DECD SYNCHRO	01295	SN74LS160AN
A10U10	1820-1429	0		IC CNTR TTL LS DECD SYNCHRO	01295	SN74LS160AN
A10U11	1820-1429	0		IC CNTR TTL LS DECD SYNCHRO	01295	SN74LS160AN
A10U12	1820-2691	0	1	IC FF TTL F D-TYPE POS-EDGE-TRIG	07263	74F74PC
A10U13	1826-0221	0	1	IC V RGLTR TO-220	04713	MC7912CT
A10U14	1820-1074	1	1	IC DRVR TTL NOR QUAD 2-INP	01295	SN74128N
A10U15	1826-0122	0	2	IC 7805 V RGLTR TO-220	07263	7805UC
A10U16	1826-0147	9	1	IC 7812 V RGLTR TO-220	04713	MC7812CP
A10U17	1826-1310	0		IC RF/IF AMPL WB 4-DIP-P PKG	28480	1826-1310
A10U18	1820-1888	5	1	IC PRESCR ECL	04713	MC12013L
A10U19	1820-0817	8	1	IC FF ECL D-M/S DUAL	04713	MC10131P
A10U20	1826-0122	0		IC 7805 V RGLTR TO-220	07263	7805UC
A10U21	1826-0847	6	1	IC V RGLTR-V-REF-FXD 4.97/5.02V 8-DIP-P	28480	1826-0847
A10U22	1826-0275	4		IC 78L12A V RGLTR TO-92	04713	MC78L12ACP
A10U23	1826-0282	3	1	IC V RGLTR TO-92	04713	MC79L12ACP
A10U24	1826-0275	4		IC 78L12A V RGLTR TO-92	04713	MC78L12ACP
A10U25	1826-1690	9	1	IC LT 1022 ACH		
A10W1	1258-0141	8	1	JUMPER-REMOVABLE FOR 0.025 IN SQ PINS	28480	1258-0141
A10W2	04194-61621	6	1	CABLE ASSEMBLY	28480	04194-61621
A10Y1	0410-1574	6	1	CRYSTAL-QUARTZ 80.0000 MHZ HC-43/U-HLDR	28480	0410-1574

*** Indicates factory selected value.**

Table 1. A10 Replaceable Parts (8 of 8)

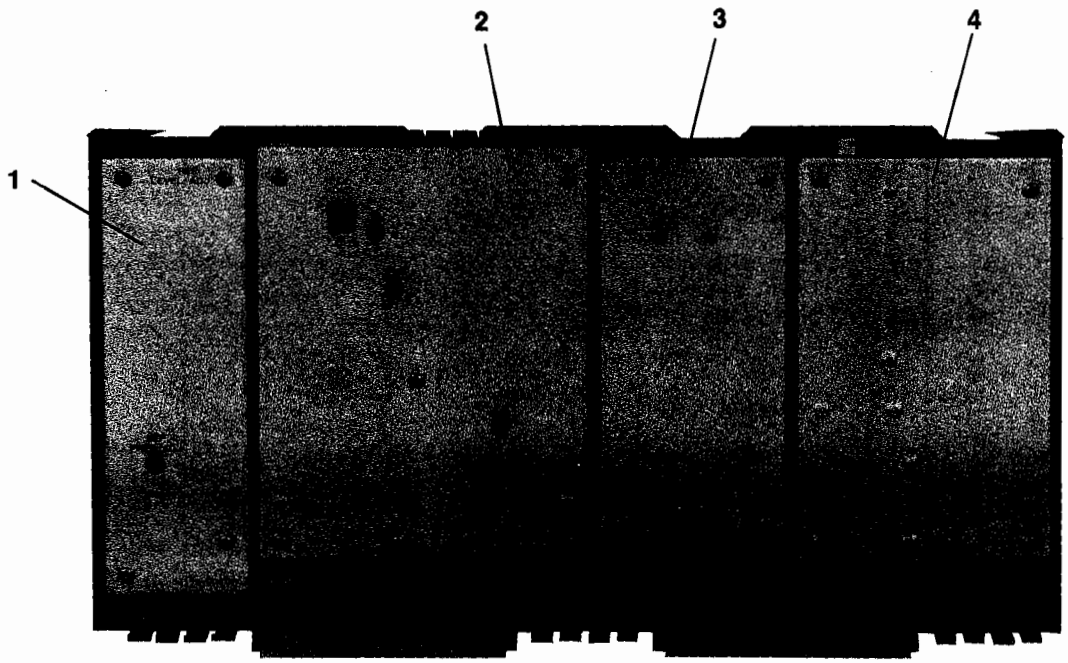

Reference Designator	HP Part Number	Qty.	Description
1	04195-00615	1	Case Shield, Component Side
	04195-00622	1	Case Shield, Circuit Side
2	04195-00616	1	Case Shield, Component Side
	8160-0619	1	Gasket Shield
	04195-00621	1	Case Shield, Circuit Side
3	04195-00617	1	Case Shield, Component Side
	04195-20001	1	Heat Sink
	4040-1907	1	Heat Sink Rubber
	0515-1550	1	Screw Pan-Head
	04195-00620	1	Case Shield, Circuit Side
4	04195-00618	1	Case Shield, Component Side
	04195-00619	1	Case Shield, Circuit Side

NOTES

Table 2. Connector Pin Assignments

A10J5 (XR)

	a	b	c	
1				1
2		FN1-VCO	FN1-VCO	2
3				3
4	+7.5 V	+7.5 V	+7.5 V	4
5				5
6				6
7				7
8				8
9				9
10				10
11				11
12		VCO/40	VCO/40	12
13				13
14	$\overline{\text{FN-UNLOCK}}$			14
15				15
16				16
17				17
18				18
19				19
20				20
21				21
22				22
23	FN-ECLK	FN-INV		23
24	FN-D2	FN-D1	FN-D0	24
25			FN-D3	25
26				26
27				27
28			$\overline{\text{IORESET B}}$	28
29				29
30				30
31				31
32				32

A10J4 (XL)

	a	b	c	
1				1
2				2
3				3
4	+7.5 V	+7.5 V	+7.5 V	4
5	+16.5 V	+16.5 V	+16.5 V	5
6				6
7	-16.5 V	-16.5 V	-16.5 V	7
8				8
9				9
10				10
11				11
12				12
13				13
14		2M-CLK	2M-CLK	14
15				15
16				16
17				17
18				18
19		100K-REF	100K-REF	19
20				20
21		80MHz	80MHz	21
22				22
23		EXT-REF-IN	EXT-REF-IN	23
24				24
25		10M-CLK	10M-CLK	25
26				26
27		80M-CLK	80M-CLK	27
28				28
29		20M-CLK	$\overline{\text{EXT-REF}}$	29
30			$\overline{\text{EXT-UNLK}}$	30
31				31
32				32

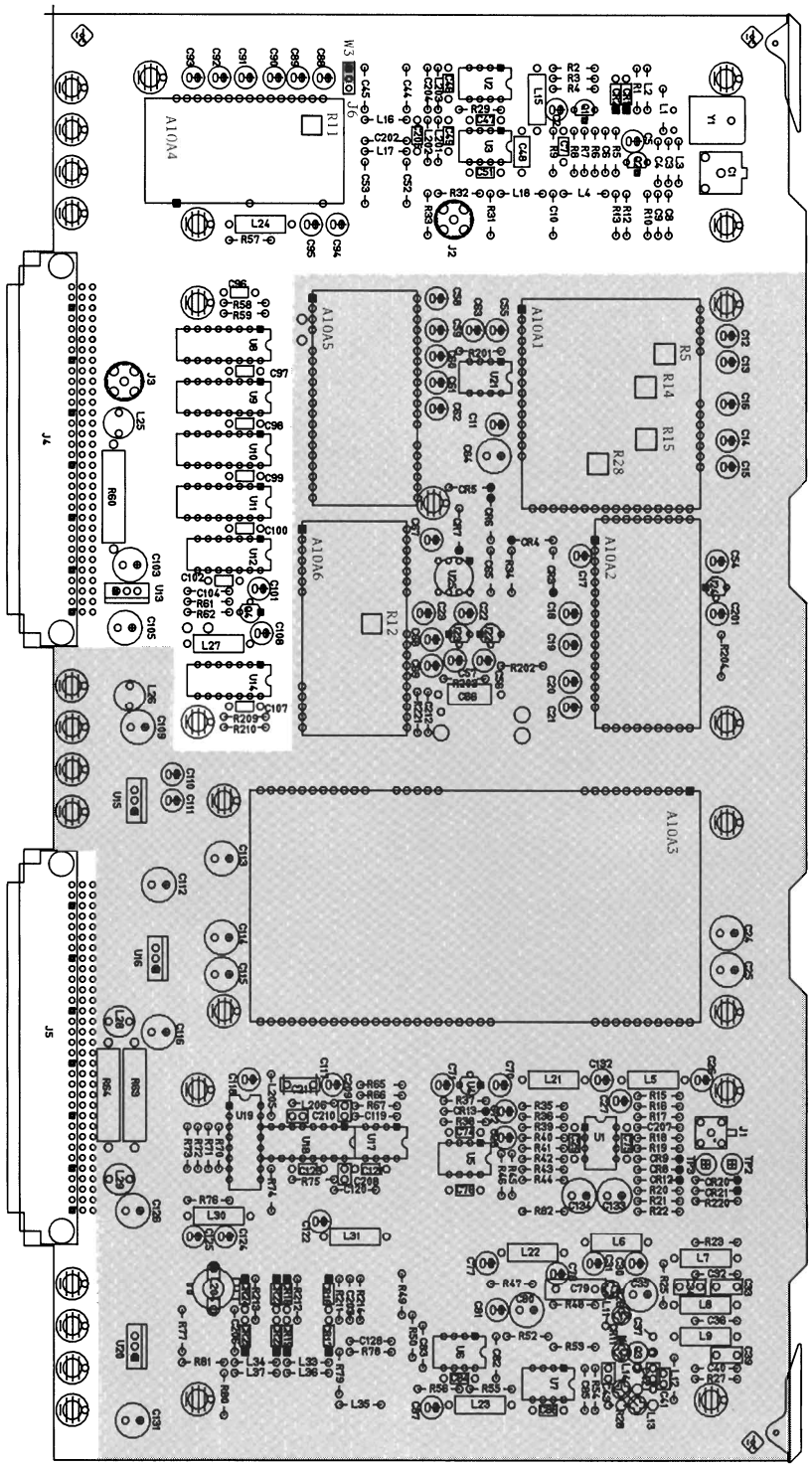

A10 Frequency Generator Component Locations

A10 FREQUENCY GENERATOR 1 of 4

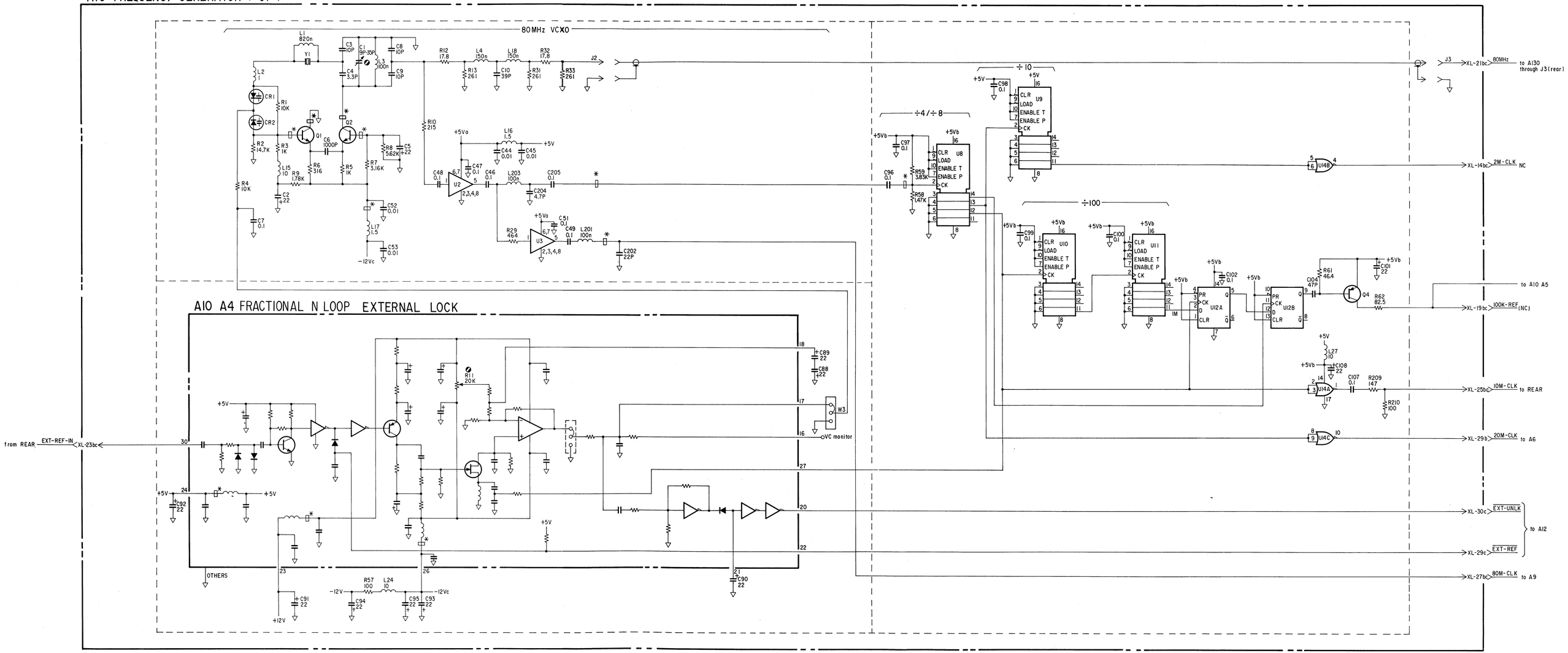

NOTES:

1. REFERENCE DESIGNATORS WITHIN THIS ASSEMBLY ARE ABBREVIATED. PREFIX ABBREVIATION WITH ASSEMBLY NUMBER FOR COMPLETE REFERENCE DESIGNATOR.

2. UNLESS OTHERWISE INDICATED:

   RESISTANCE IN OHMS (Ω)
   CAPACITANCE IN MICROFARADS (µF)
   INDUCTANCE IN MICROHENRIES (µH)

3. ADJUSTMENT NAMES

A10C1	REF LEVEL ADJ
A10A4R11	REF FREQ ADJ

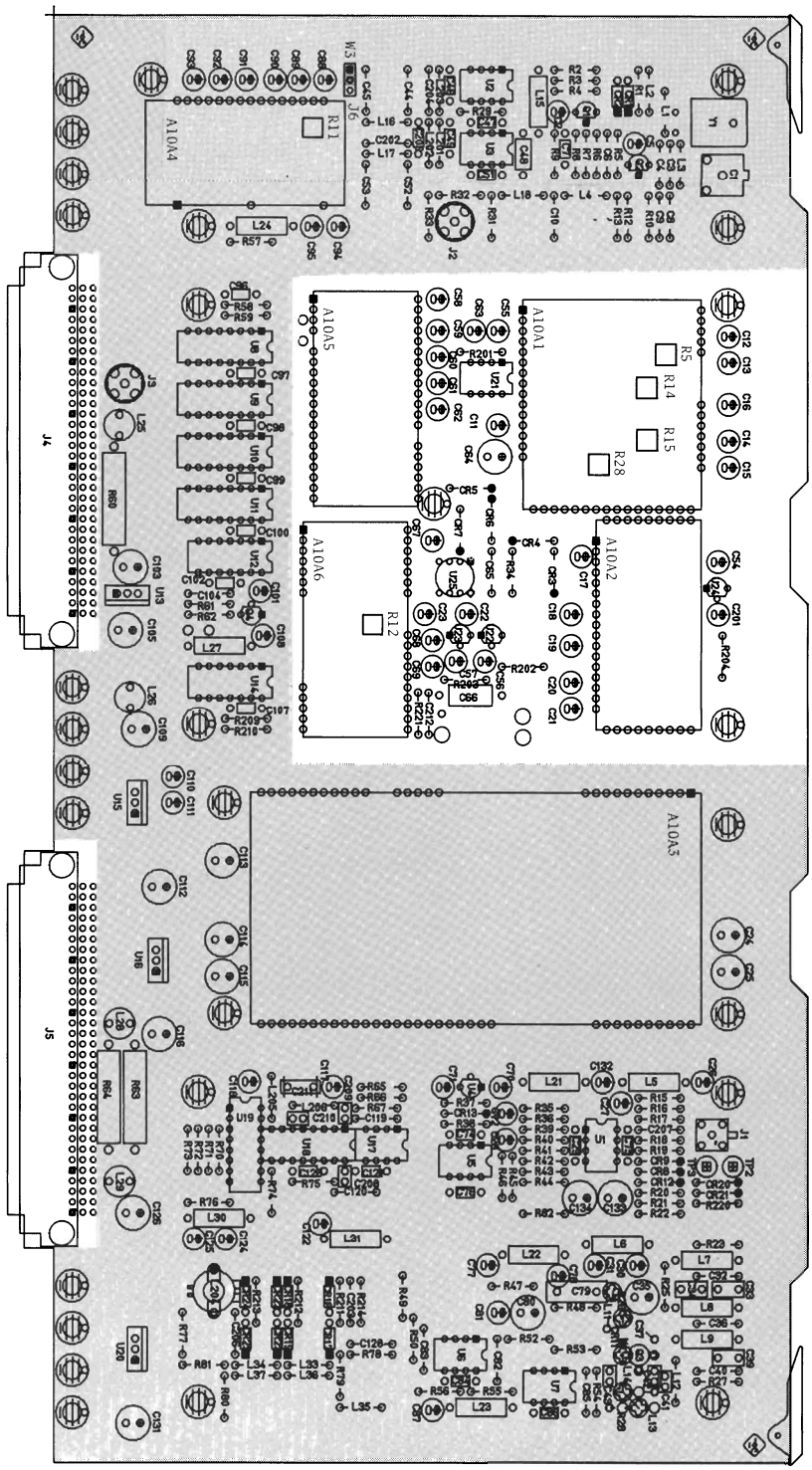

A10 Frequency Generator Component Locations

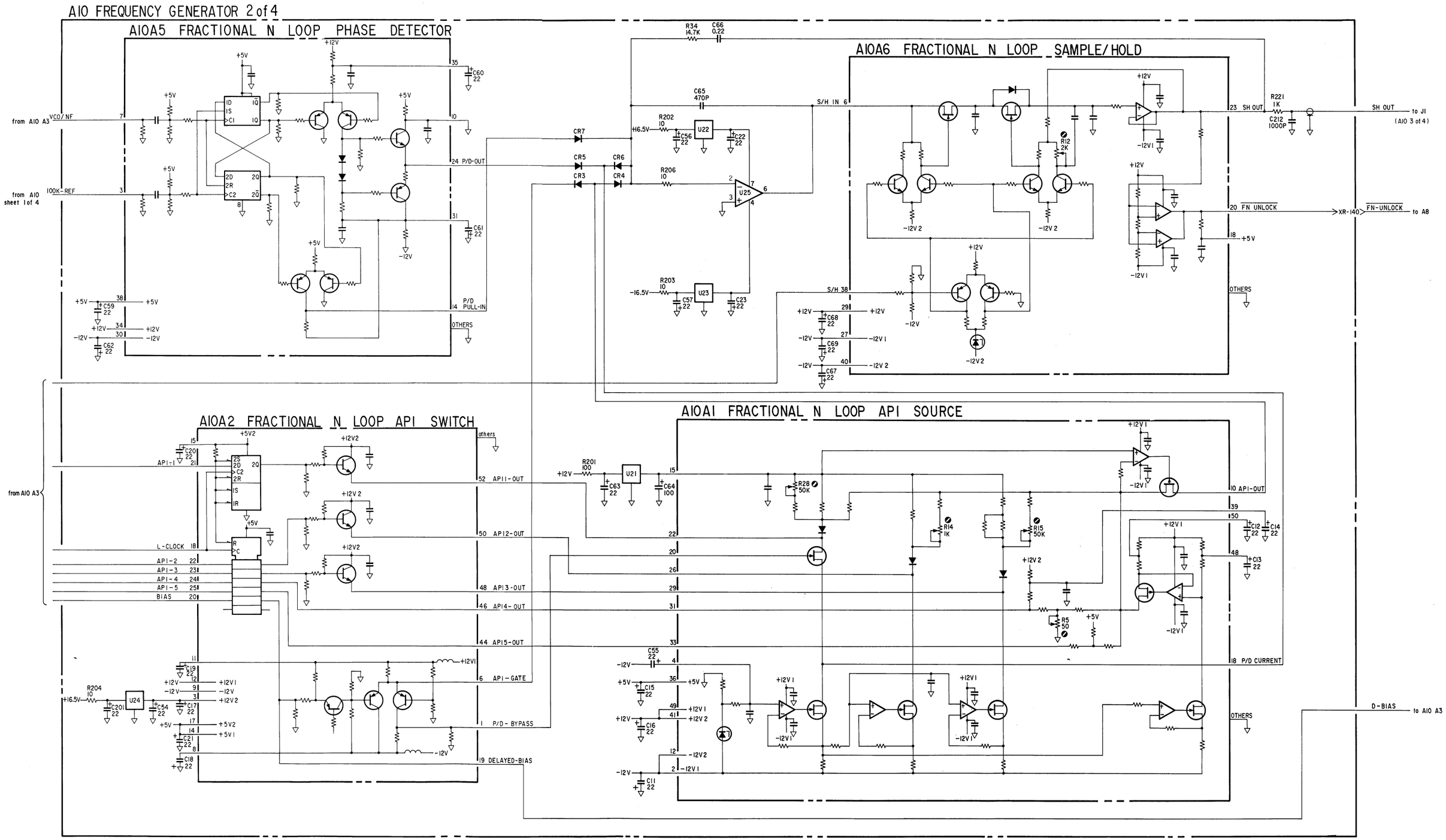
A10 FREQUENCY GENERATOR 2 of 4
A10A5 FRACTIONAL N LOOP PHASE DETECTOR
A10A6 FRACTIONAL N LOOP SAMPLE/HOLD
A10A2 FRACTIONAL N LOOP API SWITCH
A10A1 FRACTIONAL N LOOP API SOURCE
from A10 A3
VCO/NF
from A10 sheet 1 of 4
100K-REF
P/D-OUT
P/D PULL-IN
OTHERS
S/H IN
SH OUT
to J1 (A10 3 of 4)
FN UNLOCK
XR-140
FN-UNLOCK
to A8
API-1
L-CLOCK
API-2
API-3
API-4
API-5
BIAS
API1-OUT
API2-OUT
API3-OUT
API4-OUT
API5-OUT
API-GATE
P/D-BYPASS
DELAYED-BIAS
API-OUT
P/D CURRENT
D-BIAS
to A10 A3

NOTES:

1. REFERENCE DESIGNATORS WITHIN THIS ASSEMBLY ARE ABBREVIATED. PREFIX ABBREVIATION WITH ASSEMBLY NUMBER FOR COMPLETE REFERENCE DESIGNATOR.

2. UNLESS OTHERWISE INDICATED:

   RESISTANCE IN OHMS (Ω)
   CAPACITANCE IN MICROFARADS (μF)
   INDUCTANCE IN MICROHENRIES (μH)

3. ADJUSTMENT NAMES

A10A1R5	API 4 ADJ
A10A1R14	API 2 ADJ
A10A1R15	API 3 ADJ
A10A1R28	API 1 ADJ
A10A6R12	100kHz NULL ADJ

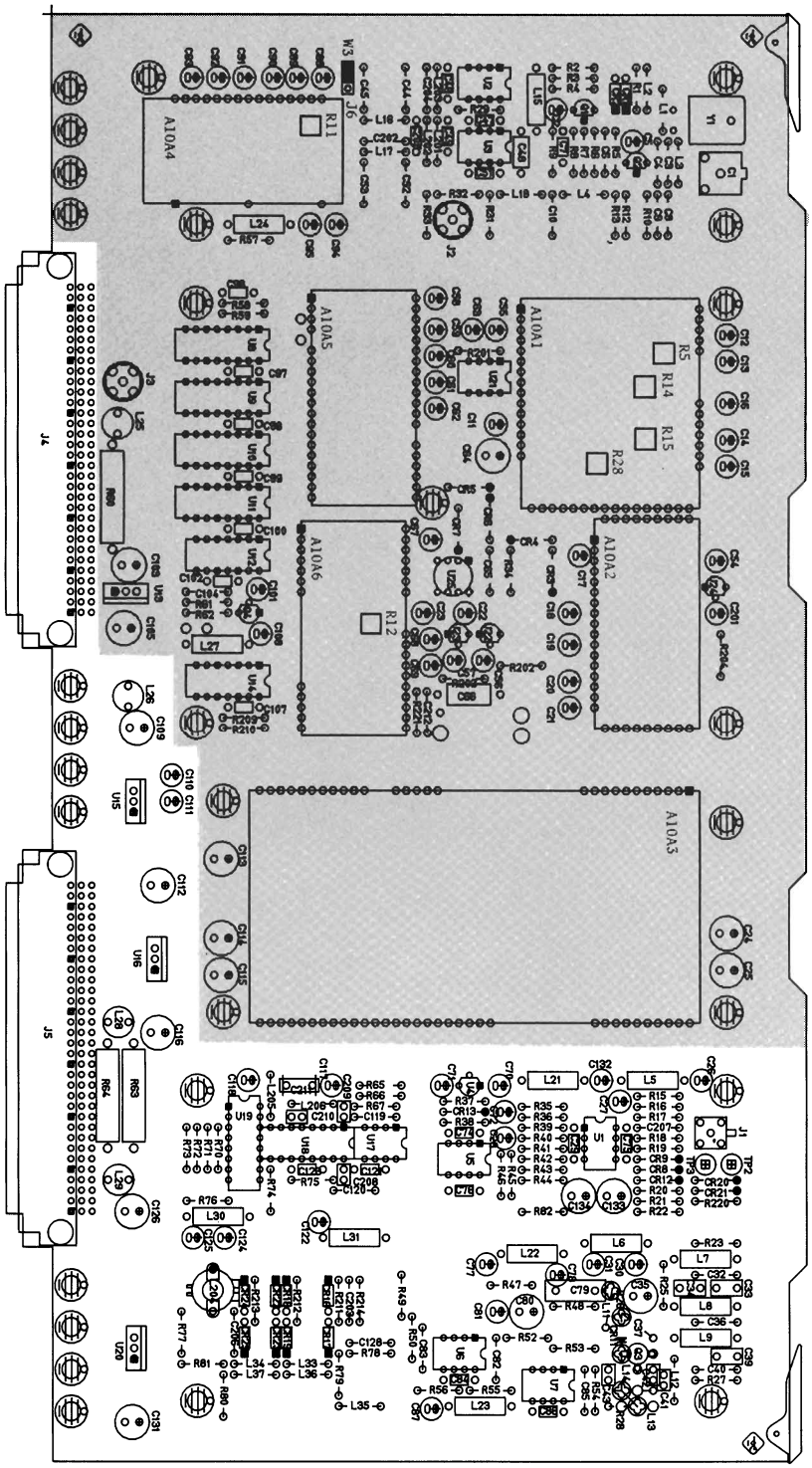

A10 Frequency Generator Component Locations

A10 FREQUENCY GENERATOR 3of4

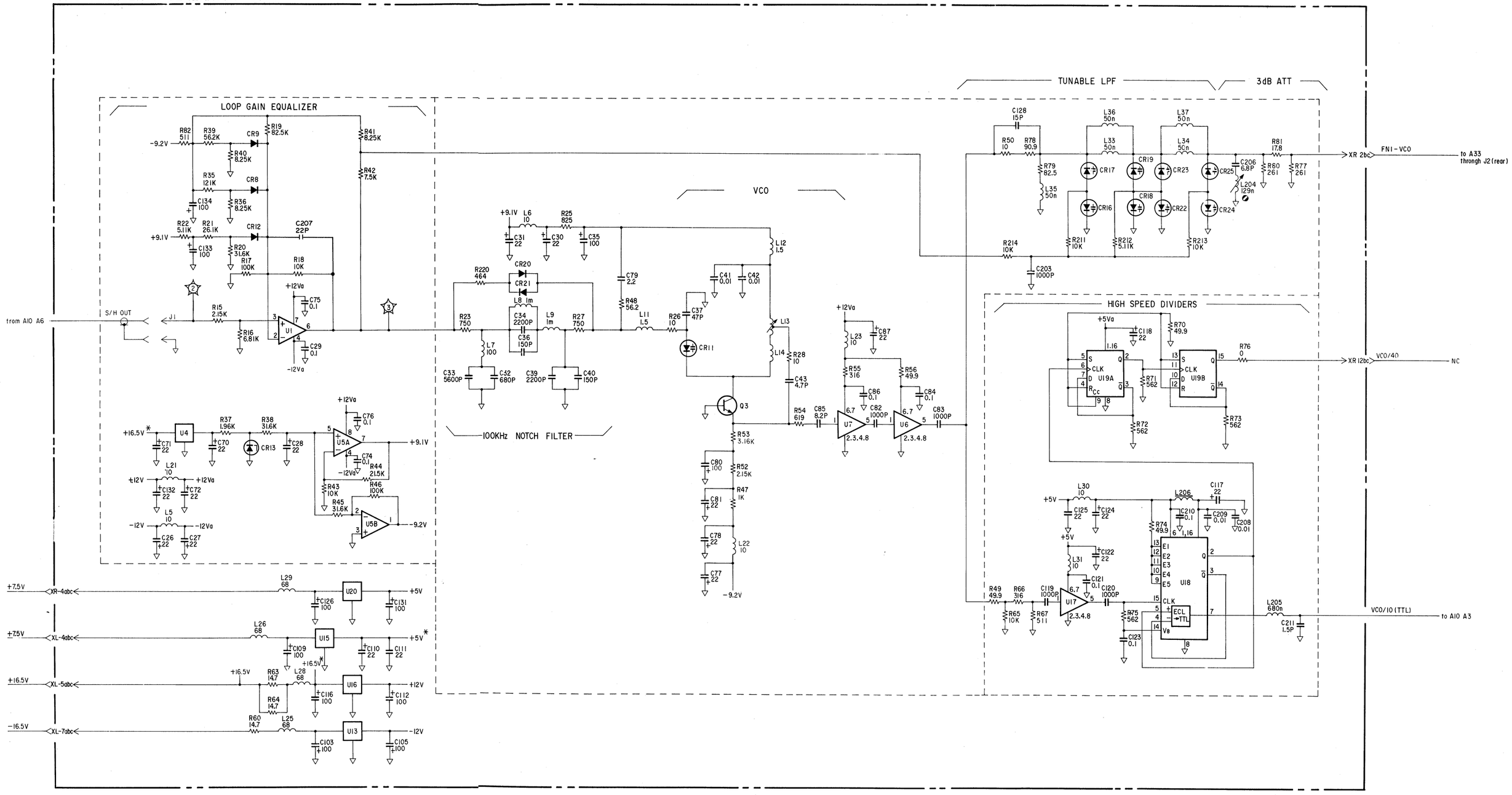

NOTES:

1. REFERENCE DESIGNATORS WITHIN THIS ASSEMBLY ARE ABBREVIATED. PREFIX ABBREVIATION WITH ASSEMBLY NUMBER FOR COMPLETE REFERENCE DESIGNATOR.

2. UNLESS OTHERWISE INDICATED:

   RESISTANCE IN OHMS (Ω)
   CAPACITANCE IN MICROFARADS (μF)
   INDUCTANCE IN MICROHENRIES (μH)

3. ADJUSTMENT NAMES

   A10L204 160MHz NULL ADJ

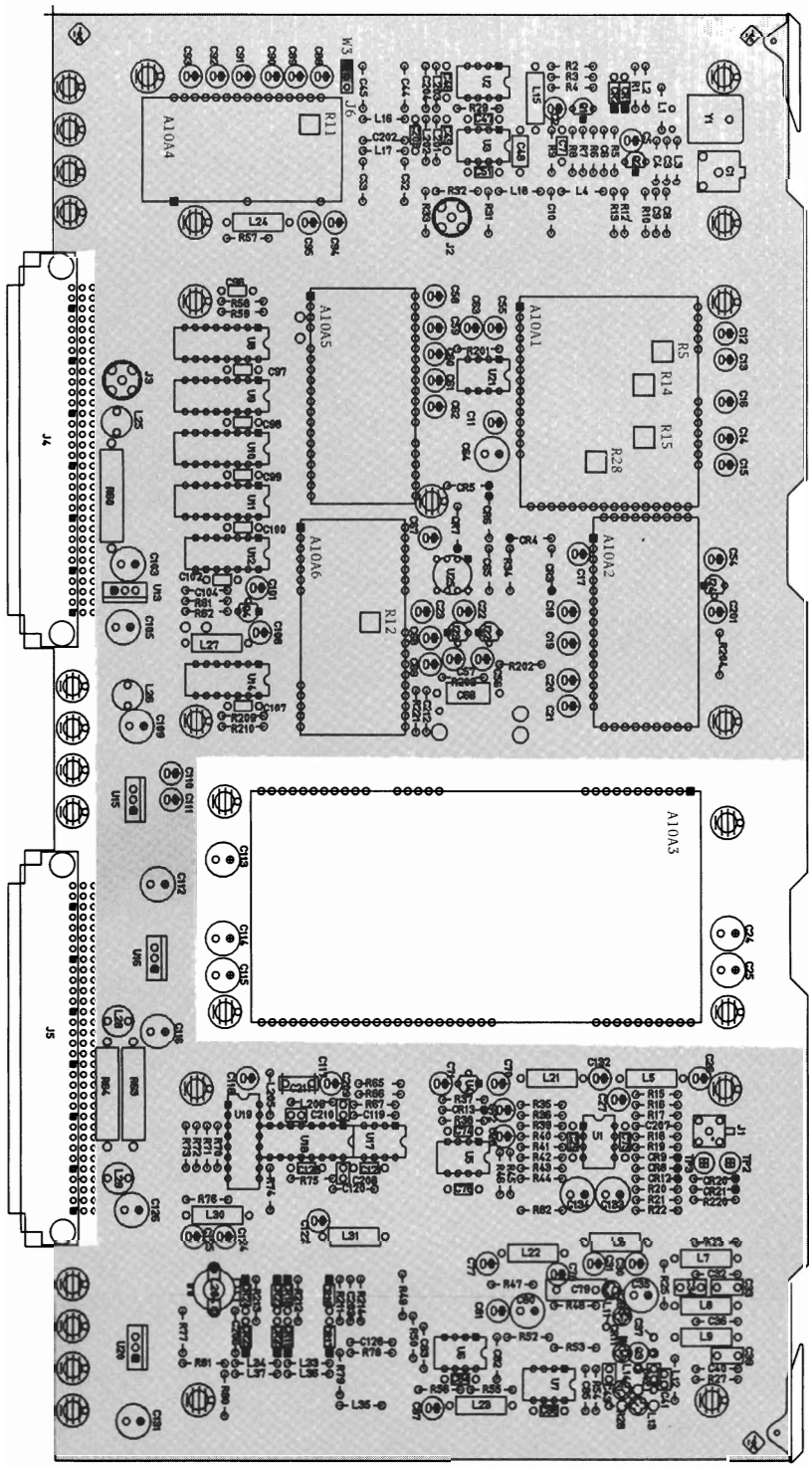

A10 Frequency Generator Component Locations

A10 FREQUENCY GENERATOR 4 of 4

A10 A3 FRACTIONAL N LOOP CONTROL LOGIC

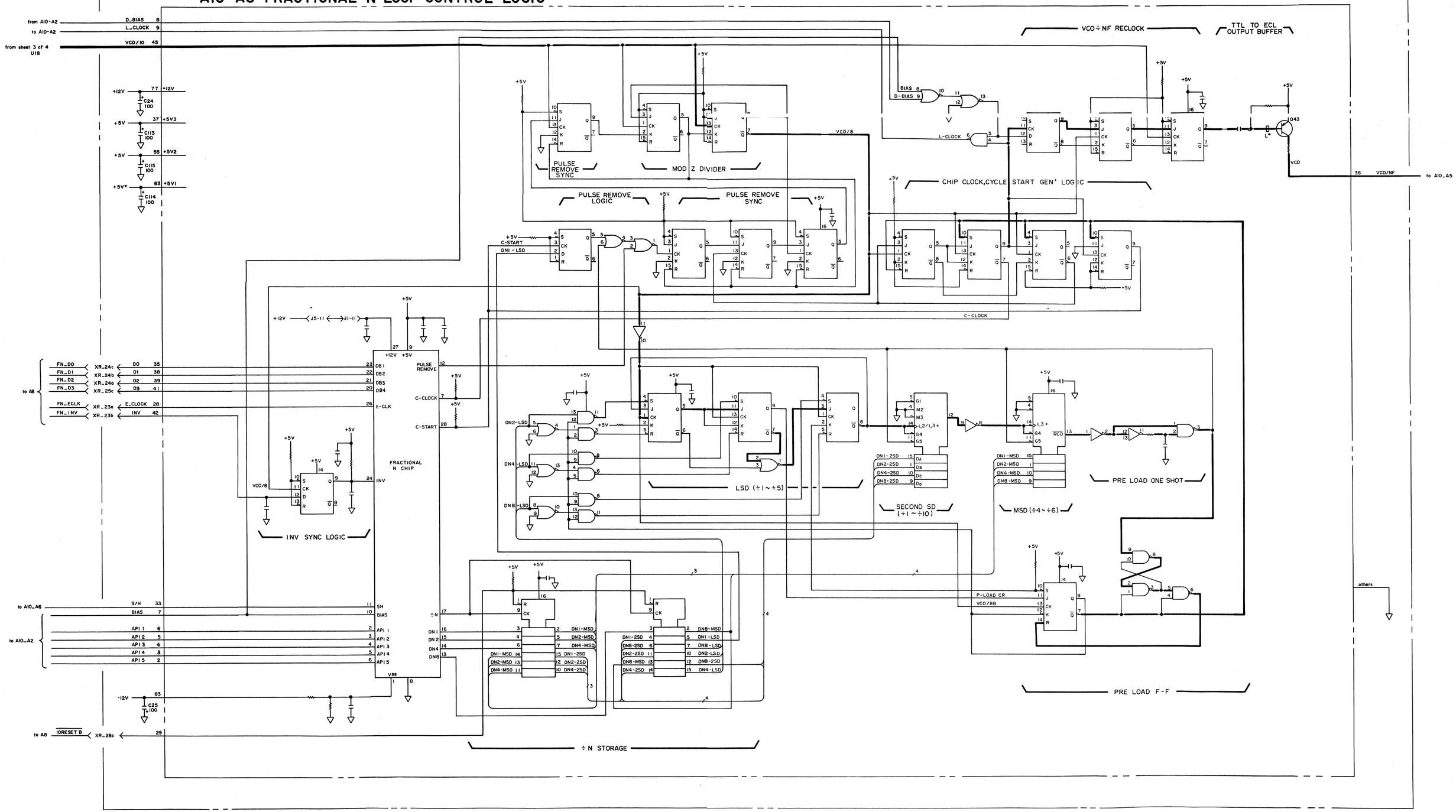

CONTROL UNIT KEYBOARD SERVICE SHEET

The control unit keyboard consists of A12 (keyboard control), and A13 (control unit keyboard). Keys, LED indicators, and a RPG (rotary pulse generator) are on A13. A12 interfaces A6 to A13.

TROUBLESHOOTING GUIDE:

1. Service Function No. 120:

Service Function No. 120 is the Keyboard Test function. This test can be used to check the RPG and all front panel keys. The details of the Service Functions are described in Appendix B. To perform the keyboard test, refer to Appendix B.

2. Service Function No. 121:

Service Function No. 121 is the LED Indicator Test. This test checks the controllability of all LEDs. To perform the LED indicator test, refer to Appendix B.

Table 1. A12 Replaceable Parts (1 of 2)

Reference Designator	HP Part Number	C D	Qty.	Description	Mfr Code	Mfr Part Number
A12				CONTROL UNIT KEYBOARD CONTROL		
A12	04195-66512	5	1	KEY CONTROL BD'Y	28480	04195-66512
A12C1	0160-6561	0	12	CAPACITOR-FXD .1UF +-20% 50VDC CER	16299	CAC02Z5U104M050A
A12C2	0160-6561	0		CAPACITOR-FXD .1UF +-20% 50VDC CER	16299	CAC02Z5U104M050A
A12C3	0180-0197	8	1	CAPACITOR-FXD 2.2UF+-10% 20VDC TA	56289	150D225X9020A2
A12C4	0160-6561	0		CAPACITOR-FXD .1UF +-20% 50VDC CER	16299	CAC02Z5U104M050A
A12C5	0160-6561	0		CAPACITOR-FXD .1UF +-20% 50VDC CER	16299	CAC02Z5U104M050A
A12C6	0160-6561	0		CAPACITOR-FXD .1UF +-20% 50VDC CER	16299	CAC02Z5U104M050A
A12C7	0160-6561	0		CAPACITOR-FXD .1UF +-20% 50VDC CER	16299	CAC02Z5U104M050A
A12C8	0160-6561	0		CAPACITOR-FXD .1UF +-20% 50VDC CER	16299	CAC02Z5U104M050A
A12C9	0160-6561	0		CAPACITOR-FXD .1UF +-20% 50VDC CER	16299	CAC02Z5U104M050A
A12C10	0160-6561	0		CAPACITOR-FXD .1UF +-20% 50VDC CER	16299	CAC02Z5U104M050A
A12C11	0160-6561	0		CAPACITOR-FXD .1UF +-20% 50VDC CER	16299	CAC02Z5U104M050A
A12C12	0160-6561	0		CAPACITOR-FXD .1UF +-20% 50VDC CER	16299	CAC02Z5U104M050A
A12C13	0160-6561	0		CAPACITOR-FXD .1UF +-20% 50VDC CER	16299	CAC02Z5U104M050A
A12C14	0180-1085	5	3	CAPACITOR-FXD 4.7UF 16VDC TA	28480	0180-1085
A12C15	0180-1085	5		CAPACITOR-FXD 4.7UF 16VDC TA	28480	0180-1085
A12C16	0180-1085	5		CAPACITOR-FXD 4.7UF 16VDC TA	28480	0180-1085
A12C17	0180-3217	9	1	CAPACITOR-FXD 470UF+-20% 6.3VDC AL	28480	0180-3217
A12J1	1252-1598	9	1	CONN-POST TYPE 2.54-PIN-SPCG 96-CONT	09922	PI96B30P00F50N9
A12J2	1251-3004	4	1	CONN-POST TYPE .100-PIN-SPCG 40-CONT	28480	1251-3004
A12L1	9170-1397	0	2	BEAD INDUCTOR	28480	9170-1397
A12Q1	1854-0810	2	2	TRANSISTOR NPN SI PD=625MW FT=200MHZ	28480	1854-0810
A12Q2	1854-0810	2		TRANSISTOR NPN SI PD=625MW FT=200MHZ	28480	1854-0810
A12Q3	1853-0459	3	2	TRANSISTOR PNP SI PD=625MW FT=200MHZ	28480	1853-0459
A12Q4	1853-0459	3		TRANSISTOR PNP SI PD=625MW FT=200MHZ	28480	1853-0459
A12R1	0698-3452	1	1	RESISTOR 147K 1% .125W F TC=0+-100	24546	CT4-1/8-T0-2151-F
A12R2	0698-3153	9	1	RESISTOR 3.83K 1% .125W F TC=0+-100	24546	CT4-1/8-T0-3831-F
A12R3	0698-3446	9	3	RESISTOR 3.83 1% .125W F TC=0+-100	24546	CT4-1/8-T0-383R-F
A12R4	0757-0442	9	2	RESISTOR 10K 1% .125W F TC=0+-100	24546	CT4-1/8-T0-1002-F
A12R5	0757-0465	6	1	RESISTOR 100K 1% .125W F TC=0+-100	24546	CT4-1/8-T0-1003-F
A12R6	0698-0084	9	1	RESISTOR 2.15K 1% .125W F TC=0+-100	24546	CT4-1/8-T0-2151-F
A12R7	0757-0442	9		RESISTOR 10K 1% .125W F TC=0+-100	24546	CT4-1/8-T0-1002-F
A12R8	1810-0279	5	1	NETWORK-RES 10-SIP 4.7K OHM X 9	91637	CSC10A01-472G
A12R9	0757-0419	0	3	RESISTOR 681 1% .125W F TC=0+-100	24546	CT4-1/8-T0-681R-F
A12R10	1810-0269	3	1	NETWORK-RES 9-SIP 10.0K OHM X 8	28480	1810-0269
A12R11	1810-0325	2	1	NETWORK-RES 16-DIP 150.0 OHM X 8	11236	761-3-R150
A12R12	0698-3430	5	2	RESISTOR 21.5 1% .125W F TC=0+-100	03888	PME55-1/8-T0-21R5-F
A12R13	0698-3160	8	2	RESISTOR 31.6K 1% .125W F TC=0+-100	24546	CT4-1/8-T0-3162-F
A12R14	0698-3430	5		RESISTOR 21.5 1% .125W F TC=0+-100	03888	PME55-1/8-T0-21R5-F
A12R15	0698-3160	8		RESISTOR 31.6K 1% .125W F TC=0+-100	24546	CT4-1/8-T0-3162-F
A12R16	0757-0419	0		RESISTOR 681 1% .125W F TC=0+-100	24546	CT4-1/8-T0-681R-F
A12R17	0757-0419	0		RESISTOR 681 1% .125W F TC=0+-100	24546	CT4-1/8-T0-681R-F
A12R18	0698-3438	3	2	RESISTOR 147 1% .125W F TC=0+-100	24546	CT4-1/8-T0-147R-F
A12R19	0757-1094	9	2	RESISTOR 1.47K 1% .125W F TC=0+-100	24546	CT4-1/8-T0-1471-F
A12R20	0698-3438	3		RESISTOR 147 1% .125W F TC=0+-100	24546	CT4-1/8-T0-147R-F
A12R21	0757-1094	9		RESISTOR 1.47K 1% .125W F TC=0+-100	24546	CT4-1/8-T0-1471-F
A12SP1	9164-0262	3	1	BUZZER	28480	9164-0262

*** Indicates factory selected value.**

Table 1. A12 Replaceable Parts (2 of 2)

Reference Designator	HP Part Number	C D	Qty.	Description	Mfr Code	Mfr Part Number
A12U1	1820-1445	0	1	IC LCH TTL LS 4-BIT	01295	SN74LS375N
A12U2	1820-1478	9	1	IC CNTR TTL LS BIN ASYNCHRO	01295	SN74LS93N
A12U3	1820-1423	4	1	IC MV TTL LS MONOSTBL RETRIG DUAL	01295	SN74LS123N
A12U4	1820-3100	8	2	IC DCDR TTL ALS BIN 3-TO-8-LINE 3-INP	01295	SN74ALS138N
A12U5	04194-80008	3	1	PAL 10H8	28480	04194-80008
A12U6	04194-80007	2	1	PAL 16R6L	28480	04194-80007
A12U7	1820-3505	7	1	IC CNTR TTL ALS DECD UP/DOWN SYNCHRO	01295	SN74ALS191N
A12U8	1820-2757	9	1	IC FF TTL ALS D-TYPE POS-EDGE-TRIG OCTL	01295	SN74ALS574AN
A12U9	1820-2488	3	2	IC FF TTL ALS D-TYPE POS-EDGE-TRIG	01295	SN74ALS74AN
A12U10	1820-2635	2	2	IC GATE TTL ALS AND QUAD 2-INP	01295	SN74ALS08N
A12U11	1820-2656	7	1	IC GATE TTL ALS NAND QUAD 2-INP	01295	SN74ALS00AN
A12U12	04194-80006	1	1	PAL16R4L	28480	04194-80006
A12U13	1820-2150	6	1	IC MICPROC-ACCESS NMOS	34649	D8279-5
A12U14	1820-3100	8		IC DCDR TTL ALS BIN 3-TO-8-LINE 3-INP	01295	SN74ALS138N
A12U15	1820-2488	3		IC FF TTL ALS D-TYPE POS-EDGE-TRIG	01295	SN74ALS74AN
A12U16	1820-2635	2		IC GATE TTL ALS AND QUAD 2-INP	01295	SN74ALS08N
A12U17	04194-80009	4	1	PAL 10H8	28480	04194-80009
A12U18	1820-3121	3	1	IC TRANSCEIVER TTL ALS BUS OCTL	01295	SN74ALS245AN
A12U19	1820-4350	2	1	IC DRVR TTL ALS LINE OCTL	01295	SN74ALS241AN
A12U20	1820-1416	5	1	IC SCHMITT-TRIG TTL LS INV HEX 1-INP	01295	SN74LS14N
	4040-0749	4	1	EXTR-PC BD BRN POLYC .062-IN-BD-THKNS	28480	4040-0749
	4040-0750	7	1	EXTR-PC BD RED POLYC .062-IN-BD-THKNS	28480	4040-0750

*** Indicates factory selected value.**

Table 2. A13 Replaceable Parts (1 of 2)

Reference Designator	HP Part Number	C D	Qty.	Description	Mfr Code	Mfr Part Number
A13				CONTROL UNIT KEYBOARD		
A13	04195-66513	6	1	CNTRL UNIT KEY'B	28480	04195-66513
A13DS1 - A13DS5	1990-0487	7	8	LED-LAMP LUM-INT=2MCD BVR=5V	28480	HLMP-1401
A13DS6	1990-0670	0	3	LED-LAMP LUM-INT=1MCD IF=20MA-MAX BVR=5V	28480	1990-0670
A13DS7	1990-0485	5	1	LED-LAMP LUM-INT=2MCD IF=30MA-MAX BVR=5V	28480	HLMP-1503
A13DS8	1990-0487	7		LED-LAMP LUM-INT=2MCD BVR=5V	28480	HLMP-1401
A13DS9	1990-0670	0		LED-LAMP LUM-INT=1MCD IF=20MA-MAX BVR=5V	28480	1990-0670
A13DS10	1990-0670	0		LED-LAMP LUM-INT=1MCD IF=20MA-MAX BVR=5V	28480	1990-0670
A13DS11	1990-0487	7		LED-LAMP LUM-INT=2MCD BVR=5V	28480	HLMP-1401
A13DS12	1990-0487	7		LED-LAMP LUM-INT=2MCD BVR=5V	28480	HLMP-1401
A13MP1	5041-4708	6	1	KEY CAP HALF PUTTY (CONFIG)	28480	5041-4708
A13MP2	5041-4640	5	1	KEY CAP HALF PUTTY (FORMAT)	28480	5041-4640
A13MP3	5041-0310	8	6	KEY CAP HALF PUTTY	28480	5041-0310
A13MP4	5041-0310	8		KEY CAP HALF PUTTY	28480	5041-0310
A13MP5	5041-0310	8		KEY CAP HALF PUTTY	28480	5041-0310
A13MP6	5041-0310	8		KEY CAP HALF PUTTY	28480	5041-0310
A13MP7	5041-0376	6	12	KEY CAP HALF SMOKE	28480	5041-0376
A13MP8	5041-4694	9	1	KEY CAP HALF PUTTY (CAL)	28480	5041-4694
A13MP9	5041-4695	0	1	KEY CAP HALF PUTTY (DEFINE MATH)	28480	5041-4695
A13MP10	5041-0310	8		KEY CAP HALF PUTTY	28480	5041-0310
A13MP11	5041-0310	8		KEY CAP HALF PUTTY	28480	5041-0310
A13MP12	5041-4564	2	1	KEY CAP QTR PEARL (LCL)	28480	5041-4564
A13MP13	5041-0376	6		KEY CAP HALF SMOKE	28480	5041-0376
A13MP14	5041-0376	6		KEY CAP HALF SMOKE	28480	5041-0376
A13MP15	5041-4696	1	1	KEY CAP HALF PUTTY (DISPLAY)	28480	5041-4696
A13MP16	5041-4641	6	1	KEY CAP HALF PUTTY (SCALE REF)	28480	5041-4641
A13MP17	5041-4698	3	1	KEY CAP HALF PUTTY (MKR)	28480	5041-4698
A13MP18	5041-0450	7	1	KEY CAP QTR SEA BLUE	28480	5041-0450
A13MP19	5041-0376	6		KEY CAP HALF SMOKE	28480	5041-0376
A13MP20	5041-4697	2	1	KEY CAP HALF PUTTY (VIEW)	28480	5041-4697
A13MP21	5041-4699	4	1	KEY CAP HALF PUTTY (MODE)	28480	5041-4699
A13MP22	5041-0507	5	1	KEY CAP QTR W. GREEN	28480	5041-0507
A13MP23	5041-0376	6		KEY CAP HALF SMOKE	28480	5041-0376
A13MP24	5041-0376	6		KEY CAP HALF SMOKE	28480	5041-0376
A13MP25	5041-0376	6		KEY CAP HALF SMOKE	28480	5041-0376
A13MP26	5041-4700	8	1	KEY CAP HALF PUTTY (MENU)	28480	5041-4700
A13MP27	5041-4702	0	1	KEY CAP HALF SMOKE (CENTER)	28480	5041-4702
A13MP28	5041-4703	1	1	KEY CAP HALF SMOKE (SPAN)	28480	5041-4703
A13MP29	5041-1854	7	1	KEY CAP QTR PEARL (7)	28480	5041-1854
A13MP30	5041-1855	8	1	KEY CAP QTR PEARL (8)	28480	5041-1855
A13MP31	5041-1853	6	2	KEY CAP QTR PEARL (6)	28480	5041-1853
A13MP32	5041-0376	6		KEY CAP HALF SMOKE	28480	5041-0376
A13MP33	5041-0376	6		KEY CAP HALF SMOKE	28480	5041-0376
A13MP34	5041-4701	9	1	KEY CAP HALF PEARL (TRIG/RESET)	28480	5041-4701
A13MP35	5041-4704	2	1	KEY CAP HALF SMOKE (START)	28480	5041-4704
A13MP36	5041-4705	3	1	KEY CAP HALF SMOKE (STOP)	28480	5041-4705
A13MP37	5041-0756	6	2	KEY CAP FULL PEARL (ARROW)	28480	5041-0756
A13MP38	5041-1851	4	1	KEY CAP QTR PEARL (4)	28480	5041-1851
A13MP39	5041-1852	5		KEY CAP QTR PEARL (5)	28480	5041-1852
A13MP40	5041-1853	6		KEY CAP QTR PEARL (6)	28480	5041-1853

*** Indicates factory selected value.**

Table 2. A13 Replaceable Parts (2 of 2)

Reference Designator	HP Part Number	C D	Qty.	Description	Mfr Code	Mfr Part Number
A13MP41	5041-0376	6		KEY CAP HALF SMOKE	28480	5041-0376
A13MP42	5041-0756	6		KEY CAP FULL PEARL (ARROW)	28480	5041-0756
A13MP43	5041-1848	9	1	KEY CAP QTR PEARL (1)	28480	5041-1848
A13MP44	5041-1849	0	1	KEY CAP QTR PEARL (2)	28480	5041-1849
A13MP45	5041-1850	3	1	KEY CAP QTR PEARL (3)	28480	5041-1850
A13MP46	5041-0376	6		KEY CAP HALF SMOKE	28480	5041-0376
A13MP47	5041-0285	6	2	KEY CAP QTR PEARL	28480	5041-0285
A13MP48	5041-0285	6		KEY CAP QTR PEARL	28480	5041-0285
A13MP49	5041-2929	9	1	KEY CAP HALF SMOKE (RES BW)	28480	5041-2929
A13MP50	5041-1856	9	1	KEY CAP QTR PEARL (0)	28480	5041-1856
A13MP51	5041-1847	8	1	KEY CAP QTR PEARL (.)	28480	5041-1847
A13MP52	5041-1770	6	1	KEY CAP QTR PEARL (-)	28480	5041-1770
A13MP53	5041-2099	4	1	KEY CAP HALF W. GREEN (PRESET)	28480	5041-2099
A13MP54	5041-0276	5	6	KEY CAP QTR PEARL	28480	5041-0276
A13MP55	5041-0276	5		KEY CAP QTR PEARL	28480	5041-0276
A13MP56	5041-0276	5		KEY CAP QTR PEARL	28480	5041-0276
A13MP57	5041-0922	8	2	KEY CAP QTR PEARL (ARROW)	28480	5041-0922
A13MP58	5041-0922	8		KEY CAP QTR PEARL (ARROW)	28480	5041-0922
A13MP59	5041-0276	5		KEY CAP QTR PEARL	28480	5041-0276
A13MP60	5041-0276	5		KEY CAP QTR PEARL	28480	5041-0276
A13MP61	5041-0276	5		KEY CAP QTR PEARL	28480	5041-0276
A13MP62	5041-0376	6		KEY CAP HALF SMOKE	28480	5041-0376
A13RPG1	0960-0683	1	1	ROTARY PULSE GENERATOR INPUT POWER: 5VDC	28480	0960-0683
A13S1 - A13S62	5060-9436	7	62	PUSHBUTTON SWITCH P.C. MOUNT	28480	5060-9436
A13W1	04195-61603	5	1	FLAT CABLE ASSEMBLY 40 PIN	28480	04195-61603

*** Indicates factory selected value.**

Table 3. A12 Connector Pin Assignments

A12J1

	A	B	
1			1
2			2
3			3
4			4
5			5
6			6
7	EDA0	EDA1	7
8	EDA2	EDA3	8
9	EDA4	EDA5	9
10	EDA6	EDA7	10
11			11
12	BAA1	BAA2	12
13		BAA3	13
14	EXTLCK		14
15	CRTOUT	EXTUNLCK	15
16	RPG-INT	KEY-INT	16
17	RPG-U/D	CTR-GATE	17
18			18
19	RPG		19
20			20
21	KEY SELECT		21
22			22
23	BEEPER		23
24			24
25	BLDSA		25
26			26
27	BR/WA		27
28			28
29	IORESET A		29
30			30
31	CCLKB		31
32			32

A12J2

	A	B	
1	RLO	RL1	1
2	RL2	RL3	2
3	RL4	RL5	3
4	RL6	RL7	4
5	D-SL0	D-SL1	5
6	D-SL2	D-SL3	6
7	D-SL4	D-SL5	7
8	D-SL6	D-SL7	8
9	SLCK	CNTRL	9
10	LED-A-1	LED-A-2	10
11	LED-K-1	LED-K-2	11
12	LED-K-3	LED-K-4	12
13	LED-K-5	LED-K-6	13
14	LED-K-7	EOSC-LED	14
15	RPG-W/B/B	RPG-W/B/R	15
16	SLCK-LED	KEY1	16
17	KEY2	KEY3	17
18	EULK-LED	+5V	18
19	+5V	GND	19
20	GND	GND	20

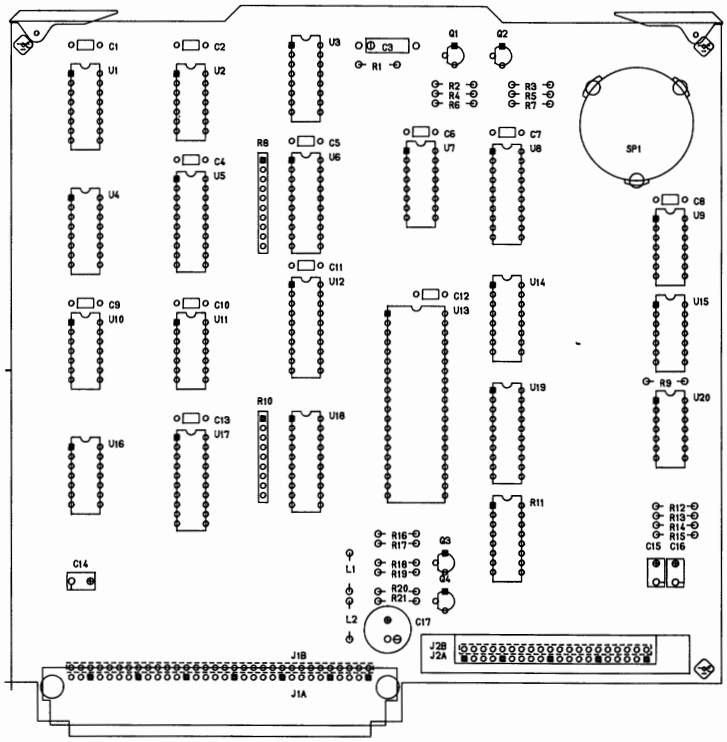

A12 Control Unit Keyboard Control Board Component Locations

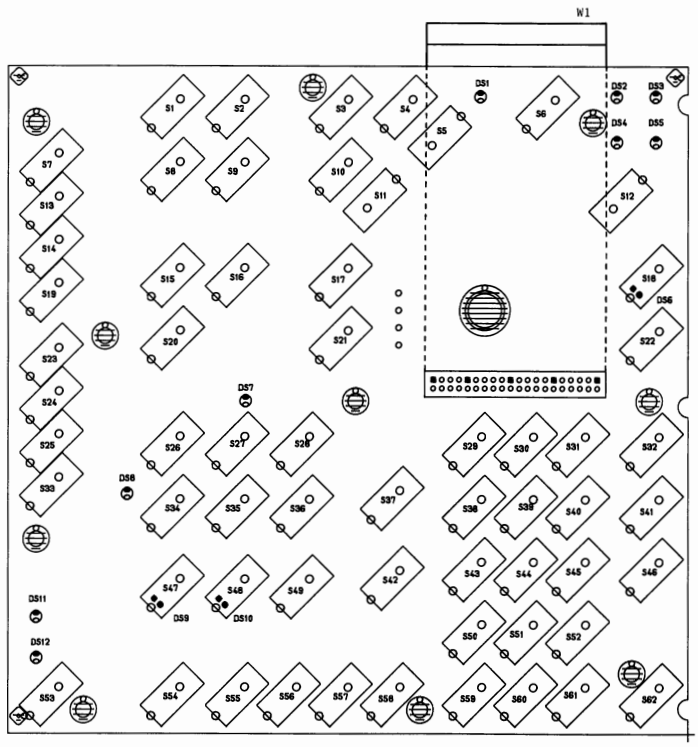

A13 Control Unit Keyboard Component Locations

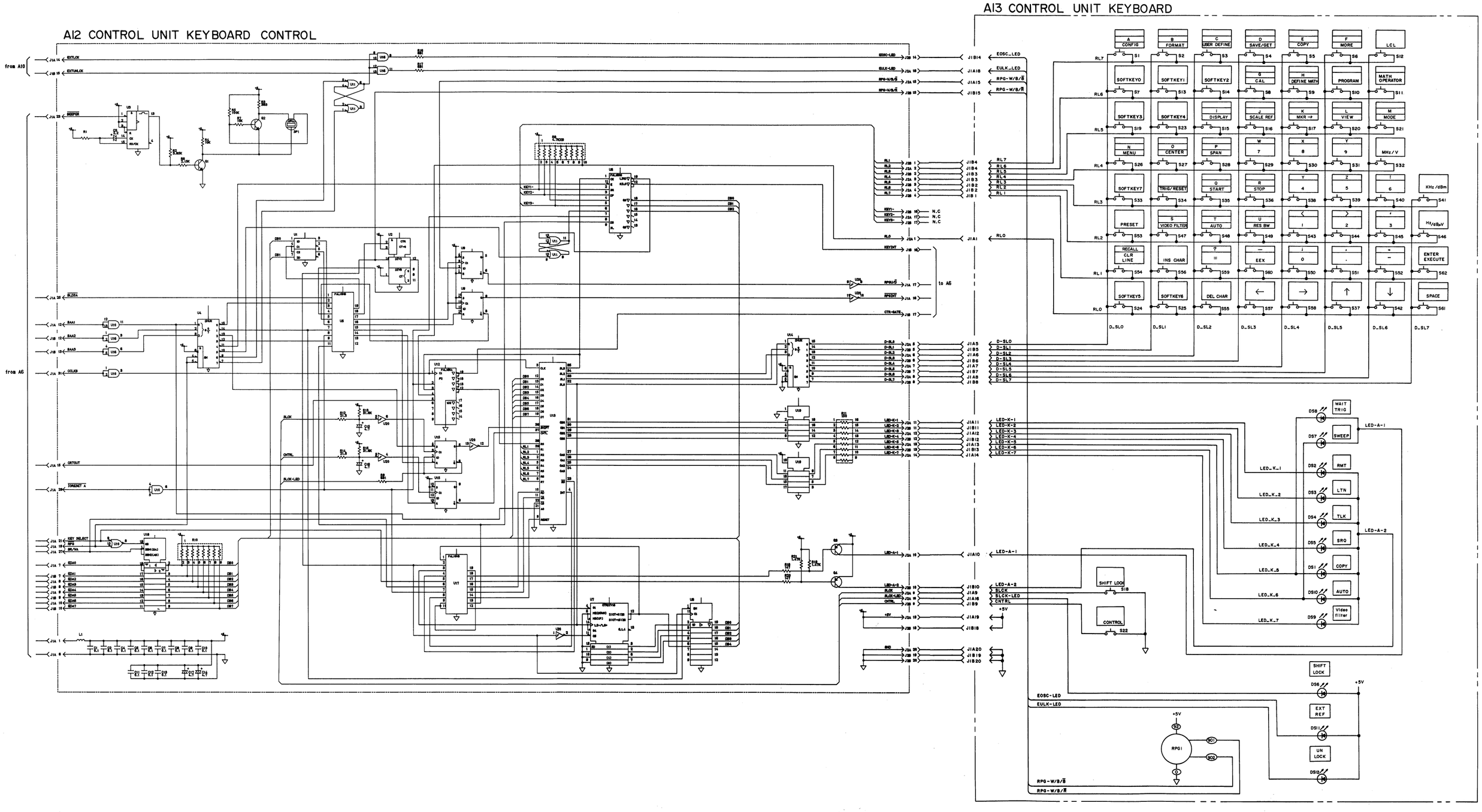
A12 CONTROL UNIT KEYBOARD CONTROL
A13 CONTROL UNIT KEYBOARD
from A10
from A6
to A6
EXTLOK
EXTUNLOK
BEEPER
BLIGHA
BAA1
BAA2
BAA3
COLKB
ORTOUT
TORGENT A
KEY SELECT
RPG
BRLAA
EDA0
EDA1
EDA2
EDA3
EDA4
EDA5
EDA6
EDA7
EOSC-LED
EULK-LED
RPG-W/B/B̄
RPG-W/B/R̄
RL7
RL6
RL5
RL4
RL3
RL2
RL1
RL0
N.C
KEYINT
RPGW/B
RPGINT
CTR-GATE
D-SL0
D-SL1
D-SL2
D-SL3
D-SL4
D-SL5
D-SL6
D-SL7
LED-K-1
LED-K-2
LED-K-3
LED-K-4
LED-K-5
LED-K-6
LED-K-7
LED-A-1
LED-A-2
SLCK
SLCK-LED
CNTRL
+5V
GND
CLK
SHIFT LOCK
CONTROL
S18
S22
A CONFIG
B FORMAT
C USER DEFINE
D SAVE/GET
E COPY
F MORE
LCL
SOFTKEY0
SOFTKEY1
SOFTKEY2
G CAL
H DEFINE MATH
PROGRAM
MATH OPERATOR
SOFTKEY3
SOFTKEY4
I DISPLAY
J SCALE REF
K MKR →
L VIEW
M MODE
N MENU
O CENTER
P SPAN
W 7
X 8
Y 9
MHz/V
SOFTKEY7
TRIG/RESET
Q START
R STOP
4
5
6
KHz/dBm
PRESET
S VIDEO FILTER
T AUTO
U RES BW
1
2
3
Hz/dBμV
RECALL CLR LINE
INS CHAR
EEX
0
.
ENTER EXECUTE
SOFTKEY5
SOFTKEY6
DEL CHAR
SPACE
WAIT TRIG
SWEEP
RMT
LTN
TLK
SRQ
COPY
AUTO
Video filter
SHIFT LOCK
EXT REF
UN LOCK
RPGI

MOTHERBOARD SERVICE SHEET

The A15 Motherboard distributes voltage from the power supply to the boards mounted on it, and provides the interconnect paths for signals between the boards. Table A15-1 shows the connector assignments. The pin assignments are shown in the service sheet for each board.

Table 1. Connector Assignments

J1	to the A12 board
J4	to rear panel HP-IB connector
J5	to rear panel 8-bit INPUT/OUTPUT connector
J6	to rear panel J5 connector
J7	to rear panel PROGRAM START connector (pin 1)
	to rear panel EXT REFERENCE connector (pin 2)
J8	to rear panel J4 connector
J9	to rear panel J2 connector
J10	to rear panel J3 connector
J11	to rear panel EXT REFERENCE connector
J12	to rear panel 10 MHz OUTPUT connector
J13	NC
J14 and J15	to the A6 board
J16 and J17	to the A7 board
J18 and J19	to the A8 board
J20 and J21	to the A9 board
J22 and J23	to the A10 board
J24 to J28	NC
W1	to the A16 board
W2	to the A4 board

Table 2. A15 Replaceable Parts

Reference Designator	HP Part Number	C D	Qty.	Description	Mfr Code	Mfr Part Number
A15				MOTHERBOARD		
A15	04195-66515	8	1	MOTHER BD ASSY	28480	04195-66515
A15J1	1252-1745	8	1	CONN-POST TYPE 2.54-PIN-SPCG 64-CONT	28480	1252-1745
A15J2				NOT ASSIGNED		
A15J3				NOT ASSIGNED		
A15J4	1251-3024	8	2	CONN-POST TYPE .100-PIN-SPCG 26-CONT	28480	1251-3024
A15J5	1251-3024	8		CONN-POST TYPE .100-PIN-SPCG 26-CONT	28480	1251-3024
A15J6	1251-3090	8	1	CONN-POST TYPE .100-PIN-SPCG 50-CONT	28480	1251-3090
A15J7	1251-4938	5	1	CONNECTOR 3-PIN M METRIC POST TYPE	28480	1251-4938
A15J8	1250-0257	1	7	CONNECTOR-RF SMB M PC 50-OHM	28480	1250-0257
A15J9	1250-0257	1		CONNECTOR-RF SMB M PC 50-OHM	28480	1250-0257
A15J10	1250-0257	1		CONNECTOR-RF SMB M PC 50-OHM	28480	1250-0257
A15J11	1250-0257	1		CONNECTOR-RF SMB M PC 50-OHM	28480	1250-0257
A15J12	1250-0257	1		CONNECTOR-RF SMB M PC 50-OHM	28480	1250-0257
A15J13	1250-0257	1		CONNECTOR-RF SMB M PC 50-OHM	28480	1250-0257
A15J14	1252-0721	8	14	CONN-POST TYPE 2.54-PIN-SPCG 96-CONT	28480	1252-0721
A15J15	1252-0721	8		CONN-POST TYPE 2.54-PIN-SPCG 96-CONT	28480	1252-0721
A15J16	1252-0721	8		CONN-POST TYPE 2.54-PIN-SPCG 96-CONT	28480	1252-0721
A15J17	1252-0721	8		CONN-POST TYPE 2.54-PIN-SPCG 96-CONT	28480	1252-0721
A15J18	1252-0721	8		CONN-POST TYPE 2.54-PIN-SPCG 96-CONT	28480	1252-0721
A15J19	1252-0721	8		CONN-POST TYPE 2.54-PIN-SPCG 96-CONT	28480	1252-0721
A15J20	1252-0721	8		CONN-POST TYPE 2.54-PIN-SPCG 96-CONT	28480	1252-0721
A15J21	1252-0721	8		CONN-POST TYPE 2.54-PIN-SPCG 96-CONT	28480	1252-0721
A15J22	1252-0721	8		CONN-POST TYPE 2.54-PIN-SPCG 96-CONT	28480	1252-0721
A15J23	1252-0721	8		CONN-POST TYPE 2.54-PIN-SPCG 96-CONT	28480	1252-0721
A15J24	1252-0721	8		CONN-POST TYPE 2.54-PIN-SPCG 96-CONT	28480	1252-0721
A15J25	1252-0721	8		CONN-POST TYPE 2.54-PIN-SPCG 96-CONT	28480	1252-0721
A15J26	1252-0721	8		CONN-POST TYPE 2.54-PIN-SPCG 96-CONT	28480	1252-0721
A15J27	1252-0721	8		CONN-POST TYPE 2.54-PIN-SPCG 96-CONT	28480	1252-0721
A15J28	1250-0257	1		CONNECTOR-RF SMB M PC 50-OHM	28480	1250-0257
A15W1	04195-65005	9	1	FLAT CABLE ASSEMBLY 34 PIN	28480	04195-65005
A15W2	04195-65004	8	1	FLAT CABLE ASSEMBLY 26 PIN	28480	04195-65004

*** Indicates factory selected value.**

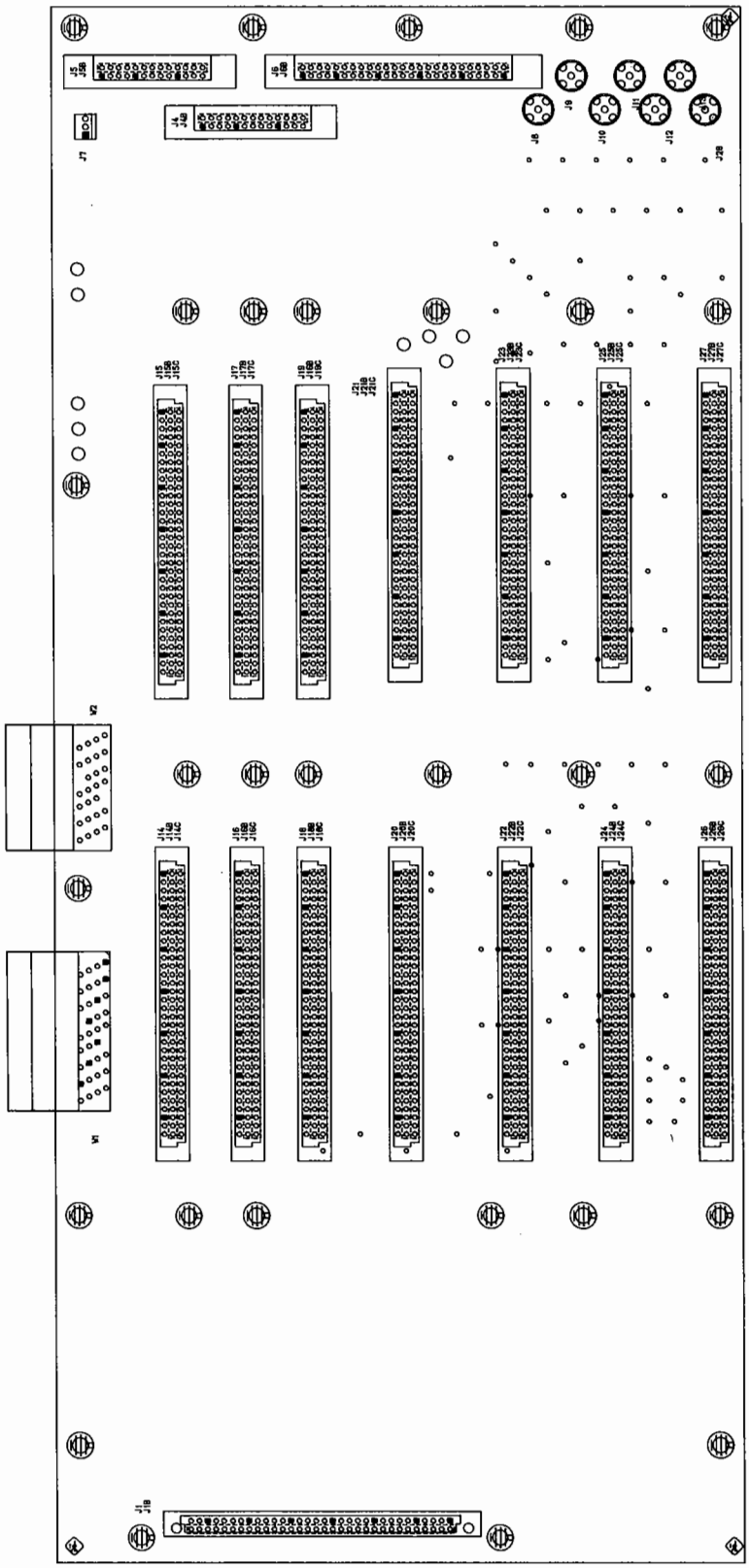

A15 Motherboard Component Locations

FLEXIBLE DISC DRIVE CONTROLLER SERVICE SHEET

The A16 Flexible Disc Drive Controller board controls the flexible disc drive (FDD).

CIRCUIT DESCRIPTION:

The A16 board consists of a FDC (Flexible Disc Controller), VFO (Variable Frequency Oscillator), and registers.

Flexible Disc Controller: (A16U5)

The FDC controls the FDD's read/write operations. When writing data to the flexible disc, the FDC converts the 8-bit parallel data from the A6 board to a serial data format and transmits it to the FDD. The FDC performs a serial to parallel data conversion as it reads the data from the FDD. It converts the serial data from the VFO to the 8-bit parallel data format, and places the converted data on to the data bus.

Variable Frequency Oscillator: (A16U6)

The VFO separates the READ DATA signal from the FDD into the clock and data signals, and then transfers the data to the FDC. The VFO uses an 8 MHz clock (A16Y1), and supplies the CLK and RCLK signals to the FDC.

TROUBLESHOOTING GUIDE:

Service Function No. 140:

Service Function No.140 is the Disc Drive Fault Isolation test function. This test confirms if the read/write operations are being performed normally. How to use service function No. 140 is described in Appendix B.

Table 1. A16 Replaceable Parts

Reference Designator	HP Part Number	C D	Qty.	Description	Mfr Code	Mfr Part Number
A16				FLEXIBLE DISC DRIVE CONTROLLER		
A16	04195-66516	9	1	FDD CONTROL BD'Y	28480	04195-66516
A16C1	0180-3217	9	2	CAPACITOR-FXD 470UF+-20% 6.3VDC AL	28480	0180-3217
A16C2	0180-3217	9		CAPACITOR-FXD 470UF+-20% 6.3VDC AL	28480	0180-3217
A16C3	0160-6561	0	7	CAPACITOR-FXD .1UF +-20% 50VDC CER	16299	CAC02Z5U104M050A
A16C4	0160-6561	0		CAPACITOR-FXD .1UF +-20% 50VDC CER	16299	CAC02Z5U104M050A
A16C5	0160-6561	0		CAPACITOR-FXD .1UF +-20% 50VDC CER	16299	CAC02Z5U104M050A
A16C6	0160-6561	0		CAPACITOR-FXD .1UF +-20% 50VDC CER	16299	CAC02Z5U104M050A
A16C7	0160-4830	2	1	CAPACITOR-FXD 2200PF +-10% 100VDC CER	28480	0160-4830
A16C8	0160-4832	4	1	CAPACITOR-FXD .01UF +-10% 100VDC CER	28480	0160-4832
A16C9	0160-6561	0		CAPACITOR-FXD .1UF +-20% 50VDC CER	16299	CAC02Z5U104M050A
A16C10	0160-4801	7	1	CAPACITOR-FXD 100PF +-5% 100VDC CER	28480	0160-4801
A16C11	0160-6561	0		CAPACITOR-FXD .1UF +-20% 50VDC CER	16299	CAC02Z5U104M050A
A16C12	0160-6561	0		CAPACITOR-FXD .1UF +-20% 50VDC CER	16299	CAC02Z5U104M050A
A16C13	0160-4812	0	1	CAPACITOR-FXD 220PF +-5% 100VDC CER	28480	0160-4812
A16C14	0160-4810	8	1	CAPACITOR-FXD 330PF +-5% 100VDC CER	28480	0160-4810
A16C15	0180-3469	3	2	CAPACITOR-FXD 100UF+-20% 25VDC AL	28480	0180-3469
A16C16	0180-3469	3		CAPACITOR-FXD 100UF+-20% 25VDC AL	28480	0180-3469
A16J1	1251-8601	7	1	CONN-POST TYPE .100-PIN-SPCG 34-CONT	28480	1251-8601
A16R1	0757-0441	8	1	RESISTOR 8.25K 1% .125W F TC=0+-100	24546	CT4-1/8-T0-8251-F
A16R2	0698-3160	8	1	RESISTOR 31.6K 1% .125W F TC=0+-100	24546	CT4-1/8-T0-3162-F
A16R3	0757-0280	3	2	RESISTOR 1K 1% .125W F TC=0+-100	24546	CT4-1/8-T0-1001-F
A16R4	0757-0280	3		RESISTOR 1K 1% .125W F TC=0+-100	24546	CT4-1/8-T0-1001-F
A16R5	0698-0084	9	1	RESISTOR 2.15K 1% .125W F TC=0+-100	24546	CT4-1/8-T0-2151-F
A16R6	1810-0280	8	1	NETWORK-RES 10-SIP 10.0K OHM X 9	91637	CSC10A01-103G
A16R7	0698-0083	8	1	RESISTOR 1.96K 1% .125W F TC=0+-100	24546	CT4-1/8-T0-1961-F
A16R8	0757-0439	4	1	RESISTOR 6.81K 1% .125W F TC=0+-100	24546	CT4-1/8-T0-6811-F
A16U1	1820-3121	3	1	IC TRANSCEIVER TTL ALS BUS OCTL	01295	SN74ALS245AN
A16U2	1820-3707	1	1	IC DRVR TTL ALS LINE OCTL	01295	SN74ALS541N
A16U3	1820-3318	0	1	IC FF TTL ALS D-TYPE POS-EDGE-TRIG COM	01295	SN74ALS273N
A16U4	1820-2634	1	3	IC INV TTL ALS HEX	01295	SN74ALS04BN
A16U5	1820-5635	8	1	IC MPU MB89311		
A16U6	1826-1408	7	1	IC MISC 24-DIP-P PKG	S0167	MB4107
A16U7	1820-2774	0	1	IC GATE TTL ALS NAND DUAL 4-INP	01295	SN74ALS20AN
A16U8	1820-3100	8	1	IC DCDR TTL ALS BIN 3-TO-8-LINE 3-INP	01295	SN74ALS138N
A16U9	1820-2634	1		IC INV TTL ALS HEX	01295	SN74ALS04BN
A16U10	1820-1416	5	1	IC SCHMITT-TRIG TTL LS INV HEX 1-INP	01295	SN74LS14N
A16U11	1820-2634	1		IC INV TTL ALS HEX	01295	SN74ALS04BN
A16U12	1826-0147	9	1	IC 7812 V RGLTR TO-220	04713	MC7812CP
A16W1	04195-65006	0	1	FLAT CABLE ASSEMBLY 34PIN	28480	04195-65006
A16Y1	0410-1377	7	1	XTAL 8MHZ	28480	0410-1377
	9170-0847	3	4	CORE-SHIELDING BEAD	02114	56-590-65

*** Indicates factory selected value.**

Table 2. A16 Connector Pin Assignments

A16J1

+16 V	1	2	+16 V
+16 V	3	4	GND
$\overline{\text{BASA}}$	5	6	$\overline{\text{ENDA}}$
BAA23	7	8	BAA22
BAA10	9	10	BAA9
BAA8	11	12	GND
$\overline{\text{IORESETA}}$	13	14	GND
$\overline{\text{BAA2}}$	15	16	$\overline{\text{BAA1}}$
GND	17	18	$\overline{\text{BLDSA}}$
GND	19	20	BR/WA
GND	21	22	EDA7
EDA6	23	24	EDA5
EDA4	25	26	EDA3
EDA2	27	28	EDA1
EDA0	29	30	GND
+5 V	31	32	+5 V
+5 V	33	▶ 34	+5 V

A16J2

CHANGE RESET	1	2	DISK CHARGE
+5 V	3	4	IN USE
+5 V	5	6	DRIVE SELECT 3
+5 V	7	8	INDEX
+5 V	9	10	DRIVE SELECT 0
+5 V	11	12	DRIVE SELECT 1
GND	13	14	DRIVE SELECT 2
GND	15	16	MOTOR ON
GND	17	18	DIRECTION
GND	19	20	STEP
GND	21	22	WRITE DATA
GND	23	24	WRITE GATE
GND	25	26	TRACK 00
GND	27	28	WRITE PROTECT
+12 V	29	30	READ DATA
+12 V	31	32	HEAD SELECT
+12 V	33	▶ 34	READY

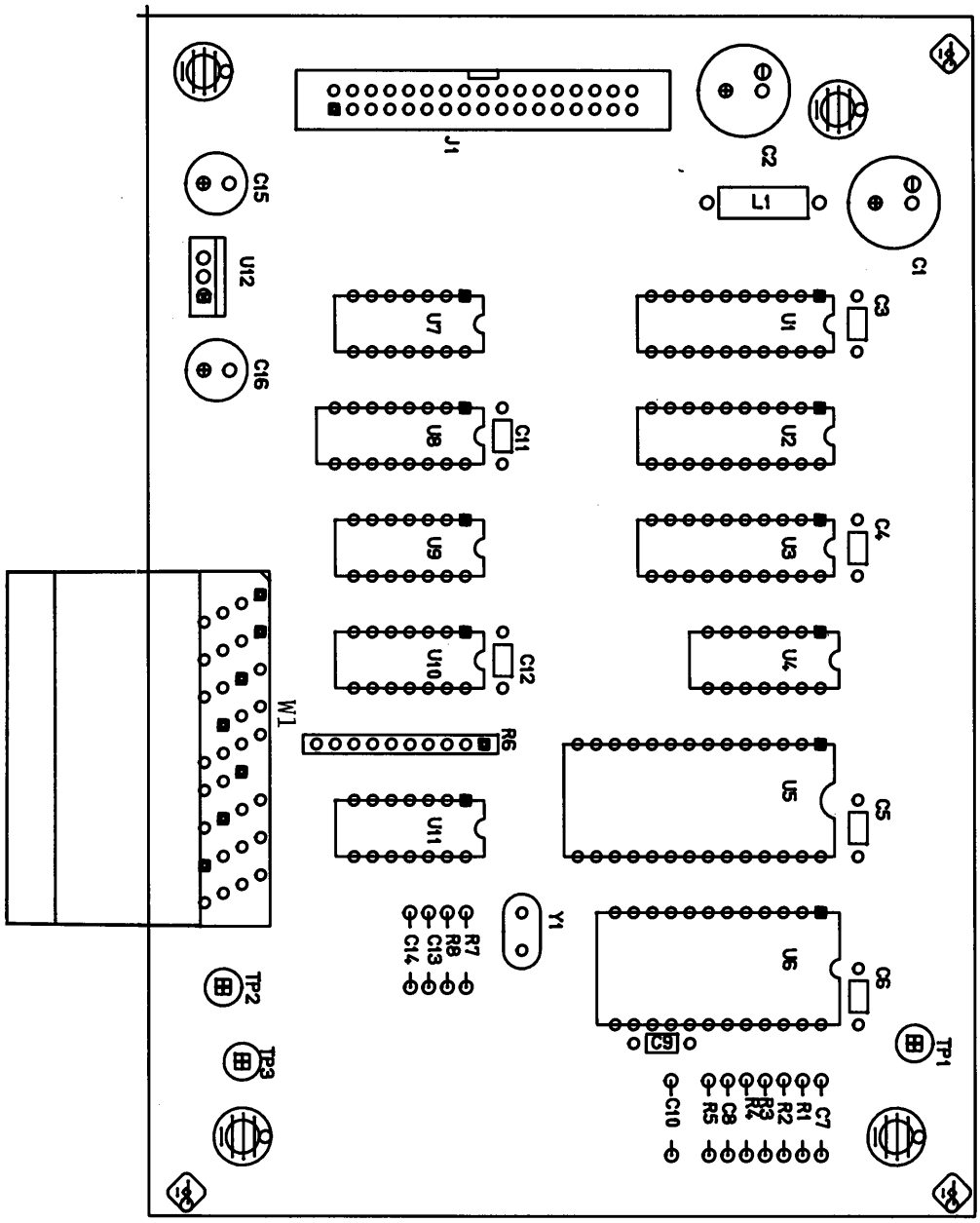

A16 Flexible Disc Drive Component Locations

A16 FLEXIBLE DISC DRIVE CONTROLLER

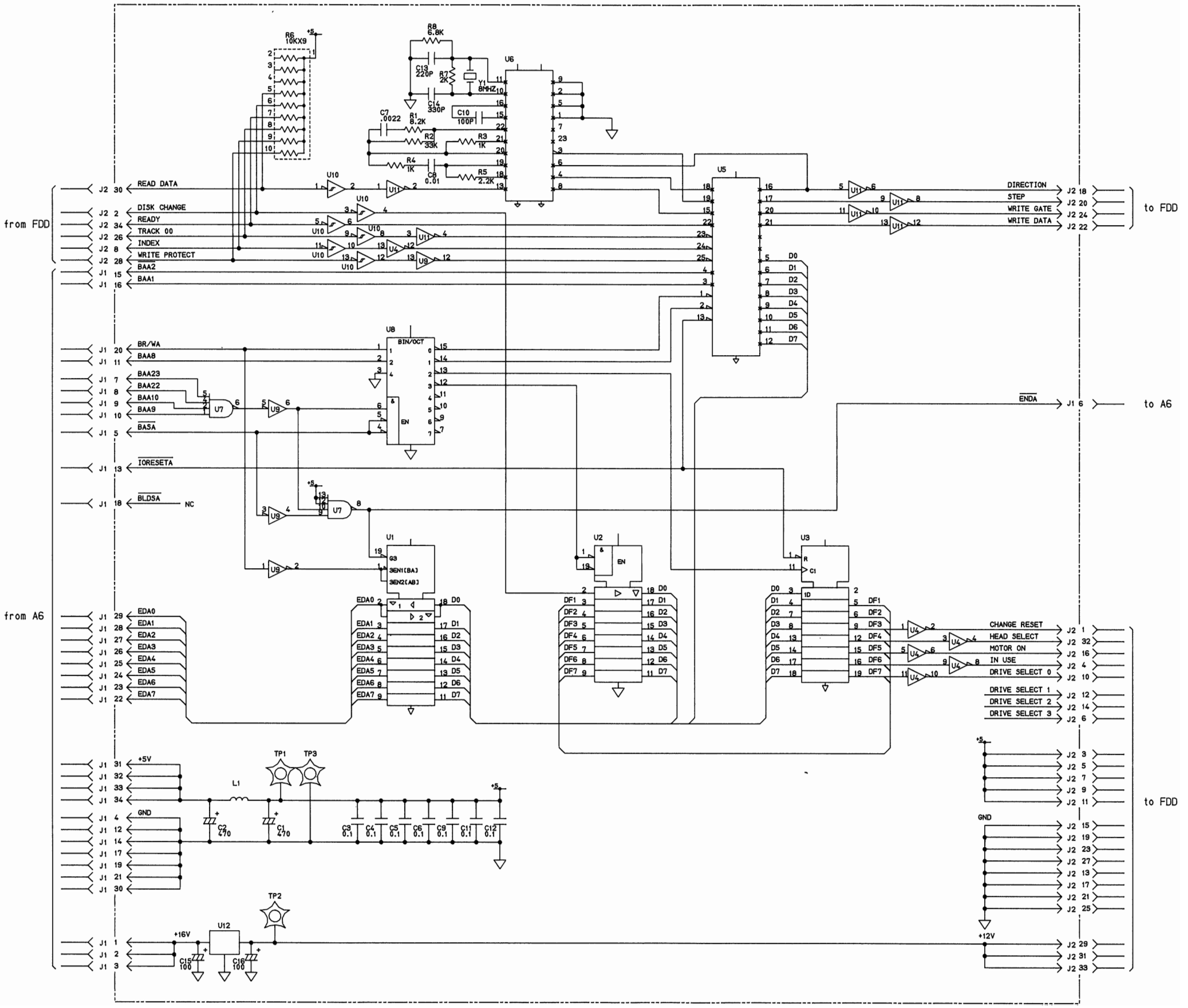

MEASUREMENT UNIT BOTTOM-CHASSIS SERVICE SHEET

RECEIVER 3RD IF CONVERTER SERVICE SHEET

The A20 receiver third IF converter converts the 86.6 MHz signal from the A21 second IF converter board or the A22 first IF converter board to a 6.6 MHz signal, and feeds it to the A9 phase detector/A-D converter board. The amplitude of the output signal is switched by selecting the IF RANGE.

CIRCUIT DESCRIPTION:

The A20 receiver third IF converter board consists of an input switch, 86.6 MHz bandpass filter, mixer, 6.9 MHz bandpass filter, 6.3 MHz bandpass filter, amplifiers, etc.

The input switch selects the RF input signal to be fed to the mixer. The input signal is the 86.6 MHz signal from A21 or A22 boards, and is selected by the IN-IF3-INPUT signal. The select signal relates to the measurement frequency, as shown in Table 1.

Table 1. Input Switch Operation

Measurement Frequency (Fm)	IN-IF3-INPUT	Switching Diode	Input Signal
Fm < 150 MHz	High	CR6, CR8, CR3 on	A21 Output Signal
Fm ≥ 150 MHz	Low	CR4, CR5, CR7 on	A22 Output Signal

High: approx. +10 V
Low: approx. -10 V

The signal selected by the input switch is filtered by a 86.6 MHz bandpass filter, and is fed to mixer E1 where it is mixed with the 80 MHz LO signal. The 6.6 MHz mixer IF signal is filtered by a 6.9 MHz bandpass filter, amplified, filtered by a 6.3 MHz bandpass filter, buffered, and fed to the A9 board.

The gain of the -16 dB/4 dB and the 12 dB/22 dB amplifiers is controlled by the IF-GAIN-20 and IF-GAIN-10 signals, respectively. The total gain of the two amplifiers, which is variable in 10 dB steps, depends on the IF range setting selected using softkeys.

In the Spectrum configuration, the two control signals depend on the IF range setting, the gain changes as shown in Table 2. For example, when the IF range is set to the High Sensitivity mode, the two control signals are high, so the -16 dB/4 dB amplifier gain is approximately 4 dB, and the 12 dB/22 dB amplifier gain is approximately 22 dB. The total gain of the two amplifiers is approximately 26 dB, and the total gain of the A20 board (from J4 or J5 connector to J1 connector) is approximately 42 dB.

Table 2. Amplifier Gain Control (Spectrum Configuration)

IF RANGE	Control Signal		Gain
	IF-GAIN-20	IN-GAIN-10	(J4 or J5 to J1)
NORMAL	Low	High	approx. 22 dB
Lo DISTN	High	Low	approx. 32 dB
Hi SENSE	High	High	approx. 42 dB

High: approx. +10 V
Low: approx. -10 V

In all measurement configurations except Spectrum, the IF-GAIN-20 signal is automatically controlled, depending on the level detected by the A-D converter on the A9 board, and the IF-GAIN-10 signal depends on the IF range setting. The IF-GAIN-10 signal is high when the IF range is set to the High Sensitivity mode.

Table 3. A20 Replaceable Parts (1 of 4)

Reference Designator	HP Part Number	C D	Qty.	Description	Mfr Code	Mfr Part Number
A20				RECEIVER 3RD IF CONVERTER		
A20	04195-66520	5	1	RCVR 3RD IF BD'Y	28480	04195-66520
A20C1	0160-2437	1	5	CAPACITOR-FDTHRU 5000PF +80 -20% 200V	28480	0160-2437
	2580-0006	8	5	NUT-HEX	28480	2580-0006
	9170-1397	0	5	BEAD INDUCTOR	28480	9170-1397
A20C2	0160-2437	1		CAPACITOR-FDTHRU 5000PF +80 -20% 200V	28480	0160-2437
	2580-0006	8		NUT-HEX	28480	2580-0006
	9170-1397	0		BEAD INDUCTOR	28480	9170-1397
A20C3	0160-4822	2	9	CAPACITOR-FXD 1000PF +-5% 100VDC CER	28480	0160-4822
A20C4	0160-4830	2	2	CAPACITOR-FXD 2200PF +-10% 100VDC CER	28480	0160-4830
A20C5	0160-6561	0	13	CAPACITOR-FXD .1UF +-20% 50VDC CER	16299	CAC02Z5U104M050A
A20C6				NOT ASSIGNED		
A20C7	0160-6561	0		CAPACITOR-FXD .1UF +-20% 50VDC CER	16299	CAC02Z5U104M050A
A20C8	0160-6561	0		CAPACITOR-FXD .1UF +-20% 50VDC CER	16299	CAC02Z5U104M050A
A20C9	0160-2437	1		CAPACITOR-FDTHRU 5000PF +80 -20% 200V	28480	0160-2437
	2580-0006	8		NUT-HEX	28480	2580-0006
	9170-1397	0		BEAD INDUCTOR	28480	9170-1397
A20C10	0160-6561	0		CAPACITOR-FXD .1UF +-20% 50VDC CER	16299	CAC02Z5U104M050A
A20C11	0180-3363	6	2	CAPACITOR-FXD 22UF+-20% 25VDC AL	28480	0180-3363
A20C12	0180-3363	6		CAPACITOR-FXD 22UF+-20% 25VDC AL	28480	0180-3363
A20C13	0160-4808	4	1	CAPACITOR-FXD 470PF +-5% 100VDC CER	28480	0160-4808
A20C14	0160-6561	0		CAPACITOR-FXD .1UF +-20% 50VDC CER	16299	CAC02Z5U104M050A
A20C15	0160-6561	0		CAPACITOR-FXD .1UF +-20% 50VDC CER	16299	CAC02Z5U104M050A
A20C16	0121-0061	1	1	CAPACITOR-V TRMR-CER 5.5-18PF 350V	73899	DV11PS18A
A20C17	0160-6561	0		CAPACITOR-FXD .1UF +-20% 50VDC CER	16299	CAC02Z5U104M050A
A20C18	0121-0060	0	2	CAPACITOR-V TRMR-CER 2-8PF 350V PC-MTG	52763	304322 2/8PF NPO
A20C19	0160-4799	2	1	CAPACITOR-FXD 2.2PF +-.25PF 100VDC CER	28480	0160-4799
A20C20	0160-6561	0		CAPACITOR-FXD .1UF +-20% 50VDC CER	16299	CAC02Z5U104M050A
A20C21	0160-6561	0		CAPACITOR-FXD .1UF +-20% 50VDC CER	16299	CAC02Z5U104M050A
A20C22	0160-6561	0		CAPACITOR-FXD .1UF +-20% 50VDC CER	16299	CAC02Z5U104M050A
A20C23	0160-4822	2		CAPACITOR-FXD 1000PF +-5% 100VDC CER	28480	0160-4822
A20C24	0160-6561	0		CAPACITOR-FXD .1UF +-20% 50VDC CER	16299	CAC02Z5U104M050A
A20C25	0160-4807	3	1	CAPACITOR-FXD 33PF +-5% 100VDC CER 0+-30	28480	0160-4807
A20C26	0121-0060	0		CAPACITOR-V TRMR-CER 2-8PF 350V PC-MTG	52763	304322 2/8PF NPO
A20C27	0160-4805	1	5	CAPACITOR-FXD 47PF +-5% 100VDC CER 0+-30	28480	0160-4805
A20C28	0160-6561	0		CAPACITOR-FXD .1UF +-20% 50VDC CER	16299	CAC02Z5U104M050A
A20C29	0160-4801	7	1	CAPACITOR-FXD 100PF +-5% 100VDC CER	28480	0160-4801
A20C30	0160-4800	6	1	CAPACITOR-FXD 120PF +-5% 100VDC CER	28480	0160-4800
A20C31	0160-4791	4	1	CAPACITOR-FXD 10PF +-5% 100VDC CER 0+-30	28480	0160-4791
A20C32	0160-4822	2		CAPACITOR-FXD 1000PF +-5% 100VDC CER	28480	0160-4822
A20C33	0160-4805	1		CAPACITOR-FXD 47PF +-5% 100VDC CER 0+-30	28480	0160-4805
A20C34	0160-4805	1		CAPACITOR-FXD 47PF +-5% 100VDC CER 0+-30	28480	0160-4805
A20C35	0160-4788	9	2	CAPACITOR-FXD 18PF +-5% 100VDC CER 0+-30	28480	0160-4788
A20C36	0160-4789	0	1	CAPACITOR-FXD 15PF +-5% 100VDC CER 0+-30	28480	0160-4789
A20C37	0160-2235	7	2	CAPACITOR-FXD .75PF +-.25PF 500VDC CER	28480	0160-2235
A20C38	0160-2235	7		CAPACITOR-FXD .75PF +-.25PF 500VDC CER	28480	0160-2235
A20C39	0160-4788	9		CAPACITOR-FXD 18PF +-5% 100VDC CER 0+-30	28480	0160-4788
A20C40	0160-4805	1		CAPACITOR-FXD 47PF +-5% 100VDC CER 0+-30	28480	0160-4805
A20C41	0160-4805	1		CAPACITOR-FXD 47PF +-5% 100VDC CER 0+-30	28480	0160-4805
A20C42	0160-4822	2		CAPACITOR-FXD 1000PF +-5% 100VDC CER	28480	0160-4822
A20C43	0160-4822	2		CAPACITOR-FXD 1000PF +-5% 100VDC CER	28480	0160-4822
A20C44	0160-2437	1		CAPACITOR-FDTHRU 5000PF +80 -20% 200V	28480	0160-2437
	2580-0006	8		NUT-HEX	28480	2580-0006
	9170-1397	0		BEAD INDUCTOR	28480	9170-1397
A20C45	0160-4822	2		CAPACITOR-FXD 1000PF +-5% 100VDC CER	28480	0160-4822

*** Indicates factory selected value.**

Table 3. A20 Replaceable Parts (2 of 4)

Reference Designator	HP Part Number	C D	Qty.	Description	Mfr Code	Mfr Part Number
A20C46	0160-4822	2		CAPACITOR-FXD 1000PF +-5% 100VDC CER	28480	0160-4822
A20C47	0160-4830	2		CAPACITOR-FXD 2200PF +-10% 100VDC CER	28480	0160-4830
A20C48	0160-2437	1		CAPACITOR-FDTHRU 5000PF +80 -20% 200V	28480	0160-2437
	2580-0006	8		NUT-HEX	28480	2580-0006
	9170-1397	0		BEAD INDUCTOR	28480	9170-1397
A20C49	0160-4822	2		CAPACITOR-FXD 1000PF +-5% 100VDC CER	28480	0160-4822
A20C50	0160-4822	2		CAPACITOR-FXD 1000PF +-5% 100VDC CER	28480	0160-4822
A20C51-A20C59				NOT ASSIGNED		
A20C60	0160-6561	0		CAPACITOR-FXD .1UF +-20% 50VDC CER	16299	CAC02Z5U104M050A
A20CR1	1901-0948	8	8	DIODE-SWITCHING 30V 100MA	28480	1901-0948
A20CR2	1901-0948	8		DIODE-SWITCHING 30V 100MA	28480	1901-0948
A20CR3	1901-0948	8		DIODE-SWITCHING 30V 100MA	28480	1901-0948
A20CR4	1901-0948	8		DIODE-SWITCHING 30V 100MA	28480	1901-0948
A20CR5	1901-0948	8		DIODE-SWITCHING 30V 100MA	28480	1901-0948
A20CR6	1901-0948	8		DIODE-SWITCHING 30V 100MA	28480	1901-0948
A20CR7	1901-0948	8		DIODE-SWITCHING 30V 100MA	28480	1901-0948
A20CR8	1901-0948	8		DIODE-SWITCHING 30V 100MA	28480	1901-0948
A20E1	1906-0235	6	1	DIODE	28480	1906-0235
A20J1	1250-0257	1	3	CONNECTOR-RF SMB M PC 50-OHM	28480	1250-0257
A20J2				NOT ASSIGNED		
A20J3	1250-0835	1	1	CONNECTOR-RF SMC M PC 50-OHM	28480	1250-0835
A20J4	1250-0257	1		CONNECTOR-RF SMB M PC 50-OHM	28480	1250-0257
A20J5	1250-0257	1		CONNECTOR-RF SMB M PC 50-OHM	28480	1250-0257
A20L1	9140-0158	6	4	INDUCTOR RF-CH-MLD 1UH 10%	28480	9140-0158
A20L2	9140-0158	6		INDUCTOR RF-CH-MLD 1UH 10%	28480	9140-0158
A20L3	9100-3562	8	1	INDUCTOR RF-CH-MLD 4.7UH 5%	28480	9100-3562
A20L4	9140-0210	1	4	INDUCTOR RF-CH-MLD 100UH 5%	28480	9140-0210
A20L5				NOT ASSIGNED		
A20L6	9140-0210	1		INDUCTOR RF-CH-MLD 100UH 5%	28480	9140-0210
A20L7	9100-0539	3	4	INDUCTOR (MISC ITEM)	28480	9100-0539
A20L8	9100-2259	8	3	INDUCTOR RF-CH-MLD 1.5UH 10%	28480	9100-2259
A20L9	9140-0210	1		INDUCTOR RF-CH-MLD 100UH 5%	28480	9140-0210
A20L10	9100-3313	7	1	INDUCTOR RF-CH-MLD 22UH 5%	28480	9100-3313
A20L11	9100-0539	3		INDUCTOR (MISC ITEM)	28480	9100-0539
A20L12	9140-0210	1		INDUCTOR RF-CH-MLD 100UH 5%	28480	9140-0210
A20L13	9100-2259	8		INDUCTOR RF-CH-MLD 1.5UH 10%	28480	9100-2259
A20L14	9140-0129	1	1	INDUCTOR RF-CH-MLD 220UH 5%	28480	9140-0129
A20L15	9100-0539	3		INDUCTOR (MISC ITEM)	28480	9100-0539
A20L16	9100-2259	8		INDUCTOR RF-CH-MLD 1.5UH 10%	28480	9100-2259
A20L17	9140-0098	3	1	INDUCTOR RF-CH-MLD 2.2UH 10%	28480	9140-0098
A20L18	9100-0539	3		INDUCTOR (MISC ITEM)	28480	9100-0539
A20L19	9140-0158	6		INDUCTOR RF-CH-MLD 1UH 10%	28480	9140-0158
A20L20	9140-1304	6	3	COIL-VAR 159NH-264NH Q=65 PC-MTG	S4218	E502-AN-8000019
A20L21	9140-1304	6		COIL-VAR 159NH-264NH Q=65 PC-MTG	S4218	E502-AN-8000019
A20L22	9140-1304	6		COIL-VAR 159NH-264NH Q=65 PC-MTG	S4218	E502-AN-8000019
A20L23	9140-0158	6		INDUCTOR RF-CH-MLD 1UH 10%	28480	9140-0158
A20MP1	04195-00705		1	PLATE SHIELD		
A20Q1	1854-1074	2	3	TRANSISTOR NPN SI PD=200MW FT=.03HZ	28480	1854-1074
A20Q2	1854-0247	9	1	TRANSISTOR NPN SI TO-39 PD=1W FT=800MHZ	28480	1854-0247
A20Q3	1854-1074	2		TRANSISTOR NPN SI PD=200MW FT=.03HZ	28480	1854-1074

*** Indicates factory selected value.**

Table 3. A20 Replaceable Parts (3 of 4)

Reference Designator	HP Part Number	C D	Qty.	Description	Mfr Code	Mfr Part Number
A20Q4	1855-0609	9	2	TRANSISTOR J-FET N-CHAN TO-92 SI	28480	1855-0609
A20Q5	1855-0609	9		TRANSISTOR J-FET N-CHAN TO-92 SI	28480	1855-0609
A20Q6	1854-1073	1	2	TRANSISTOR NPN SI PD=600MW FT=6.5GHZ	28480	1854-1073
	9170-0029	3	2	CORE-SHIELDING BEAD	28480	9170-0029
	9170-0029	3		CORE-SHIELDING BEAD	28480	9170-0029
A20Q7	1854-1074	2		TRANSISTOR NPN SI PD=200MW FT=.03HZ	28480	1854-1074
A20Q8	1854-0810	2	1	TRANSISTOR NPN SI PD=625MW FT=200MHZ	28480	1854-0810
A20Q9	1854-1073	1		TRANSISTOR NPN SI PD=600MW FT=6.5GHZ	28480	1854-1073
	9170-0029	3		CORE-SHIELDING BEAD	28480	9170-0029
A20R1	0698-3153	9	7	RESISTOR 3.83K 1% .125W F TC=0+-100	24546	CT4-1/8-T0-3831-F
A20R2	0757-0401	0	6	RESISTOR 100 1% .125W F TC=0+-100	24546	CT4-1/8-T0-101-F
A20R3	0757-0401	0		RESISTOR 100 1% .125W F TC=0+-100	24546	CT4-1/8-T0-101-F
A20R4				NOT ASSIGNED		
A20R5	0757-0442	9	2	RESISTOR 10K 1% .125W F TC=0+-100	24546	CT4-1/8-T0-1002-F
A20R6	0698-3430	5	7	RESISTOR 21.5 1% .125W F TC=0+-100	03888	PME55-1/8-T0-21R5-F
A20R7	0698-3441	8	2	RESISTOR 215 1% .125W F TC=0+-100	24546	CT4-1/8-T0-215R-F
A20R8	0698-3441	8		RESISTOR 215 1% .125W F TC=0+-100	24546	CT4-1/8-T0-215R-F
A20R9	0698-3153	9		RESISTOR 3.83K 1% .125W F TC=0+-100	24546	CT4-1/8-T0-3831-F
A20R10	0698-3430	5		RESISTOR 21.5 1% .125W F TC=0+-100	03888	PME55-1/8-T0-21R5-F
A20R11	0757-0280	3	2	RESISTOR 1K 1% .125W F TC=0+-100	24546	CT4-1/8-T0-1001-F
A20R12	2100-3212	8	1	RESISTOR-TRMR 200 10% C TOP-ADJ 1-TRN	28480	2100-3212
A20R13				NOT ASSIGNED		
A20R14	0757-0401	0		RESISTOR 100 1% .125W F TC=0+-100	24546	CT4-1/8-T0-101-F
A20R15	0698-3430	5		RESISTOR 21.5 1% .125W F TC=0+-100	03888	PME55-1/8-T0-21R5-F
A20R16	0757-0461	2	1	RESISTOR 68.1K 1% .125W F TC=0+-100	24546	CT4-1/8-T0-6812-F
A20R17	0683-0475	1	1	RESISTOR 4.7 5% .25W CF TC=0-400	01121	CB47G5
A20R18	0757-0421	4	1	RESISTOR 825 1% .125W F TC=0+-100	24546	CT4-1/8-T0-825R-F
A20R19	2100-3383	4	1	RESISTOR-TRMR 50 10% C TOP-ADJ 1-TRN	28480	2100-3383
A20R20	0757-0401	0		RESISTOR 100 1% .125W F TC=0+-100	24546	CT4-1/8-T0-101-F
A20R21	0757-1094	9	1	RESISTOR 1.47K 1% .125W F TC=0+-100	24546	CT4-1/8-T0-1471-F
A20R22	0698-3430	5		RESISTOR 21.5 1% .125W F TC=0+-100	03888	PME55-1/8-T0-21R5-F
A20R23	0698-3430	5		RESISTOR 21.5 1% .125W F TC=0+-100	03888	PME55-1/8-T0-21R5-F
A20R24	0698-3161	9	1	RESISTOR 38.3K 1% .125W F TC=0+-100	24546	CT4-1/8-T0-3832-F
A20R25	0757-0463	4	1	RESISTOR 82.5K 1% .125W F TC=0+-100	24546	CT4-1/8-T0-8252-F
A20R26				NOT ASSIGNED		
A20R27	0757-0420	3	1	RESISTOR 750 1% .125W F TC=0+-100	24546	CT4-1/8-T0-751-F
A20R28	0757-0280	3		RESISTOR 1K 1% .125W F TC=0+-100	24546	CT4-1/8-T0-1001-F
A20R29	0698-3430	5		RESISTOR 21.5 1% .125W F TC=0+-100	03888	PME55-1/8-T0-21R5-F
A20R30	0757-0418	9	1	RESISTOR 619 1% .125W F TC=0+-100	24546	CT4-1/8-T0-619R-F
A20R31	2100-0568	1	1	RESISTOR-TRMR 100 10% C TOP-ADJ 1-TRN	28480	2100-0568
A20R32	0698-3430	5		RESISTOR 21.5 1% .125W F TC=0+-100	03888	PME55-1/8-T0-21R5-F
A20R33				NOT ASSIGNED		
A20R34	0698-3446	3	2	RESISTOR 383 1% .125W F TC=0+-100	24546	CT4-1/8-T0-383R-F
A20R35	0698-3446	3		RESISTOR 383 1% .125W F TC=0+-100	24546	CT4-1/8-T0-383R-F
A20R36	0698-3156	2	1	RESISTOR 14.7K 1% .125W F TC=0+-100	24546	CT4-1/8-T0-1472-F
A20R37	0757-0199	3	1	RESISTOR 21.5K 1% .125W F TC=0+-100	24546	CT4-1/8-T0-2152-F
A20R38	2100-3253	7	1	RESISTOR-TRMR 50K 10% C TOP-ADJ 1-TRN	28480	2100-3253
A20R39	0757-0397	3	1	RESISTOR 68.1 1% .125W F TC=0+-100	24546	CT4-1/8-T0-68R1-F
A20R40	0757-0277	8	2	RESISTOR 49.9 1% .125W F TC=0+-100	28480	0757-0277
A20R41	0698-3132	4	2	RESISTOR 261 1% .125W F TC=0+-100	24546	CT4-1/8-T0-2610-F
A20R42	0757-0294	9	1	RESISTOR 17.8 1% .125W F TC=0+-100	19701	5033R-1/8-T0-17R8-F
A20R43	0698-3132	4		RESISTOR 261 1% .125W F TC=0+-100	24546	CT4-1/8-T0-2610-F

*** Indicates factory selected value.**

Table 3. A20 Replaceable Parts (4 of 4)

Reference Designator	HP Part Number	C D	Qty.	Description	Mfr Code	Mfr Part Number
A20R44	0698-3447	4	2	RESISTOR 422 1% .125W F TC=0+-100	24546	CT4-1/8-T0-422R-F
A20R45	0757-0379	1	1	RESISTOR 12.1 1% .125W F TC=0+-100	19701	5033R-1/8-T0-12R1-F
A20R46	0698-3447	4		RESISTOR 422 1% .125W F TC=0+-100	24546	CT4-1/8-T0-422R-F
A20R47	0698-3153	9		RESISTOR 3.83K 1% .125W F TC=0+-100	24546	CT4-1/8-T0-3831-F
A20R48	0757-0277	8		RESISTOR 49.9 1% .125W F TC=0+-100	28480	0757-0277
A20R49	0698-3153	9		RESISTOR 3.83K 1% .125W F TC=0+-100	24546	CT4-1/8-T0-3831-F
A20R50	0757-0401	0		RESISTOR 100 1% .125W F TC=0+-100	24546	CT4-1/8-T0-101-F
A20R51	0757-0439	4	2	RESISTOR 6.81K 1% .125W F TC=0+-100	24546	CT4-1/8-T0-6811-F
A20R52	0698-3153	9		RESISTOR 3.83K 1% .125W F TC=0+-100	24546	CT4-1/8-T0-3831-F
A20R53	0698-0083	8	4	RESISTOR 1.96K 1% .125W F TC=0+-100	24546	CT4-1/8-T0-1961-F
A20R54	0698-0083	8		RESISTOR 1.96K 1% .125W F TC=0+-100	24546	CT4-1/8-T0-1961-F
A20R55	0757-0401	0		RESISTOR 100 1% .125W F TC=0+-100	24546	CT4-1/8-T0-101-F
A20R56	0698-3153	9		RESISTOR 3.83K 1% .125W F TC=0+-100	24546	CT4-1/8-T0-3831-F
A20R57	0698-0083	8		RESISTOR 1.96K 1% .125W F TC=0+-100	24546	CT4-1/8-T0-1961-F
A20R58	0698-0083	8		RESISTOR 1.96K 1% .125W F TC=0+-100	24546	CT4-1/8-T0-1961-F
A20R59	0757-0439	4		RESISTOR 6.81K 1% .125W F TC=0+-100	24546	CT4-1/8-T0-6811-F
A20R60	0698-3153	9		RESISTOR 3.83K 1% .125W F TC=0+-100	24546	CT4-1/8-T0-3831-F
A20R61-A20R69				NOT ASSIGNED		
A20R70	0757-0442	9		RESISTOR 10K 1% .125W F TC=0+-100	24546	CT4-1/8-T0-1002-F
A20R71-A20R80				NOT ASSIGNED		
A20R81	0757-0465	6	2	RESISTOR 100K 1% .125W F TC=0+-100	24546	CT4-1/8-T0-1003-F
A20R82	0757-0465	6		RESISTOR 100K 1% .125W F TC=0+-100	24546	CT4-1/8-T0-1003-F
A20RT1	0837-0384	8	1	THERMISTOR 330 5%		
A20U1	1826-0147	9	1	IC 7812 V RGLTR TO-220	04713	MC7812CP
A20W1	04195-61652	4		WIRE ASSEMBLY 8PIN	28480	04195-61652
A20W1	04195-61652	4	2	WIRE ASSY	28480	04195-61652
	04195-00810		1	CASE SHIELD, COMPONENT SIDE		
	04195-00716		1	CASE SHIELD, CIRCUIT SIDE		

*** Indicates factory selected value.**

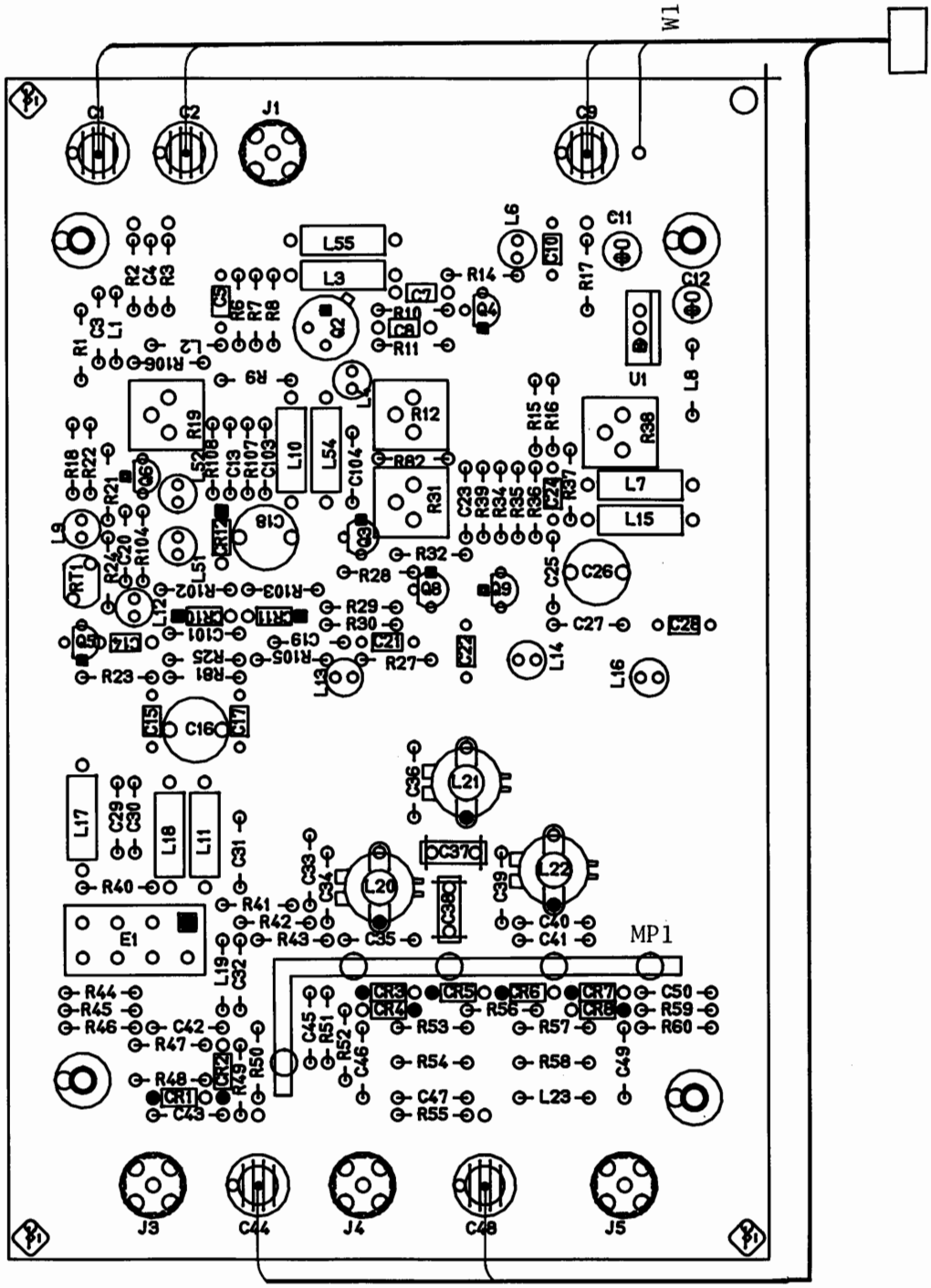

A20 Receiver Third IF Converter Component Locations

A20 RECEIVER 3rd IF CONVERTER

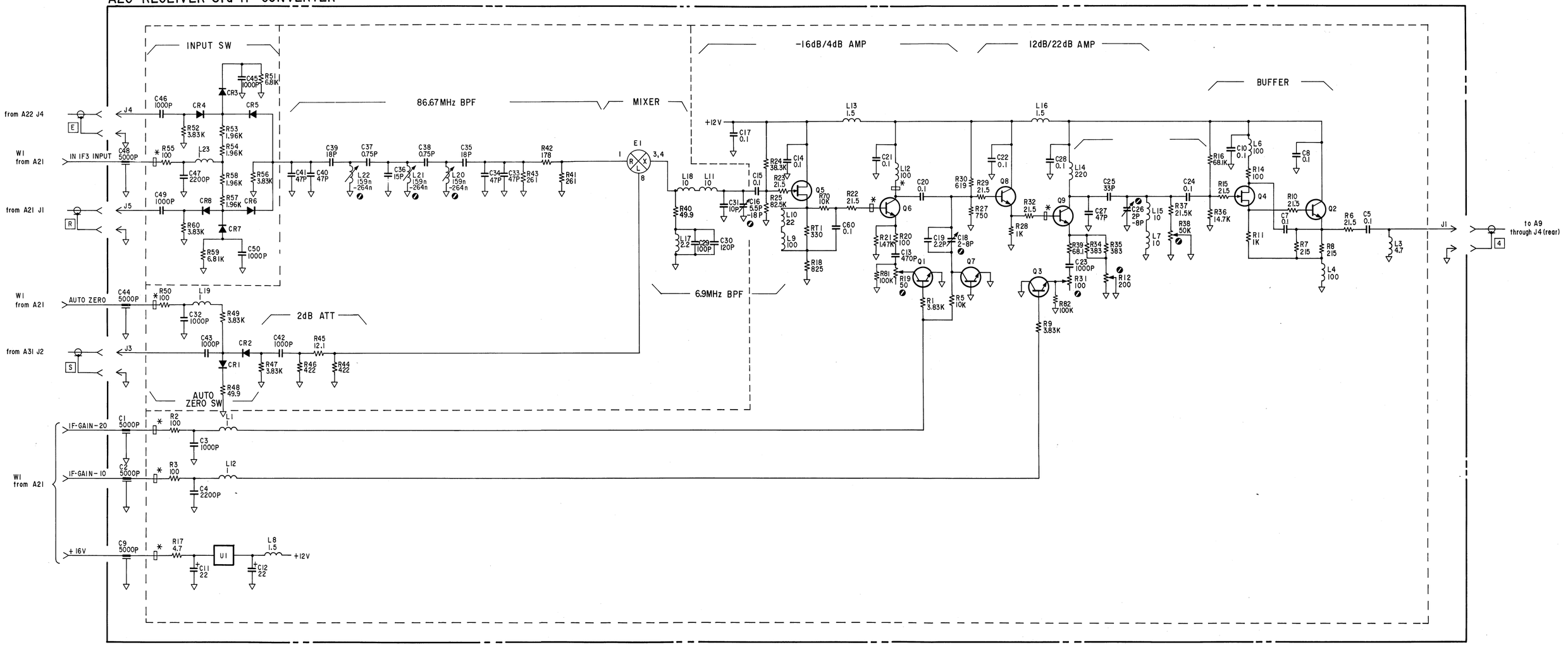

NOTES:

1. REFERENCE DESIGNATORS WITHIN THIS ASSEMBLY ARE ABBREVIATED. PREFIX ABBREVIATION WITH ASSEMBLY NUMBER FOR COMPLETE REFERENCE DESIGNATOR.

2. UNLESS OTHERWISE INDICATED:

   RESISTANCE IN OHMS (Ω)
   CAPACITANCE IN MICROFARADS (µF)
   INDUCTANCE IN MICROHENRIES (µH)

3. ADJUSTMENT NAMES

A20C16	6.9 MHz BPF ADJ
A20C18	20 dB AMPL PHASE ADJ
A20C26	6.3 MHz BPF ADJ
A20L20	86.6 MHz BPF ADJ
A20L21	86.6 MHz BPF ADJ
A20L22	86.6 MHz BPF ADJ
A20R12	6.6 MHz LEVEL ADJ
A20R19	20 dB AMPL GAIN ADJ
A20R31	10 dB AMPL GAIN ADJ
A20R38	FLATNESS ADJ

RECEIVER 2ND IF CONVERTER SERVICE SHEET

The A21 receiver second IF converter converts the 246.6 MHz signal from the A22 board to a 86.6 MHz signal, and feeds it to the A20 first IF converter board. The A21 board generates the control signals for the input attenuators (on boards A27 to A30) by using the control signals from the A8 measurement control processor board.

CIRCUIT DESCRIPTION:

The A21 receiver second IF converter consists of a 246.6 MHz bandpass filter, a mixer, a 100 MHz lowpass filter, a 20 dB amplifier, a 86.6 MHz bandpass filter, etc. The second IF converter is used when the measurement frequency is < 150 MHz.

Mixer E1 mixes the 160 MHz LO signal from the A130 board with the 246.6 MHz signal which filtered by the 246.6 MHz bandpass filter. The mixed signal is filtered by a 100 MHz LPF, and the 86.6 MHz signal, the difference frequency between the 246.6 MHz input signal and the LO signal, is fed to a 20 dB amplifier where it is amplified, filtered by a 86.6 MHz BPF, and output to the A20 receiver third IF converter.

Shift registers U1 and U4 uses control signals from the A8 board to produce the input attenuator control signals for the A27, A28, A29, and A30 boards. The shift register output signals are fed to drivers U2 or U5.

Table 1. A21 Replaceable Parts (1 of 3)

Reference Designator	HP Part Number	C D	Qty.	Description	Mfr Code	Mfr Part Number
A21				RECEIVER 2ND IF CONVERTER		
A21	04195-66521	6	1	RCVR 2ND IF BD'Y	28480	04195-66521
A21C1	0160-6561	0	10	CAPACITOR-FXD .1UF +-20% 50VDC CER	16299	CAC02Z5U104M050A
A21C2	0160-6561	0		CAPACITOR-FXD .1UF +-20% 50VDC CER	16299	CAC02Z5U104M050A
A21C3	0180-3363	6	2	CAPACITOR-FXD 22UF+-20% 25VDC AL	28480	0180-3363
A21C4	0160-2437	1	1	CAPACITOR-FDTHRU 5000PF +80 -20% 200V	28480	0160-2437
	2580-0006	8	1	NUT-HEX	28480	2580-0006
	9170-1397	0	1	BEAD INDUCTOR	28480	9170-1397
A21C5	0180-3363	6		CAPACITOR-FXD 22UF+-20% 25VDC AL	28480	0180-3363
A21C6	0160-6561	0		CAPACITOR-FXD .1UF +-20% 50VDC CER	16299	CAC02Z5U104M050A
A21C7	0160-4788	9	2	CAPACITOR-FXD 18PF +-5% 100VDC CER 0+-30	28480	0160-4788
A21C8	0160-4805	1	4	CAPACITOR-FXD 47PF +-5% 100VDC CER 0+-30	28480	0160-4805
A21C9	0160-4805	1		CAPACITOR-FXD 47PF +-5% 100VDC CER 0+-30	28480	0160-4805
A21C10	0160-6561	0		CAPACITOR-FXD .1UF +-20% 50VDC CER	16299	CAC02Z5U104M050A
A21C11	0160-6561	0		CAPACITOR-FXD .1UF +-20% 50VDC CER	16299	CAC02Z5U104M050A
A21C12	0160-4789	0	4	CAPACITOR-FXD 15PF +-5% 100VDC CER 0+-30	28480	0160-4789
A21C13	0160-4786	7	1	CAPACITOR-FXD 27PF +-5% 100VDC CER 0+-30	28480	0160-4786
A21C14	0160-4789	0		CAPACITOR-FXD 15PF +-5% 100VDC CER 0+-30	28480	0160-4789
A21C15	0160-6561	0		CAPACITOR-FXD .1UF +-20% 50VDC CER	16299	CAC02Z5U104M050A
A21C16	0160-6561	0		CAPACITOR-FXD .1UF +-20% 50VDC CER	16299	CAC02Z5U104M050A
A21C17	0160-6561	0		CAPACITOR-FXD .1UF +-20% 50VDC CER	16299	CAC02Z5U104M050A
A21C18	0160-6561	0		CAPACITOR-FXD .1UF +-20% 50VDC CER	16299	CAC02Z5U104M050A
A21C19	0160-6561	0		CAPACITOR-FXD .1UF +-20% 50VDC CER	16299	CAC02Z5U104M050A
A21C20	0160-4805	1		CAPACITOR-FXD 47PF +-5% 100VDC CER 0+-30	28480	0160-4805
A21C21	0160-4805	1		CAPACITOR-FXD 47PF +-5% 100VDC CER 0+-30	28480	0160-4805
A21C22	0160-4788	9		CAPACITOR-FXD 18PF +-5% 100VDC CER 0+-30	28480	0160-4788
A21C23	0160-2235	7	4	CAPACITOR-FXD .75PF +-.25PF 500VDC CER	28480	0160-2235
A21C24	0160-4789	0		CAPACITOR-FXD 15PF +-5% 100VDC CER 0+-30	28480	0160-4789
A21C25	0160-2235	7		CAPACITOR-FXD .75PF +-.25PF 500VDC CER	28480	0160-2235
A21C26	0160-4795	8	2	CAPACITOR-FXD 4.7PF +-.5PF 100VDC CER	28480	0160-4795
A21C27	0160-2235	7		CAPACITOR-FXD .75PF +-.25PF 500VDC CER	28480	0160-2235
A21C28	0160-4799	2	3	CAPACITOR-FXD 2.2PF +-.25PF 100VDC CER	28480	0160-4799
A21C29	0160-4794	7	1	CAPACITOR-FXD 5.6PF +-.5PF 100VDC CER	28480	0160-4794
A21C30	0160-2234	6	2	CAPACITOR-FXD .51PF +-.25PF 500VDC CER	28480	0160-2234
A21C31	0160-4799	2		CAPACITOR-FXD 2.2PF +-.25PF 100VDC CER	28480	0160-4799
A21C32	0160-2234	6		CAPACITOR-FXD .51PF +-.25PF 500VDC CER	28480	0160-2234
A21C33	0160-4795	8		CAPACITOR-FXD 4.7PF +-.5PF 100VDC CER	28480	0160-4795
A21C34	0160-2235	7		CAPACITOR-FXD .75PF +-.25PF 500VDC CER	28480	0160-2235
A21C35	0160-4799	2		CAPACITOR-FXD 2.2PF +-.25PF 100VDC CER	28480	0160-4799
A21C36	0160-4789	0		CAPACITOR-FXD 15PF +-5% 100VDC CER 0+-30	28480	0160-4789
A21E1	1906-0235	6	1	DIODE	28480	1906-0235
A21J1	1250-0257	1	3	CONNECTOR-RF SMB M PC 50-OHM	28480	1250-0257
A21J2	1251-5722	7	1	CONN-POST TYPE .100-PIN-SPCG 50-CONT	28480	1251-5722
A21J3	1250-0835	1	1	CONNECTOR-RF SMC M PC 50-OHM	28480	1250-0835
A21J4	1250-0257	1		CONNECTOR-RF SMB M PC 50-OHM	28480	1250-0257
A21J5-A21J19				NOT ASSIGNED		
A21J20	1252-1304	5	2	CONN-POST TYPE 2.5-PIN-SPCG 8-CONT	28480	1252-1304
A21J21				NOT ASSIGNED		
A21J22	1251-6527	2	2	CONNECTOR 6-PIN M METRIC POST TYPE	28480	1251-6527
A21J23	1251-7463	7	1	CONN-POST TYPE 2.5-PIN-SPCG 12-CONT	27264	22-04-1121
A21J24	1251-6527	2		CONNECTOR 6-PIN M METRIC POST TYPE	28480	1251-6527

*** Indicates factory selected value.**

Table 1. A21 Replaceable Parts (2 of 3)

Reference Designator	HP Part Number	C D	Qty.	Description	Mfr Code	Mfr Part Number
A21J25A	1251-5066	2	4	CONN-POST TYPE 2.5-PIN-SPCG 2-CONT	28480	1251-5066
A21J25B	1251-5066	2		CONN-POST TYPE 2.5-PIN-SPCG 2-CONT	28480	1251-5066
A21J25C	1251-5066	2		CONN-POST TYPE 2.5-PIN-SPCG 2-CONT	28480	1251-5066
A21J25D	1251-5066	2		CONN-POST TYPE 2.5-PIN-SPCG 2-CONT	28480	1251-5066
A21J26	1251-7406	8	1	CONNECTOR 10-PIN M METRIC POST TYPE	28480	1251-7406
A21J27	1251-5862	6	4	CONNECTOR 4-PIN M METRIC POST TYPE	28480	1251-5862
A21J28	1251-5862	6		CONNECTOR 4-PIN M METRIC POST TYPE	28480	1251-5862
A21J29	1251-5862	6		CONNECTOR 4-PIN M METRIC POST TYPE	28480	1251-5862
A21J30	1251-5862	6		CONNECTOR 4-PIN M METRIC POST TYPE	28480	1251-5862
A21J31- A21J129				NOT ASSIGNED		
A21J130	1252-1304	5		CONN-POST TYPE 2.5-PIN-SPCG 8-CONT	28480	1252-1304
A21L1	9100-2259	8	2	INDUCTOR RF-CH-MLD 1.5UH 10%	28480	9100-2259
A21L2	9100-3548	0	1	INDUCTOR RF-CH-MLD 470NH 5%	28480	9100-3548
A21L3	9100-2259	8		INDUCTOR RF-CH-MLD 1.5UH 10%	28480	9100-2259
A21L4	9140-1304	6	3	COIL-VAR 159NH-264NH Q=65 PC-MTG	S4218	E502-AN-8000019
A21L5	9100-2249	6	1	INDUCTOR RF-CH-MLD 150NH 10%	28480	9100-2249
A21L6	9100-0368	6	1	INDUCTOR RF-CH-MLD 330NH 10%	28480	9100-0368
A21L7	9140-1304	6		COIL-VAR 159NH-264NH Q=65 PC-MTG	S4218	E502-AN-8000019
A21L8	9140-1304	6		COIL-VAR 159NH-264NH Q=65 PC-MTG	S4218	E502-AN-8000019
A21L9	9140-1303	5	3	COIL-VAR 73NH-111NH Q=80 PC-MTG	S4218	3502AN-4000014
A21L10	9140-1303	5		COIL-VAR 73NH-111NH Q=80 PC-MTG	S4218	3502AN-4000014
A21L11	9140-1303	5		COIL-VAR 73NH-111NH Q=80 PC-MTG	S4218	3502AN-4000014
A21Q1	1854-1073	1	2	TRANSISTOR NPN SI PD=600MW FT=6.5GHZ	28480	1854-1073
	9170-0029	3	2	CORE-SHIELDING BEAD	28480	9170-0029
A21Q2	1854-1073	1		TRANSISTOR NPN SI PD=600MW FT=6.5GHZ	28480	1854-1073
	9170-0029	3		CORE-SHIELDING BEAD	28480	9170-0029
A21R1	0757-0280	3	3	RESISTOR 1K 1% .125W F TC=0+-100	24546	CT4-1/8-T0-1001-F
A21R2	1810-0557	2	2	NETWORK-RES 16-DIP 22.0 OHM X 8	28480	1810-0557
A21R3	0683-0475	1	1	RESISTOR 4.7 5% .25W CF TC=0-400	01121	CB47G5
A21R4	0698-3439	4	1	RESISTOR 178 1% .125W F TC=0+-100	24546	CT4-1/8-T0-178R-F
A21R5	0698-3438	3	3	RESISTOR 147 1% .125W F TC=0+-100	24546	CT4-1/8-T0-147R-F
A21R6	0698-3429	2	2	RESISTOR 19.6 1% .125W F TC=0+-100	03888	PME55-1/8-T0-19R6-F
A21R7	0757-0418	9	1	RESISTOR 619 1% .125W F TC=0+-100	24546	CT4-1/8-T0-619R-F
A21R8	0698-3438	3		RESISTOR 147 1% .125W F TC=0+-100	24546	CT4-1/8-T0-147R-F
A21R9	2100-0568	1	1	RESISTOR-TRMR 100 10% C TOP-ADJ 1-TRN	28480	2100-0568
A21R10	0698-3438	3		RESISTOR 147 1% .125W F TC=0+-100	24546	CT4-1/8-T0-147R-F
A21R11	0757-0280	3		RESISTOR 1K 1% .125W F TC=0+-100	24546	CT4-1/8-T0-1001-F
A21R12	1810-0557	2		NETWORK-RES 16-DIP 22.0 OHM X 8	28480	1810-0557
A21R13	0757-0401	0	2	RESISTOR 100 1% .125W F TC=0+-100	24546	CT4-1/8-T0-101-F
A21R14	0757-0401	0		RESISTOR 100 1% .125W F TC=0+-100	24546	CT4-1/8-T0-101-F
A21R15	0698-3429	2		RESISTOR 19.6 1% .125W F TC=0+-100	03888	PME55-1/8-T0-19R6-F
A21R16	0757-0277	8	1	RESISTOR 49.9 1% .125W F TC=0+-100	28480	0757-0277
A21R17	0698-4037	0	4	RESISTOR 46.4 1% .125W F TC=0+-100	28480	0698-4037
A21R18	0698-4037	0		RESISTOR 46.4 1% .125W F TC=0+-100	28480	0698-4037
A21R19	0698-4037	0		RESISTOR 46.4 1% .125W F TC=0+-100	28480	0698-4037
A21R20	0698-4037	0		RESISTOR 46.4 1% .125W F TC=0+-100	28480	0698-4037
A21R21	0757-0399	5	2	RESISTOR 82.5 1% .125W F TC=0+-100	24546	CT4-1/8-T0-82R5-F
A21R22	0757-0399	5		RESISTOR 82.5 1% .125W F TC=0+-100	24546	CT4-1/8-T0-82R5-F
A21R23	0757-0403	2	2	RESISTOR 121 1% .125W F TC=0+-100	24546	CT4-1/8-T0-121R-F
A21R24	0757-0403	2		RESISTOR 121 1% .125W F TC=0+-100	24546	CT4-1/8-T0-121R-F
A21R25	0757-0280	3		RESISTOR 1K 1% .125W F TC=0+-100	24546	CT4-1/8-T0-1001-F

*** Indicates factory selected value.**

Table 1. A21 Replaceable Parts (3 of 3)

Reference Designator	HP Part Number	C D	Qty.	Description	Mfr Code	Mfr Part Number
A21R26	0698-3132	4	4	RESISTOR 261 1% .125W F TC=0+-100	24546	CT4-1/8-T0-2610-F
A21R27	0757-0294	9	2	RESISTOR 17.8 1% .125W F TC=0+-100	19701	5033R-1/8-T0-17R8-F
A21R28	0698-3132	4		RESISTOR 261 1% .125W F TC=0+-100	24546	CT4-1/8-T0-2610-F
A21R29	0698-3132	4		RESISTOR 261 1% .125W F TC=0+-100	24546	CT4-1/8-T0-2610-F
A21R30	0757-0294	9		RESISTOR 17.8 1% .125W F TC=0+-100	19701	5033R-1/8-T0-17R8-F
A21R31	0698-3132	4		RESISTOR 261 1% .125W F TC=0+-100	24546	CT4-1/8-T0-2610-F
A21U1	1820-3344	2	2	IC SHF-RGTR CMOS/74HC ASYNCHRO SERIAL-IN	04713	MC74HC595N
A21U2	1820-2273	4	2	IC DRVR TTL PRPHL GP OCTL	13606	UDN-2981A
A21U3	1826-0147	9	1	IC 7812 V RGLTR TO-220	04713	MC7812CP
A21U4	1820-3344	2		IC SHF-RGTR CMOS/74HC ASYNCHRO SERIAL-IN	04713	MC74HC595N
A21U5	1820-2273	4		IC DRVR TTL PRPHL GP OCTL	13606	UDN-2981A
	04195-00809		1	CASE SHIELD, COMPONENT SIDE		
	04195-00655		1	CASE SHIELD, CIRCUIT SIDE		

*** Indicates factory selected value.**

Table 2. A21 Connector Pin Assignments

A21J2

+5 V	1	2	+5 V
+5 V	3	4	+16 V
+16 V	5	6	+16 V
	7	8	-16 V
-16 V	9	10	-16 V
IN-LPF-SLCT	11	12	-16 V
IN-BPF-L-SLCT	13	14	IN-BPF-M-SLCT
IN-BPF-H-SLCT	15	16	-16 V
IN-BPF-L-TUNE	17	18	IN-BPF-M-TUNE
IN-BPF-H-TUNE	19	20	GND-RTN
CH1-IN-AT	21	22	CH2-IN-AT
CMDT	23	24	EOD
GND	25	26	IN-MPX-T1
IN-MPX-R1	27	28	IN-MPX-T2
IN-MPX-R2	29	30	AUTO-ZERO
HF-OVLD	31	32	LF-OVLD
+7 V	33	34	SPECT-MODE
+7 V	35	36	IN-IF1-MXR-PATH
IN-IF1-MXR-LO	37	38	+7 V
IF-GAIN-20	39	40	IN-IF3-INPUT
GND	41	42	IF-GAIN-10
ALC-OFF	43	44	LEVEL-DTCT-RTN
ALC-DA-DC	45	46	LEVEL-DTCT
+16 V	47	48	+16 V
+16 V	49	50	+16 V

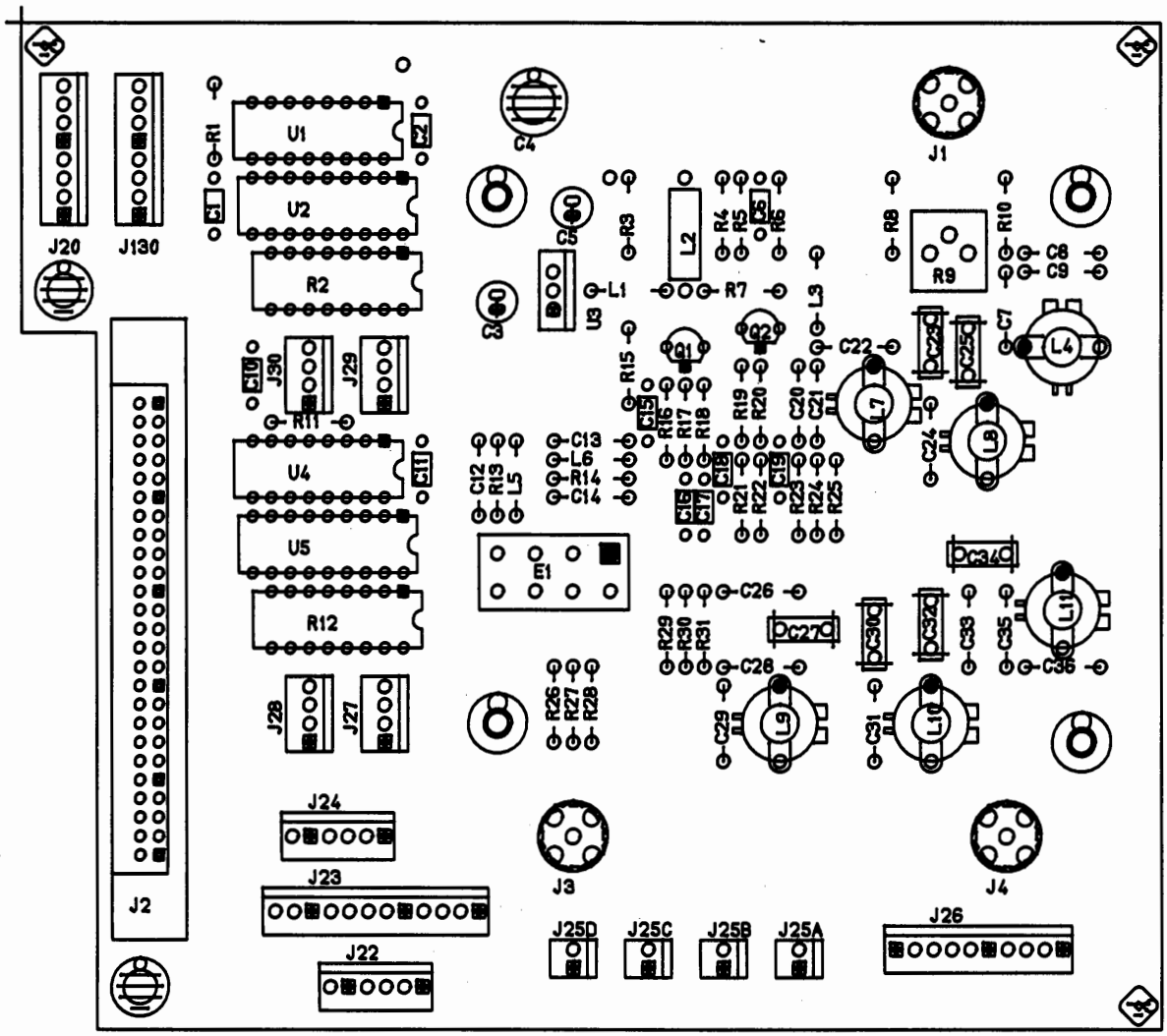

A21 Receiver Second IF Converter Component Locations

A21 RECEIVER 2nd IF CONVERTER

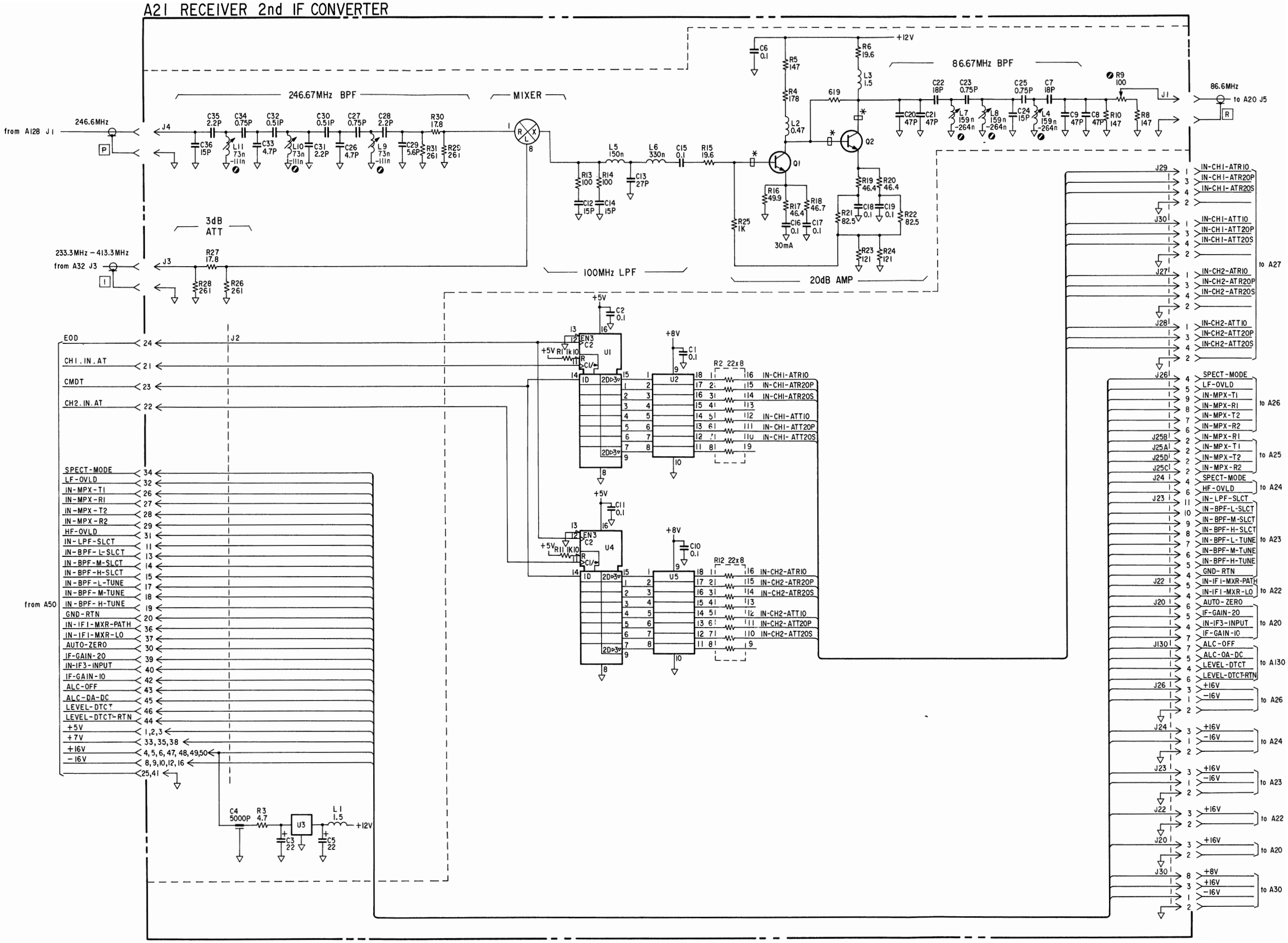

NOTES:

1. REFERENCE DESIGNATORS WITHIN THIS ASSEMBLY ARE ABBREVIATED. PREFIX ABBREVIATION WITH ASSEMBLY NUMBER FOR COMPLETE REFERENCE DESIGNATOR.

2. UNLESS OTHERWISE INDICATED:

   RESISTANCE IN OHMS (Ω)
   CAPACITANCE IN MICROFARADS (μF)
   INDUCTANCE IN MICROHENRIES (μH)

3. ADJUSTMENT NAMES

A21L1	246 MHz BPF ADJ
A21L2	246 MHz BPF ADJ
A21L3	246 MHz BPF ADJ
A21L8	86.6 MHz BPF ADJ
A21L9	86.6 MHz BPF ADJ
A21L10	86.6 MHz BPF ADJ
A21R9	86.6 MHz LEVEL ADJ

RECEIVER 1ST IF CONVERTER SERVICE SHEET

The receiver first IF converter converts the input signal to a 86.6 MHz IF signal which is fed to the third IF converter, or to a 246.6 MHz IF signal which is fed to the second IF converter.

CIRCUIT DESCRIPTION:

The A22 receiver first IF converter board consists of two mixers, IF amplifiers, IF switch, a 86.6 MHz bandpass filter, a 246.6 MHz bandpass filter, etc. The A128 board is a 400 MHz lowpass filter which filters out the unwanted frequency components (residual response). Figure 1 shows the block diagram of the A22 board.

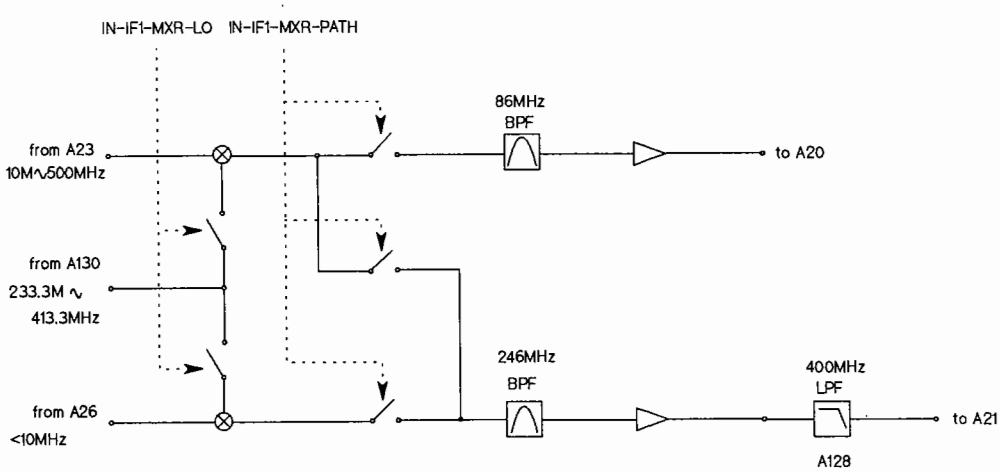

Figure 1. Receiver First IF Converter Block Diagram

Mixer E1 mixes the LO signal (233.3 MHz to 413.3 MHz) from the A10 board with the input signal (≥10 MHz) from the A23 input filter. Mixer E2 mixes the LO signal with the input signal (<10 MHz) from the A26 LF multiplexer.

Switching transistors Q1 and Q2 are used to select the path for the LO signal, and switching diodes CR1, CR2, and CR3 are used to select the path for the mixer IF signal. The switching transistors and diodes are controlled by the IN-IF1-MXR-LO and IN-IF1-MXR-PATH signals, respectively. The control signals relate to the measurement frequency, as shown in Table 1.

Table 1. Measurement Frequency and Signal Path

Measurement Frequency (Fm MHz)	Control Signal		Signal Path
	IN-IF1-MXR-LO	IN-IF1-MXR-PATH	
150 ≤ Fm ≤ 500	Low	High	E1 to 86 MHz BPF
10 ≤ Fm < 150	Low	Low	E1 to 246 MHz BPF
Fm < 10	High	High	E2 to 246 MHz BPF

Control Signal Level: High: approx. +10 V
Low: approx. -10 V

For example, if the two control signals are low, switching transistor Q1 is ON and Q2 is OFF, switching diode CR2 is ON, and CR1 and CR3 are OFF. So the LO signal is fed to E1 through Q1 circuit, and the mixer IF signal is fed through CR2 to the 246.6 MHz BPF filter.

The mixer IF signal passes through the 86.6 MHz or 246.6 MHz bandpass filters, and is amplified by the corresponding IF amplifier. The A22 board outputs the 86.6 MHz signal to the A20 board when the measurement frequency is $\geq$ 150 MHz, and outputs the 246.6 MHz IF signal to the A21 board when the measurement frequency is $<$ 150 MHz.

The total gain of the A22 board is approximately 6 dB, R47 and R52 are used to adjust the gain.

Table 2. A22 Replaceable Parts (1 of 4)

Reference Designator	HP Part Number	C D	Qty.	Description	Mfr Code	Mfr Part Number
A22				RECEIVER 1ST IF CONVERTER		
A22	04195-66522	7	1	RCVR 1ST IF BD'Y	28480	04195-66522
A22C1	0160-2437	1	3	CAPACITOR-FDTHRU 5000PF +80 -20% 200V	28480	0160-2437
	2580-0006	8	3	NUT-HEX	28480	2580-0006
	9170-1397	0	1	BEAD INDUCTOR	28480	9170-1397
A22C2	0160-4797	0	1	CAPACITOR-FXD 3.3PF +-.25PF 100VDC CER	28480	0160-4797
A22C3	0160-4830	2	7	CAPACITOR-FXD 2200PF +-10% 100VDC CER	28480	0160-4830
A22C4	0160-4830	2		CAPACITOR-FXD 2200PF +-10% 100VDC CER	28480	0160-4830
A22C5	0160-4830	2		CAPACITOR-FXD 2200PF +-10% 100VDC CER	28480	0160-4830
A22C6	0160-4830	2		CAPACITOR-FXD 2200PF +-10% 100VDC CER	28480	0160-4830
A22C7	0160-4830	2		CAPACITOR-FXD 2200PF +-10% 100VDC CER	28480	0160-4830
A22C8	0160-4799	2	8	CAPACITOR-FXD 2.2PF +-.25PF 100VDC CER	28480	0160-4799
A22C9	0160-4832	4	4	CAPACITOR-FXD .01UF +-10% 100VDC CER	28480	0160-4832
A22C10	0160-4832	4		CAPACITOR-FXD .01UF +-10% 100VDC CER	28480	0160-4832
A22C11	0160-4799	2		CAPACITOR-FXD 2.2PF +-.25PF 100VDC CER	28480	0160-4799
A22C12	0160-4832	4		CAPACITOR-FXD .01UF +-10% 100VDC CER	28480	0160-4832
A22C13	0160-4789	0	2	CAPACITOR-FXD 15PF +-5% 100VDC CER 0+-30	28480	0160-4789
A22C14	0160-4799	2		CAPACITOR-FXD 2.2PF +-.25PF 100VDC CER	28480	0160-4799
A22C15	0160-4786	7	1	CAPACITOR-FXD 27PF +-5% 100VDC CER 0+-30	28480	0160-4786
A22C16	0160-4787	8	6	CAPACITOR-FXD 22PF +-5% 100VDC CER 0+-30	28480	0160-4787
A22C17	0160-4787	8		CAPACITOR-FXD 22PF +-5% 100VDC CER 0+-30	28480	0160-4787
A22C18	0160-4787	8		CAPACITOR-FXD 22PF +-5% 100VDC CER 0+-30	28480	0160-4787
A22C19	0160-4799	2		CAPACITOR-FXD 2.2PF +-.25PF 100VDC CER	28480	0160-4799
A22C20	0160-4790	3	1	CAPACITOR-FXD 12PF +-5% 100VDC CER 0+-30	28480	0160-4790
A22C21	0160-4832	4		CAPACITOR-FXD .01UF +-10% 100VDC CER	28480	0160-4832
A22C22	0160-4788	9	1	CAPACITOR-FXD 18PF +-5% 100VDC CER 0+-30	28480	0160-4788
A22C23	0160-2235	7	4	CAPACITOR-FXD .75PF +-.25PF 500VDC CER	28480	0160-2235
A22C24	0160-4830	2		CAPACITOR-FXD 2200PF +-10% 100VDC CER	28480	0160-4830
A22C25	0160-4789	0		CAPACITOR-FXD 15PF +-5% 100VDC CER 0+-30	28480	0160-4789
A22C26	0160-2236	8	2	CAPACITOR-FXD 1PF +-.25PF 500VDC CER	28480	0160-2236
A22C27	0160-2235	7		CAPACITOR-FXD .75PF +-.25PF 500VDC CER	28480	0160-2235
A22C28	0160-4799	2		CAPACITOR-FXD 2.2PF +-.25PF 100VDC CER	28480	0160-4799
A22C29	0160-4814	2	2	CAPACITOR-FXD 150PF +-5% 100VDC CER	28480	0160-4814
A22C30	0160-4787	8		CAPACITOR-FXD 22PF +-5% 100VDC CER 0+-30	28480	0160-4787
A22C31	0160-2235	7		CAPACITOR-FXD .75PF +-.25PF 500VDC CER	28480	0160-2235
A22C32	0160-4799	2		CAPACITOR-FXD 2.2PF +-.25PF 100VDC CER	28480	0160-4799
A22C33	0160-2235	7		CAPACITOR-FXD .75PF +-.25PF 500VDC CER	28480	0160-2235
A22C34	0160-4806	2	1	CAPACITOR-FXD 39PF +-5% 100VDC CER 0+-30	28480	0160-4806
A22C35	0160-4798	1	1	CAPACITOR-FXD 2.7PF +-.25PF 100VDC CER	28480	0160-4798
A22C36	0160-2236	8		CAPACITOR-FXD 1PF +-.25PF 500VDC CER	28480	0160-2236
A22C37	0160-4799	2		CAPACITOR-FXD 2.2PF +-.25PF 100VDC CER	28480	0160-4799
A22C38	0160-4814	2		CAPACITOR-FXD 150PF +-5% 100VDC CER	28480	0160-4814
A22C39	0160-6561	0	5	CAPACITOR-FXD .1UF +-20% 50VDC CER	16299	CAC02Z5U104M050A
A22C40	0160-6561	0		CAPACITOR-FXD .1UF +-20% 50VDC CER	16299	CAC02Z5U104M050A
A22C41	0160-4787	8		CAPACITOR-FXD 22PF +-5% 100VDC CER 0+-30	28480	0160-4787
A22C42	0160-4799	2		CAPACITOR-FXD 2.2PF +-.25PF 100VDC CER	28480	0160-4799
A22C43	0160-6561	0		CAPACITOR-FXD .1UF +-20% 50VDC CER	16299	CAC02Z5U104M050A
A22C44	0160-4787	8		CAPACITOR-FXD 22PF +-5% 100VDC CER 0+-30	28480	0160-4787
A22C45	0160-6561	0		CAPACITOR-FXD .1UF +-20% 50VDC CER	16299	CAC02Z5U104M050A
A22C46	0180-3363	6	2	CAPACITOR-FXD 22UF+-20% 25VDC AL	28480	0180-3363
A22C47	0160-4830	2		CAPACITOR-FXD 2200PF +-10% 100VDC CER	28480	0160-4830
A22C48	0160-6561	0		CAPACITOR-FXD .1UF +-20% 50VDC CER	16299	CAC02Z5U104M050A
A22C49	0180-3363	6		CAPACITOR-FXD 22UF+-20% 25VDC AL	28480	0180-3363

*** Indicates factory selected value.**

Table 2. A22 Replaceable Parts (2 of 4)

Reference Designator	HP Part Number	C D	Qty.	Description	Mfr Code	Mfr Part Number
A22C50	0160-2437	1		CAPACITOR-FDTHRU 5000PF +80 -20% 200V	28480	0160-2437
	2580-0006	8		NUT-HEX	28480	2580-0006
	8150-3490	5	2	WIRE	28480	8150-3490
A22C51	0160-2437	1		CAPACITOR-FDTHRU 5000PF +80 -20% 200V	28480	0160-2437
	2580-0006	8		NUT-HEX	28480	2580-0006
	8150-3490	5	2	WIRE	28480	8150-3490
A22C52	0121-0060	0	1	CAPACITOR-V TRMR-CER 2-8PF 350V PC-MTG	52763	304322 2/8PF NPO
A22C53	0160-4493	3	2	CAPACITOR-FXD 27PF +-5% 200VDC CER 0+-30	28480	0160-4493
A22C54	0160-4493	3		CAPACITOR-FXD 27PF +-5% 200VDC CER 0+-30	28480	0160-4493
A22C55	0160-4491	1	2	CAPACITOR-FXD 8.2PF +-.5PF 200VDC CER	28480	0160-4491
A22C56	0160-4491	1		CAPACITOR-FXD 8.2PF +-.5PF 200VDC CER	28480	0160-4491
A22CR1	1901-0948	8	3	DIODE-SWITCHING 30V 100MA	28480	1901-0948
A22CR2	1901-0948	8		DIODE-SWITCHING 30V 100MA	28480	1901-0948
A22CR3	1901-0948	8		DIODE-SWITCHING 30V 100MA	28480	1901-0948
A22E1	0955-0413	4	1	U-WAVE MIXER 2.5 GHZ MAX	15542	ROK-186MH
A22E2	0955-0415	6	1	U-WAVE MIXER 750 MHZ MAX	15542	SRA-1W-X
A22J1	1250-0257	1	4	CONNECTOR-RF SMB M PC 50-OHM	28480	1250-0257
A22J2	1250-0835	1	1	CONNECTOR-RF SMC M PC 50-OHM	28480	1250-0835
A22J3	1250-0257	1		CONNECTOR-RF SMB M PC 50-OHM	28480	1250-0257
A22J4	1250-0257	1		CONNECTOR-RF SMB M PC 50-OHM	28480	1250-0257
A22J5	1250-0257	1		CONNECTOR-RF SMB M PC 50-OHM	28480	1250-0257
A22L1	9140-0158	6	3	INDUCTOR RF-CH-MLD 1UH 10%	28480	9140-0158
A22L2	9140-1304	6	4	COIL-VAR 159NH-264NH Q=65 PC-MTG	S4218	E502-AN-8000019
A22L3	9140-1298	7	1	COIL-VAR 93NH-145NH Q=75 PC-MTG	S4218	E502AN-500005
A22L4	9140-1300	2	1	COIL-VAR 24NH-29NH Q=85 PC-MTG	S4218	E502AN-1000019
A22L5	9140-1303	5	3	COIL-VAR 73NH-111NH Q=80 PC-MTG	S4218	3502AN-4000014
A22L6	9140-1304	6		COIL-VAR 159NH-264NH Q=65 PC-MTG	S4218	E502-AN-8000019
A22L7	9140-1304	6		COIL-VAR 159NH-264NH Q=65 PC-MTG	S4218	E502-AN-8000019
A22L8	9140-1303	5		COIL-VAR 73NH-111NH Q=80 PC-MTG	S4218	3502AN-4000014
A22L9	9140-1304	6		COIL-VAR 159NH-264NH Q=65 PC-MTG	S4218	E502-AN-8000019
A22L10	9140-1303	5		COIL-VAR 73NH-111NH Q=80 PC-MTG	S4218	3502AN-4000014
A22L11	9100-2259	8	3	INDUCTOR RF-CH-MLD 1.5UH 10%	28480	9100-2259
A22L12	9100-2259	8		INDUCTOR RF-CH-MLD 1.5UH 10%	28480	9100-2259
A22L13	9140-0158	6		INDUCTOR RF-CH-MLD 1UH 10%	28480	9140-0158
A22L14	9100-2259	8		INDUCTOR RF-CH-MLD 1.5UH 10%	28480	9100-2259
A22L15	9140-0158	6		INDUCTOR RF-CH-MLD 1UH 10%	28480	9140-0158
A22L16	9100-2247	4	2	INDUCTOR RF-CH-MLD 100NH 10%	28480	9100-2247
A22L17	9100-2247	4		INDUCTOR RF-CH-MLD 100NH 10%	28480	9100-2247
A22L18	9100-2891	4	1	INDUCTOR RF-CH-MLD 50NH 10%	28480	9100-2891
A22MP1	04195-00701		1	PLATE SHIELD		
A22Q1	1854-1074	2	2	TRANSISTOR NPN SI PD=200MW FT=.03HZ	28480	1854-1074
A22Q2	1854-1074	2		TRANSISTOR NPN SI PD=200MW FT=.03HZ	28480	1854-1074
A22Q3	1854-1073	1	4	TRANSISTOR NPN SI PD=600MW FT=6.5GHZ	28480	1854-1073
	9170-0029	3	4	CORE-SHIELDING BEAD	28480	9170-0029
A22Q4	1854-1073	1		TRANSISTOR NPN SI PD=600MW FT=6.5GHZ	28480	1854-1073
	9170-0029	3		CORE-SHIELDING BEAD	28480	9170-0029
A22Q5	1854-1073	1		TRANSISTOR NPN SI PD=600MW FT=6.5GHZ	28480	1854-1073
	9170-0029	3		CORE-SHIELDING BEAD	28480	9170-0029
A22Q6	1854-1073	1		TRANSISTOR NPN SI PD=600MW FT=6.5GHZ	28480	1854-1073
	9170-0029	3		CORE-SHIELDING BEAD	28480	9170-0029
A22R1	0757-0278	9	2	RESISTOR 1.78K 1% .125W F TC=0+-100	24546	CT4-1/8-T0-1781-F
A22R2	0698-0083	8	2	RESISTOR 1.96K 1% .125W F TC=0+-100	24546	CT4-1/8-T0-1961-F

*** Indicates factory selected value.**

Table 2. A22 Replaceable Parts (3 of 4)

Reference Designator	HP Part Number	C D	Qty.	Description	Mfr Code	Mfr Part Number
A22R3	0698-0083	8		RESISTOR 1.96K 1% .125W F TC=0+-100	24546	CT4-1/8-T0-1961-F
A22R4	0757-0278	9		RESISTOR 1.78K 1% .125W F TC=0+-100	24546	CT4-1/8-T0-1781-F
A22R5	0757-0401	0	12	RESISTOR 100 1% .125W F TC=0+-100	24546	CT4-1/8-T0-101-F
A22R6	0698-3447	4	2	RESISTOR 422 1% .125W F TC=0+-100	24546	CT4-1/8-T0-422R-F
A22R7	0757-0379	1	1	RESISTOR 12.1 1% .125W F TC=0+-100	19701	5033R-1/8-T0-12R1-F
A22R8	0698-3447	4		RESISTOR 422 1% .125W F TC=0+-100	24546	CT4-1/8-T0-422R-F
A22R9	0698-3132	4	2	RESISTOR 261 1% .125W F TC=0+-100	24546	CT4-1/8-T0-2610-F
A22R10	0757-0294	9	1	RESISTOR 17.8 1% .125W F TC=0+-100	19701	5033R-1/8-T0-17R8-F
A22R11	0698-3132	4		RESISTOR 261 1% .125W F TC=0+-100	24546	CT4-1/8-T0-2610-F
A22R12	0757-0403	2	4	RESISTOR 121 1% .125W F TC=0+-100	24546	CT4-1/8-T0-121R-F
A22R13	0698-4037	0	2	RESISTOR 46.4 1% .125W F TC=0+-100	28480	0698-4037
A22R14	0757-0403	2		RESISTOR 121 1% .125W F TC=0+-100	24546	CT4-1/8-T0-121R-F
A22R15	0698-3439	4	2	RESISTOR 178 1% .125W F TC=0+-100	24546	CT4-1/8-T0-178R-F
A22R16	0757-0180	2	1	RESISTOR 31.6 1% .125W F TC=0+-100	28480	0757-0180
A22R17	0698-3439	4		RESISTOR 178 1% .125W F TC=0+-100	24546	CT4-1/8-T0-178R-F
A22R18	0757-0346	2	3	RESISTOR 10 1% .125W F TC=0+-100	28480	0757-0346
A22R19	0757-0277	8	1	RESISTOR 49.9 1% .125W F TC=0+-100	28480	0757-0277
A22R20	0757-0401	0		RESISTOR 100 1% .125W F TC=0+-100	24546	CT4-1/8-T0-101-F
A22R21	0757-0401	0		RESISTOR 100 1% .125W F TC=0+-100	24546	CT4-1/8-T0-101-F
A22R22	0698-3153	9	5	RESISTOR 3.83K 1% .125W F TC=0+-100	24546	CT4-1/8-T0-3831-F
A22R23	0698-3153	9		RESISTOR 3.83K 1% .125W F TC=0+-100	24546	CT4-1/8-T0-3831-F
A22R24	0698-3153	9		RESISTOR 3.83K 1% .125W F TC=0+-100	24546	CT4-1/8-T0-3831-F
A22R25	0757-0401	0		RESISTOR 100 1% .125W F TC=0+-100	24546	CT4-1/8-T0-101-F
A22R26	0757-0401	0		RESISTOR 100 1% .125W F TC=0+-100	24546	CT4-1/8-T0-101-F
A22R27	0698-3153	9		RESISTOR 3.83K 1% .125W F TC=0+-100	24546	CT4-1/8-T0-3831-F
A22R28	0757-0401	0		RESISTOR 100 1% .125W F TC=0+-100	24546	CT4-1/8-T0-101-F
A22R29	0757-0401	0		RESISTOR 100 1% .125W F TC=0+-100	24546	CT4-1/8-T0-101-F
A22R30	0698-3153	9		RESISTOR 3.83K 1% .125W F TC=0+-100	24546	CT4-1/8-T0-3831-F
A22R31	0698-3435	0	2	RESISTOR 38.3 1% .125W F TC=0+-100	28480	0698-3435
A22R32	0698-3438	3	4	RESISTOR 147 1% .125W F TC=0+-100	24546	CT4-1/8-T0-147R-F
A22R33	0757-0280	3	2	RESISTOR 1K 1% .125W F TC=0+-100	24546	CT4-1/8-T0-1001-F
A22R34	0757-0401	0		RESISTOR 100 1% .125W F TC=0+-100	24546	CT4-1/8-T0-101-F
A22R35	0757-0401	0		RESISTOR 100 1% .125W F TC=0+-100	24546	CT4-1/8-T0-101-F
A22R36	0698-3430	5	2	RESISTOR 21.5 1% .125W F TC=0+-100	03888	PME55-1/8-T0-215R-F
A22R37	0698-3444	1	4	RESISTOR 316 1% .125W F TC=0+-100	24546	CT4-1/8-T0-316R-F
A22R38	0698-3444	1		RESISTOR 316 1% .125W F TC=0+-100	24546	CT4-1/8-T0-316R-F
A22R39	0698-3435	0		RESISTOR 38.3 1% .125W F TC=0+-100	28480	0698-34356
A22R40	0698-3438	3		RESISTOR 147 1% .125W F TC=0+-100	24546	CT4-1/8-T0-147R-F
A22R41	0757-0280	3		RESISTOR 1K 1% .125W F TC=0+-100	24546	CT4-1/8-T0-1001-F
A22R42	0757-0401	0		RESISTOR 100 1% .125W F TC=0+-100	24546	CT4-1/8-T0-101-F
A22R43	0757-0401	0		RESISTOR 100 1% .125W F TC=0+-100	24546	CT4-1/8-T0-101-F
A22R44	0698-3430	5	2	RESISTOR 21.5 1% .125W F TC=0+-100	03888	PME55-1/8-T0-21R5-F
A22R45	0757-0418	9	1	RESISTOR 619 1% .125W F TC=0+-100	24546	CT4-1/8-T0-619R-F
A22R46	0698-3438	3		RESISTOR 147 1% .125W F TC=0+-100	24546	CT4-1/8-T0-147R-F
A22R47	2100-0568	1	1	RESISTOR-TRMR 100 10% C TOP-ADJ 1-TRN	28480	2100-0568
A22R48	0698-3438	3		RESISTOR 147 1% .125W F TC=0+-100	24546	CT4-1/8-T0-147R-F
A22R49	0757-0346	2		RESISTOR 10 1% .125W F TC=0+-100	28480	0757-0346
A22R50	0757-0401	0		RESISTOR 100 1% .125W F TC=0+-100	24546	CT4-1/8-T0-101-F
A22R51	0698-3444	1		RESISTOR 316 1% .125W F TC=0+-100	24546	CT4-1/8-T0-316R-F
A22R52	2100-3383	4	1	RESISTOR-TRMR 50 10% C TOP-ADJ 1-TRN	28480	2100-3383
A22R53	0698-3444	1		RESISTOR 316 1% .125W F TC=0+-100	24546	CT4-1/8-T0-316R-F
A22R54	0757-0346	2		RESISTOR 10 1% .125W F TC=0+-100	28480	0757-0346
A22R55	0698-0475	1	1	RESISTOR 4.7 5% .25W CF TC=0-400	01121	CB47G5

*** Indicates factory selected value.**

Table 2. A22 Replaceable Parts (4 of 4)

Reference Designator	HP Part Number	C D	Qty.	Description	Mfr Code	Mfr Part Number
A22R56	0757-0416	7	1	RESISTOR 511 1% .125W F TC=0+-100	24546	CT4-1/8-T0-511R-F
A22R57	0757-0394	0	1	RESISTOR 51.1 1% .125W F TC=0+-100	24546	CT4-1/8-T0-51R1-F
A22R58	0757-0199	3	1	RESISTOR 21.5K 1% .125W F TC=0+-100	24546	CT4-1/8-T0-2152-F
A22R59	2100-3253	7	1	RESISTOR-TRMR 50K 10% C TOP-ADJ 1-TRN	28480	2100-3253
A22U1	1826-0147	9	1	IC 7812 V RGLTR TO-220	04713	MC7812CP
A22W1	04195-61653	5	1	WIRE ASSEMBLY 6PIN	28480	04195-61653
	04195-00670		1	CASE SHIELD, COMPONENT SIDE		
	04195-00709		1	CASE SHIELD, CIRCUIT SIDE		

*** Indicates factory selected value.**

Table 3. A128 Replaceable Parts

Reference Designator	HP Part Number	C D	Qty.	Description	Mfr Code	Mfr Part Number
A128				RECEIVER 1ST IF LOWPASS FILTER		
A128	04195-66528	3	1	400MHZ LPF	28480	04195-66528
A128C1	0160-4903	0	5	CAPACITOR-FXD 3.3PF +-.1PF 200VDC CER	28480	0160-4903
A128C2	0160-4903	0		CAPACITOR-FXD 3.3PF +-.1PF 200VDC CER	28480	0160-4903
A128C3	0160-4491	1	1	CAPACITOR-FXD 8.2PF +-.5PF 200VDC CER	28480	0160-4491
A128C4	0160-4903	0		CAPACITOR-FXD 3.3PF +-.1PF 200VDC CER	28480	0160-4903
A128C5	0160-4903	0		CAPACITOR-FXD 3.3PF +-.1PF 200VDC CER	28480	0160-4903
A128C6	0160-4903	0		CAPACITOR-FXD 3.3PF +-.1PF 200VDC CER	28480	0160-4903
A128J1	1250-0835	1	2	CONNECTOR-RF SMC M PC 50-OHM	28480	1250-0835
A128J2	1250-0835	1		CONNECTOR-RF SMC M PC 50-OHM	28480	1250-0835
A128L1	9100-2891	4	4	INDUCTOR RF-CH-MLD 50NH 10%	28480	9100-2891
A128L2	9100-2891	4		INDUCTOR RF-CH-MLD 50NH 10%	28480	9100-2891
A128L3	9100-2891	4		INDUCTOR RF-CH-MLD 50NH 10%	28480	9100-2891
A128L4	9100-2891	4		INDUCTOR RF-CH-MLD 50NH 10%	28480	9100-2891
	04195-00718		1	CASE SHIELD, COMPONENT SIDE		
	04195-00717		1	CASE SHIELD, CIRCUIT SIDE		

*** Indicates factory selected value.**

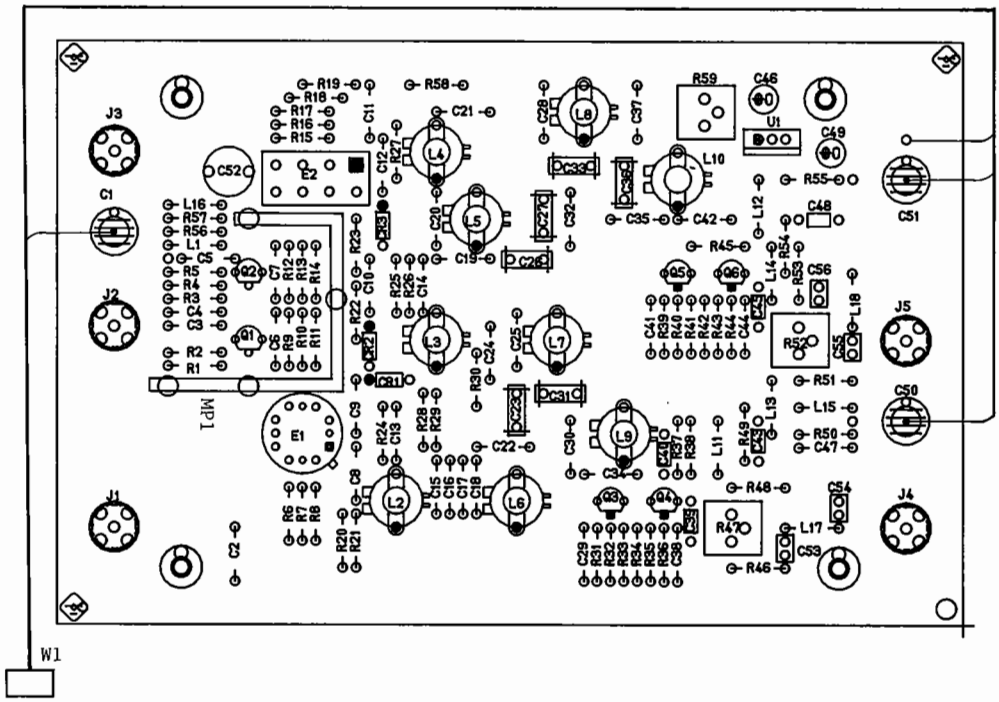

A22 Receiver First IF Converter Component Locations

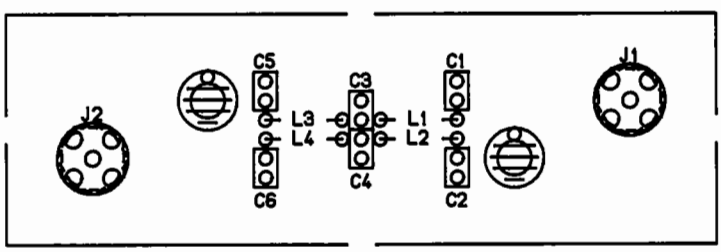

A128 Receiver First IF Lowpass Filter Component Locations

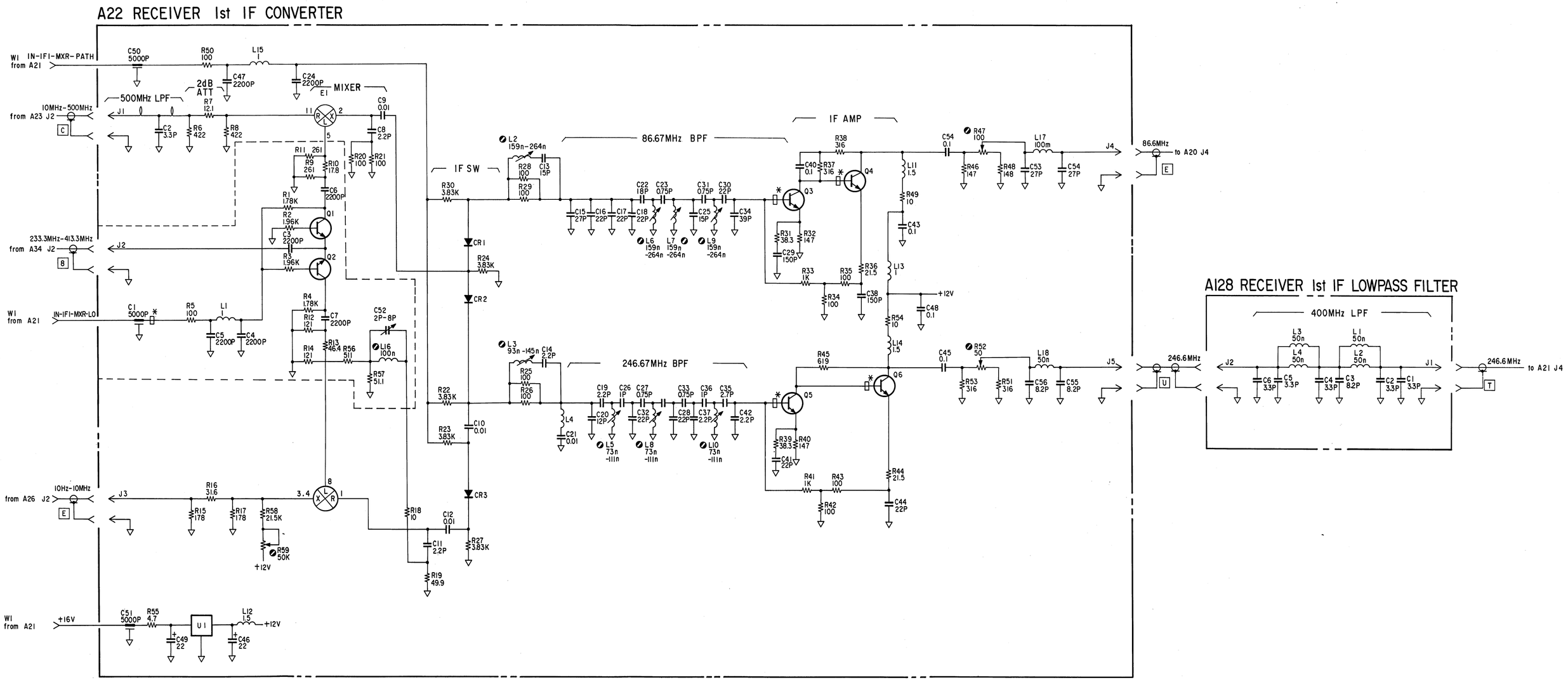
A22 RECEIVER 1st IF CONVERTER
W1 IN-IF1-MXR-PATH from A21
10MHz-500MHz from A23 J2
233.3MHz-413.3MHz from A34 J2
W1 from A21 IN-IF1-MXR-LO
10Hz-10MHz from A26 J2
W1 from A21 +16V
500MHz LPF
2dB ATT
MIXER
E1
IF SW
86.67MHz BPF
246.67MHz BPF
IF AMP
86.6MHz to A20 J4
246.6MHz
A128 RECEIVER 1st IF LOWPASS FILTER
400MHz LPF
246.6MHz to A21 J4
+12V

NOTES:

1. REFERENCE DESIGNATORS WITHIN THIS ASSEMBLY ARE ABBREVIATED. PREFIX ABBREVIATION WITH ASSEMBLY NUMBER FOR COMPLETE REFERENCE DESIGNATOR.

2. UNLESS OTHERWISE INDICATED:

   RESISTANCE IN OHMS (Ω)
   CAPACITANCE IN MICROFARADS (μF)
   INDUCTANCE IN MICROHENRIES (μH)

3. ADJUSTMENT NAMES

A22C52	LOCAL LEAK ADJ1
A22L2	86.6 MHz BPF ADJ
A22L3	246 MHz BPF ADJ
A22L5	246 MHz BPF ADJ
A22L6	86.6 MHz BPF ADJ
A22L7	86.6 MHz BPF ADJ
A22L8	246 MHz BPF ADJ
A22L9	86.6 MHz BPF ADJ
A22L10	246 MHz BPF ADJ
A22R47	86.6 MHz LEVEL ADJ
A22R52	246 MHz LEVEL ADJ
A22R59	LOCAL LEAK ADJ2

RECEIVER INPUT FILTER SERVICE SHEET

The A23 Receiver Input Filter board filters out the unwanted image frequency components included in the signal from the A24 High Frequency Multiplexer Buffer.

CIRCUIT DESCRIPTION:

The A23 board consists of the three voltage tunable bandpass filters, a 150 MHz Low Pass Filter, and a 10 dB amplifier. The input signal passes through one of the three voltage tunable BPFs or through the 150 MHz lowpass filter, and is amplified by the 10 dB amplifier. The filter, through which the input signal passes, is selected by select signals: IN-BPF-H-SLCT, IN-BPF-M-SLCT, IN-BPF-L-SLCT, and IN-LPF-SLCT.

The select signals depend on the measurement frequency. For example, if the measurement frequency is 300 MHz, the IN-BPF-M-SLCT signal will be negative (approx. -10 V), and the input signal will pass through the **225 MHz to 340 MHz BPF**. The relationship of the select signal, filter, and measurement frequency is shown in Table 1.

Table 1. Input Filter Selection

Select Signal	Selected Filter	Measurement Frequency (Fm)
IN-BPF-H-SLCT	340 MHz to 500 MHz BPF	340 MHz $\leq$ Fm $\leq$ 500 MHz
IN-BPF-M-SLCT	225 MHz to 340 MHz BPF	225 MHz $\leq$ Fm < 340 MHz
IN-BPF-L-SLCT	150 MHz to 225 MHz BPF	150 MHz $\leq$ Fm < 225 MHz
IN-LPF-SLCT	150 MHz LPF	10 MHz $\leq$ Fm < 150 MHz

VOLTAGE TUNABLE BANDPASS FILTER:

The voltage tunable bandpass filter filters out the unwanted image frequency components from the input signal. The pass band is shifted by the level of the IN-BPF-H-TUNE, IN-BPF-M-TUNE, and IN-BPF-L-TUNE signals, and shifts to the higher frequencies as the signal level is incremented. The control signal levels range from approximately 4 V to 30 V.

150 MHz LOWPASS FILTER:

The 150 MHz LPF filters out the unwanted frequency components from the input signal. When the IN-LPF-SLCT signal is negative (approx. -10 V), switching diodes CR1, CR11, and CR27 are forward biased (ON), and the input signal passes through the 150 MHz lowpass filter.

10 dB AMPLIFIER:

The 10 dB amplifier amplifies the signal which passes through the BPFs or the 150 MHz LPF.

TROUBLESHOOTING GUIDE:

1. Voltage Tunable Filter Select Signal/Control Signal Waveform:

Setting:

Oscilloscope:

CHAN 1:	10 V/div
CHAN 2:	10 V/div
TIME:	100 msec/div
TRIGGER:	CHAN 1, -Slope
TRIGGER LEVEL:	0 V

GRAPH 1:
C27 (IN-BPF-H-SLCT)
GRAPH 2:
C28 (IN-BPF-H-TUNE)

Waveform:

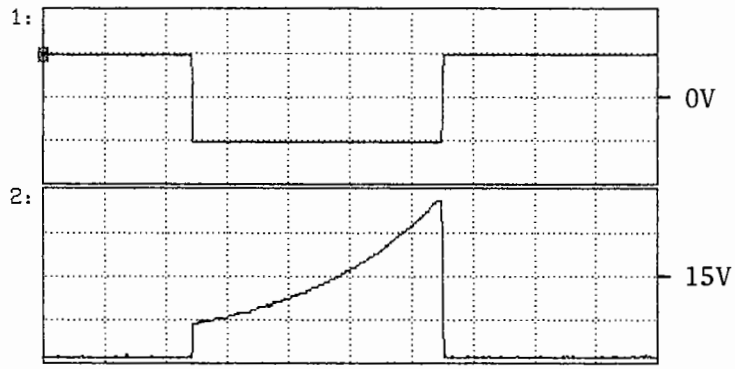

2. 10 dB Amplifier Input/Output Waveform:

The following waveforms will be displayed when the signal generator output is connected to the HP 4195A INPUT R1 connector.

Setting:

Oscilloscope:

CHAN 1:	100 mV/div
CHAN 2:	100 mV/div
TIME:	10 nsec/div
TRIGGER:	CHAN 2, -Slope
TRIGGER LEVEL:	0 V

HP 4195A:

CONFIG:	SPECTRUM
INPUT PORT:	R1
CENTER:	50 MHz
SPAN:	0 MHz

Signal Generator:

FREQUENCY:	50 MHz
AMPLITUDE:	10 dBm

GRAPH 1:
C47 (R38 side lead)
GRAPH 2:
C52 (C51 side lead)

Waveform:

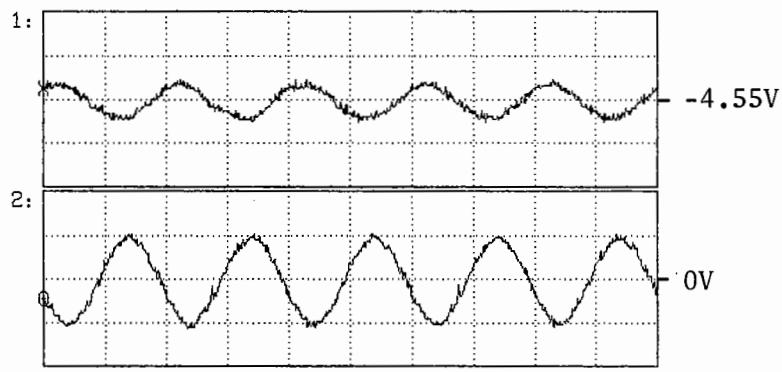

Table 2. A23 Replaceable Parts (1 of 5)

Reference Designator	HP Part Number	C D	Qty.	Description	Mfr Code	Mfr Part Number
A23				RECEIVER INPUT FILTER		
A23	04195-66523	8	1	INPUT FILTER BD	28480	04195-66523
A23C1	0160-2437	1	9	CAPACITOR-FDTHRU 5000PF +80 -20% 200V	28480	0160-2437
	2580-0006	8	9	NUT-HEX	28480	2580-0006
	8150-3490	5	9	WIRE	28480	8150-3490
A23C2	0160-2437	1		CAPACITOR-FDTHRU 5000PF +80 -20% 200V	28480	0160-2437
	2580-0006	8		NUT-HEX	28480	2580-0006
	8150-3490	5		WIRE	28480	8150-3490
A23C3	0160-2437	1		CAPACITOR-FDTHRU 5000PF +80 -20% 200V	28480	0160-2437
	2580-0006	8		NUT-HEX	28480	2580-0006
	8150-3490	5		WIRE	28480	8150-3490
A23C4	0160-6561	0	26	CAPACITOR-FXD .1UF +-20% 50VDC CER	16299	CAC02Z5U104M050A
A23C5	0160-4830	2	15	CAPACITOR-FXD 2200PF +-10% 100VDC CER	28480	0160-4830
A23C6	0160-4832	4	4	CAPACITOR-FXD .01UF +-10% 100VDC CER	28480	0160-4832
A23C7	0160-6561	0		CAPACITOR-FXD .1UF +-20% 50VDC CER	16299	CAC02Z5U104M050A
A23C8	0160-4789	0	4	CAPACITOR-FXD 15PF +-5% 100VDC CER 0+-30	28480	0160-4789
A23C9	0160-4789	0		CAPACITOR-FXD 15PF +-5% 100VDC CER 0+-30	28480	0160-4789
A23C10	0160-4830	2		CAPACITOR-FXD 2200PF +-10% 100VDC CER	28480	0160-4830
A23C11	0160-4807	3	2	CAPACITOR-FXD 33PF +-5% 100VDC CER 0+-30	28480	0160-4807
A23C12	0160-6561	0		CAPACITOR-FXD .1UF +-20% 50VDC CER	16299	CAC02Z5U104M050A
A23C13	0160-4807	3		CAPACITOR-FXD 33PF +-5% 100VDC CER 0+-30	28480	0160-4807
A23C14	0160-4830	2		CAPACITOR-FXD 2200PF +-10% 100VDC CER	28480	0160-4830
A23C15	0160-4789	0		CAPACITOR-FXD 15PF +-5% 100VDC CER 0+-30	28480	0160-4789
A23C16	0160-4789	0		CAPACITOR-FXD 15PF +-5% 100VDC CER 0+-30	28480	0160-4789
A23C17	0160-6561	0		CAPACITOR-FXD .1UF +-20% 50VDC CER	16299	CAC02Z5U104M050A
A23C18	0160-4832	4		CAPACITOR-FXD .01UF +-10% 100VDC CER	28480	0160-4832
A23C19	0160-6561	0		CAPACITOR-FXD .1UF +-20% 50VDC CER	16299	CAC02Z5U104M050A
A23C20	0160-6561	0		CAPACITOR-FXD .1UF +-20% 50VDC CER	16299	CAC02Z5U104M050A
A23C21	0160-4795	8	2	CAPACITOR-FXD 4.7PF +-.5PF 100VDC CER	28480	0160-4795
A23C22	0180-3363	6	6	CAPACITOR-FXD 22UF+-20% 25VDC AL	28480	0180-3363
A23C23	0180-3363	6		CAPACITOR-FXD 22UF+-20% 25VDC AL	28480	0180-3363
A23C24	0180-3363	6		CAPACITOR-FXD 22UF+-20% 25VDC AL	28480	0180-3363
A23C25	0160-6561	0		CAPACITOR-FXD .1UF +-20% 50VDC CER	16299	CAC02Z5U104M050A
A23C26	0160-2437	1		CAPACITOR-FDTHRU 5000PF +80 -20% 200V	28480	0160-2437
	2580-0006	8		NUT-HEX	28480	2580-0006
	8150-3490	5		WIRE	28480	8150-3490
A23C27	0160-2437	1		CAPACITOR-FDTHRU 5000PF +80 -20% 200V	28480	0160-2437
	2580-0006	8		NUT-HEX	28480	2580-0006
	8150-3490	5		WIRE	28480	8150-3490
A23C28	0160-2437	1		CAPACITOR-FDTHRU 5000PF +80 -20% 200V	28480	0160-2437
	2580-0006	8		NUT-HEX	28480	2580-0006
	8150-3490	5		WIRE	28480	8150-3490
A23C29	0160-6561	0		CAPACITOR-FXD .1UF +-20% 50VDC CER	16299	CAC02Z5U104M050A
A23C30	0160-4832	4		CAPACITOR-FXD .01UF +-10% 100VDC CER	28480	0160-4832
A23C31	0160-6561	0		CAPACITOR-FXD .1UF +-20% 50VDC CER	16299	CAC02Z5U104M050A
A23C32	0160-4830	2		CAPACITOR-FXD 2200PF +-10% 100VDC CER	28480	0160-4830
A23C33	0160-6561	0		CAPACITOR-FXD .1UF +-20% 50VDC CER	16299	CAC02Z5U104M050A
A23C34	0160-4830	2		CAPACITOR-FXD 2200PF +-10% 100VDC CER	28480	0160-4830
A23C35	0160-6561	0		CAPACITOR-FXD .1UF +-20% 50VDC CER	16299	CAC02Z5U104M050A
A23C36	0160-4830	2		CAPACITOR-FXD 2200PF +-10% 100VDC CER	28480	0160-4830
A23C37	0160-6561	0		CAPACITOR-FXD .1UF +-20% 50VDC CER	16299	CAC02Z5U104M050A
A23C38	0160-4830	2		CAPACITOR-FXD 2200PF +-10% 100VDC CER	28480	0160-4830
A23C39	0160-6561	0		CAPACITOR-FXD .1UF +-20% 50VDC CER	16299	CAC02Z5U104M050A
A23C40	0160-6561	0		CAPACITOR-FXD .1UF +-20% 50VDC CER	16299	CAC02Z5U104M050A
A23C41	0160-4830	2		CAPACITOR-FXD 2200PF +-10% 100VDC CER	28480	0160-4830
A23C42	0160-6561	0		CAPACITOR-FXD .1UF +-20% 50VDC CER	16299	CAC02Z5U104M050A

*** Indicates factory selected value.**

Table 2. A23 Replaceable Parts (2 of 5)

Reference Designator	HP Part Number	C D	Qty.	Description	Mfr Code	Mfr Part Number
A23C43	0160-6561	0		CAPACITOR-FXD .1UF +-20% 50VDC CER	16299	CAC02Z5U104M050A
A23C44	0160-4830	2		CAPACITOR-FXD 2200PF +-10% 100VDC CER	28480	0160-4830
A23C45	0160-4830	2		CAPACITOR-FXD 2200PF +-10% 100VDC CER	28480	0160-4830
A23C46	0160-4830	2		CAPACITOR-FXD 2200PF +-10% 100VDC CER	28480	0160-4830
A23C47	0160-4832	4		CAPACITOR-FXD .01UF +-10% 100VDC CER	28480	0160-4832
A23C48	0160-6561	0		CAPACITOR-FXD .1UF +-20% 50VDC CER	16299	CAC02Z5U104M050A
A23C49	0160-6561	0		CAPACITOR-FXD .1UF +-20% 50VDC CER	16299	CAC02Z5U104M050A
A23C50	0160-4795	8		CAPACITOR-FXD 4.7PF +-.5PF 100VDC CER	28480	0160-4795
A23C51	0160-6561	0		CAPACITOR-FXD .1UF +-20% 50VDC CER	16299	CAC02Z5U104M050A
A23C52	0160-6561	0		CAPACITOR-FXD .1UF +-20% 50VDC CER	16299	CAC02Z5U104M050A
A23C53	0160-2437	1		CAPACITOR-FDTHRU 5000PF +80 -20% 200V	28480	0160-2437
	2580-0006	8		NUT-HEX	28480	2580-0006
	8150-3490	5		WIRE	28480	8150-3490
A23C54	0160-2437	1		CAPACITOR-FDTHRU 5000PF +80 -20% 200V	28480	0160-2437
	2580-0006	8		NUT-HEX	28480	2580-0006
	8150-3490	5		WIRE	28480	8150-3490
A23C55	0160-4830	2		CAPACITOR-FXD 2200PF +-10% 100VDC CER	28480	0160-4830
A23C56	0160-6561	0		CAPACITOR-FXD .1UF +-20% 50VDC CER	16299	CAC02Z5U104M050A
A23C57	0160-4830	2		CAPACITOR-FXD 2200PF +-10% 100VDC CER	28480	0160-4830
A23C58	0160-4830	2		CAPACITOR-FXD 2200PF +-10% 100VDC CER	28480	0160-4830
A23C59	0160-6561	0		CAPACITOR-FXD .1UF +-20% 50VDC CER	16299	CAC02Z5U104M050A
A23C60	0160-4830	2		CAPACITOR-FXD 2200PF +-10% 100VDC CER	28480	0160-4830
A23C61	0160-6561	0		CAPACITOR-FXD .1UF +-20% 50VDC CER	16299	CAC02Z5U104M050A
A23C62	0160-4790	3	1	CAPACITOR-FXD 12PF +-5% 100VDC CER 0+-30	28480	0160-4790
A23C63	0160-6561	0		CAPACITOR-FXD .1UF +-20% 50VDC CER	16299	CAC02Z5U104M050A
A23C64	0160-6561	0		CAPACITOR-FXD .1UF +-20% 50VDC CER	16299	CAC02Z5U104M050A
A23C65	0180-3363	6		CAPACITOR-FXD 22UF+-20% 25VDC AL	28480	0180-3363
A23C66	0160-6561	0		CAPACITOR-FXD .1UF +-20% 50VDC CER	16299	CAC02Z5U104M050A
A23C67	0180-3363	6		CAPACITOR-FXD 22UF+-20% 25VDC AL	28480	0180-3363
A23C68	0180-3363	6		CAPACITOR-FXD 22UF+-20% 25VDC AL	28480	0180-3363
A23C69	0160-2437	1		CAPACITOR-FDTHRU 5000PF +80 -20% 200V	28480	0160-2437
	2580-0006	8		NUT-HEX	28480	2580-0006
	8150-3490	5		WIRE	28480	8150-3490
A23CR1	1901-0948	8	17	DIODE-SWITCHING 30V 100MA	28480	1901-0948
A23CR2 A23CR5 A23CR6 A23CR9	5080-3866		4	MATCHED FOUR DIODE SET (when replacing one of CR2, CR5, CR6, and CR9, replace all of above four diodes by this diode set)	28480	5080-3866
A23CR3 A23CR4 A23CR7 A23CR8	5080-3866			MATCHED FOUR DIODE SET (when replacing one of CR3, CR4, CR7, and CR8, replace all of above four diodes by this diode set)	28480	5080-3866
A23CR10	1901-0948	8		DIODE-SWITCHING 30V 100MA	28480	1901-0948
A23CR11	1901-0948	8		DIODE-SWITCHING 30V 100MA	28480	1901-0948
A23CR12	1901-0948	8		DIODE-SWITCHING 30V 100MA	28480	1901-0948
A23CR13	1901-0948	8		DIODE-SWITCHING 30V 100MA	28480	1901-0948
A23CR14	1901-0948	8		DIODE-SWITCHING 30V 100MA	28480	1901-0948
A23CR15	1901-0948	8		DIODE-SWITCHING 30V 100MA	28480	1901-0948
A23CR16	1901-0948	8		DIODE-SWITCHING 30V 100MA	28480	1901-0948
A23CR17	1901-0948	8		DIODE-SWITCHING 30V 100MA	28480	1901-0948

*** Indicates factory selected value.**

Table 2. A23 Replaceable Parts (3 of 5)

Reference Designator	HP Part Number	C D	Qty.	Description	Mfr Code	Mfr Part Number
A23CR18 A23CR21 A23CR22 A23CR25	5080-3865		2	MATCHED FOUR DIODE SET (when replacing one of CR18, CR21, CR22, and CR25, replace all of above four diodes by this diode set)	28480	5080-3866
A23CR19 A23CR20 A23CR23 A23CR24	5080-3865			MATCHED FOUR DIODE SET (when replacing one of CR19, CR20, CR23, and CR24, replace all of above four diodes by this diode set)	28480	5080-3866
A23CR26	1901-0948	8		DIODE-SWITCHING 30V 100MA	28480	1901-0948
A23CR27	1901-0948	8		DIODE-SWITCHING 30V 100MA	28480	1901-0948
A23CR28	1901-0948	8		DIODE-SWITCHING 30V 100MA	28480	1901-0948
A23CR29	1901-0948	8		DIODE-SWITCHING 30V 100MA	28480	1901-0948
A23CR30	1901-0948	8		DIODE-SWITCHING 30V 100MA	28480	1901-0948
A23CR31	1901-0948	8		DIODE-SWITCHING 30V 100MA	28480	1901-0948
A23CR32	1901-0948	8		DIODE-SWITCHING 30V 100MA	28480	1901-0948
A23CR33	1901-0948	8		DIODE-SWITCHING 30V 100MA	28480	1901-0948
A23CR34 A23CR37 A23CR38 A23CR41	5080-3866			MATCHED FOUR DIODE SET (when replacing one of CR34, CR37, CR38, and CR41, replace all of above four diodes by this diode set)	28480	5080-3866
A23CR35 A23CR36 A23CR39 A23CR40	5080-3866			MATCHED FOUR DIODE SET (when replacing one of CR35, CR36, CR39, and CR40, replace all of above four diodes by this diode set)	28480	5080-3866
A23L1	9100-2247	4	7	INDUCTOR RF-CH-MLD 100NH 10%	28480	9100-2247
A23L2	9100-2247	4		INDUCTOR RF-CH-MLD 100NH 10%	28480	9100-2247
A23L3	9140-1301	3	8	COIL-VAR 39NH-52NH Q=80 PC-MTG	S4218	E502AN-2000012
A23L4	9100-2247	4		INDUCTOR RF-CH-MLD 100NH 10%	28480	9100-2247
A23L5	9140-1301	3		COIL-VAR 39NH-52NH Q=80 PC-MTG	S4218	E502AN-2000012
A23L6	9100-2247	4		INDUCTOR RF-CH-MLD 100NH 10%	28480	9100-2247
A23L7	9140-1301	3		COIL-VAR 39NH-52NH Q=80 PC-MTG	S4218	E502AN-2000012
A23L8	9100-2247	4		INDUCTOR RF-CH-MLD 100NH 10%	28480	9100-2247
A23L9	9100-2247	4		INDUCTOR RF-CH-MLD 100NH 10%	28480	9100-2247
A23L10	9100-2247	4		INDUCTOR RF-CH-MLD 100NH 10%	28480	9100-2247
A23L11	9140-1301	3		COIL-VAR 39NH-52NH Q=80 PC-MTG	S4218	E502AN-2000012
A23L12	9100-2259	8	2	INDUCTOR RF-CH-MLD 1.5UH 10%	28480	9100-2259
A23L13	9100-0539	3	2	INDUCTOR (MISC ITEM)	28480	9100-0539
A23L14	04195-61551	2	2	CORE ASSEMBLY	28480	04195-61551
A23L15	9140-1301	3		COIL-VAR 39NH-52NH Q=80 PC-MTG	S4218	E502AN-2000012
A23L16	9140-1301	3		COIL-VAR 39NH-52NH Q=80 PC-MTG	S4218	E502AN-2000012
A23L17	9140-1301	3		COIL-VAR 39NH-52NH Q=80 PC-MTG	S4218	E502AN-2000012
A23L18	9140-1301	3		COIL-VAR 39NH-52NH Q=80 PC-MTG	S4218	E502AN-2000012
A23L19	04195-61551	2		CORE ASSEMBLY	28480	04195-61551
A23L20	9140-1298	7	2	COIL-VAR 93NH-145NH Q=75 PC-MTG	S4218	E502AN-500005
A23L21	9140-1299	8	2	COIL-VAR 109NH-181NH Q=70 PC-MTG	S4218	E502AN-6000016
A23L22	9140-1299	8		COIL-VAR 109NH-181NH Q=70 PC-MTG	S4218	E502AN-6000016
A23L23	9140-1298	7		COIL-VAR 93NH-145NH Q=75 PC-MTG	S4218	E502AN-500005
A23L24	9100-2259	8		INDUCTOR RF-CH-MLD 1.5UH 10%	28480	9100-2259
A23L25	9100-0539	3		INDUCTOR (MISC ITEM)	28480	9100-0539
A23Q1	1854-0810	2	1	TRANSISTOR NPN SI PD=625MW FT=200MHZ	28480	1854-0810
A23Q2	1853-0460	6	1	TRANSISTOR PNP SI PD=180MW FT=4GHZ	28480	1853-0460
A23Q3	1854-0632	6	1	TRANSISTOR NPN SI PD=180MW FT=4GHZ	25403	BFR91
A23Q4	1853-0459	3	1	TRANSISTOR PNP SI PD=625MW FT=200MHZ	28480	1853-0459

*** Indicates factory selected value.**

Table 2. A23 Replaceable Parts (4 of 5)

Reference Designator	HP Part Number	C D	Qty.	Description	Mfr Code	Mfr Part Number
A23R1	0757-0401	0	7	RESISTOR 100 1% .125W F TC=0+-100	24546	CT4-1/8-T0-101-F
A23R2	0757-0401	0		RESISTOR 100 1% .125W F TC=0+-100	24546	CT4-1/8-T0-101-F
A23R3	0698-3153	9	11	RESISTOR 3.83K 1% .125W F TC=0+-100	24546	CT4-1/8-T0-3831-F
A23R4	0698-3153	9		RESISTOR 3.83K 1% .125W F TC=0+-100	24546	CT4-1/8-T0-3831-F
A23R5	0698-3441	8	4	RESISTOR 215 1% .125W F TC=0+-100	24546	CT4-1/8-T0-215R-F
A23R6	0698-3432	7	2	RESISTOR 26.1 1% .125W F TC=0+-100	03888	PME55-1/8-T0-26R1-F
A23R7	0698-3441	8		RESISTOR 215 1% .125W F TC=0+-100	24546	CT4-1/8-T0-215R-F
A23R8	0757-0465	6	12	RESISTOR 100K 1% .125W F TC=0+-100	24546	CT4-1/8-T0-1003-F
A23R9	0757-0465	6		RESISTOR 100K 1% .125W F TC=0+-100	24546	CT4-1/8-T0-1003-F
A23R10	0757-0465	6		RESISTOR 100K 1% .125W F TC=0+-100	24546	CT4-1/8-T0-1003-F
A23R11	0757-0465	6		RESISTOR 100K 1% .125W F TC=0+-100	24546	CT4-1/8-T0-1003-F
A23R12	0698-3432	7		RESISTOR 26.1 1% .125W F TC=0+-100	03888	PME55-1/8-T0-26R1-F
A23R13	0698-3441	8		RESISTOR 215 1% .125W F TC=0+-100	24546	CT4-1/8-T0-215R-F
A23R14	0698-3441	8		RESISTOR 215 1% .125W F TC=0+-100	24546	CT4-1/8-T0-215R-F
A23R15	0698-3153	9		RESISTOR 3.83K 1% .125W F TC=0+-100	24546	CT4-1/8-T0-3831-F
A23R16	0757-0442	9	2	RESISTOR 10K 1% .125W F TC=0+-100	24546	CT4-1/8-T0-1002-F
A23R17	0757-0279	0	2	RESISTOR 3.16K 1% .125W F TC=0+-100	24546	CT4-1/8-T0-3161-F
A23R18	0757-0399	5	8	RESISTOR 82.5 1% .125W F TC=0+-100	24546	CT4-1/8-T0-82R5-F
A23R19	0757-0399	5		RESISTOR 82.5 1% .125W F TC=0+-100	24546	CT4-1/8-T0-82R5-F
A23R20	0698-7202	7	2	RESISTOR 38.3 1% .05W F TC=0+-100	24546	C3-1/8-T0-38R3-F
A23R21	0757-0346	2	4	RESISTOR 10 1% .125W F TC=0+-100	28480	0757-0346
A23R22	0698-3150	6	2	RESISTOR 2.37K 1% .125W F TC=0+-100	24546	CT4-1/8-T0-2371-F
A23R23	0757-0397	3	2	RESISTOR 68.1 1% .125W F TC=0+-100	24546	CT4-1/8-T0-68R1-F
A23R24	0757-0399	5		RESISTOR 82.5 1% .125W F TC=0+-100	24546	CT4-1/8-T0-82R5-F
A23R25	0757-0399	5		RESISTOR 82.5 1% .125W F TC=0+-100	24546	CT4-1/8-T0-82R5-F
A23R26	0757-0401	0		RESISTOR 100 1% .125W F TC=0+-100	24546	CT4-1/8-T0-101-F
A23R27	0757-0401	0		RESISTOR 100 1% .125W F TC=0+-100	24546	CT4-1/8-T0-101-F
A23R28	0698-3153	9		RESISTOR 3.83K 1% .125W F TC=0+-100	24546	CT4-1/8-T0-3831-F
A23R29	0698-3153	9		RESISTOR 3.83K 1% .125W F TC=0+-100	24546	CT4-1/8-T0-3831-F
A23R30	0698-3153	9		RESISTOR 3.83K 1% .125W F TC=0+-100	24546	CT4-1/8-T0-3831-F
A23R31	0698-3153	9		RESISTOR 3.83K 1% .125W F TC=0+-100	24546	CT4-1/8-T0-3831-F
A23R32	0757-0465	6		RESISTOR 100K 1% .125W F TC=0+-100	24546	CT4-1/8-T0-1003-F
A23R33	0757-0465	6		RESISTOR 100K 1% .125W F TC=0+-100	24546	CT4-1/8-T0-1003-F
A23R34	0757-0465	6		RESISTOR 100K 1% .125W F TC=0+-100	24546	CT4-1/8-T0-1003-F
A23R35	0757-0465	6		RESISTOR 100K 1% .125W F TC=0+-100	24546	CT4-1/8-T0-1003-F
A23R36	0698-3153	9		RESISTOR 3.83K 1% .125W F TC=0+-100	24546	CT4-1/8-T0-3831-F
A23R37	0698-3153	9		RESISTOR 3.83K 1% .125W F TC=0+-100	24546	CT4-1/8-T0-3831-F
A23R38	0698-3153	9		RESISTOR 3.83K 1% .125W F TC=0+-100	24546	CT4-1/8-T0-3831-F
A23R39	0698-3153	9		RESISTOR 3.83K 1% .125W F TC=0+-100	24546	CT4-1/8-T0-3831-F
A23R40	0757-0279	0		RESISTOR 3.16K 1% .125W F TC=0+-100	24546	CT4-1/8-T0-3161-F
A23R41	0757-0346	2		RESISTOR 10 1% .125W F TC=0+-100	28480	0757-0346
A23R42	0698-3440	7	1	RESISTOR 196 1% .125W F TC=0+-100	24546	CT4-1/8-T0-196R-F
A23R43	0757-0346	2		RESISTOR 10 1% .125W F TC=0+-100	28480	0757-0346
A23R44	0757-0399	5		RESISTOR 82.5 1% .125W F TC=0+-100	24546	CT4-1/8-T0-82R5-F
A23R45	0757-0399	5		RESISTOR 82.5 1% .125W F TC=0+-100	24546	CT4-1/8-T0-82R5-F
A23R46	0698-7202	7		RESISTOR 38.3 1% .05W F TC=0+-100	24546	C3-1/8-T0-38R3-F
A23R47	0757-0403	2	2	RESISTOR 121 1% .125W F TC=0+-100	24546	CT4-1/8-T0-121R-F
A23R48	0757-0403	2		RESISTOR 121 1% .125W F TC=0+-100	24546	CT4-1/8-T0-121R-F
A23R49	0757-0399	5		RESISTOR 82.5 1% .125W F TC=0+-100	24546	CT4-1/8-T0-82R5-F
A23R50	0757-0399	5		RESISTOR 82.5 1% .125W F TC=0+-100	24546	CT4-1/8-T0-82R5-F
A23R51	0757-0401	0		RESISTOR 100 1% .125W F TC=0+-100	24546	CT4-1/8-T0-101-F
A23R52	0757-0401	0		RESISTOR 100 1% .125W F TC=0+-100	24546	CT4-1/8-T0-101-F
A23R53	0757-0401	0		RESISTOR 100 1% .125W F TC=0+-100	24546	CT4-1/8-T0-101-F
A23R54	0757-0465	6		RESISTOR 100K 1% .125W F TC=0+-100	24546	CT4-1/8-T0-1003-F
A23R55	0757-0465	6		RESISTOR 100K 1% .125W F TC=0+-100	24546	CT4-1/8-T0-1003-F

*** Indicates factory selected value.**

Table 2. A23 Replaceable Parts (5 of 5)

Reference Designator	HP Part Number	C D	Qty.	Description	Mfr Code	Mfr Part Number
A23R56	0757-0465	6		RESISTOR 100K 1% .125W F TC=0+-100	24546	CT4-1/8-T0-1003-F
A23R57	0757-0465	6		RESISTOR 100K 1% .125W F TC=0+-100	24546	CT4-1/8-T0-1003-F
A23R58	0757-0442	9		RESISTOR 10K 1% .125W F TC=0+-100	24546	CT4-1/8-T0-1002-F
A23R59	0698-3150	6		RESISTOR 2.37K 1% .125W F TC=0+-100	24546	CT4-1/8-T0-2371-F
A23R60	0757-0397	3		RESISTOR 68.1 1% .125W F TC=0+-100	24546	CT4-1/8-T0-68R1-F
A23R61	0757-0346	2		RESISTOR 10 1% .125W F TC=0+-100	28480	0757-0346
A23U1	1826-0221	0	1	IC V RGLTR TO-220	04713	MC7912CT
A23U2	1826-0147	9	1	IC 7812 V RGLTR TO-220	04713	MC7812CP
A23W1	04195-61654	6	1	WIRE ASSEMBLY 12PIN	28480	04195-61654
	04195-00661		1	CASE SHIELD, COMPONENT SIDE		
	04195-00662		1	CASE SHIELD, COMPONENT SIDE		

*** Indicates factory selected value.**

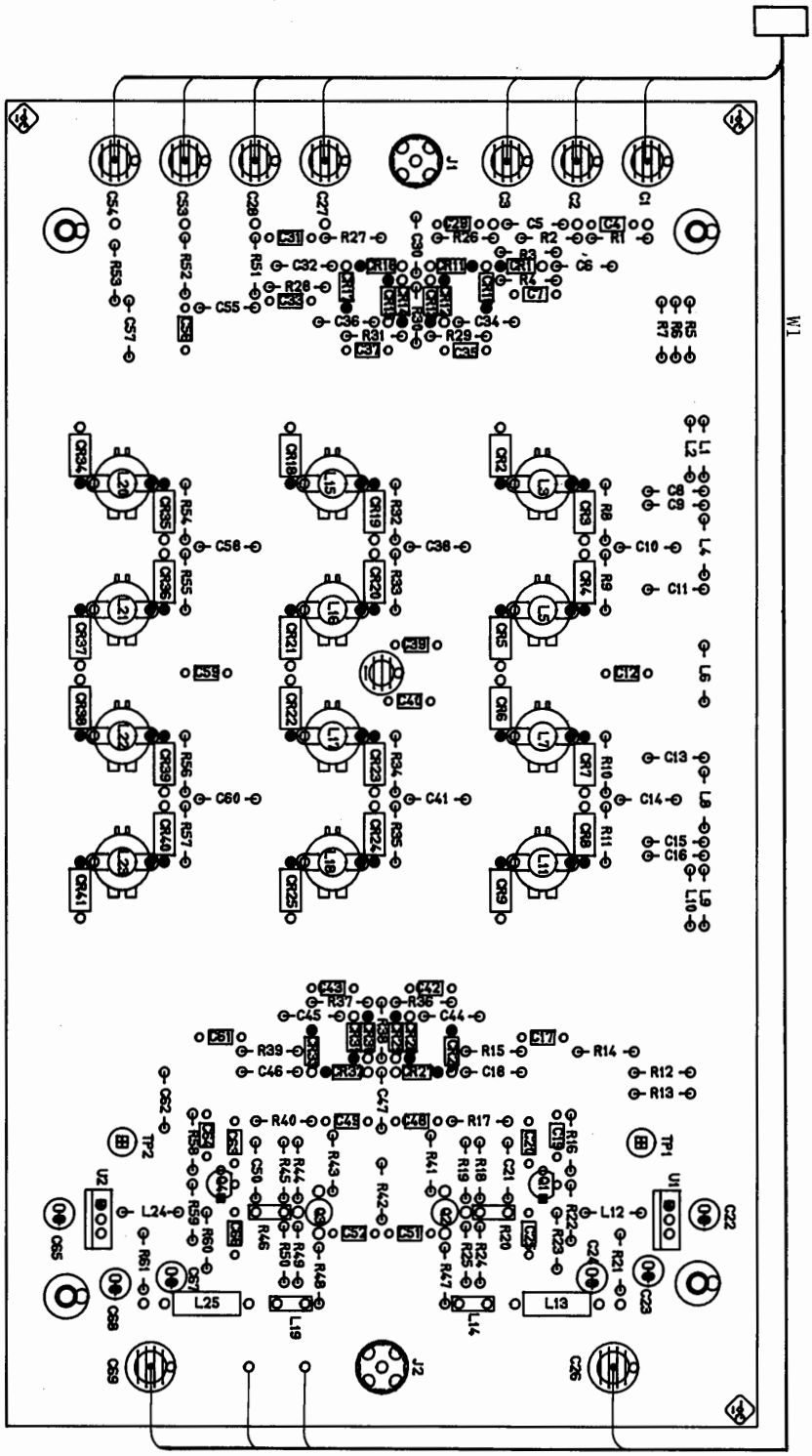

A23 Receiver Input Filter Component Locations

A23 RECEIVER INPUT FILTER

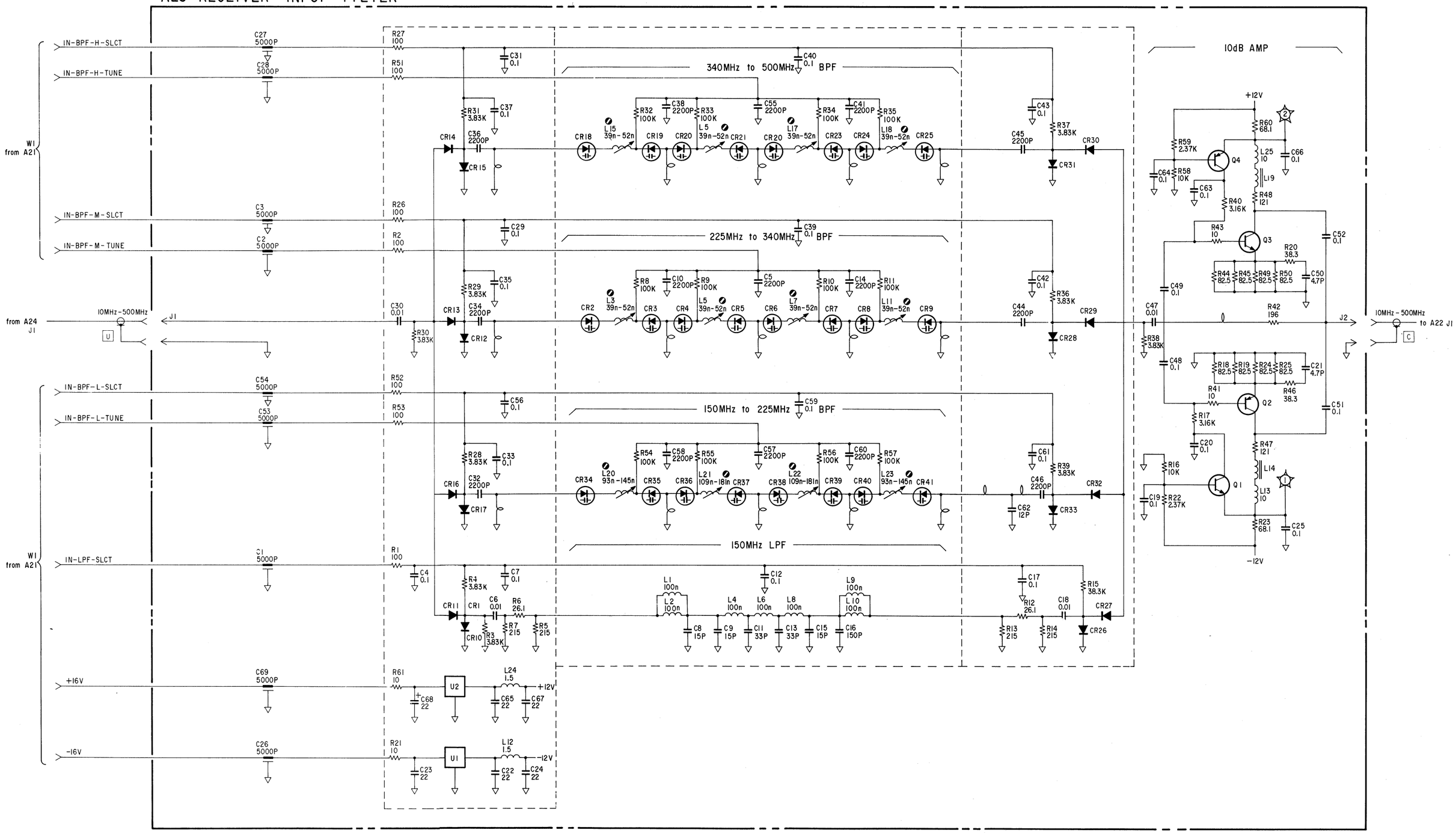

NOTES:

1. REFERENCE DESIGNATORS WITHIN THIS ASSEMBLY ARE ABBREVIATED. PREFIX ABBREVIATION WITH ASSEMBLY NUMBER FOR COMPLETE REFERENCE DESIGNATOR.

2. UNLESS OTHERWISE INDICATED:

   RESISTANCE IN OHMS (Ω)
   CAPACITANCE IN MICROFARADS (μF)
   INDUCTANCE IN MICROHENRIES (μH)

3. ADJUSTMENT NAMES

A23L3	225 MHz - 340 MHz BPF ADJ
A23L5	225 MHz - 340 MHz BPF ADJ
A23L7	225 MHz - 340 MHz BPF ADJ
A23L11	225 MHz - 340 MHz BPF ADJ
A23L15	340 MHz - 500 MHz BPF ADJ
A23L16	340 MHz - 500 MHz BPF ADJ
A23L17	340 MHz - 500 MHz BPF ADJ
A23L18	340 MHz - 500 MHz BPF ADJ
A23L20	150 MHz - 225 MHz BPF ADJ
A23L21	150 MHz - 225 MHz BPF ADJ
A23L22	150 MHz - 225 MHz BPF ADJ
A23L23	150 MHz - 225 MHz BPF ADJ

HIGH FREQUENCY MULTIPLEXER SERVICE SHEET

The A25 High Frequency Multiplexer board passes one of four input signals through input attenuator boards A27, A28, A29 and A30. The A24 High Frequency Multiplexer Buffer board amplifies the signal through the A25 board, and feeds it to the A23 Receiver Input Filter board. The A24 board also detects any overload condition caused by the input signal.

CIRCUIT DESCRIPTION:

The High Frequency Multiplexer section consists of the A25 multiplexer and the A24 multiplexer buffer boards. The A24 board consists of an input switch, a 9 dB amplifier, and a HF overload detector.

HIGH FREQUENCY MULTIPLEXER: (A25A1, A25A2, A25A3, A25A4)

The multiplexer is used to select one of four input signals which is fed to the input filter board. The signal routed through the multiplexer is selected by the IN-MPX-R1, IN-MPX-R2, IN-MPX-T1, and IN-MPX-T2 signals. For example, if the IN-MPX-R1 signal is high (approx. 10 V), the switch on A25A1 turns ON, and the signal from INPUT R1 passes through the input attenuator and is fed to the A24 board.

INPUT SWITCH: (CR1 to CR10)

The input switch passes the signal from the multiplexer. If the signal passes through A25A1, CR10 is turned ON by the applied dc offset voltage of the signal, and the signal passes through the input switch. C8 blocks dc offset level of the input signal through the multiplexer. The offset level at the input switch output will be approximately 0 V.

9 dB AMPLIFIER: (Q1 to Q4)

The 9 dB amplifier amplifies the signal through the multiplexer.

HF OVERLOAD DETECTOR: (U2, U4)

The HF overload detector monitors the output of the 9 dB amplifier and detects the overload condition of input signals > 10 MHz. The 9 dB amplifier output signal is amplified by U2 (gain is approx. 1.1), and rectified by CR12. Signal overload is detected by U4.

U4A outputs a voltage proportional to the rectified signal, and U4B compares the voltage difference between U4A's output level and the reference level defined by R48 or R49, and outputs a voltage proportional to the voltage difference. U4B's output level range is approximately -4 V to +12 V. When an overload is detected, U4B's output level is approximately +12 V. U4C converts U4B's output level to a TTL level. When an overload is detected, U4C's output voltage (the potential at CR11's cathode) is approximately -1.5 V (the normal level is approx. 2.5 V).

R48 is used to adjust the overload detection threshold level for the measurement configurations other than Spectrum. R49 is used to adjust the overload detection threshold level for the Spectrum configuration. When the Spectrum configuration is selected, Q5 is turned ON by the SPECT-MODE signal, and the overload detection threshold level is defined by R49.

TROUBLESHOOTING:

1. Input Switch Input/Output Waveform:

The following waveform will be displayed when the signal generator output is connected to the HP 4195A INPUT R1 connector.

Setting:

Oscilloscope:

CHAN 1:	100 mV/div
CHAN 2:	100 mV/div
TIME:	5 nsec/div
TRIGGER:	CHAN 2, -Slope
TRIGGER LEVEL:	0 V

HP 4194A:

CONFIG:	SPECTRUM
INPUT PORT:	R1

Signal Generator:

FREQUENCY:	100 MHz
AMPLITUDE:	0 dBm

GRAPH 1:
CR10 (CR9 side lead)
GRAPH 2:
CR5 (C8 side lead)

Waveform:

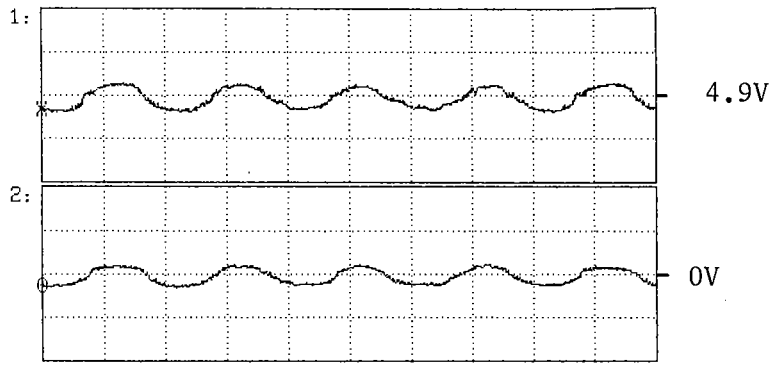

2. 9 dB Amplifier Input/Output Waveform:

The following waveforms will be displayed when the signal generator output is connected to the HP 4195A INPUT R1 connector.

Setting:

Oscilloscope:

CHAN 1:	100 mV/div
CHAN 2:	100 mV/div
TIME:	5 nsec/div
TRIGGER:	CHAN 2, -Slope
TRIGGER LEVEL:	0 V

HP 4194A:

CONFIG:	SPECTRUM
INPUT PORT:	R1

Signal Generator:

FREQUENCY:	100 MHz
AMPLITUDE:	0 dBm

GRAPH 1:
R13 (CR5 side lead)
GRAPH 2:
C5 (L2 side lead)

Waveform:

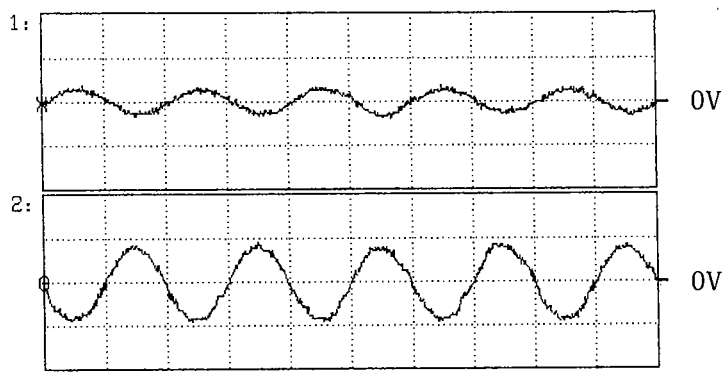

Table 1. A24 Replaceable Parts (1 of 3)

Reference Designator	HP Part Number	C D	Qty.	Description	Mfr Code	Mfr Part Number
A24				HIGH FREQUENCY MULTIPLEXER BUFFER		
A24	04195-66524	9	1	HF MUX BUF AMP'Y	28480	04195-66524
A24C1	0160-6561	0	14	CAPACITOR-FXD .1UF +-20% 50VDC CER	16299	CAC02Z5U104M050A
A24C2	0160-4790	3	1	CAPACITOR-FXD 12PF +-5% 100VDC CER 0+-30	28480	0160-4790
A24C3	0180-3363	6	8	CAPACITOR-FXD 22UF+-20% 25VDC AL	28480	0180-3363
A24C4	0160-6561	0		CAPACITOR-FXD .1UF +-20% 50VDC CER	16299	CAC02Z5U104M050A
A24C5	0160-6561	0		CAPACITOR-FXD .1UF +-20% 50VDC CER	16299	CAC02Z5U104M050A
A24C6	0160-6561	0		CAPACITOR-FXD .1UF +-20% 50VDC CER	16299	CAC02Z5U104M050A
A24C7	0160-6561	0		CAPACITOR-FXD .1UF +-20% 50VDC CER	16299	CAC02Z5U104M050A
A24C8	0160-4832	4	1	CAPACITOR-FXD .01UF +-10% 100VDC CER	28480	0160-4832
A24C9	0160-6561	0		CAPACITOR-FXD .1UF +-20% 50VDC CER	16299	CAC02Z5U104M050A
A24C10	0160-6561	0		CAPACITOR-FXD .1UF +-20% 50VDC CER	16299	CAC02Z5U104M050A
A24C11	0180-3363	6		CAPACITOR-FXD 22UF+-20% 25VDC AL	28480	0180-3363
A24C12	0160-6561	0		CAPACITOR-FXD .1UF +-20% 50VDC CER	16299	CAC02Z5U104M050A
A24C13	0160-6561	0		CAPACITOR-FXD .1UF +-20% 50VDC CER	16299	CAC02Z5U104M050A
A24C14	0160-4797	0	1	CAPACITOR-FXD 3.3PF +-.25PF 100VDC CER	28480	0160-4797
A24C15	0160-2437	1	4	CAPACITOR-FDTHRU 5000PF +80 -20% 200V	28480	0160-2437
	2580-0006	8	4	NUT-HEX	28480	2580-0006
	8150-3490	5	4	WIRE	28480	8150-3490
A24C16	0180-3363	6		CAPACITOR-FXD 22UF+-20% 25VDC AL	28480	0180-3363
A24C17	0180-3363	6		CAPACITOR-FXD 22UF+-20% 25VDC AL	28480	0180-3363
A24C18	0160-6561	0		CAPACITOR-FXD .1UF +-20% 50VDC CER	16299	CAC02Z5U104M050A
A24C19	0160-4814	2	2	CAPACITOR-FXD 150PF +-5% 100VDC CER	28480	0160-4814
A24C20	0160-4814	2		CAPACITOR-FXD 150PF +-5% 100VDC CER	28480	0160-4814
A24C21	0160-6561	0		CAPACITOR-FXD .1UF +-20% 50VDC CER	16299	CAC02Z5U104M050A
A24C22	0160-6561	0		CAPACITOR-FXD .1UF +-20% 50VDC CER	16299	CAC02Z5U104M050A
A24C23	0160-2437	1		CAPACITOR-FDTHRU 5000PF +80 -20% 200V	28480	0160-2437
	2580-0006	8		NUT-HEX	28480	2580-0006
	8150-3490	5		WIRE	28480	8150-3490
A24C24	0160-2437	1		CAPACITOR-FDTHRU 5000PF +80 -20% 200V	28480	0160-2437
	2580-0006	8		NUT-HEX	28480	2580-0006
	8150-3490	5		WIRE	28480	8150-3490
A24C25	0180-3363	6		CAPACITOR-FXD 22UF+-20% 25VDC AL	28480	0180-3363
A24C26	0180-3363	6		CAPACITOR-FXD 22UF+-20% 25VDC AL	28480	0180-3363
A24C27	0180-3363	6		CAPACITOR-FXD 22UF+-20% 25VDC AL	28480	0180-3363
A24C28	0180-3363	6		CAPACITOR-FXD 22UF+-20% 25VDC AL	28480	0180-3363
A24C29	0160-4791	4	1	CAPACITOR-FXD 10PF +-5% 100VDC CER 0+-30	28480	0160-4791
A24C30	0160-6561	0		CAPACITOR-FXD .1UF +-20% 50VDC CER	16299	CAC02Z5U104M050A
A24C31	0160-6561	0		CAPACITOR-FXD .1UF +-20% 50VDC CER	16299	CAC02Z5U104M050A
A24C32	0160-2437	1		CAPACITOR-FDTHRU 5000PF +80 -20% 200V	28480	0160-2437
	2580-0006	8		NUT-HEX	28480	2580-0006
	8150-3490	5		WIRE	28480	8150-3490
A24CR1	1901-0050	3	2	DIODE-SWITCHING 80V 200MA 2NS DO-35	9N171	1N4150
A24CR2	1901-0948	8	7	DIODE-SWITCHING 30V 100MA	28480	1901-0948
A24CR3	1901-0539	3	4	DIODE-SM SIG SCHOTTKY	28480	1901-0539
A24CR4	1901-0948	8		DIODE-SWITCHING 30V 100MA	28480	1901-0948
A24CR5	1901-0050	3		DIODE-SWITCHING 80V 200MA 2NS DO-35	9N171	1N4150
A24CR6	1901-0948	8		DIODE-SWITCHING 30V 100MA	28480	1901-0948
A24CR7	1901-0948	8		DIODE-SWITCHING 30V 100MA	28480	1901-0948
A24CR8	1901-0948	8		DIODE-SWITCHING 30V 100MA	28480	1901-0948
A24CR9	1901-0539	3		DIODE-SM SIG SCHOTTKY	28480	1901-0539
A24CR10	1901-0948	8		DIODE-SWITCHING 30V 100MA	28480	1901-0948
A24CR11	1901-0948	8		DIODE-SWITCHING 30V 100MA	28480	1901-0948
A24CR12	1901-0539	3		DIODE-SM SIG SCHOTTKY	28480	1901-0539
A24CR13	1901-0539	3		DIODE-SM SIG SCHOTTKY	28480	1901-0539

*** Indicates factory selected value.**

Table 1. A24 Replaceable Parts (2 of 3)

Reference Designator	HP Part Number	C D	Qty.	Description	Mfr Code	Mfr Part Number
A24J1	1250-0835	1	5	CONNECTOR-RF SMC M PC 50-OHM	28480	1250-0835
A24J2	1250-0835	1		CONNECTOR-RF SMC M PC 50-OHM	28480	1250-0835
A24J3	1250-0835	1		CONNECTOR-RF SMC M PC 50-OHM	28480	1250-0835
A24J4	1250-0835	1		CONNECTOR-RF SMC M PC 50-OHM	28480	1250-0835
A24J5	1250-0835	1		CONNECTOR-RF SMC M PC 50-OHM	28480	1250-0835
A24L1	9100-0539	3	2	INDUCTOR (MISC ITEM)	28480	9100-0539
A24L2	9100-2891	4	1	INDUCTOR RF-CH-MLD 50NH 10%	28480	9100-2891
A24L3	9100-0539	3		INDUCTOR (MISC ITEM)	28480	9100-0539
A24L4	9100-3552	6	2	INDUCTOR RF-CH-MLD 1.5UH 5%	28480	9100-3552
A24L5	9100-2251	0	1	INDUCTOR RF-CH-MLD 220NH 10%	28480	9100-2251
A24L6	9100-3552	6		INDUCTOR RF-CH-MLD 1.5UH 5%	28480	9100-3552
A24Q1	1854-0810	2	1	TRANSISTOR NPN SI PD=625MW FT=200MHZ	28480	1854-0810
A24Q2	1853-0460	6	1	TRANSISTOR PNP SI PD=180MW FT=4GHZ	28480	1853-0460
A24Q3	1853-0459	3	1	TRANSISTOR PNP SI PD=625MW FT=200MHZ	28480	1853-0459
A24Q4	1854-0632	6	1	TRANSISTOR NPN SI PD=180MW FT=4GHZ	25403	BFR91
A24Q5	1855-0609	9	1	TRANSISTOR J-FET N-CHAN TO-92 SI	28480	855-0609
A24R1	0683-0825	5	1	RESISTOR 8.2 5% .25W CF TC=0-400	01121	CB82G5
A24R2	0757-0418	9	2	RESISTOR 619 1% .125W F TC=0+-100	24546	CT4-1/8-T0-619R-F
A24R3	0757-0397	3	3	RESISTOR 68.1 1% .125W F TC=0+-100	24546	CT4-1/8-T0-68R1-F
A24R4	0698-0084	9	3	RESISTOR 2.15K 1% .125W F TC=0+-100	24546	CT4-1/8-T0-2151-F
A24R5	0757-0442	9	3	RESISTOR 10K 1% .125W F TC=0+-100	24546	CT4-1/8-T0-1002-F
A24R6	0757-0382	6	1	RESISTOR 16.2 1% .125W F TC=0+-100	19701	5033R-1/8-T0-16R2-F
A24R7	0698-3438	3	2	RESISTOR 147 1% .125W F TC=0+-100	24546	CT4-1/8-T0-147R-F
	9170-0029	3	2	CORE-SHIELDING BEAD	28480	9170-0029
A24R8	0698-7202	7	4	RESISTOR 38.3 1% .05W F TC=0+-100	24546	C3-1/8-T0-38R3-F
A24R9	0698-7196	8	2	RESISTOR 21.5 1% .05W F TC=0+-100	24546	C3-1/8-T0-21R5-F
A24R10				NOT ASSIGNED		
A24R11	0698-7188	8	2	RESISTOR 10 1% .05W F TC=0+-100	24546	C3-1/8-T0-10R-F
A24R12	0698-3152	8	2	RESISTOR 3.48K 1% .125W F TC=0+-100	24546	CT4-1/8-T0-3481-F
A24R13	0698-3439	4	1	RESISTOR 178 1% .125W F TC=0+-100	24546	CT4-1/8-T0-178R-F
A24R14	0757-0418	9		RESISTOR 619 1% .125W F TC=0+-100	24546	CT4-1/8-T0-619R-F
A24R15	0757-0397	3		RESISTOR 68.1 1% .125W F TC=0+-100	24546	CT4-1/8-T0-68R1-F
A24R16	0698-0084	9		RESISTOR 2.15K 1% .125W F TC=0+-100	24546	CT4-1/8-T0-2151-F
A24R17	0757-0442	9		RESISTOR 10K 1% .125W F TC=0+-100	24546	CT4-1/8-T0-1002-F
A24R18	0698-3437	2	1	RESISTOR 133 1% .125W F TC=0+-100	24546	CT4-1/8-T0-133R-F
A24R19	0698-3438	3		RESISTOR 147 1% .125W F TC=0+-100	24546	CT4-1/8-T0-147R-F
	9170-0029	3		CORE-SHIELDING BEAD	28480	9170-0029
A24R20	0698-7202	7		RESISTOR 38.3 1% .05W F TC=0+-100	24546	C3-1/8-T0-38R3-F
A24R21	0698-7196	8		RESISTOR 21.5 1% .05W F TC=0+-100	24546	C3-1/8-T0-21R5-F
A24R22	0698-7188	8		RESISTOR 10 1% .05W F TC=0+-100	24546	C3-1/8-T0-10R-F
A24R23				NOT ASSIGNED		
A24R24	0698-3152	8		RESISTOR 3.48K 1% .125W F TC=0+-100	24546	CT4-1/8-T0-3481-F
A24R25	0683-0475	1	1	RESISTOR 4.7 5% .25W CF TC=0-400	01121	CB47G5
A24R26	0698-3155	1		RESISTOR 4.64K 1% .125W F TC=0+-100	24546	CT4-1/8-T0-4641-F
A24R27	0757-0346	2	4	RESISTOR 10 1% .125W F TC=0+-100	28480	0757-0346
A24R28	0757-0346	2		RESISTOR 10 1% .125W F TC=0+-100	28480	0757-0346
A24R29	0757-0397	3		RESISTOR 68.1 1% .125W F TC=0+-100	24546	CT4-1/8-T0-68R1-F
A24R30	0757-0467	8	1	RESISTOR 121K 1% .125W F TC=0+-100	24546	CT4-1/8-T0-1213-F
A24R31	0698-8827	4	3	RESISTOR 1M 1% .125W F TC=0+-100	28480	0698-8827
A24R32	0698-0084	9		RESISTOR 2.15K 1% .125W F TC=0+-100	24546	CT4-1/8-T0-2151-F
A24R33	0698-3159	5	1	RESISTOR 26.1K 1% .125W F TC=0+-100	24546	CT4-1/8-T0-2612-F
A24R34	0698-3155	1		RESISTOR 4.64K 1% .125W F TC=0+-100	24546	CT4-1/8-T0-4641-F
A24R35	0757-1094	9	1	RESISTOR 1.47K 1% .125W F TC=0+-100	24546	CT4-1/8-T0-1471-F

*** Indicates factory selected value.**

Table 1. A24 Replaceable Parts (3 of 3)

Reference Designator	HP Part Number	C D	Qty.	Description	Mfr Code	Mfr Part Number
A24R36	0698-8827	4		RESISTOR 1M 1% .125W F TC=0+-100	28480	0698-8827
A24R37	0757-0346	2		RESISTOR 10 1% .125W F TC=0+-100	28480	0757-0346
A24R38	0757-0346	2		RESISTOR 10 1% .125W F TC=0+-100	28480	0757-0346
A24R39	0757-0394	0	1	RESISTOR 51.1 1% .125W F TC=0+-100	24546	CT4-1/8-T0-51R1-F
A24R40	0698-3132	4	1	RESISTOR 261 1% .125W F TC=0+-100	24546	CT4-1/8-T0-2610-F
A24R41	0698-3459	8	1	RESISTOR 383K 1% .125W F TC=0+-100	28480	0698-3459
A24R42	0757-0442	9		RESISTOR 10K 1% .125W F TC=0+-100	24546	CT4-1/8-T0-1002-F
A24R43	0698-3446	3	1	RESISTOR 383 1% .125W F TC=0+-100	28480	0698-3446
A24R44	0757-0442	9	1	RESISTOR 10K 1% .125W F TC=0+-100	24546	CT4-1/8-T0-1002-F
A24R45	0757-0465	6	2	RESISTOR 100K 1% .125W F TC=0+-100	24546	CT4-1/8-T0-1003-F
A24R46	0757-0465	6		RESISTOR 100K 1% .125W F TC=0+-100	24546	CT4-1/8-T0-1003-F
A24R47	0698-8827	4		RESISTOR 1M 1% .125W F TC=0+-100	28480	0698-8827
A24R48	2100-0588	9	2	RESISTOR-TRMR 20K 10%		
A24R49	2100-0588	9		RESISTOR-TRMR 20K 10%		
A24U1	1826-0147	9	1	IC 7812 V RGLTR TO-220	04713	MC7812CP
A24U2	1826-1311	1	1	IC RF/IF AMPL WB 4-DIP-P PKG	28480	1826-1311
A24U3	1826-0221	0	1	IC V RGLTR TO-220	01295	TL074CN
A24U4	1826-0522	4	1	IC OP AMP LOW-BIAS-H-IMPD QUAD 14-DIP-P	01295	TL074CN
A24W1	04195-61655	7	1	WIRE ASSEMBLY 6PIN	28480	04195-61655
	04195-00710		1	CASE SHIELD, COMPONENT SIDE		
	04195-00655		1	CASE SHIELD, CIRCUIT SIDE		

*** Indicates factory selected value.**

Table 2. A25 Replaceable Parts (1 of 2)

Reference Designator	HP Part Number	C D	Qty.	Description	Mfr Code	Mfr Part Number
A25				HIGH FREQUENCY MULTIPLEXER		
A25A1 A25A1	04195-66525	0	4	R1 INPUT HIGH FREQUENCY SWITCH HF MUX BD ASSY	28480	04194-66525
A25A2 A25A2	04195-66525	0		T1 INPUT HIGH FREQUENCY SWITCH HF MUX BD ASSY	28480	04194-66525
A25A3 A25A3	04195-66525	0		T2 INPUT HIGH FREQUENCY SWITCH HF MUX BD ASSY	28480	04194-66525
A25A4 A25A4	04195-66525	0		R2 INPUT HIGH FREQUENCY SWITCH HF MUX BD ASSY	28480	04194-66525

*** Indicates factory selected value.**

Table 2. A25 Replaceable Parts (2 of 2)

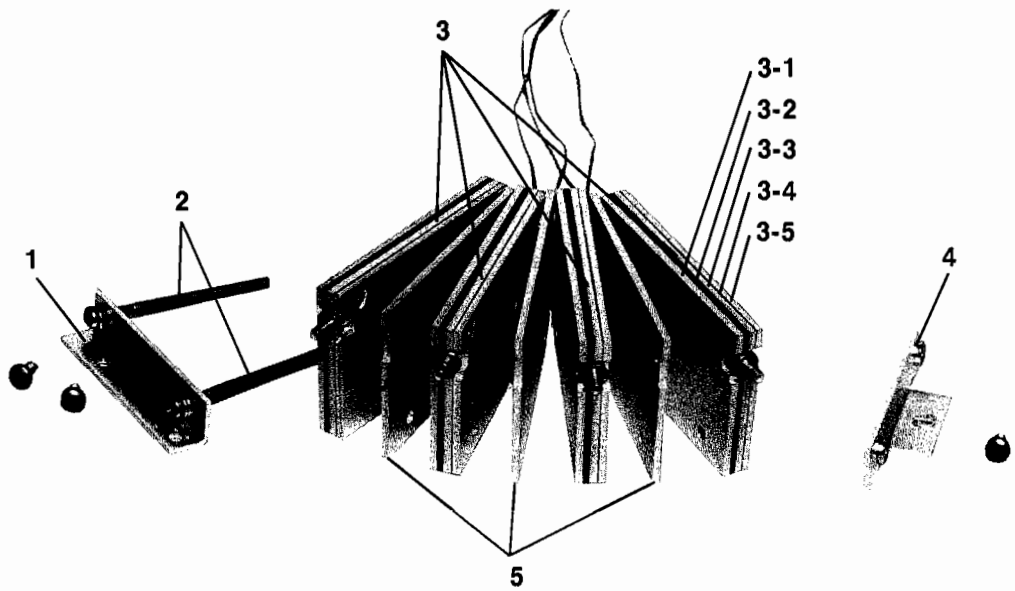

Reference Designator	HP Part Number	Qty.	Description
1	04195-01250	1	Angle
	0515-0885	2	Screw Pan-Head
2	0515-0903	2	Screw Pan-Head
	2190-0586	2	Washer
3-1	04195-00688	4	Plate Shield
3-2	04195-66525	4	HF MUX BD ASSY
3-3	04195-00684	4	Plate Shield
3-4	04195-00687	4	Plate Shield Permalloy
3-5	04195-00685	4	Plate Shield
	0515-0907	12	Screw Flat-Head
4	04195-01251	1	Angle
	0515-0885	3	Screw
5	04195-00686	3	Plate Shield

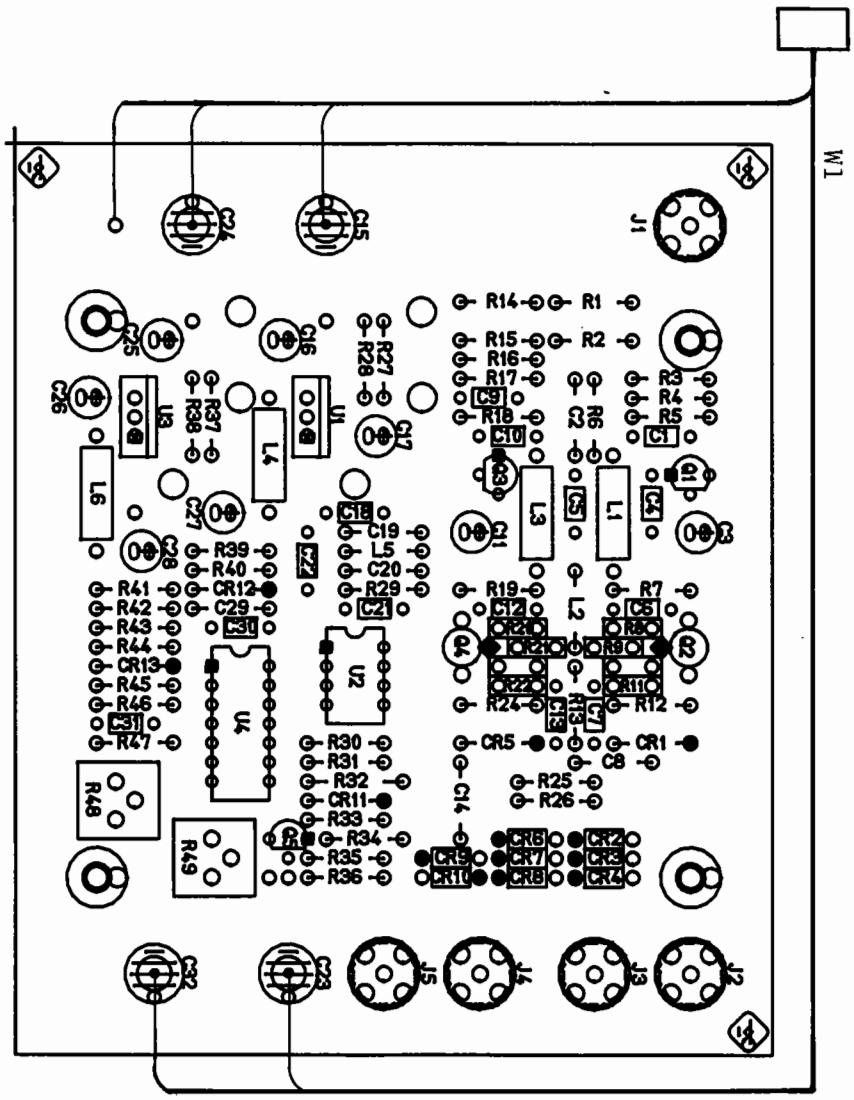

A24 High Frequency Multiplexer Component Locations

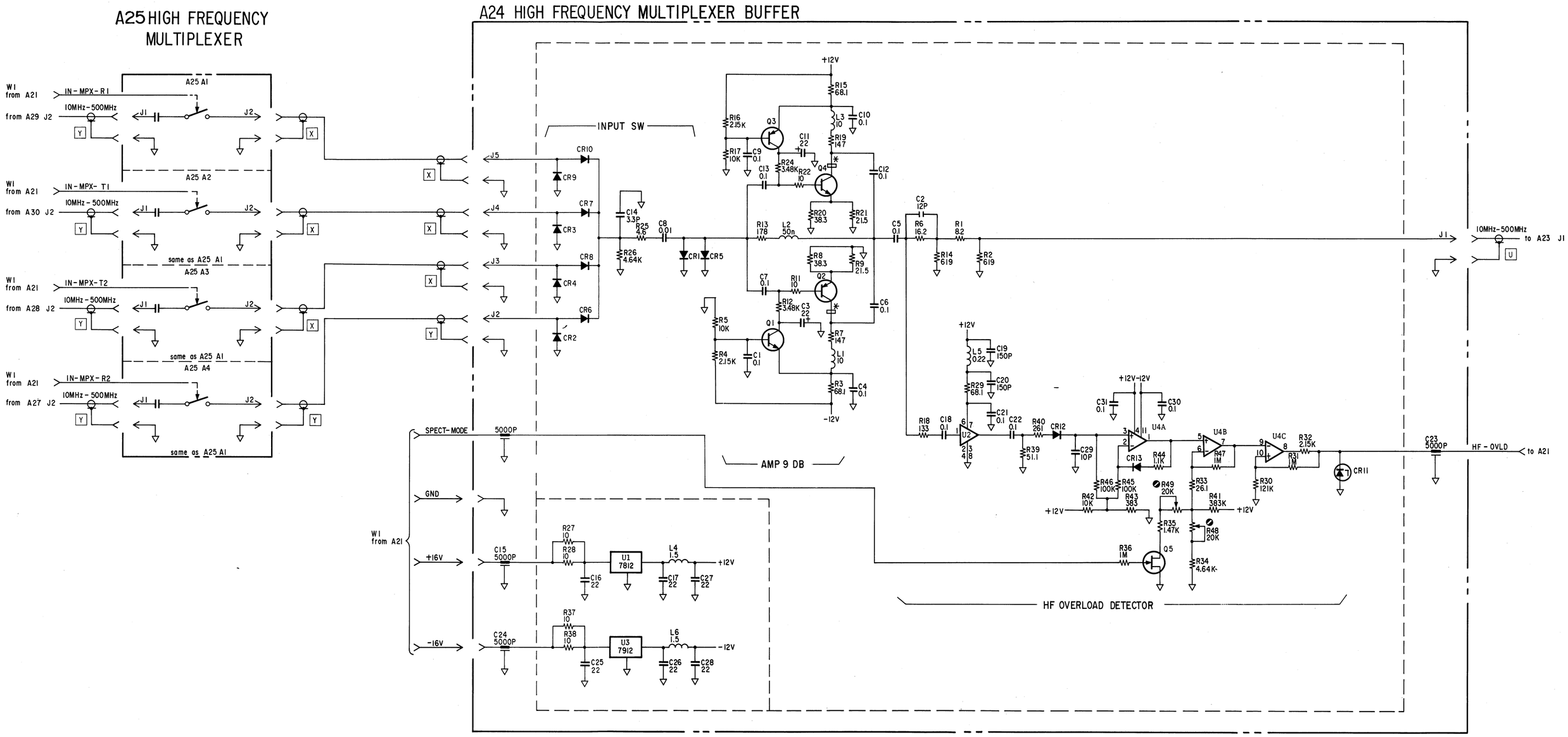
A25 HIGH FREQUENCY MULTIPLEXER
A24 HIGH FREQUENCY MULTIPLEXER BUFFER
W1 from A21
IN-MPX-R1
10MHz-500MHz
from A29 J2
A25 A1
A25 A2
IN-MPX-T1
from A30 J2
same as A25 A1
A25 A3
IN-MPX-T2
from A28 J2
A25 A4
IN-MPX-R2
from A27 J2
same as A25 A1
INPUT SW
AMP 9 DB
HF OVERLOAD DETECTOR
SPECT-MODE
GND
+16V
-16V
U1 7812
U3 7912
U2
U4A
U4B
U4C
Q1
Q2
Q3
Q4
Q5
10MHz-500MHz to A23 J1
HF-OVLD
to A21

NOTES:

1. REFERENCE DESIGNATORS WITHIN THIS ASSEMBLY ARE ABBREVIATED. PREFIX ABBREVIATION WITH ASSEMBLY NUMBER FOR COMPLETE REFERENCE DESIGNATOR.

2. UNLESS OTHERWISE INDICATED:

   RESISTANCE IN OHMS (Ω)
   CAPACITANCE IN MICROFARADS (μF)
   INDUCTANCE IN MICROHENRIES (μH)

3. ADJUSTMENT NAMES

A24R48	OVERLOAD ADJ1
A24R49	OVERLOAD ADJ2

LOW FREQUENCY MULTIPLEXER SERVICE SHEET

The A26 Low Frequency Multiplexer board passes one of four input signals from the A27, A28, A29, and A30 input attenuator boards, and applies it to the IF converter. The A26 board also detects overload conditions on the inputs.

CIRCUIT DESCRIPTION:

The A26 Low Frequency Multiplexer board consists of five 50 MHz lowpass filters, a multiplexer, a 6 dB amplifier, and a LF overload detector.

50 MHz LOWPASS FILTER:

Five 50 MHz LPFs are included on the A26 board. The four lowpass filters in front of the multiplexer are used to filter out the high frequency components included in the input attenuator output signal which are less than approximately 10 MHz. The lowpass filter located on the output of the A26 board is used to filter out the frequency components included in the 6 dB amplifier output signal.

MULTIPLEXER: (Q1, Q2, Q6 to Q9, Q12 to Q15, Q17, Q18)

The multiplexer is used to select one of four input signals to feed the IF converter. The signal through the multiplexer is selected by the IN-MPX-R1, IN-MPX-R2, IN-MPX-T1, and IN-MPX-T2 control signals.

Two FETs and a switching transistor are included in each input path of the multiplexer. The FETs are turned ON to pass the signal when the control signal is high (approx. 10 V). A switching transistor is used to ac ground the input signal when a signal path through the multiplexer is unselected. A capacitor in series with the transistor collector is used to prevent the multiplexer's input impedance from changing with the switching of FETs.

When the one control signal is HIGH, the other control signals are held LOW. The transistors are controlled as listed in Table 1.

Table 1. Multiplexer Operation

Control Signal	Transistors (ON)		Connector for Input Signal
	FET	Bipolar	
IN-MPX-R1	Q15, Q18	Q1, Q6, Q12	INPUT R1
IN-MPX-R2	Q2, Q9	Q6, Q12, Q17	INPUT R2
IN-MPX-T1	Q13, Q14	Q1, Q6, Q17	INPUT T1
IN-MPX-T2	Q7, Q8	Q1, Q12, Q17	INPUT T2

6 dB AMPLIFIER: (Q3 to Q5, Q10, Q11)

The 6 dB amplifier amplifies the signal as it passes through the multiplexer.

LF OVERLOAD DETECTOR: (CR17, CR25, CR19, CR20, CR26, U2, U4)

The LF overload detector monitors the output of the 6 dB amplifier and detects overloads caused by the input signal. The 6 dB amplifier output signal is amplified by U2 to provide two signals for full wave rectification . The amplitude of U2's differential outputs is approximately 5 times the signal output of the 6 dB amplifier, and they have the different dc offset levels. The phase difference between U2's differential outputs is 180°. CR25 and CR26 rectify U2's outputs. U4 compares the rectified signal levels to a reference level set by the adjustment of R78 or R66, LF-OVLD is output if the rectified signal level is > reference level.

R78 is used to adjust the overload threshold detection level for the measurement configurations other than Spectrum. R66 is used to adjust the overload threshold detection level for the Spectrum configuration. When the Spectrum configuration is selected, Q16 is turned ON by the SPECT-MODE signal.

TROUBLESHOOTING GUIDE:

1. 6 dB Amplifier Input/Output Waveform:

The following waveforms will be displayed when the signal generator output is connected to the HP 4195A INPUT R1 connector.

Setting:

Oscilloscope:

CHAN 1:	100 mV/div
CHAN 2:	100 mV/div
TIME:	100 nsec/div
TRIGGER:	CHAN 2, -Slope
TRIGGER LEVEL:	0 V

HP 4195A:

CONFIG:	SPECTRUM
INPUT PORT:	R1

Signal Generator:

OUTPUT FREQUENCY:	5 MHz
OUTPUT LEVEL:	0 dBm

GRAPH 1:
Q10 base
GRAPH 2:
C13 + side lead

Waveform:

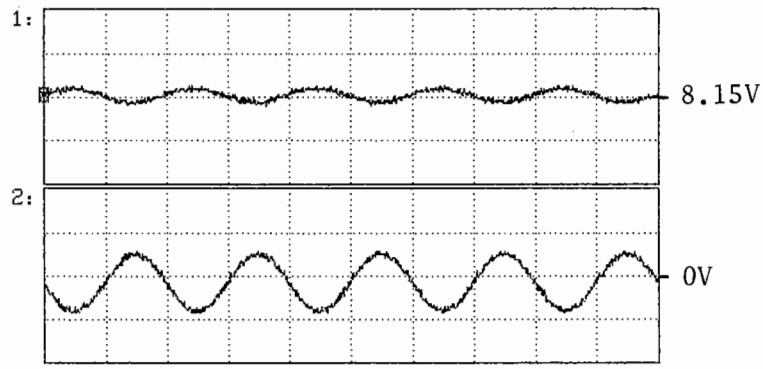

2. U2 Outputs Waveform:

The following waveforms will be displayed when the signal generator output is connected to the HP 4195A INPUT R1 connector.

Setting:

Oscilloscope:

CHAN 1:	200 mV/div
CHAN 2,3,4:	400 mV/div
TIME:	100 nsec/div
TRIGGER:	CHAN 1, -Slope
TRIGGER LEVEL:	0 V

HP 4195A:

CONFIG:	SPECTRUM
INPUT PORT:	R1

Signal Generator:

OUTPUT FREQUENCY:	5 MHz
OUTPUT LEVEL:	0 dBm

GRAPH 1:
U2 pin 14 (U2 input)
GRAPH 2:
U2 pin 7 (U2 output)
GRAPH 3:
U2 pin 8 (U2 output)
GRAPH 4:
U4 pin 2 (U4 input)

Waveform:

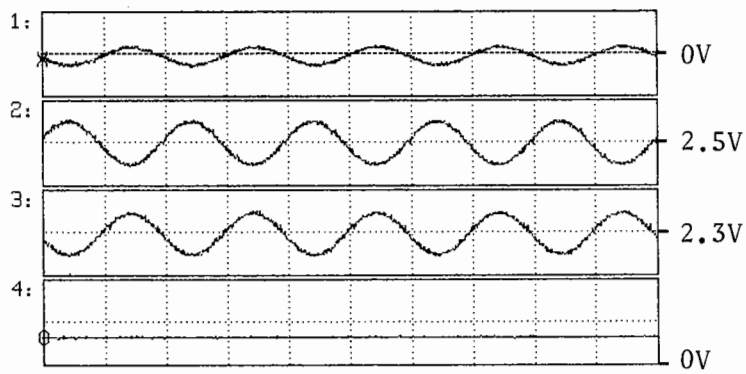

Table 2. A26 Replaceable Parts (1 of 5)

Reference Designator	HP Part Number	C D	Qty.	Description	Mfr Code	Mfr Part Number
A26				LOW FREQUENCY MULTIPLEXER		
A26	04195-66526	1	1	LF MUX BD ASSY	28480	04195-66526
A26C1	0160-4805	1	9	CAPACITOR-FXD 47PF +-5% 100VDC CER 0+-30	28480	0160-4805
A26C2	0160-4807	3	4	CAPACITOR-FXD 33PF +-5% 100VDC CER 0+-30	28480	0160-4807
A26C3	0160-4805	1		CAPACITOR-FXD 47PF +-5% 100VDC CER 0+-30	28480	0160-4805
A26C4	0160-6561	0	13	CAPACITOR-FXD .1UF +-20% 50VDC CER	16299	CAC02Z5U104M050A
A26C5	0180-3471	7	3	CAPACITOR-FXD 470UF+-20% 25VDC AL	28480	0180-3471
A26C6	0180-3471	7		CAPACITOR-FXD 470UF+-20% 25VDC AL	28480	0180-3471
A26C7	0160-6561	0		CAPACITOR-FXD .1UF +-20% 50VDC CER	16299	CAC02Z5U104M050A
A26C8	0180-3469	3	9	CAPACITOR-FXD 100UF+-20% 25VDC AL	28480	0180-3469
A26C9	0180-3363	6	5	CAPACITOR-FXD 22UF+-20% 25VDC AL	28480	0180-3363
A26C10	0180-3469	3		CAPACITOR-FXD 100UF+-20% 25VDC AL	28480	0180-3469
A26C11	0180-3363	6		CAPACITOR-FXD 22UF+-20% 25VDC AL	28480	0180-3363
A26C12	0180-3469	3		CAPACITOR-FXD 100UF+-20% 25VDC AL	28480	0180-3469
A26C13	0180-3471	7		CAPACITOR-FXD 470UF+-20% 25VDC AL	28480	0180-3471
A26C14	0160-4801	7	1	CAPACITOR-FXD 100PF +-5% 100VDC CER	28480	0160-4801
A26C15	0160-4787	8	1	CAPACITOR-FXD 22PF +-5% 100VDC CER 0+-30	28480	0160-4787
A26C16	0160-4805	1		CAPACITOR-FXD 47PF +-5% 100VDC CER 0+-30	28480	0160-4805
A26C17	0160-4786	7	1	CAPACITOR-FXD 27PF +-5% 100VDC CER 0+-30	28480	0160-4786
A26C18	0160-6561	0		CAPACITOR-FXD .1UF +-20% 50VDC CER	16299	CAC02Z5U104M050A
A26C19	0160-6561	0		CAPACITOR-FXD .1UF +-20% 50VDC CER	16299	CAC02Z5U104M050A
A26C20	0160-2437	1	6	CAPACITOR-FDTHRU 5000PF +80 -20% 200V	28480	0160-2437
	2580-0006	8	6	NUT-HEX	28480	2580-0006
	9170-1397	0	2	BEAD INDUCTOR	28480	9170-1397
A26C21	0160-2437	1		CAPACITOR-FDTHRU 5000PF +80 -20% 200V	28480	0160-2437
	2580-0006	8		NUT-HEX	28480	2580-0006
	9170-1397	0		BEAD INDUCTOR	28480	9170-1397
A26C22	0180-3469	3		CAPACITOR-FXD 100UF+-20% 25VDC AL	28480	0180-3469
A26C23	0180-3469	3		CAPACITOR-FXD 100UF+-20% 25VDC AL	28480	0180-3469
A26C24	0180-3469	3		CAPACITOR-FXD 100UF+-20% 25VDC AL	28480	0180-3469
A26C25	0160-4805	1		CAPACITOR-FXD 47PF +-5% 100VDC CER 0+-30	28480	0160-4805
A26C26	0160-4807	3		CAPACITOR-FXD 33PF +-5% 100VDC CER 0+-30	28480	0160-4807
A26C27	0160-4805	1		CAPACITOR-FXD 47PF +-5% 100VDC CER 0+-30	28480	0160-4805
A26C28	0160-6561	0		CAPACITOR-FXD .1UF +-20% 50VDC CER	16299	CAC02Z5U104M050A
A26C29	0180-3597	8	2	CAPACITOR-FXD 47UF+-20% 25VDC AL	28480	0180-3597
A26C30	0180-3597	8		CAPACITOR-FXD 47UF+-20% 25VDC AL	28480	0180-3597
A26C31	0180-3363	6		CAPACITOR-FXD 22UF+-20% 25VDC AL	28480	0180-3363
A26C32	0160-2437	1		CAPACITOR-FDTHRU 5000PF +80 -20% 200V	28480	0160-2437
	2580-0006	8		NUT-HEX	28480	2580-0006
	8150-3490	5	4	WIRE	28480	8150-3490
A26C33	0160-4805	1		CAPACITOR-FXD 47PF +-5% 100VDC CER 0+-30	28480	0160-4805
A26C34	0160-4807	3		CAPACITOR-FXD 33PF +-5% 100VDC CER 0+-30	28480	0160-4807
A26C35	0160-4805	1		CAPACITOR-FXD 47PF +-5% 100VDC CER 0+-30	28480	0160-4805
A26C36	0160-6561	0		CAPACITOR-FXD .1UF +-20% 50VDC CER	16299	CAC02Z5U104M050A
A26C37	0180-3363	6		CAPACITOR-FXD 22UF+-20% 25VDC AL	28480	0180-3363
A26C38	0160-3901	6	2	CAPACITOR-FXD 2.2UF +-20% 25VDC CER	28480	0160-3901
A26C39	0160-3901	6		CAPACITOR-FXD 2.2UF +-20% 25VDC CER	28480	0160-3901
A26C40	0160-6561	0		CAPACITOR-FXD .1UF +-20% 50VDC CER	16299	CAC02Z5U104M050A
A26C41	0160-6561	0		CAPACITOR-FXD .1UF +-20% 50VDC CER	16299	CAC02Z5U104M050A
A26C42	0180-3469	3		CAPACITOR-FXD 100UF+-20% 25VDC AL	28480	0180-3469
A26C43	0180-3469	3		CAPACITOR-FXD 100UF+-20% 25VDC AL	28480	0180-3469
A26C44	0160-6561	0		CAPACITOR-FXD .1UF +-20% 50VDC CER	16299	CAC02Z5U104M050A
A26C45	0160-6561	0		CAPACITOR-FXD .1UF +-20% 50VDC CER	16299	CAC02Z5U104M050A

*** Indicates factory selected value.**

Table 2. A26 Replaceable Parts (2 of 5)

Reference Designator	HP Part Number	C D	Qty.	Description	Mfr Code	Mfr Part Number
A26C46	0180-3363	6		CAPACITOR-FXD 22UF+-20% 25VDC AL	28480	0180-3363
A26C47	0160-2437	1		CAPACITOR-FDTHRU 5000PF +80 -20% 200V	28480	0160-2437
	2580-0006	8		NUT-HEX	28480	2580-0006
	8150-3490	5		WIRE	28480	8150-3490
A26C48	0160-2437	1		CAPACITOR-FDTHRU 5000PF +80 -20% 200V	28480	0160-2437
	2580-0006	8		NUT-HEX	28480	2580-0006
	8150-3490	5		WIRE	28480	8150-3490
A26C49	0180-3469	3		CAPACITOR-FXD 100UF+-20% 25VDC AL	28480	0180-3469
A26C50	0160-4805	1		CAPACITOR-FXD 47PF +-5% 100VDC CER 0+-30	28480	0160-4805
A26C51	0160-4807	3		CAPACITOR-FXD 33PF +-5% 100VDC CER 0+-30	28480	0160-4807
A26C52	0160-4805	1		CAPACITOR-FXD 47PF +-5% 100VDC CER 0+-30	28480	0160-4805
A26C53	0160-6561	0		CAPACITOR-FXD .1UF +-20% 50VDC CER	16299	CAC02Z5U104M050A
A26C54	0160-4830	2	1	CAPACITOR-FXD 2200PF +-10% 100VDC CER	28480	0160-4830
A26C55	0160-6561	0		CAPACITOR-FXD .1UF +-20% 50VDC CER	16299	CAC02Z5U104M050A
A26C56	0160-6561	0		CAPACITOR-FXD .1UF +-20% 50VDC CER	16299	CAC02Z5U104M050A
A26C57	0160-2437	1		CAPACITOR-FDTHRU 5000PF +80 -20% 200V	28480	0160-2437
	2580-0006	8		NUT-HEX	28480	2580-0006
	8150-3490	5		WIRE	28480	8150-3490
A26CR1	1901-0050	3	16	DIODE-SWITCHING 80V 200MA 2NS DO-35	9N171	1N4150
A26CR2	1901-0948	8	4	DIODE-SWITCHING 30V 100MA	28480	1901-0948
A26CR3	1902-0951	5	4	DIODE-ZNR 5.1V 5% DO-35 PD=.4W TC=+.035%	28480	1902-0951
A26CR4	1901-0050	3		DIODE-SWITCHING 80V 200MA 2NS DO-35	9N171	1N4150
A26CR5	1901-0050	3		DIODE-SWITCHING 80V 200MA 2NS DO-35	9N171	1N4150
A26CR6	1901-0050	3		DIODE-SWITCHING 80V 200MA 2NS DO-35	9N171	1N4150
A26CR7	1901-0050	3		DIODE-SWITCHING 80V 200MA 2NS DO-35	9N171	1N4150
A26CR8	1901-0948	8		DIODE-SWITCHING 30V 100MA	28480	1901-0948
A26CR9	1902-0951	5		DIODE-ZNR 5.1V 5% DO-35 PD=.4W TC=+.035%	28480	1902-0951
A26CR10	1901-0050	3		DIODE-SWITCHING 80V 200MA 2NS DO-35	9N171	1N4150
A26CR11	1901-0050	3		DIODE-SWITCHING 80V 200MA 2NS DO-35	9N171	1N4150
A26CR12	1901-0050	3		DIODE-SWITCHING 80V 200MA 2NS DO-35	9N171	1N4150
A26CR13	1901-0050	3		DIODE-SWITCHING 80V 200MA 2NS DO-35	9N171	1N4150
A26CR14	1901-0948	8		DIODE-SWITCHING 30V 100MA	28480	1901-0948
A26CR15	1902-0951	5		DIODE-ZNR 5.1V 5% DO-35 PD=.4W TC=+.035%	28480	1902-0951
A26CR16	1901-0050	3		DIODE-SWITCHING 80V 200MA 2NS DO-35	9N171	1N4150
A26CR17	1901-0050	3		DIODE-SWITCHING 80V 200MA 2NS DO-35	9N171	1N4150
A26CR18	1901-0050	3		DIODE-SWITCHING 80V 200MA 2NS DO-35	9N171	1N4150
A26CR19	1902-0953	7	2	DIODE-ZNR 6.2V 5% DO-35 PD=.4W TC=+.053%	28480	1902-0953
A26CR20	1902-0953	7		DIODE-ZNR 6.2V 5% DO-35 PD=.4W TC=+.053%	28480	1902-0953
A26CR21	1901-0050	3		DIODE-SWITCHING 80V 200MA 2NS DO-35	9N171	1N4150
A26CR22	1901-0948	8		DIODE-SWITCHING 30V 100MA	28480	1901-0948
A26CR23	1902-0951	5		DIODE-ZNR 5.1V 5% DO-35 PD=.4W TC=+.035%	28480	1902-0951
A26CR24	1901-0050	3		DIODE-SWITCHING 80V 200MA 2NS DO-35	9N171	1N4150
A26CR25	1901-0050	3		DIODE-SWITCHING 80V 200MA 2NS DO-35	9N171	1N4150
A26CR26	1901-0050	3		DIODE-SWITCHING 80V 200MA 2NS DO-35	9N171	1N4150
A26CR27	1902-0950	4	1	DIODE-ZNR 4.7V 5% DO-35 PD=.4W TC=+.025%	28480	1902-0950
A26J1	1250-0835	1	4	CONNECTOR-RF SMC M PC 50-OHM	28480	1250-0835
A26J2	1250-0257	1	1	CONNECTOR-RF SMB M PC 50-OHM	28480	1250-0257
A26J3	1250-0835	1		CONNECTOR-RF SMC M PC 50-OHM	28480	1250-0835
A26J4	1250-0835	1		CONNECTOR-RF SMC M PC 50-OHM	28480	1250-0835
A26J5	1250-0835	1		CONNECTOR-RF SMC M PC 50-OHM	28480	1250-0835

*** Indicates factory selected value.**

Table 2. A26 Replaceable Parts (3 of 5)

Reference Designator	HP Part Number	C D	Qty.	Description	Mfr Code	Mfr Part Number
A26L1	9140-1288	5	4	INDUCTOR 220NH +-20% 6D-MM Q=45	06383	ELF0505-SKI-R22M-2
A26L2	9100-3911	1	1	INDUCTOR RF-CH-MLD 220NH 5%	28480	9100-3911
A26L3	9100-2259	8	4	INDUCTOR RF-CH-MLD 1.5UH 10%	28480	9100-2259
A26L4	9140-1288	5		INDUCTOR 220NH +-20% 6D-MM Q=45	06383	ELF0505-SKI-R22M-2
A26L5	9140-1288	5		INDUCTOR 220NH +-20% 6D-MM Q=45	06383	ELF0505-SKI-R22M-2
A26L6	9100-2259	8		INDUCTOR RF-CH-MLD 1.5UH 10%	28480	9100-2259
A26L7	9100-2259	8		INDUCTOR RF-CH-MLD 1.5UH 10%	28480	9100-2259
A26L8	9100-2259	8		INDUCTOR RF-CH-MLD 1.5UH 10%	28480	9100-2259
A26L9	9140-1288	5		INDUCTOR 220NH +-20% 6D-MM Q=45	06383	ELF0505-SKI-R22M-2
A26Q1	1853-0459	3	5	TRANSISTOR PNP SI PD=625MW FT=200MHZ	28480	1853-0459
A26Q2	1855-0609	9	9	TRANSISTOR J-FET N-CHAN TO-92 SI	28480	1855-0609
A26Q3	1854-1073	1	1	TRANSISTOR NPN SI PD=600MW FT=6.5GHZ	28480	1854-1073
A26Q4	1854-0215	1	1	TRANSISTOR NPN SI TO-92 PD=350MW	04713	2N3904
A26Q5	1854-0810	2	1	TRANSISTOR NPN SI PD=625MW FT=200MHZ	28480	1854-0810
A26Q6	1853-0459	3		TRANSISTOR PNP SI PD=625MW FT=200MHZ	28480	1853-0459
A26Q7	1855-0609	9		TRANSISTOR J-FET N-CHAN TO-92 SI	28480	1855-0609
A26Q8	1855-0609	9		TRANSISTOR J-FET N-CHAN TO-92 SI	28480	1855-0609
A26Q9	1855-0609	9		TRANSISTOR J-FET N-CHAN TO-92 SI	28480	1855-0609
A26Q10	1853-0459	3		TRANSISTOR PNP SI PD=625MW FT=200MHZ	28480	1853-0459
A26Q11	1854-0247	9	1	TRANSISTOR NPN SI TO-39 PD=1W FT=800MHZ	28480	1854-0247
A26Q12	1853-0459	3		TRANSISTOR PNP SI PD=625MW FT=200MHZ	28480	1853-0459
A26Q13	1855-0609	9		TRANSISTOR J-FET N-CHAN TO-92 SI	28480	1855-0609
A26Q14	1855-0609	9		TRANSISTOR J-FET N-CHAN TO-92 SI	28480	1855-0609
A26Q15	1855-0609	9		TRANSISTOR J-FET N-CHAN TO-92 SI	28480	1855-0609
A26Q16	1855-0609	9		TRANSISTOR J-FET N-CHAN TO-92 SI	28480	1855-0609
A26Q17	1853-0459	3		TRANSISTOR PNP SI PD=625MW FT=200MHZ	28480	1853-0459
A26Q18	1855-0609	9		TRANSISTOR J-FET N-CHAN TO-92 SI	28480	1855-0609
A26R1	0757-0277	8	9	RESISTOR 49.9 1% .125W F TC=0+-100	28480	0757-0277
A26R2	0757-0394	0	3	RESISTOR 51.1 1% .125W F TC=0+-100	24546	CT4-1/8-T0-51R1-F
A26R3	0757-0440	7	4	RESISTOR 7.5K 1% .125W F TC=0+-100	24546	CT4-1/8-T0-7501-F
A26R4	0698-8827	4	9	RESISTOR 1M 1% .125W F TC=0+-100	28480	0698-8827
A26R5	0757-0444	1	4	RESISTOR 12.1K 1% .125W F TC=0+-100	24546	CT4-1/8-T0-1212-F
A26R6	0757-0441	8	4	RESISTOR 8.25K 1% .125W F TC=0+-100	24546	CT4-1/8-T0-8251-F
A26R7	0757-0442	9	7	RESISTOR 10K 1% .125W F TC=0+-100	24546	CT4-1/8-T0-1002-F
A26R8	0698-8827	4		RESISTOR 1M 1% .125W F TC=0+-100	28480	0698-8827
A26R9	0698-8826	3	4	RESISTOR 825K 1% .125W F TC=0+-100	28480	0698-8826
A26R10	0698-3440	7	3	RESISTOR 196 1% .125W F TC=0+-100	24546	CT4-1/8-T0-196R-F
A26R11	0698-3440	7		RESISTOR 196 1% .125W F TC=0+-100	24546	CT4-1/8-T0-196R-F
A26R12	0757-0199	3	1	RESISTOR 21.5K 1% .125W F TC=0+-100	24546	CT4-1/8-T0-2152-F
A26R13	0757-0442	9		RESISTOR 10K 1% .125W F TC=0+-100	24546	CT4-1/8-T0-1002-F
A26R14	0698-3440	7		RESISTOR 196 1% .125W F TC=0+-100	24546	CT4-1/8-T0-196R-F
A26R15	0757-0277	8		RESISTOR 49.9 1% .125W F TC=0+-100	28480	0757-0277
A26R16	0757-0442	9		RESISTOR 10K 1% .125W F TC=0+-100	24546	CT4-1/8-T0-1002-F
A26R17	0757-0280	3	5	RESISTOR 1K 1% .125W F TC=0+-100	24546	CT4-1/8-T0-1001-F
A26R18	0757-0403	2	2	RESISTOR 121 1% .125W F TC=0+-100	24546	CT4-1/8-T0-121R-F
A26R19	0757-0401	0	2	RESISTOR 100 1% .125W F TC=0+-100	24546	CT4-1/8-T0-101-F
A26R20	0757-0442	9		RESISTOR 10K 1% .125W F TC=0+-100	24546	CT4-1/8-T0-1002-F
A26R21	0757-0438	3	2	RESISTOR 5.11K 1% .125W F TC=0+-100	24546	CT4-1/8-T0-5111-F
A26R22	0757-0403	2		RESISTOR 121 1% .125W F TC=0+-100	24546	CT4-1/8-T0-121R-F
A26R23	0757-0277	8		RESISTOR 49.9 1% .125W F TC=0+-100	28480	0757-0277
A26R24	0757-0277	8		RESISTOR 49.9 1% .125W F TC=0+-100	28480	0757-0277
A26R25	0757-0277	8		RESISTOR 49.9 1% .125W F TC=0+-100	28480	0757-0277

*** Indicates factory selected value.**

Table 2. A26 Replaceable Parts (4 of 5)

Reference Designator	HP Part Number	C D	Qty.	Description	Mfr Code	Mfr Part Number
A26R26	0698-3432	7	1	RESISTOR 26.1 1% .125W F TC=0+-100	03888	PME55-1/8-T0-26R1-F
A26R27	0757-0280	3		RESISTOR 1K 1% .125W F TC=0+-100	24546	CT4-1/8-T0-1001-F
A26R28	0757-0346	2	2	RESISTOR 10 1% .125W F TC=0+-100	28480	0757-0346
A26R29	0757-0277	8		RESISTOR 49.9 1% .125W F TC=0+-100	28480	0757-0277
A26R30	0757-0394	0		RESISTOR 51.1 1% .125W F TC=0+-100	24546	CT4-1/8-T0-51R1-F
A26R31	0757-0440	7		RESISTOR 7.5K 1% .125W F TC=0+-100	24546	CT4-1/8-T0-7501-F
A26R32	0698-8827	4		RESISTOR 1M 1% .125W F TC=0+-100	28480	0698-8827
A26R33	0757-0444	1		RESISTOR 12.1K 1% .125W F TC=0+-100	24546	CT4-1/8-T0-1212-F
A26R34	0757-0441	8		RESISTOR 8.25K 1% .125W F TC=0+-100	24546	CT4-1/8-T0-8251-F
A26R35	0757-0442	9		RESISTOR 10K 1% .125W F TC=0+-100	24546	CT4-1/8-T0-1002-F
A26R36	0698-8827	4		RESISTOR 1M 1% .125W F TC=0+-100	28480	0698-8827
A26R37	0698-8826	3		RESISTOR 825K 1% .125W F TC=0+-100	28480	0698-8826
A26R38	0757-0458	7	1	RESISTOR 51.1K 1% .125W F TC=0+-100	24546	CT4-1/8-T0-5112-F
A26R39	0757-1094	9	1	RESISTOR 1.47K 1% .125W F TC=0+-100	24546	CT4-1/8-T0-1471-F
A26R40	0757-0274	5	1	RESISTOR 1.21K 1% .125W F TC=0+-100	24546	CT4-1/8-T0-1211-F
A26R41	0757-0428	1	1	RESISTOR 1.62K 1% .125W F TC=0+-100	24546	CT4-1/8-T0-1621-F
A26R42	0757-0277	8		RESISTOR 49.9 1% .125W F TC=0+-100	28480	0757-0277
A26R43				NOT ASSIGNED		
A26R44	0757-0346	2		RESISTOR 10 1% .125W F TC=0+-100	28480	0757-0346
A26R45	0757-0277	8		RESISTOR 49.9 1% .125W F TC=0+-100	28480	0757-0277
A26R46	0757-0394	0		RESISTOR 51.1 1% .125W F TC=0+-100	24546	CT4-1/8-T0-51R1-F
A26R47	0757-0440	7		RESISTOR 7.5K 1% .125W F TC=0+-100	24546	CT4-1/8-T0-7501-F
A26R48	0698-8827	4		RESISTOR 1M 1% .125W F TC=0+-100	28480	0698-8827
A26R49	0757-0444	1		RESISTOR 12.1K 1% .125W F TC=0+-100	24546	CT4-1/8-T0-1212-F
A26R50	0757-0441	8		RESISTOR 8.25K 1% .125W F TC=0+-100	24546	CT4-1/8-T0-8251-F
A26R51	0757-0442	9		RESISTOR 10K 1% .125W F TC=0+-100	24546	CT4-1/8-T0-1002-F
A26R52	0698-8827	4		RESISTOR 1M 1% .125W F TC=0+-100	28480	0698-8827
A26R53	0698-8826	3		RESISTOR 825K 1% .125W F TC=0+-100	28480	0698-8826
A26R54				NOT ASSIGNED		
A26R55	0757-0465	6	2	RESISTOR 100K 1% .125W F TC=0+-100	24546	CT4-1/8-T0-1003-F
A26R56	0698-3157	3	2	RESISTOR 19.6K 1% .125W F TC=0+-100	24546	CT4-1/8-T0-1962-F
A26R57	0698-3157	3		RESISTOR 19.6K 1% .125W F TC=0+-100	24546	CT4-1/8-T0-1962-F
A26R58	0757-0280	3		RESISTOR 1K 1% .125W F TC=0+-100	24546	CT4-1/8-T0-1001-F
A26R59	0757-0280	3		RESISTOR 1K 1% .125W F TC=0+-100	24546	CT4-1/8-T0-1001-F
A26R60	0757-0419	0	2	RESISTOR 681 1% .125W F TC=0+-100	24546	CT4-1/8-T0-681R-F
A26R61	0757-0419	0		RESISTOR 681 1% .125W F TC=0+-100	24546	CT4-1/8-T0-681R-F
A26R62	0757-0280	3		RESISTOR 1K 1% .125W F TC=0+-100	24546	CT4-1/8-T0-1001-F
A26R63	0698-8827	4		RESISTOR 1M 1% .125W F TC=0+-100	28480	0698-8827
A26R64	0757-0463	4	1	RESISTOR 82.5K 1% .125W F TC=0+-100	24546	CT4-1/8-T0-8252-F
A26R65	0757-0279	0	2	RESISTOR 3.16K 1% .125W F TC=0+-100	24546	CT4-1/8-T0-3161-F
A26R66	2100-0567	0	1	RESISTOR-TRMR 2K 10% C TOP-ADJ 1-TRN	28480	2100-0567
A26R67	0757-0277	8		RESISTOR 49.9 1% .125W F TC=0+-100	28480	0757-0277
A26R68	0698-7205	0	1	RESISTOR 51.1 1% .05W F TC=0+-100	24546	C3-1/8-T0-51R1-F
A26R69	0757-0440	7		RESISTOR 7.5K 1% .125W F TC=0+-100	24546	CT4-1/8-T0-7501-F
A26R70	0698-8827	4		RESISTOR 1M 1% .125W F TC=0+-100	28480	0698-8827
A26R71	0757-0444	1		RESISTOR 12.1K 1% .125W F TC=0+-100	24546	CT4-1/8-T0-1212-F
A26R72	0757-0441	8		RESISTOR 8.25K 1% .125W F TC=0+-100	24546	CT4-1/8-T0-8251-F
A26R73	0757-0442	9		RESISTOR 10K 1% .125W F TC=0+-100	24546	CT4-1/8-T0-1002-F
A26R74	0698-8827	4		RESISTOR 1M 1% .125W F TC=0+-100	28480	0698-8827
A26R75	0698-8826	3		RESISTOR 825K 1% .125W F TC=0+-100	28480	0698-8826
A26R76	0757-0465	6		RESISTOR 100K 1% .125W F TC=0+-100	24546	CT4-1/8-T0-1003-F
A26R77	0757-0279	0		RESISTOR 3.16K 1% .125W F TC=0+-100	24546	CT4-1/8-T0-3161-F
A26R78	2100-3252	6	1	RESISTOR-TRMR 5K 10% C TOP-ADJ 1-TRN	28480	2100-3252

*** Indicates factory selected value.**

Table 2. A26 Replaceable Parts (5 of 5)

Reference Designator	HP Part Number	C D	Qty.	Description	Mfr Code	Mfr Part Number
A26R79	0757-0401	0		RESISTOR 100 1% .125W F TC=0+-100	24546	CT4-1/8-T0-101-F
A26R80	0757-0438	3		RESISTOR 5.11K 1% .125W F TC=0+-100	24546	CT4-1/8-T0-5111-F
A26U1	1826-0147	9	1	IC 7812 V RGLTR TO-220	04713	MC7812CP
A26U2	1826-1696	5	1	IC WIDEBAND AMPL VID 14-DIP-P PKG	S0545	UPC1664C
A26U3	1826-0221	0	1	IC V RGLTR TO-220	04713	MC7912CT
A26U4	1826-0519	9	1	IC OP AMP LOW-BIAS-H-IMPD 8-DIP-P PKG	01295	TL071CP
A26W1	04195-61657	9	1	WIRE ASSEMBLY 10PIN	28480	04195-61657
	9170-1397	0	2	BEAD INDUCTOR	28480	9170-1397
	04195-00666		1	CASE SHIELD, COMPONENT SIDE		
	04195-00667		1	CASE SHIELD, CIRCUIT SIDE		

*** Indicates factory selected value.**

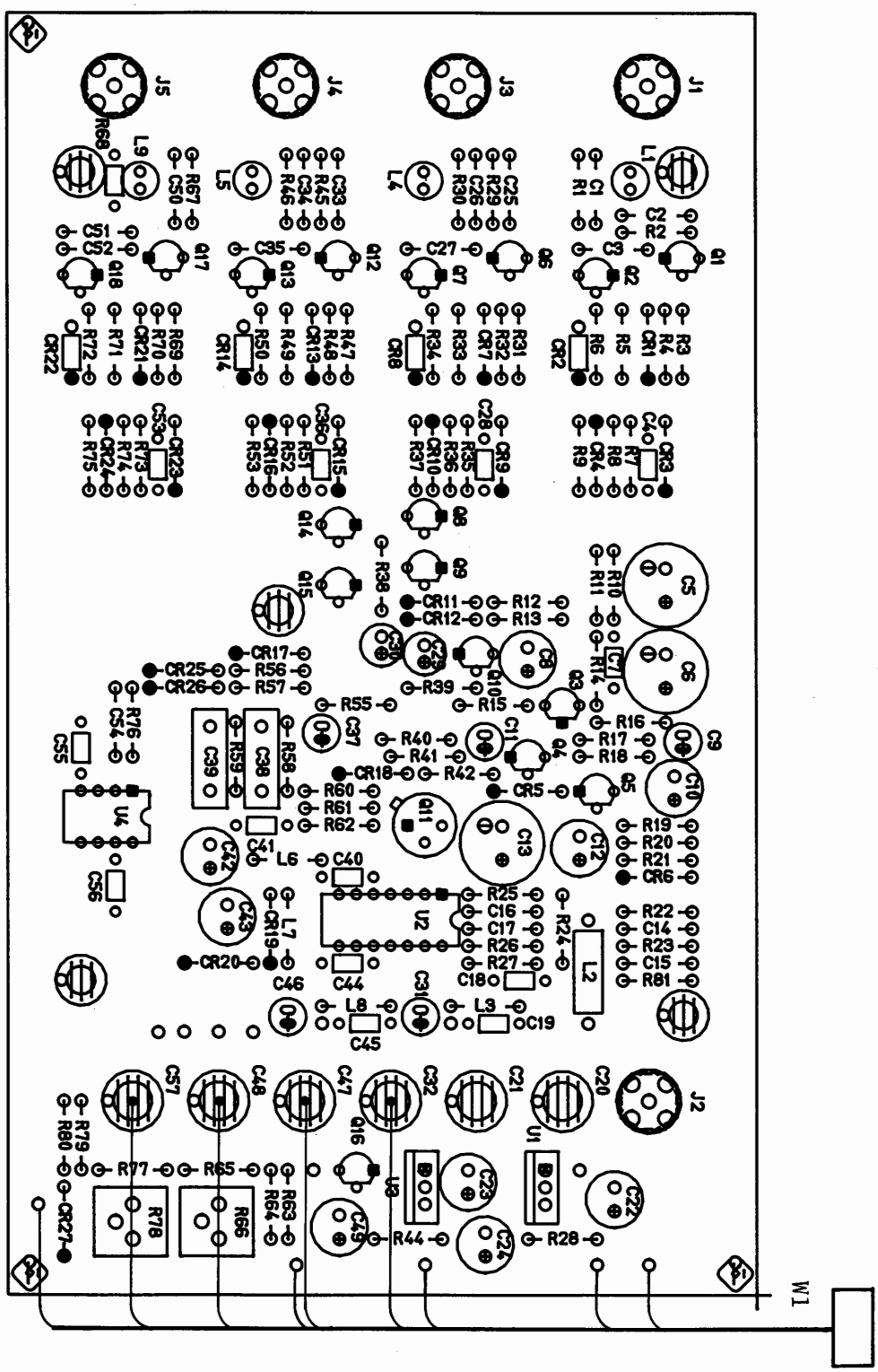

A26 Low Frequency Multiplexer Component Locations

A26 LOW FREQUENCY MULTIPLEXER

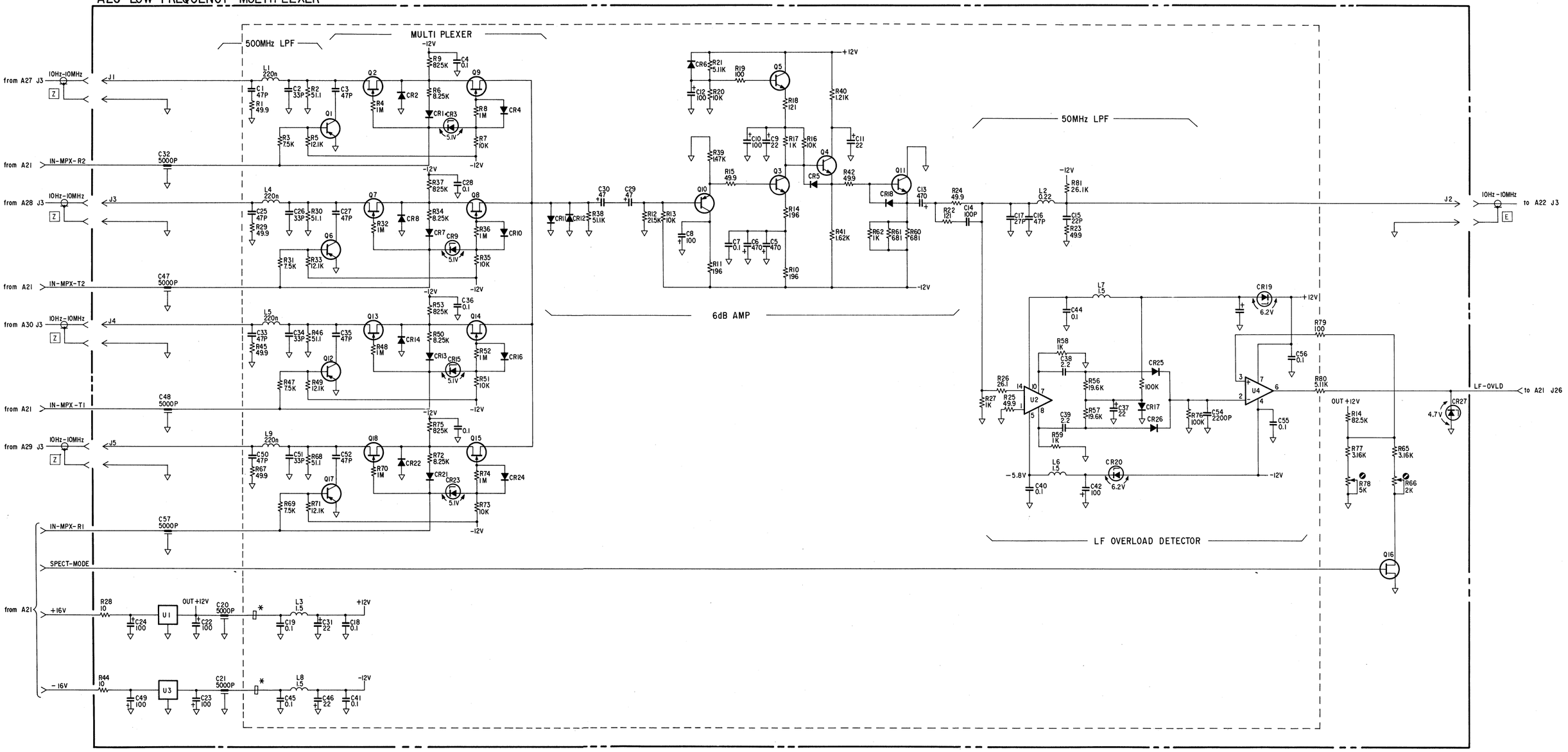

NOTES:

1. REFERENCE DESIGNATORS WITHIN THIS ASSEMBLY ARE ABBREVIATED. PREFIX ABBREVIATION WITH ASSEMBLY NUMBER FOR COMPLETE REFERENCE DESIGNATOR.

2. UNLESS OTHERWISE INDICATED:

   RESISTANCE IN OHMS (Ω)
   CAPACITANCE IN MICROFARADS (μF)
   INDUCTANCE IN MICROHENRIES (μH)

3. ADJUSTMENT NAMES

   A26R66
   A26R78

INPUT ATTENUATOR SERVICE SHEET

The A27, A28, A29, and A30 input attenuators attenuate the respective signals input through the R2, T2, R1, T1 connectors, and output the attenuated signals depending on the frequency to the A25 or A26 Frequency Multiplexer PC boards.

CIRCUIT DESCRIPTION:

Input attenuator boards A27, A28, A29, and A30 use the same circuit, including the attenuator, high pass filter, and low pass filter. Figure 1 shows the block diagram of the input attenuator board.

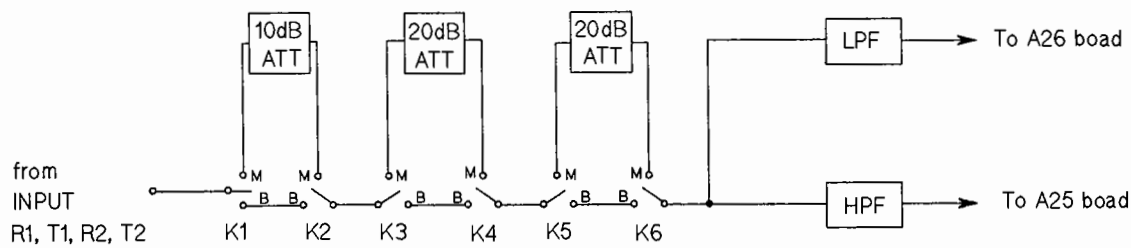

M: make
B: break

Figure 1. A27, A28, A29, A30 Input Attenuator Block Diagram

Attenuator: (K1 through K6 and R7 through R19)

The input attenuator consists of a 10 dB attenuator, two 20 dB attenuators, and six relay switches, as shown in Figure 1. The attenuation can be varied from 0 to 50 dB in 10 dB steps. The relationship between the Relay-switch-setting and the attenuation is listed in Table 1.

Table 1. Relay Switch Setting

Attenuation	K1	K2	K3	K4	K5	K6
0 dB	B	B	B	B	B	B
10 dB	M	M	B	B	B	B
20 dB	B	B	M	M	B	B
30 dB	M	M	M	M	B	B
40 dB	B	B	M	M	M	M
50 dB	M	M	M	M	M	M

M: make
B: break

High Pass Filter:

The High Pass Filter passes input signals which are ≥ 10 MHz to the A25 High Frequency Multiplexer board. The cut off frequency is approximately 7 MHz.

Low Pass Filter:

The Low Pass Filter passes input signals which are < 10 MHz to the A26 Low Frequency Multiplexer board. The cut off frequency is approximately 15 MHz.

Table 2. A27, A28, A29, A30 Replaceable Parts (1 of 2)

Reference Designator	HP Part Number	C D	Qty.	Description	Mfr Code	Mfr Part Number
A27 to A30						
A27				R1 INPUT ATTENUATOR		
A27	04195-66527	2	4	INPUT ATT BD ASY	28480	04195-66527
A27C1	0160-4810	8	2	CAPACITOR-FXD 330PF +-5% 100VDC CER	28480	0160-4810
A27C2	0160-4810	8		CAPACITOR-FXD 330PF +-5% 100VDC CER	28480	0160-4810
A27C3	0160-4808	4	3	CAPACITOR-FXD 470PF +-5% 100VDC CER	28480	0160-4808
A27C4	0160-4808	4		CAPACITOR-FXD 470PF +-5% 100VDC CER	28480	0160-4808
A27C5	0160-4790	3	1	CAPACITOR-FXD 12PF +-5% 100VDC CER 0+-30	28480	0160-4790
A27C6	0160-4814	2	2	CAPACITOR-FXD 150PF +-5% 100VDC CER	28480	0160-4814
A27C7	0160-4814	2		CAPACITOR-FXD 150PF +-5% 100VDC CER	28480	0160-4814
A27C8				NOT ASSIGNED		
A27C9	0160-4803	9	1	CAPACITOR-FXD 68PF +-5% 100VDC CER 0+-30	28480	0160-4803
A27C10	0160-4808	4		CAPACITOR-FXD 470PF +-5% 100VDC CER	28480	0160-4808
A27C11	0160-4802	8	1	CAPACITOR-FXD 82PF +-5% 100VDC CER 0+-30	28480	0160-4802
A27C12	0160-4800	6	2	CAPACITOR-FXD 120PF +-5% 100VDC CER	28480	0160-4800
A27C13	0160-4800	6		CAPACITOR-FXD 120PF +-5% 100VDC CER	28480	0160-4800
A27C14	0160-2437	1	3	CAPACITOR-FDTHRU 5000PF +80 -20% 200V	28480	0160-2437
	2580-0006	8		NUT-HEX	28480	2580-0006
	8150-3490	5		WIRE	28480	8150-3490
A27C15	0160-2437	1		CAPACITOR-FDTHRU 5000PF +80 -20% 200V	28480	0160-2437
	2580-0006	8		NUT-HEX	28480	2580-0006
	8150-3490	5		WIRE	28480	8150-3490
A27C16	0160-2437	1		CAPACITOR-FDTHRU 5000PF +80 -20% 200V	28480	0160-2437
	2580-0006	8		NUT-HEX	28480	2580-0006
	8150-3490	5		WIRE	28480	8150-3490
A27J1	1250-0836	2	3	CONNECTOR-RF SMC M PC 50-OHM	28480	1250-0836
A27J2	1250-0836	2		CONNECTOR-RF SMC M PC 50-OHM	28480	1250-0836
A27J3	1250-0836	2		CONNECTOR-RF SMC M PC 50-OHM	28480	1250-0836
A27K1	0490-1627	8	6	ER DIVISION	28480	0490-1627
A27K2	0490-1627	8		ER DIVISION	28480	0490-1627
A27K3	0490-1627	8		ER DIVISION	28480	0490-1627
A27K4	0490-1627	8		ER DIVISION	28480	0490-1627
A27K5	0490-1627	8		ER DIVISION	28480	0490-1627
A27K6	0490-1627	8		ER DIVISION	28480	0490-1627
A27L1	9140-0395	3	1	INDUCTOR RF-CH-MLD 560NH 5%	28480	9140-0395
A27L2	9100-3548	0	2	INDUCTOR RF-CH-MLD 470NH 5%	28480	9100-3548
A27L3	9140-0266	7	1	INDUCTOR RF-CH-MLD 1.8UH 5%	28480	9140-0266
A27L4	9100-3551	5	1	INDUCTOR RF-CH-MLD 1UH 5%	28480	9100-3551
A27L5	9100-3911	1	1	INDUCTOR RF-CH-MLD 220NH 5%	28480	9100-3911
A27L6	9100-3548	0		INDUCTOR RF-CH-MLD 470NH 5%	28480	9100-3548
A27L7	9100-2486	3	1	INDUCTOR RF-CH-MLD 330NH 5%	28480	9100-2486
A27R1	0757-0277	8	2	RESISTOR 49.9 1% .125W F TC=0+-100	28480	0757-0277
A27R2	0757-0389	3	2	RESISTOR 33.2 1% .125W F TC=0+-100	28480	0757-0389
A27R3	0757-0389	3		RESISTOR 33.2 1% .125W F TC=0+-100	28480	0757-0389
A27R4	0757-0382	6	2	RESISTOR 16.2 1% .125W F TC=0+-100	19701	5033R-1/8-T0-16R2-F
A27R5	0757-0382	6		RESISTOR 16.2 1% .125W F TC=0+-100	19701	5033R-1/8-T0-16R2-F
A27R6	0757-0277	8		RESISTOR 49.9 1% .125W F TC=0+-100	28480	0757-0277
A27R7	0699-1672	5	6	RESISTOR 96.25 .1% .125W F TC=0+-50	28480	0699-1672
A27R8	0699-1673	6	5	RESISTOR 71.15 .1% .125W F TC=0+-50	28480	0699-1673
A27R9	0699-1672	5		RESISTOR 96.25 .1% .125W F TC=0+-50	28480	0699-1672
A27R10	0699-1672	5		RESISTOR 96.25 .1% .125W F TC=0+-50	28480	0699-1672
A27R11	0699-1673	6		RESISTOR 71.15 .1% .125W F TC=0+-50	28480	0699-1673
A27R12	0699-2397	3	2	RESISTOR 48.12 .1% .125W TF TC=0+-50	07953	RN14C2B 48.12 OHM B

*** Indicates factory selected value.**

Table 2. A27, A28, A29, A30 Replaceable Parts (2 of 2)

Reference Designator	HP Part Number	C D	Qty.	Description	Mfr Code	Mfr Part Number
A27R13	0699-1673	6		RESISTOR 71.15 .1% .125W F TC=0+-50	28480	0699-1673
A27R14	0699-1672	5		RESISTOR 96.25 .1% .125W F TC=0+-50	28480	0699-1672
A27R15	0699-1672	5		RESISTOR 96.25 .1% .125W F TC=0+-50	28480	0699-1672
A27R16	0699-1673	6		RESISTOR 71.15 .1% .125W F TC=0+-50	28480	0699-1673
A27R17	0699-2397	3		RESISTOR 48.12 .1% .125W TF TC=0+-50	07953	RN14C2B 48.12 OHM B
A27R18	0699-1673	6		RESISTOR 71.15 .1% .125W F TC=0+-50	28480	0699-1673
A27R19	0699-1672	5		RESISTOR 96.25 .1% .125W F TC=0+-50	28480	0699-1672
A27R20	0757-0280	3	1	RESISTOR 1K 1% .125W F TC=0+-100	24546	CT4-1/8-T0-1001-F
A27W1	04195-61658	0	1	WIRE ASSEMBLY 4PIN	28480	04195-61658
A28				T1 INPUT ATTENUATOR		
A28	04195-66527	2		INPUT ATT BD ASY SAME AS A27	28480	04195-66527
A29				T1 INPUT ATTENUATOR		
A29	04195-66527	2		INPUT ATT BD ASY SAME AS A27	28480	04195-66527
A30				T1 INPUT ATTENUATOR		
A30	04195-66527	2		INPUT ATT BD ASY SAME AS A27	28480	04195-66527
	04195-00903		2	CASE SHIELD, A27 CIRCUIT SIDE		
	04195-00903			CASE SHIELD, A29 CIRCUIT SIDE		
	04195-00901		2	CASE SHIELD, BETWEEN A27 AND A28		
	04195-00901			CASE SHIELD, BETWEEN A29 AND A30		

*** Indicates factory selected value.**

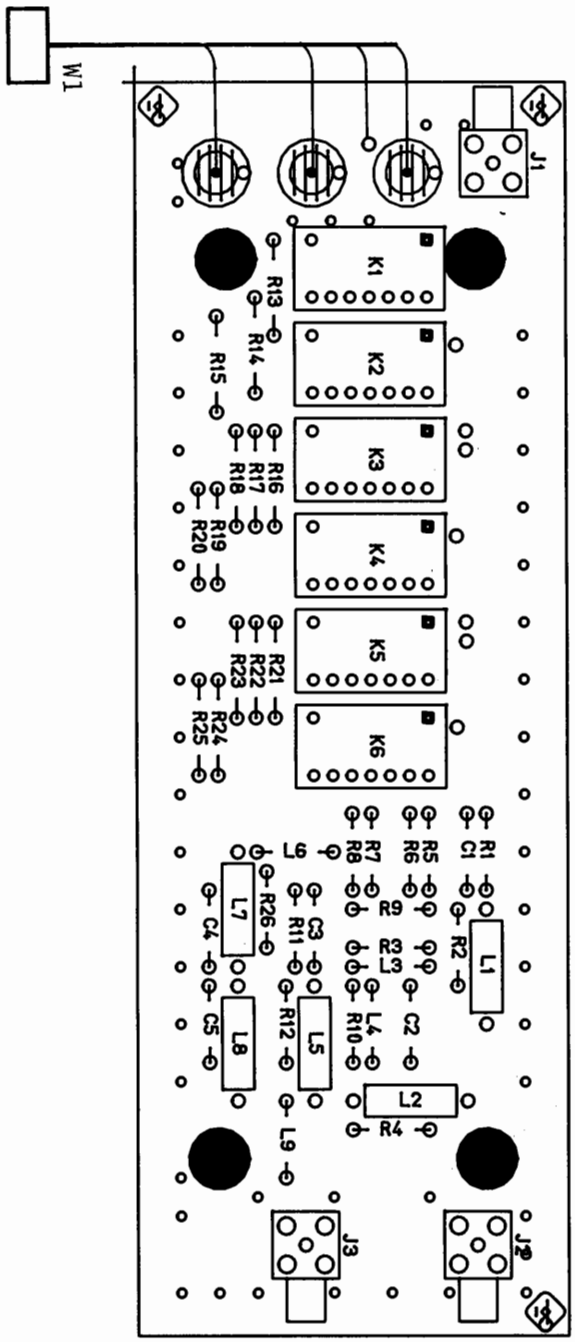

A27, A28, A29, A30 Input Attenuator Component Locations

A27 R2 INPUT ATTENUATER

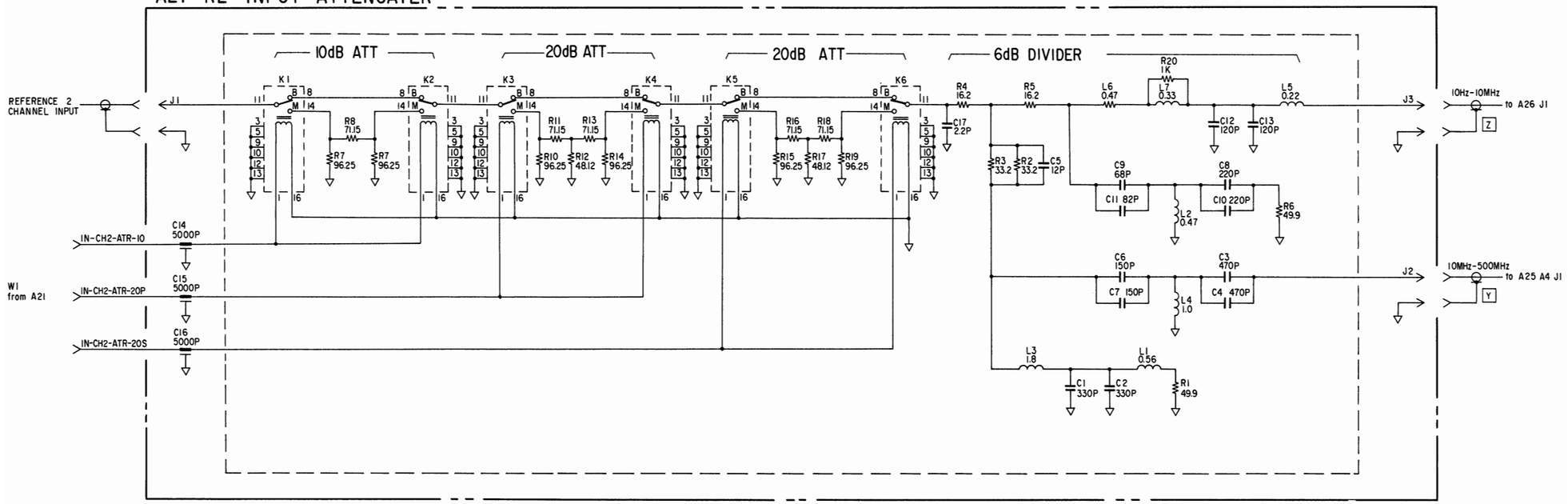

A28 T2 INPUT ATTENUATER

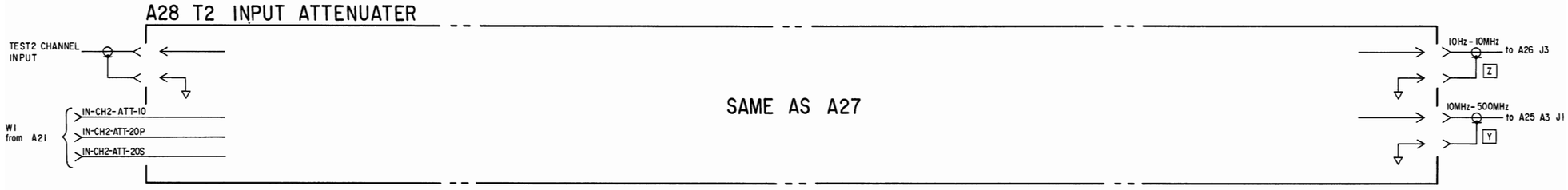

A29 R1 INPUT ATTENUATER

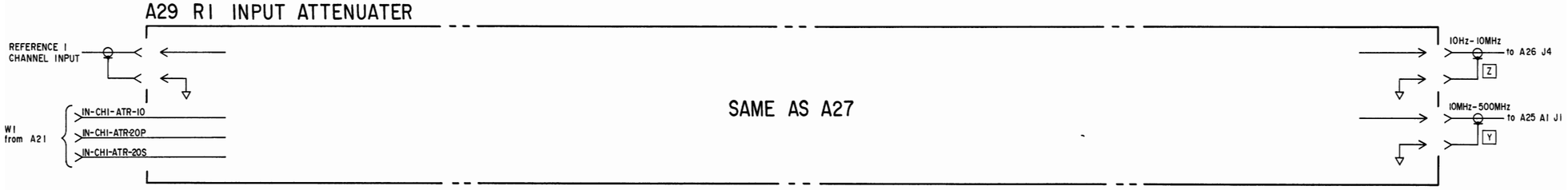

A30 T1 INPUT ATTENUATER

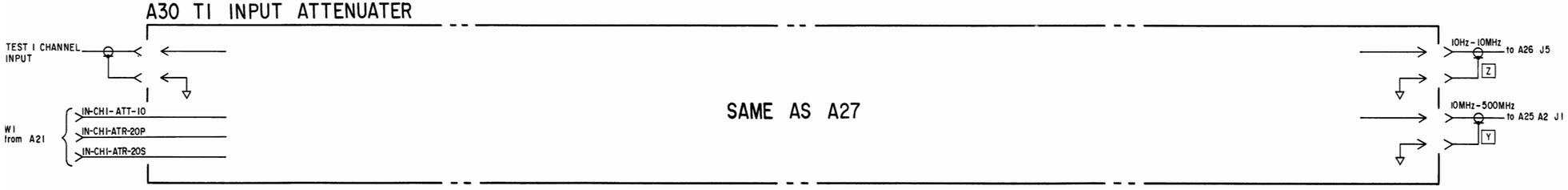

REFERENCE FREQUENCY CONVERTER SERVICE SHEET

The A130 Reference Frequency Converter board supplies the 80 MHz and 160 MHz Local OSC signals to the IF converters, and divides and filters the 80 MHz input signal from the A10 board to generate the 6.67 MHz reference signal for the signal source third IF converter.

CIRCUIT DESCRIPTION:

The A130 Reference Frequency Converter consists of an 80 MHz bandpass filter, a doubler, a 160 MHz bandpass filter, a ÷12 divider, an auto level controller, an OSC level vernier, and a 6.67 MHz bandpass filter.

80 MHz BANDPASS FILTER:

The 80 MHz BPF filters the 80 MHz signal from the A10 board. The 80 MHz signal is fed to the receiver/source third IF converter through the A31 board, and is used as the LOCAL OSC signal.

DOUBLER, 160 MHz BANDPASS FILTER:

The frequency doubler generates second harmonics of the 80 MHz signal from the A10 board, by amplifying and distorting the 80 MHz signal. The output signal of doubler is filtered by the 160 MHz BPF, and the 160 MHz signal is fed to the receiver/source second IF converter through the A32 board, and is used as the LOCAL OSC signal.

÷12 DIVIDER: (U4, U5)

The ÷12 divider (U4, U5) divides the 80 MHz signal from the A10 reference frequency generator, and the divided signal (6.67 MHz) controls switching transistors Q1 and Q2.

AUTO LEVEL CONTROLLER: (U1, U3)

The Auto Level Controller (ALC) consists of a differential amplifier (U1A), an integrator (U1B), and a switch (U3).

The ALC loop is closed when U3 is connected to the S2 side. U3 is controlled by the measurement frequency, and is connected to the S2 side when the measurement frequency is ≥ 10 MHz. When the U3 is connected to the S1 side, the ALC output is the ALC-DA-DC signal which is applied from the D/A converter on the A50 board. The ALC-DA-DC signal level depends on the U3 connection or the HP 4195A output level setting.

The differential amplifier amplifies the voltage difference between the LEVEL-DTCT signal and LEVEL-DTCT-RTN signal (GND) which are applied from the level detector on the A44 board. The output voltage of the differential amplifier charge/discharges the integrator.

The integrator controls the ALC output level, by comparing the ALC-DA-DC signal and the differential amplifier output. If the differential amplifier output level is less than the ALC-DA-DC signal level, the integrator output voltage will increase. If the two inputs of the integrator are at the same level, the integrator output level will stay at a constant level.

OSC LEVEL VERNIER: (U2, Q1, Q2, Q3, Q4)

The OSC level vernier is used to keep the 6.67 MHz signal at constant level proportional to the ALC output voltage.

Q1 and Q2 are the switching transistors which driven by the ÷12 divider output signal (6.67 MHz). The switching transistors are alternately turned ON to generate the 6.67 MHz signal.

The 6.67 MHz signal level is controlled by the output of U2A which is controlled by the ALC output level. U2B and Q4 are a unity gain voltage buffer for the ALC output level.

TROUBLESHOOTING GUIDE:

1. U3 Output Voltage:

With the following settings, the ALC-DA-DC signal level will be approximately 7.5 V, and the U3's output voltage will be approximately 6.5 V. Refer to Appendix B for the service function.

HP 4195A setting:
Service Function No. 52

ALC:	OFF
Sweep DAC data:	4095
Spot DAC data:	4095

2. 160 MHz Output Waveform:

Setting:

Spectrum Analyzer:

START:	50 MHz
STOP:	200 MHz

HP 4195A:

Disconnect the coaxial cable from J2 on the A130 board

Cable Connection:

HP 4195A A10J2 to Spectrum Analyzer INPUT

The 80 MHz signal level should be approx. 50 dBc less than the 160 MHz signal level

Waveform:

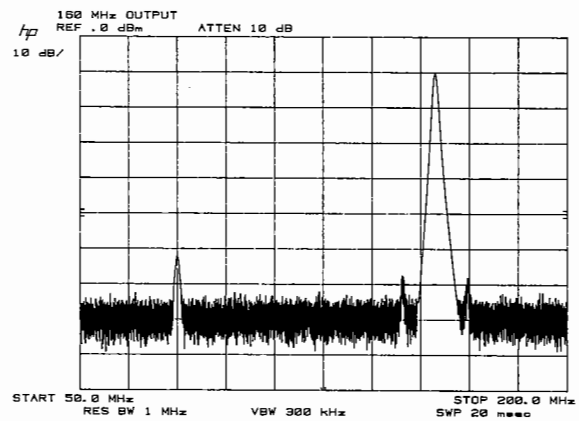

3. 80 MHz Output Waveform:

Setting:

Spectrum Analyzer:

START:	50 MHz
STOP:	200 MHz

HP 4195A:

Disconnect the coaxial cable from J1 on the A130 board

Cable Connection:

HP 4195A A10J1 to Spectrum Analyzer INPUT

The 160 MHz signal level should be approx. 45 dBc less than the 80 MHz signal level

Waveform:

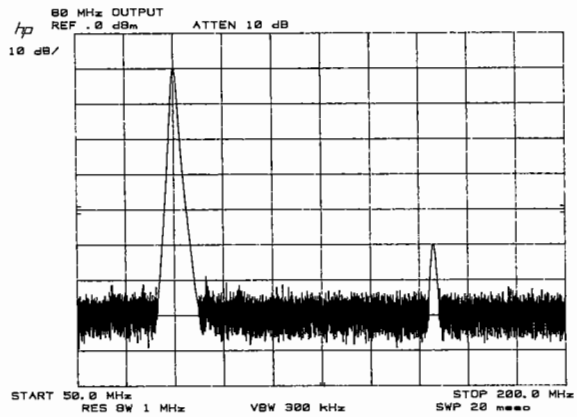

4. 6.67 MHz Output Waveform:

Setting:

Spectrum Analyzer:

CENTER:	6.67 MHz
SPAN:	1 MHz

HP 4195A:

1 Disconnect the coaxial cable from J3 on the A130 board
2 Enter the Service Function No. 52 mode, and set as follows

ALC:	OFF
Sweep DAC data:	4095
Spot DAC data:	4095

Cable Connection:

HP 4195A A10J3 to Spectrum Analyzer INPUT

The signal level should be between -11 dBm and -3.5 dBm.

Waveform:

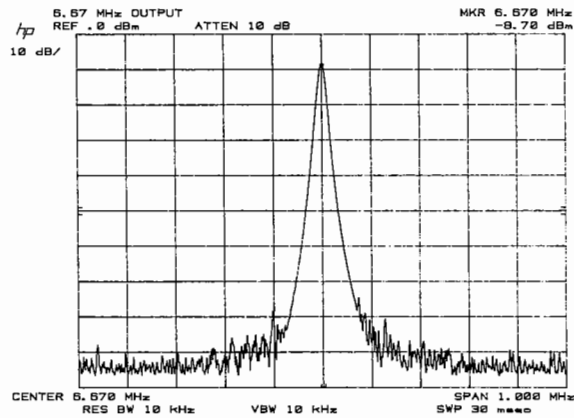

5. ÷6 Divider Output Waveform:

Setting:

Oscilloscope:

CHAN 1:	1 V/div
CHAN 2:	500 mV/div
TIME:	50 nsec/div
TRIG:	CHAN 1, -Slope
TRIG LEVEL:	3.7 V

Probe Tip (CH 1):
C51 (U8 side lead)
Probe Tip (CH 2):
U5 pin 14

GRAPH 1:
Amplifier (U8) output
GRAPH 2:
÷6 divider (U5) output

Waveform:

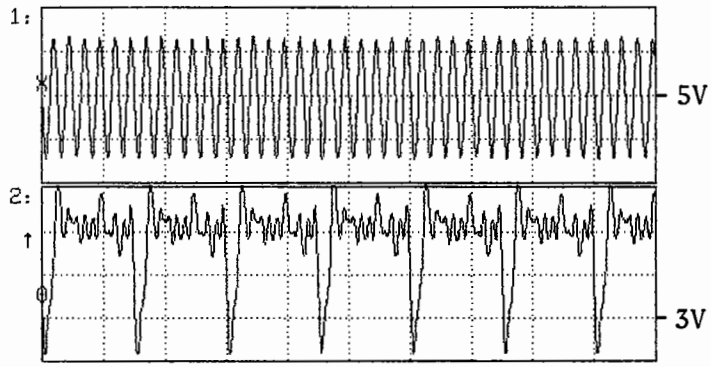

6. ÷2 Divider Output Waveform:

Setting:

Oscilloscope:

CHAN 1:	1 V/div
CHAN 2:	500 mV/div
TIME:	50 nsec/div
TRIG:	CHAN 1, -Slope
TRIG LEVEL:	3.7 V

Probe Tip (CH 1):
C51 (U8 side lead)
Probe Tip (CH 2):
U4 pin 15

GRAPH 1:
Amplifier (U8) output
GRAPH 2:
÷2 divider (U4B) output

Waveform:

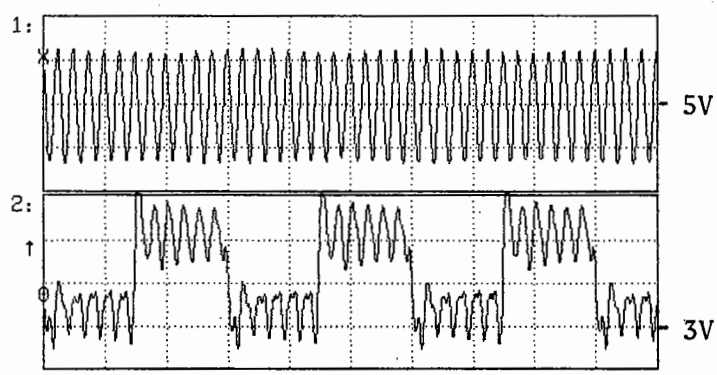

Table 1. A130 Replaceable Parts (1 of 4)

Reference Designator	HP Part Number	C D	Qty.	Description	Mfr Code	Mfr Part Number
A130				REFERENCE FREQUENCY CONVERTER		
A130	04195-66530	7	1	REF FREQ GEN BD	28480	04195-66530
A130C1	0160-2437	1	7	CAPACITOR-FDTHRU 5000PF +80 -20% 200V	28480	0160-2437
	2580-0006	8	7	NUT-HEX	28480	2580-0006
	9170-1397	0	7	BEAD INDUCTOR	28480	9170-1397
A130C2	0160-2437	1		CAPACITOR-FDTHRU 5000PF +80 -20% 200V	28480	0160-2437
	2580-0006	8		NUT-HEX	28480	2580-0006
	9170-1397	0		BEAD INDUCTOR	28480	9170-1397
A130C3	0160-2437	1		CAPACITOR-FDTHRU 5000PF +80 -20% 200V	28480	0160-2437
	2580-0006	8		NUT-HEX	28480	2580-0006
	9170-1397	0		BEAD INDUCTOR	28480	9170-1397
A130C4	0160-2437	1		CAPACITOR-FDTHRU 5000PF +80 -20% 200V	28480	0160-2437
	2580-0006	8		NUT-HEX	28480	2580-0006
	9170-1397	0		BEAD INDUCTOR	28480	9170-1397
A130C5	0160-4795	8	1	CAPACITOR-FXD 4.7PF +-.5PF 100VDC CER	28480	0160-4795
A130C6	0160-4824	4	2	CAPACITOR-FXD 680PF +-5% 100VDC CER	28480	0160-4824
A130C7	0160-6561	0	17	CAPACITOR-FXD .1UF +-20% 50VDC CER	16299	CAC02Z5U104M050A
A130C8	0160-6561	0		CAPACITOR-FXD .1UF +-20% 50VDC CER	16299	CAC02Z5U104M050A
A130C9	0160-4807	3	2	CAPACITOR-FXD 33PF +-5% 100VDC CER 0+-30	28480	0160-4807
A130C10	0160-4807	3		CAPACITOR-FXD 33PF +-5% 100VDC CER 0+-30	28480	0160-4807
A130C11	0160-6561	0		CAPACITOR-FXD .1UF +-20% 50VDC CER	16299	CAC02Z5U104M050A
A130C12	0160-4790	3	2	CAPACITOR-FXD 12PF +-5% 100VDC CER 0+-30	28480	0160-4790
A130C13	0160-4794	7	2	CAPACITOR-FXD 5.6PF +-.5PF 100VDC CER	28480	0160-4794
A130C14	0160-4787	8	1	CAPACITOR-FXD 22PF +-5% 100VDC CER 0+-30	28480	0160-4787
A130C15	0160-4794	7		CAPACITOR-FXD 5.6PF +-.5PF 100VDC CER	28480	0160-4794
A130C16	0160-4790	3		CAPACITOR-FXD 12PF +-5% 100VDC CER 0+-30	28480	0160-4790
A130C17	0160-4822	2	6	CAPACITOR-FXD 1000PF +-5% 100VDC CER	28480	0160-4822
A130C18	0160-4814	2	1	CAPACITOR-FXD 150PF +-5% 100VDC CER	28480	0160-4814
A130C19	0160-4824	4		CAPACITOR-FXD 680PF +-5% 100VDC CER	28480	0160-4824
A130C20	0160-6561	0		CAPACITOR-FXD .1UF +-20% 50VDC CER	16299	CAC02Z5U104M050A
A130C21	0160-6561	0		CAPACITOR-FXD .1UF +-20% 50VDC CER	16299	CAC02Z5U104M050A
A130C22	0160-4822	2		CAPACITOR-FXD 1000PF +-5% 100VDC CER	28480	0160-4822
A130C23	0160-6561	0		CAPACITOR-FXD .1UF +-20% 50VDC CER	16299	CAC02Z5U104M050A
A130C24	0160-6561	0		CAPACITOR-FXD .1UF +-20% 50VDC CER	16299	CAC02Z5U104M050A
A130C25	0160-6561	0		CAPACITOR-FXD .1UF +-20% 50VDC CER	16299	CAC02Z5U104M050A
A130C26	0160-6561	0		CAPACITOR-FXD .1UF +-20% 50VDC CER	16299	CAC02Z5U104M050A
A130C27	0160-6561	0		CAPACITOR-FXD .1UF +-20% 50VDC CER	16299	CAC02Z5U104M050A
A130C28	0160-6561	0		CAPACITOR-FXD .1UF +-20% 50VDC CER	16299	CAC02Z5U104M050A
A130C29	0160-6336	7	2	CAP 2200PF	28480	0160-6336
A130C30	0160-6336	7		CAP 2200PF	28480	0160-6336
A130C31	0160-6561	0		CAPACITOR-FXD .1UF +-20% 50VDC CER	16299	CAC02Z5U104M050A
A130C32	0160-4832	4	5	CAPACITOR-FXD .01UF +-10% 100VDC CER	28480	0160-4832
A130C33	0160-4832	4		CAPACITOR-FXD .01UF +-10% 100VDC CER	28480	0160-4832
A130C34	0160-4791	4	2	CAPACITOR-FXD 10PF +-5% 100VDC CER 0+-30	28480	0160-4791
A130C35	0160-4793	6	1	CAPACITOR-FXD 6.8PF +-.5PF 100VDC CER	28480	0160-4793
A130C36	0160-4791	4		CAPACITOR-FXD 10PF +-5% 100VDC CER 0+-30	28480	0160-4791
A130C37	0160-4832	4		CAPACITOR-FXD .01UF +-10% 100VDC CER	28480	0160-4832
A130C38	0160-6561	0		CAPACITOR-FXD .1UF +-20% 50VDC CER	16299	CAC02Z5U104M050A
A130C39	0160-4832	4		CAPACITOR-FXD .01UF +-10% 100VDC CER	28480	0160-4832
A130C40	0160-4832	4		CAPACITOR-FXD .01UF +-10% 100VDC CER	28480	0160-4832
A130C41	0160-4822	2		CAPACITOR-FXD 1000PF +-5% 100VDC CER	28480	0160-4822
A130C42	0160-4822	2		CAPACITOR-FXD 1000PF +-5% 100VDC CER	28480	0160-4822
A130C43	0180-3363	6	8	CAPACITOR-FXD 22UF+-20% 25VDC AL	28480	0180-3363
A130C44	0180-3363	6		CAPACITOR-FXD 22UF+-20% 25VDC AL	28480	0180-3363
A130C45	0180-3363	6		CAPACITOR-FXD 22UF+-20% 25VDC AL	28480	0180-3363

*** Indicates factory selected value.**

Table 1. A130 Replaceable Parts (2 of 4)

Reference Designator	HP Part Number	C D	Qty.	Description	Mfr Code	Mfr Part Number
A130C46	0160-4822	2		CAPACITOR-FXD 1000PF +-5% 100VDC CER	28480	0160-4822
A130C47	0160-4822	2		CAPACITOR-FXD 1000PF +-5% 100VDC CER	28480	0160-4822
A130C48	0160-6561	0		CAPACITOR-FXD .1UF +-20% 50VDC CER	16299	CAC02Z5U104M050A
A130C49	0160-6561	0		CAPACITOR-FXD .1UF +-20% 50VDC CER	16299	CAC02Z5U104M050A
A130C50	0160-6561	0		CAPACITOR-FXD .1UF +-20% 50VDC CER	16299	CAC02Z5U104M050A
A130C51	0160-6561	0		CAPACITOR-FXD .1UF +-20% 50VDC CER	16299	CAC02Z5U104M050A
A130C52	0180-3363	6		CAPACITOR-FXD 22UF+-20% 25VDC AL	28480	0180-3363
A130C53	0180-3363	6		CAPACITOR-FXD 22UF+-20% 25VDC AL	28480	0180-3363
A130C54	0180-3363	6		CAPACITOR-FXD 22UF+-20% 25VDC AL	28480	0180-3363
A130C55	0180-3363	6		CAPACITOR-FXD 22UF+-20% 25VDC AL	28480	0180-3363
A130C56	0180-3363	6		CAPACITOR-FXD 22UF+-20% 25VDC AL	28480	0180-3363
A130C57	0160-2437	1		CAPACITOR-FDTHRU 5000PF +80 -20% 200V	28480	0160-2437
	2580-0006	8		NUT-HEX	28480	2580-0006
	9170-1397	0		BEAD INDUCTOR	28480	9170-1397
A130C58	0160-2437	1		CAPACITOR-FDTHRU 5000PF +80 -20% 200V	28480	0160-2437
	2580-0006	8		NUT-HEX	28480	2580-0006
	9170-1397	0		BEAD INDUCTOR	28480	9170-1397
A130C59	0160-2437	1		CAPACITOR-FDTHRU 5000PF +80 -20% 200V	28480	0160-2437
	2580-0006	8		NUT-HEX	28480	2580-0006
	9170-1397	0		BEAD INDUCTOR	28480	9170-1397
A130CR1	1901-0050	3	4	DIODE-SWITCHING 80V 200MA 2NS DO-35	9N171	1N4150
A130CR2	1901-0050	3		DIODE-SWITCHING 80V 200MA 2NS DO-35	9N171	1N4150
A130CR3	1901-0050	3		DIODE-SWITCHING 80V 200MA 2NS DO-35	9N171	1N4150
A130CR4	1901-0050	3		DIODE-SWITCHING 80V 200MA 2NS DO-35	9N171	1N4150
A130J1	1250-0257	1	4	CONNECTOR-RF SMB M PC 50-OHM	28480	1250-0257
A130J2	1250-0257	1		CONNECTOR-RF SMB M PC 50-OHM	28480	1250-0257
A130J3	1250-0257	1		CONNECTOR-RF SMB M PC 50-OHM	28480	1250-0257
A130J4	1250-0257	1		CONNECTOR-RF SMB M PC 50-OHM	28480	1250-0257
A130L1	9140-0158	6	6	INDUCTOR RF-CH-MLD 1UH 10%	28480	9140-0158
A130L2	9100-2249	6	2	INDUCTOR RF-CH-MLD 150NH 10%	28480	9100-2249
A130L3	9100-2251	0	3	INDUCTOR RF-CH-MLD 220NH 10%	28480	9100-2251
A130L4	9100-2249	6		INDUCTOR RF-CH-MLD 150NH 10%	28480	9100-2249
A130L5	9100-2251	0		INDUCTOR RF-CH-MLD 220NH 10%	28480	9100-2251
A130L6	9140-1302	4	2	COIL-VAR 54NH-79NH Q=80 PC-MTG	S4218	E502AN-3000013
A130L7	9140-1302	4		COIL-VAR 54NH-79NH Q=80 PC-MTG	S4218	E502AN-3000013
A130L8	9100-2251	0		INDUCTOR RF-CH-MLD 220NH 10%	28480	9100-2251
A130L9	9140-0158	6		INDUCTOR RF-CH-MLD 1UH 10%	28480	9140-0158
A130L10	9140-0114	4	2	INDUCTOR RF-CH-MLD 10UH 10%	28480	9140-0114
A130L11	9100-2259	8	1	INDUCTOR RF-CH-MLD 1.5UH 10%	28480	9100-2259
A130L12	9100-2247	4	2	INDUCTOR RF-CH-MLD 100NH 10%	28480	9100-2247
A130L13	9100-2247	4		INDUCTOR RF-CH-MLD 100NH 10%	28480	9100-2247
A130L14	9140-0114	4		INDUCTOR RF-CH-MLD 10UH 10%	28480	9140-0114
A130L15	9140-0158	6		INDUCTOR RF-CH-MLD 1UH 10%	28480	9140-0158
A130L16	9140-0158	6		INDUCTOR RF-CH-MLD 1UH 10%	28480	9140-0158
A130L17	9140-0158	6		INDUCTOR RF-CH-MLD 1UH 10%	28480	9140-0158
A130L18	9140-0158	6		INDUCTOR RF-CH-MLD 1UH 10%	28480	9140-0158
A130L19	9140-0210	1	1	INDUCTOR RF-CH-MLD 100UH 5%	28480	9140-0210
A130MP1	04195-00707		1	PLATE SHIELD		
A130Q1	1854-1073	1	3	TRANSISTOR NPN SI PD=600MW FT=6.5GHZ	28480	1854-1073
	9170-0029	3	3	CORE-SHIELDING BEAD	28480	9170-0029
A130Q2	1854-1073	1		TRANSISTOR NPN SI PD=600MW FT=6.5GHZ	28480	1854-1073
	9170-0029	3		CORE-SHIELDING BEAD	28480	9170-0029
A130Q3	1853-0459	3	1	TRANSISTOR PNP SI PD=625MW FT=200MHZ	28480	1853-0459
A130Q4	1854-0810	2	1	TRANSISTOR NPN SI PD=625MW FT=200MHZ	28480	1854-0810

*** Indicates factory selected value.**

Table 1. A130 Replaceable Parts (3 of 4)

Reference Designator	HP Part Number	C D	Qty.	Description	Mfr Code	Mfr Part Number
A130Q5	1854-1073	1	1	TRANSISTOR NPN SI PD=600MW FT=6.5GHZ	28480	1854-1073
	9170-0029	3		CORE-SHIELDING BEAD	28480	9170-0029
A130R1	2100-0568	1	1	RESISTOR-TRMR 100 10% C TOP-ADJ 1-TRN	28480	2100-0568
A130R2	2100-3383	4	1	RESISTOR-TRMR 50 10% C TOP-ADJ 1-TRN	28480	2100-3383
A130R3	0698-3432	7	4	RESISTOR 26.1 1% .125W F TC=0+-100	03888	PME55-1/8-T0-26R1-F
A130R4	0698-3432	7		RESISTOR 26.1 1% .125W F TC=0+-100	03888	PME55-1/8-T0-26R1-F
A130R5	0698-3438	3	5	RESISTOR 147 1% .125W F TC=0+-100	24546	CT4-1/8-T0-147R-F
A130R6	0698-3435	0	2	RESISTOR 38.3 1% .125W F TC=0+-100	28480	0698-3435
A130R7	0698-3438	3		RESISTOR 147 1% .125W F TC=0+-100	24546	CT4-1/8-T0-147R-F
A130R8	0757-0438	3	1	RESISTOR 5.11K 1% .125W F TC=0+-100	24546	CT4-1/8-T0-5111-F
A130R9	0698-3150	6	1	RESISTOR 2.37K 1% .125W F TC=0+-100	24546	CT4-1/8-T0-2371-F
A130R10	0698-0085	0	2	RESISTOR 2.61K 1% .125W F TC=0+-100	24546	CT4-1/8-T0-2611-F
A130R11	0698-3441	8	1	RESISTOR 215 1% .125W F TC=0+-100	24546	CT4-1/8-T0-215R-F
A130R12	0698-3438	3		RESISTOR 147 1% .125W F TC=0+-100	24546	CT4-1/8-T0-147R-F
A130R13	0698-3432	7		RESISTOR 26.1 1% .125W F TC=0+-100	03888	PME55-1/8-T0-26R1-F
A130R14	0698-3432	7		RESISTOR 26.1 1% .125W F TC=0+-100	03888	PME55-1/8-T0-26R1-F
A130R15	0757-0401	0	1	RESISTOR 100 1% .125W F TC=0+-100	24546	CT4-1/8-T0-101-F
A130R16	0757-0395	1	1	RESISTOR 56.2 1% .125W F TC=0+-100	24546	CT4-1/8-T0-56R2-F
A130R17	0757-0403	2	1	RESISTOR 121 1% .125W F TC=0+-100	24546	CT4-1/8-T0-121R-F
A130R18	0757-0280	3	5	RESISTOR 1K 1% .125W F TC=0+-100	24546	CT4-1/8-T0-1001-F
A130R19	0698-0082	7	6	RESISTOR 464 1% .125W F TC=0+-100	24546	CT4-1/8-T0-4640-F
A130R20	0698-4037	0	6	RESISTOR 46.4 1% .125W F TC=0+-100	28480	0698-4037
A130R21	0757-0394	0	2	RESISTOR 51.1 1% .125W F TC=0+-100	24546	CT4-1/8-T0-51R1-F
A130R22	0757-0277	8		RESISTOR 49.9 1% .125W F TC=0+-100	28480	0757-0277
A130R23	0757-0394	0		RESISTOR 51.1 1% .125W F TC=0+-100	24546	CT4-1/8-T0-51R1-F
A130R24	0698-0084	9	1	RESISTOR 2.15K 1% .125W F TC=0+-100	24546	CT4-1/8-T0-2151-F
A130R25	0698-0082	7		RESISTOR 464 1% .125W F TC=0+-100	24546	CT4-1/8-T0-4640-F
A130R26	0698-4037	0		RESISTOR 46.4 1% .125W F TC=0+-100	28480	0698-4037
A130R27	0698-3444	1	2	RESISTOR 316 1% .125W F TC=0+-100	24546	CT4-1/8-T0-316R-F
A130R28	0698-4037	0		RESISTOR 46.4 1% .125W F TC=0+-100	28480	0698-4037
A130R29	0698-4037	0		RESISTOR 46.4 1% .125W F TC=0+-100	28480	0698-4037
A130R30	0698-0085	0		RESISTOR 2.61K 1% .125W F TC=0+-100	24546	CT4-1/8-T0-2611-F
A130R31	0757-0280	3		RESISTOR 1K 1% .125W F TC=0+-100	24546	CT4-1/8-T0-1001-F
A130R32	0757-0280	3		RESISTOR 1K 1% .125W F TC=0+-100	24546	CT4-1/8-T0-1001-F
A130R33	0757-1094	9	1	RESISTOR 1.47K 1% .125W F TC=0+-100	24546	CT4-1/8-T0-1471-F
A130R34	0698-0082	7		RESISTOR 464 1% .125W F TC=0+-100	24546	CT4-1/8-T0-4640-F
A130R35	0698-0082	7		RESISTOR 464 1% .125W F TC=0+-100	24546	CT4-1/8-T0-4640-F
A130R36	0698-0082	7		RESISTOR 464 1% .125W F TC=0+-100	24546	CT4-1/8-T0-4640-F
A130R37	0757-0439	4	1	RESISTOR 6.81K 1% .125W F TC=0+-100	24546	CT4-1/8-T0-6811-F
A130R38	0757-0441	8	1	RESISTOR 8.25K 1% .125W F TC=0+-100	24546	CT4-1/8-T0-8251-F
A130R39	0698-3440	7	2	RESISTOR 196 1% .125W F TC=0+-100	24546	CT4-1/8-T0-196R-F
A130R40	0757-0424	7	1	RESISTOR 1.1K 1% .125W F TC=0+-100	24546	CT4-1/8-T0-1101-F
A130R41	0698-0082	7		RESISTOR 464 1% .125W F TC=0+-100	24546	CT4-1/8-T0-4640-F
A130R42	0757-0346	2	2	RESISTOR 10 1% .125W F TC=0+-100	28480	0757-0346
A130R43	0698-4037	0		RESISTOR 46.4 1% .125W F TC=0+-100	28480	0698-4037
A130R44	0698-4037	0		RESISTOR 46.4 1% .125W F TC=0+-100	28480	0698-4037
A130R45	0757-0416	7	1	RESISTOR 511 1% .125W F TC=0+-100	24546	CT4-1/8-T0-511R-F
A130R46	0698-3440	7		RESISTOR 196 1% .125W F TC=0+-100	24546	CT4-1/8-T0-196R-F
A130R47	0757-0397	3	1	RESISTOR 68.1 1% .125W F TC=0+-100	24546	CT4-1/8-T0-68R1-F
A130R48	0698-3438	3		RESISTOR 147 1% .125W F TC=0+-100	24546	CT4-1/8-T0-147R-F
A130R49	0698-3435	0		RESISTOR 38.3 1% .125W F TC=0+-100	28480	0698-3435
A130R50	0698-3438	3		RESISTOR 147 1% .125W F TC=0+-100	24546	CT4-1/8-T0-147R-F
A130R51	0757-0346	2		RESISTOR 10 1% .125W F TC=0+-100	28480	0757-0346
A130R52	0683-0475	1	1	RESISTOR 4.7 5% .25W CF TC=0-400	01121	CB47G5

*** Indicates factory selected value.**

Table 1. A130 Replaceable Parts (4 of 4)

Reference Designator	HP Part Number	C D	Qty.	Description	Mfr Code	Mfr Part Number
A130R53	2100-3212	8	1	RESISTOR-TRMR 200 10% C TOP-ADJ 1-TRN	28480	2100-3212
A130R54	0757-0458	7	1	RESISTOR 51.1K 1% .125W F TC=0+-100	24546	CT4-1/8-T0-5112-F
A130R55	0757-0280	3		RESISTOR 1K 1% .125W F TC=0+-100	24546	CT4-1/8-T0-1001-F
A130R56	0757-0440	7	1	RESISTOR 7.5K 1% .125W F TC=0+-100	24546	CT4-1/8-T0-7501-F
A130R57	0698-3155	1	1	RESISTOR 4.64K 1% .125W F TC=0+-100	24546	CT4-1/8-T0-4641-F
A130R58	0698-3444	1		RESISTOR 316 1% .125W F TC=0+-100	24546	CT4-1/8-T0-316R-F
A130RT1	0837-0035	6	1	THERMISTOR DISC 5K-OHM TC=-4.4%/C-DEG	28480	0837-0035
A130U1	????????					
A130U2	????????					
A130U3	1826-0476	7	1	IC SWITCH ANLG 8-DIP-P PKG	01295	TL601CP
A130U4	1820-0817	8	1	IC FF ECL D-M/S DUAL	04713	MC10131P
A130U5	1820-0821	4	1	IC CNTR ECL BIN UP/DOWN SYNCHRO	04713	MC10136L
A130U6	1826-0147	9	1	IC 7812 V RGLTR TO-220	04713	MC7812CP
A130U7	1826-1311	1	2	IC RF/IF AMPL WB 4-DIP-P PKG	28480	1826-1311
A130U8	1826-1311	1		IC RF/IF AMPL WB 4-DIP-P PKG	28480	1826-1311
A130U9	1826-0221	0	1	IC V RGLTR TO-220	04713	MC7912CT
A130U10	1826-0122	0	1	IC 7805 V RGLTR TO-220	07263	7805UC
A130W1	04195-61659	1	1	WIRE ASSEMBLY 8PIN	28480	04195-61659
	04195-00659		1	CASE SHIELD, COMPONENT SIDE		
	04195-00660		1	CASE SHIELD, CIRCUIT SIDE		

*** Indicates factory selected value.**

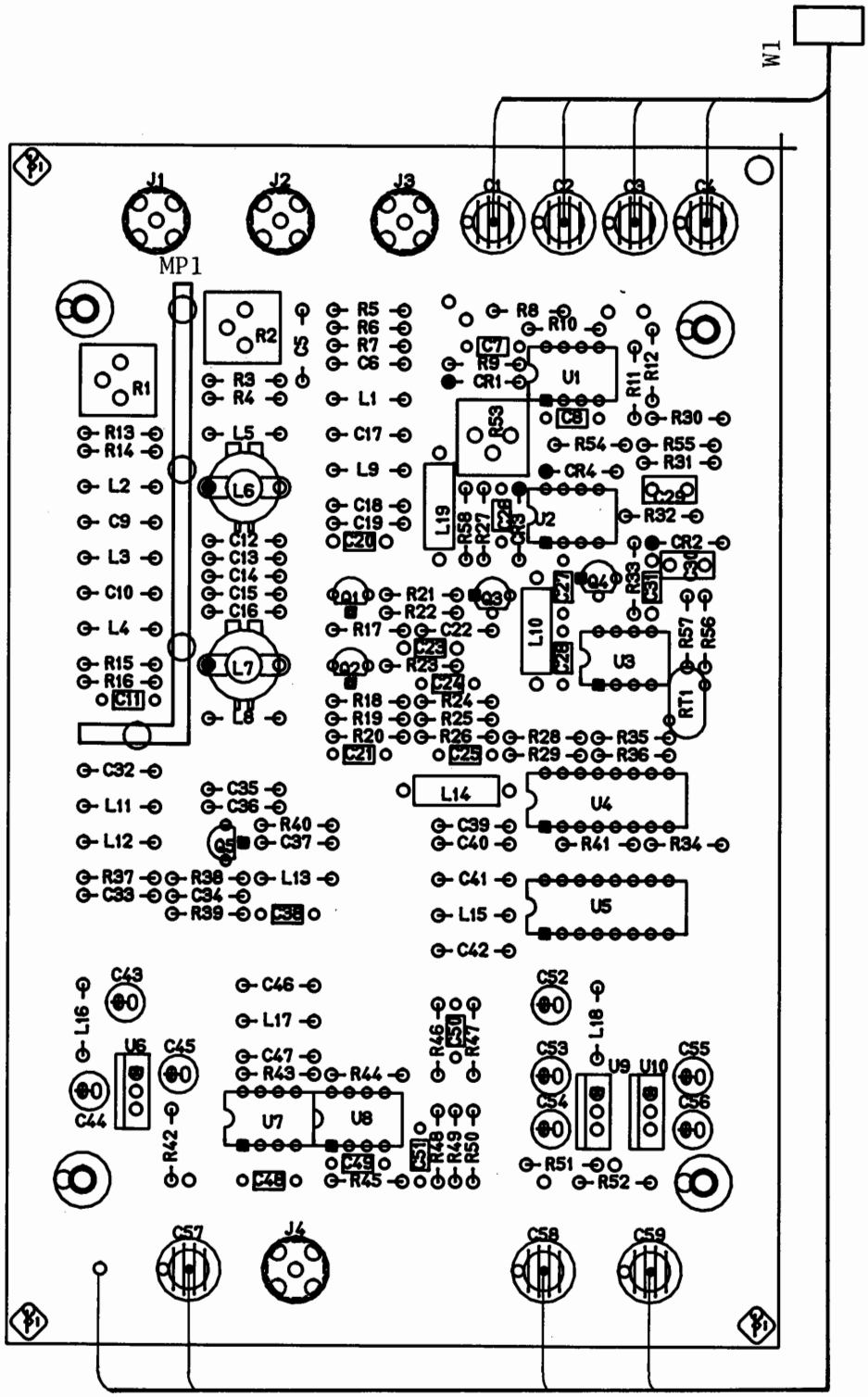

A130 Reference Frequency Converter Component Locations

A130 REFERENCE FREQUENCY CONVERTER

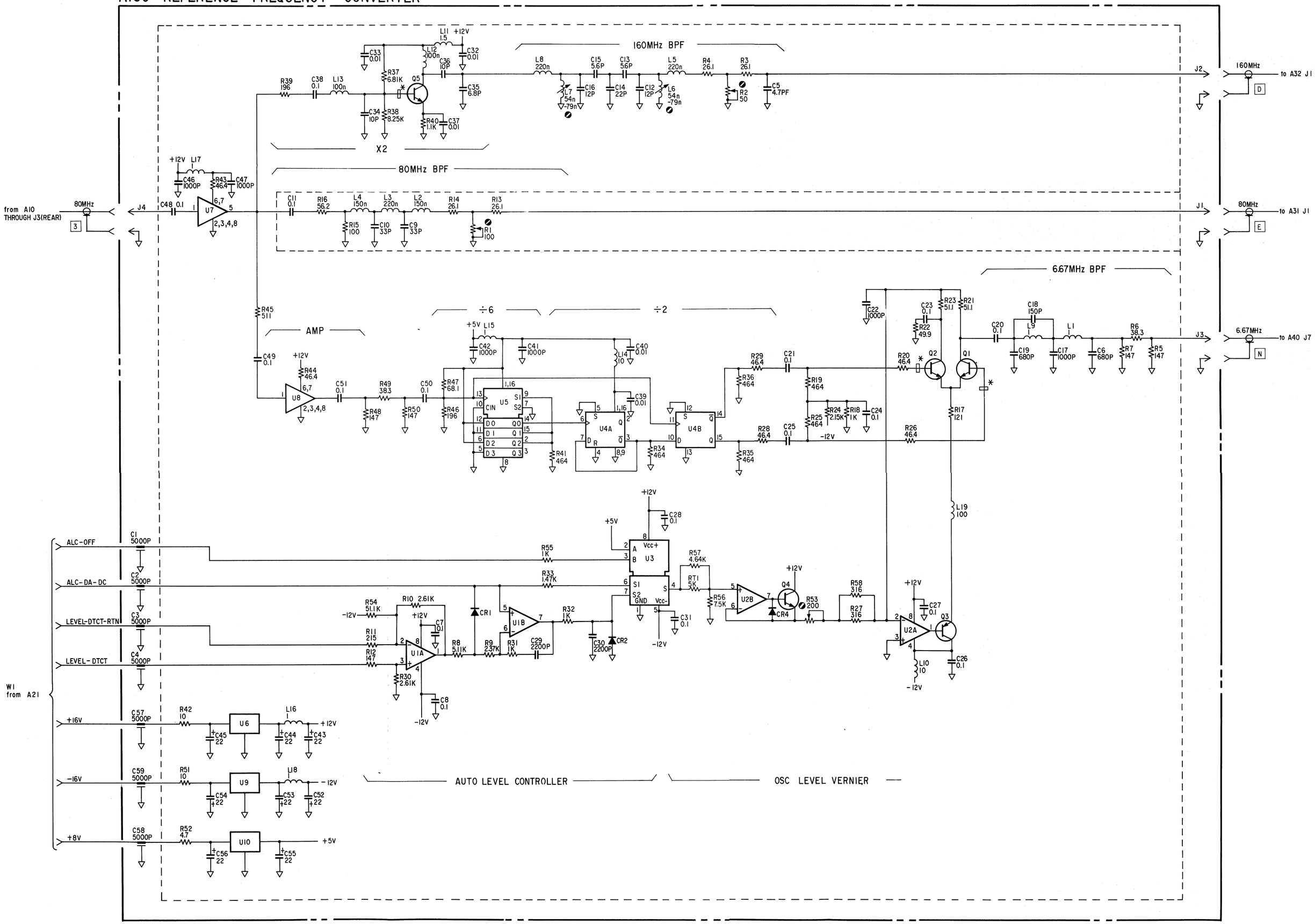

NOTES:

1. REFERENCE DESIGNATORS WITHIN THIS ASSEMBLY ARE ABBREVIATED. PREFIX ABBREVIATION WITH ASSEMBLY NUMBER FOR COMPLETE REFERENCE DESIGNATOR.

2. UNLESS OTHERWISE INDICATED:

   RESISTANCE IN OHMS (Ω)
   CAPACITANCE IN MICROFARADS (μF)
   INDUCTANCE IN MICROHENRIES (μH)

3. ADJUSTMENT NAMES

A130L6	160 MHz BPF ADJ
A130L7	160 MHz BPF ADJ
A130R1	80 MHz LEVEL ADJ
A130R2	160 MHz LEVEL ADJ
A130R53	6.6 MHz LEVEL ADJ

3RD IF LOCAL DRIVER AMPLIFIER SERVICE SHEET

The A31 third IF local driver amplifier assembly uses two separate amplifiers to amplify the reference frequency converter assembly's 80 MHz signal to drive the third IF converter mixers in the receiver, and to drive the signal source circuit.

CIRCUIT DESCRIPTION

R1, R2, and R3 form a 5 dB attenuator pad. C1, C2, C7 through C9, L1 and L2 form an 80 MHz bandpass filter. R4 and R11 split the input signal to feed the two amplifiers.

The two amplifiers are electrically identical. The amplifier circuit from R4 to J3 amplifies the 80 MHz signal and feeds it to the signal source circuit, and the amplifier circuit from R11 to J2 amplifies the 80 MHz signal and feeds it to the receiver circuit. These amplifiers are interchangeable for troubleshooting purposes. Since the amplifier sections are identical, only one will be explained in the following circuit description.

U1 amplifies the 80 MHz signal by 18 dB (voltage gain of 8). R6, R7, and R8 form a 1 dB attenuator pad. Q1 and associated components amplify the 80 MHz signal by 18 dB. R39, R40, and R41 form a 1 dB attenuator pad. Q3 and associated components amplify the 80 MHz signal by 12 dB (voltage gain of 4). C28 through C30 and L12 through L15 form a 100 MHz lowpass filter. R36, R37, and R38 form a 2 dB attenuator pad.

U3 is a +12 V voltage regulator.

TROUBLESHOOTING GUIDE

Examples of this board's input and output spectrum are shown below. The input and output signals are not affected by any of the HP 4195A's settings.

1. Input Signal Spectrum from Cable "E"

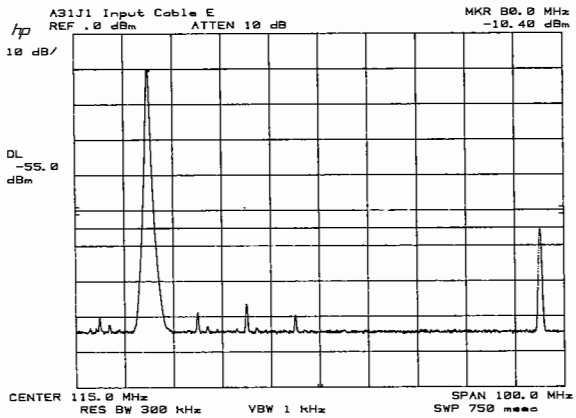

2. Output Signal Spectrum Observed at A31J2

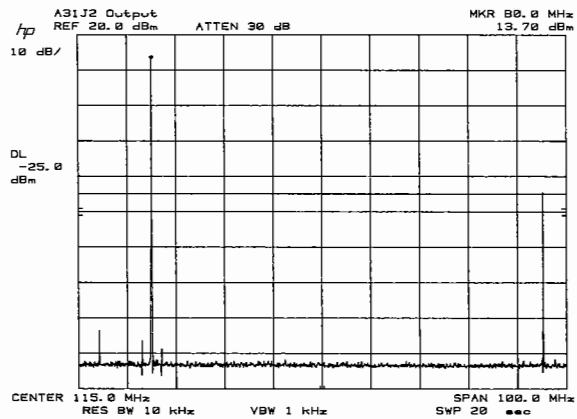

3. Output Signal Spectrum Observed at A31J3

The output signal spectrum observed ar A31J3 is almost same as that observed at A31J2.

Table 1. A31 Replaceable Parts (1 of 3)

Reference Designator	HP Part Number	C D	Qty.	Description	Mfr Code	Mfr Part Number
A31				3RD IF LOCAL DRIVER AMPLIFIER		
A31	04195-66531	8	1	3RD LOCAL AMP BD	28480	04195-66531
A31C1	0160-4814	2	2	CAPACITOR-FXD 150PF +-5% 100VDC CER	28480	0160-4814
A31C2	0160-4806	2	2	CAPACITOR-FXD 39PF +-5% 100VDC CER 0+-30	28480	0160-4806
A31C3	0160-4833	5	14	CAPACITOR-FXD .022UF +-10% 100VDC CER	28480	0160-4833
A31C4	0160-6561	0	11	CAPACITOR-FXD .1UF +-20% 50VDC CER	16299	CAC02Z5U104M050A
A31C5	0160-4832	4	6	CAPACITOR-FXD .01UF +-10% 100VDC CER	28480	0160-4832
A31C6	0160-4833	5		CAPACITOR-FXD .022UF +-10% 100VDC CER	28480	0160-4833
A31C7	0160-2239	1	1	CAPACITOR-FXD 1.8PF +-.25PF 500VDC CER	28480	0160-2239
A31C8	0160-4806	2		CAPACITOR-FXD 39PF +-5% 100VDC CER 0+-30	28480	0160-4806
A31C9	0160-4814	2		CAPACITOR-FXD 150PF +-5% 100VDC CER	28480	0160-4814
A31C10	0180-3363	6	3	CAPACITOR-FXD 22UF+-20% 25VDC AL	28480	0180-3363
A31C11	0160-6561	0		CAPACITOR-FXD .1UF +-20% 50VDC CER	16299	CAC02Z5U104M050A
A31C12	0160-4833	5		CAPACITOR-FXD .022UF +-10% 100VDC CER	28480	0160-4833
A31C13	0180-3363	6		CAPACITOR-FXD 22UF+-20% 25VDC AL	28480	0180-3363
A31C14	0160-6561	0		CAPACITOR-FXD .1UF +-20% 50VDC CER	16299	CAC02Z5U104M050A
A31C15	0160-4832	4		CAPACITOR-FXD .01UF +-10% 100VDC CER	28480	0160-4832
A31C16	0160-4833	5		CAPACITOR-FXD .022UF +-10% 100VDC CER	28480	0160-4833
A31C17	0160-2437	1	1	CAPACITOR-FDTHRU 5000PF +80 -20% 200V	28480	0160-2437
	2580-0006	8	1	NUT-HEX	28480	2580-0006
	9170-1397	0	1	BEAD INDUCTOR	28480	9170-1397
A31C18	0180-3363	6		CAPACITOR-FXD 22UF+-20% 25VDC AL	28480	0180-3363
A31C19	0160-6561	0		CAPACITOR-FXD .1UF +-20% 50VDC CER	16299	CAC02Z5U104M050A
A31C20	0160-4833	5		CAPACITOR-FXD .022UF +-10% 100VDC CER	28480	0160-4833
A31C21	0160-6561	0		CAPACITOR-FXD .1UF +-20% 50VDC CER	16299	CAC02Z5U104M050A
A31C22	0160-6561	0		CAPACITOR-FXD .1UF +-20% 50VDC CER	16299	CAC02Z5U104M050A
A31C23	0160-4832	4		CAPACITOR-FXD .01UF +-10% 100VDC CER	28480	0160-4832
A31C24	0160-4833	5		CAPACITOR-FXD .022UF +-10% 100VDC CER	28480	0160-4833
A31C25	0160-6561	0		CAPACITOR-FXD .1UF +-20% 50VDC CER	16299	CAC02Z5U104M050A
A31C26	0160-4832	4		CAPACITOR-FXD .01UF +-10% 100VDC CER	28480	0160-4832
A31C27	0160-4833	5		CAPACITOR-FXD .022UF +-10% 100VDC CER	28480	0160-4833
A31C28	0160-4786	7	4	CAPACITOR-FXD 27PF +-5% 100VDC CER 0+-30	28480	0160-4786
A31C29	0160-4804	0	2	CAPACITOR-FXD 56PF +-5% 100VDC CER 0+-30	28480	0160-4804
A31C30	0160-4786	7		CAPACITOR-FXD 27PF +-5% 100VDC CER 0+-30	28480	0160-4786
A31C31	0160-4832	4		CAPACITOR-FXD .01UF +-10% 100VDC CER	28480	0160-4832
A31C32	0160-6561	0		CAPACITOR-FXD .1UF +-20% 50VDC CER	16299	CAC02Z5U104M050A
A31C33	0160-6561	0		CAPACITOR-FXD .1UF +-20% 50VDC CER	16299	CAC02Z5U104M050A
A31C34	0160-4833	5		CAPACITOR-FXD .022UF +-10% 100VDC CER	28480	0160-4833
A31C35	0160-4833	5		CAPACITOR-FXD .022UF +-10% 100VDC CER	28480	0160-4833
A31C36	0160-4833	5		CAPACITOR-FXD .022UF +-10% 100VDC CER	28480	0160-4833
A31C37	0160-6561	0		CAPACITOR-FXD .1UF +-20% 50VDC CER	16299	CAC02Z5U104M050A
A31C38	0160-4832	4		CAPACITOR-FXD .01UF +-10% 100VDC CER	28480	0160-4832
A31C39	0160-6561	0		CAPACITOR-FXD .1UF +-20% 50VDC CER	16299	CAC02Z5U104M050A
A31C40	0160-4833	5		CAPACITOR-FXD .022UF +-10% 100VDC CER	28480	0160-4833
A31C41	0160-4833	5		CAPACITOR-FXD .022UF +-10% 100VDC CER	28480	0160-4833
A31C42	0160-4833	5		CAPACITOR-FXD .022UF +-10% 100VDC CER	28480	0160-4833
A31C43	0160-4833	5		CAPACITOR-FXD .022UF +-10% 100VDC CER	28480	0160-4833
A31C44	0160-4786	7		CAPACITOR-FXD 27PF +-5% 100VDC CER 0+-30	28480	0160-4786
A31C45	0160-4804	0		CAPACITOR-FXD 56PF +-5% 100VDC CER 0+-30	28480	0160-4804
A31C46	0160-4786	7		CAPACITOR-FXD 27PF +-5% 100VDC CER 0+-30	28480	0160-4786
A31CR1	1902-3122	8	1	DIODE-ZNR 6.65V 2% DO-35 PD=.4W	28480	1902-3122

*** Indicates factory selected value.**

Table 1. A31 Replaceable Parts (2 of 3)

Reference Designator	HP Part Number	C D	Qty.	Description	Mfr Code	Mfr Part Number
A31J1	1250-0257	1	2	CONNECTOR-RF SMB M PC 50-OHM	28480	1250-0257
A31J2	1250-0835	1	1	CONNECTOR-RF SMC M PC 50-OHM	28480	1250-0835
A31J3	1250-0257	1		CONNECTOR-RF SMB M PC 50-OHM	28480	1250-0257
A31L1	9140-0308	8	2	INDUCTOR RF-CH-MLD 120NH 5%	28480	9140-0308
A31L2	9140-0308	8		INDUCTOR RF-CH-MLD 120NH 5%	28480	9140-0308
A31L3	9140-0114	4	8	INDUCTOR RF-CH-MLD 10UH 10%	28480	9140-0114
A31L4	9100-3551	5	1	INDUCTOR RF-CH-MLD 1UH 5%	28480	9100-3551
A31L5	9140-0114	4		INDUCTOR RF-CH-MLD 10UH 10%	28480	9140-0114
A31L6	9140-0114	4		INDUCTOR RF-CH-MLD 10UH 10%	28480	9140-0114
A31L7	9100-2247	4	2	INDUCTOR RF-CH-MLD 100NH 10%	28480	9100-2247
A31L8	9140-0114	4		INDUCTOR RF-CH-MLD 10UH 10%	28480	9140-0114
A31L9	9140-0114	4		INDUCTOR RF-CH-MLD 10UH 10%	28480	9140-0114
A31L10	9100-2247	4		INDUCTOR RF-CH-MLD 100NH 10%	28480	9100-2247
A31L11	9140-0114	4		INDUCTOR RF-CH-MLD 10UH 10%	28480	9140-0114
A31L12	9100-2251	0	8	INDUCTOR RF-CH-MLD 220NH 10%	28480	9100-2251
A31L13	9100-2251	0		INDUCTOR RF-CH-MLD 220NH 10%	28480	9100-2251
A31L14	9100-2251	0		INDUCTOR RF-CH-MLD 220NH 10%	28480	9100-2251
A31L15	9100-2251	0		INDUCTOR RF-CH-MLD 220NH 10%	28480	9100-2251
A31L16	9140-0114	4		INDUCTOR RF-CH-MLD 10UH 10%	28480	9140-0114
A31L17	9140-0114	4		INDUCTOR RF-CH-MLD 10UH 10%	28480	9140-0114
A31L18	9100-2251	0		INDUCTOR RF-CH-MLD 220NH 10%	28480	9100-2251
A31L19	9100-2251	0		INDUCTOR RF-CH-MLD 220NH 10%	28480	9100-2251
A31L20	9100-2251	0		INDUCTOR RF-CH-MLD 220NH 10%	28480	9100-2251
A31L21	9100-2251	0		INDUCTOR RF-CH-MLD 220NH 10%	28480	9100-2251
A31MP1	04195-00675		1	PLATE SHIELD		
A31Q1	1854-1073	1	4	TRANSISTOR NPN SI PD=600MW FT=6.5GHZ	28480	1854-1073
A31Q2	1854-1073	1		TRANSISTOR NPN SI PD=600MW FT=6.5GHZ	28480	1854-1073
A31Q3	1854-1073	1		TRANSISTOR NPN SI PD=600MW FT=6.5GHZ	28480	1854-1073
	9170-0029	3	2	CORE-SHIELDING BEAD	28480	9170-0029
A31Q4	1854-1073	1		TRANSISTOR NPN SI PD=600MW FT=6.5GHZ	28480	1854-1073
	9170-0029	3		CORE-SHIELDING BEAD	28480	9170-0029
A31R1	0698-3132	4	4	RESISTOR 261 1% .125W F TC=0+-100	24546	CT4-1/8-T0-2610-F
A31R2	0698-3430	5	1	RESISTOR 21.5 1% .125W F TC=0+-100	03888	PME55-1/8-T0-21R5-F
A31R3	0698-3132	4		RESISTOR 261 1% .125W F TC=0+-100	24546	CT4-1/8-T0-2610-F
A31R4	0757-0397	3	2	RESISTOR 68.1 1% .125W F TC=0+-100	24546	CT4-1/8-T0-68R1-F
A31R5	0757-0401	0	2	RESISTOR 100 1% .125W F TC=0+-100	24546	CT4-1/8-T0-101-F
A31R6	0698-3495	2	9	RESISTOR 866 1% .125W F TC=0+-100	24546	CT4-1/8-T0-866R-F
A31R7	0683-0565	0	4	RESISTOR 5.6 5% .25W CF TC=0-400	01121	CB56G5
A31R8	0698-3495	2		RESISTOR 866 1% .125W F TC=0+-100	24546	CT4-1/8-T0-866R-F
A31R9	0698-3441	8	5	RESISTOR 215 1% .125W F TC=0+-100	24546	CT4-1/8-T0-215R-F
A31R10	0698-3439	4	3	RESISTOR 178 1% .125W F TC=0+-100	24546	CT4-1/8-T0-178R-F
A31R11	0757-0397	3		RESISTOR 68.1 1% .125W F TC=0+-100	24546	CT4-1/8-T0-68R1-F
A31R12	0757-0401	0		RESISTOR 100 1% .125W F TC=0+-100	24546	CT4-1/8-T0-101-F
A31R13	0757-3132	2	2	RESISTOR 10 1% .125W F TC=0+-100	28480	0757-0346
A31R14	0757-3132	2		RESISTOR 10 1% .125W F TC=0+-100	28480	0757-0346
A31R15	0698-3495	2		RESISTOR 866 1% .125W F TC=0+-100	24546	CT4-1/8-T0-866R-F
A31R16	0683-0565	0		RESISTOR 5.6 5% .25W CF TC=0-400	01121	CB56G5
A31R17	0698-3495	2		RESISTOR 866 1% .125W F TC=0+-100	24546	CT4-1/8-T0-866R-F
A31R18	0698-3132	4		RESISTOR 261 1% .125W F TC=0+-100	24546	CT4-1/8-T0-2610-F
A31R19	0757-0295	0	8	RESISTOR 11.5 1% .125W F TC=0+-100	19701	5033R-1/8-T0-11R5-F
A31R20	0757-0295	0		RESISTOR 11.5 1% .125W F TC=0+-100	19701	5033R-1/8-T0-11R5-F
A31R21	0757-0295	0		RESISTOR 11.5 1% .125W F TC=0+-100	19701	5033R-1/8-T0-11R5-F
A31R22	0698-4418	1	4	RESISTOR 205 1% .125W F TC=0+-100	24546	CT4-1/8-T0-205R-F

*** Indicates factory selected value.**

Table 1. A31 Replaceable Parts (3 of 3)

Reference Designator	HP Part Number	C D	Qty.	Description	Mfr Code	Mfr Part Number
A31R23	0698-3495	2		RESISTOR 866 1% .125W F TC=0+-100	24546	CT4-1/8-T0-866R-F
A31R24	0698-3132	4		RESISTOR 261 1% .125W F TC=0+-100	24546	CT4-1/8-T0-2610-F
A31R25	0757-0295	0		RESISTOR 11.5 1% .125W F TC=0+-100	19701	5033R-1/8-T0-11R5-F
A31R26	0757-0295	0		RESISTOR 11.5 1% .125W F TC=0+-100	19701	5033R-1/8-T0-11R5-F
A31R27	0757-0295	0		RESISTOR 11.5 1% .125W F TC=0+-100	19701	5033R-1/8-T0-11R5-F
A31R28	0698-4418	1		RESISTOR 205 1% .125W F TC=0+-100	24546	CT4-1/8-T0-205R-F
A31R29	0698-3495	2		RESISTOR 866 1% .125W F TC=0+-100	24546	CT4-1/8-T0-866R-F
A31R30	0698-3441	8		RESISTOR 215 1% .125W F TC=0+-100	24546	CT4-1/8-T0-215R-F
A31R31	0698-3439	4		RESISTOR 178 1% .125W F TC=0+-100	24546	CT4-1/8-T0-178R-F
A31R32	0698-3441	8		RESISTOR 215 1% .125W F TC=0+-100	24546	CT4-1/8-T0-215R-F
A31R33	0698-3430	5	2	RESISTOR 21.5 1% .125W F TC=0+-100	03888	PME55-1/8-T0-21R5-F
A31R34	0698-3432	7	4	RESISTOR 26.1 1% .125W F TC=0+-100	03888	PME55-1/8-T0-26R1-F
A31R35	0698-3432	7		RESISTOR 26.1 1% .125W F TC=0+-100	03888	PME55-1/8-T0-26R1-F
A31R36	0698-3488	3	4	RESISTOR 442 1% .125W F TC=0+-100	24546	CT4-1/8-T0-422R-F
A31R37	0757-0295	0		RESISTOR 11.5 1% .125W F TC=0+-100	19701	5033R-1/8-T0-11R5-F
A31R38	0698-3488	3		RESISTOR 442 1% .125W F TC=0+-100	24546	CT4-1/8-T0-422R-F
A31R39	0698-3495	2		RESISTOR 866 1% .125W F TC=0+-100	24546	CT4-1/8-T0-866R-F
A31R40	0683-0565	0		RESISTOR 5.6 5% .25W CF TC=0-400	01121	CB56G5
A31R41	0698-3495	2		RESISTOR 866 1% .125W F TC=0+-100	24546	CT4-1/8-T0-866R-F
A31R42	0698-4418	1		RESISTOR 205 1% .125W F TC=0+-100	24546	CT4-1/8-T0-205R-F
A31R43	0757-0421	4	2	RESISTOR 825 1% .125W F TC=0+-100	24546	CT4-1/8-T0-825R-F
A31R44	0757-0411	2	2	RESISTOR 332 1% .125W F TC=0+-100	24546	CT4-1/8-T0-332R-F
A31R45	0698-3441	8		RESISTOR 215 1% .125W F TC=0+-100	24546	CT4-1/8-T0-215R-F
A31R46	0698-3439	4		RESISTOR 178 1% .125W F TC=0+-100	24546	CT4-1/8-T0-178R-F
A31R47	0757-0411	2		RESISTOR 332 1% .125W F TC=0+-100	24546	CT4-1/8-T0-332R-F
A31R48	0698-3430	5		RESISTOR 21.5 1% .125W F TC=0+-100	03888	PME55-1/8-T0-21R5-F
A31R49	0698-3432	7		RESISTOR 26.1 1% .125W F TC=0+-100	03888	PME55-1/8-T0-26R1-F
A31R50	0698-3432	7		RESISTOR 26.1 1% .125W F TC=0+-100	03888	PME55-1/8-T0-26R1-F
A31R51	0698-3441	8		RESISTOR 215 1% .125W F TC=0+-100	24546	CT4-1/8-T0-215R-F
A31R52	0757-0421	4		RESISTOR 825 1% .125W F TC=0+-100	24546	CT4-1/8-T0-825R-F
A31R53	0698-4418	1		RESISTOR 205 1% .125W F TC=0+-100	24546	CT4-1/8-T0-205R-F
A31R54	0698-3495	2		RESISTOR 866 1% .125W F TC=0+-100	24546	CT4-1/8-T0-866R-F
A31R55	0683-0565	0		RESISTOR 5.6 5% .25W CF TC=0-400	01121	CB56G5
A31R56	0698-3495	2		RESISTOR 866 1% .125W F TC=0+-100	24546	CT4-1/8-T0-866R-F
A31R57	0698-3488	3		RESISTOR 442 1% .125W F TC=0+-100	24546	CT4-1/8-T0-422R-F
A31R58	0698-3488	3		RESISTOR 442 1% .125W F TC=0+-100	24546	CT4-1/8-T0-422R-F
A31R59	0757-0295	0		RESISTOR 11.5 1% .125W F TC=0+-100	19701	5033R-1/8-T0-11R5-F
A31U1	1826-1310	0	2	IC RF/IF AMPL WB 4-DIP-P PKG	28480	1826-1310
A31U2	1826-1310	0		IC RF/IF AMPL WB 4-DIP-P PKG	28480	1826-1310
A31U3	1826-0147	9	1	IC 7812 V RGLTR TO-220	04713	MC7812CP
A31W1	8159-0005	0	2	RESISTOR-ZERO OHMS 22 AWG LEAD DIA	28480	8159-0005
A31W2	8159-0005	0		RESISTOR-ZERO OHMS 22 AWG LEAD DIA	28480	8159-0005
A31W3	04195-61660	4	1	WIRE ASSEMBLY 3PIN	28480	04195-61660
	9170-0029	3	2	CORE-SHIELDING BEAD	28480	9170-0029
	04195-00693		1	CASE SHIELD, COMPONENT SIDE		
	04195-00694		1	CASE SHIELD, CIRCUIT SIDE		

*** Indicates factory selected value.**

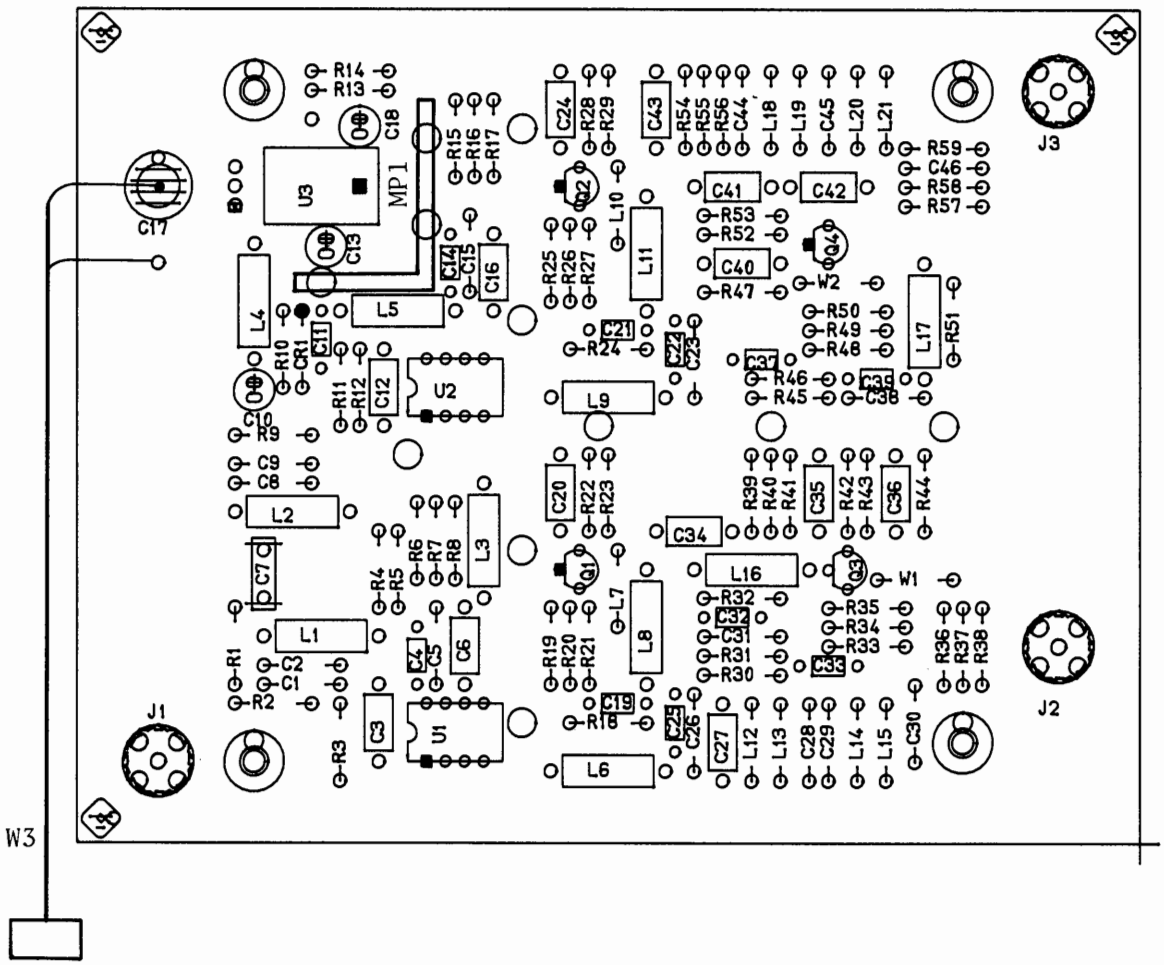

Figure 1. A31 3rd IF Local Driver Amplifier Component Locations

A31 3RD IF LOCAL DRIVER AMPLIFIER

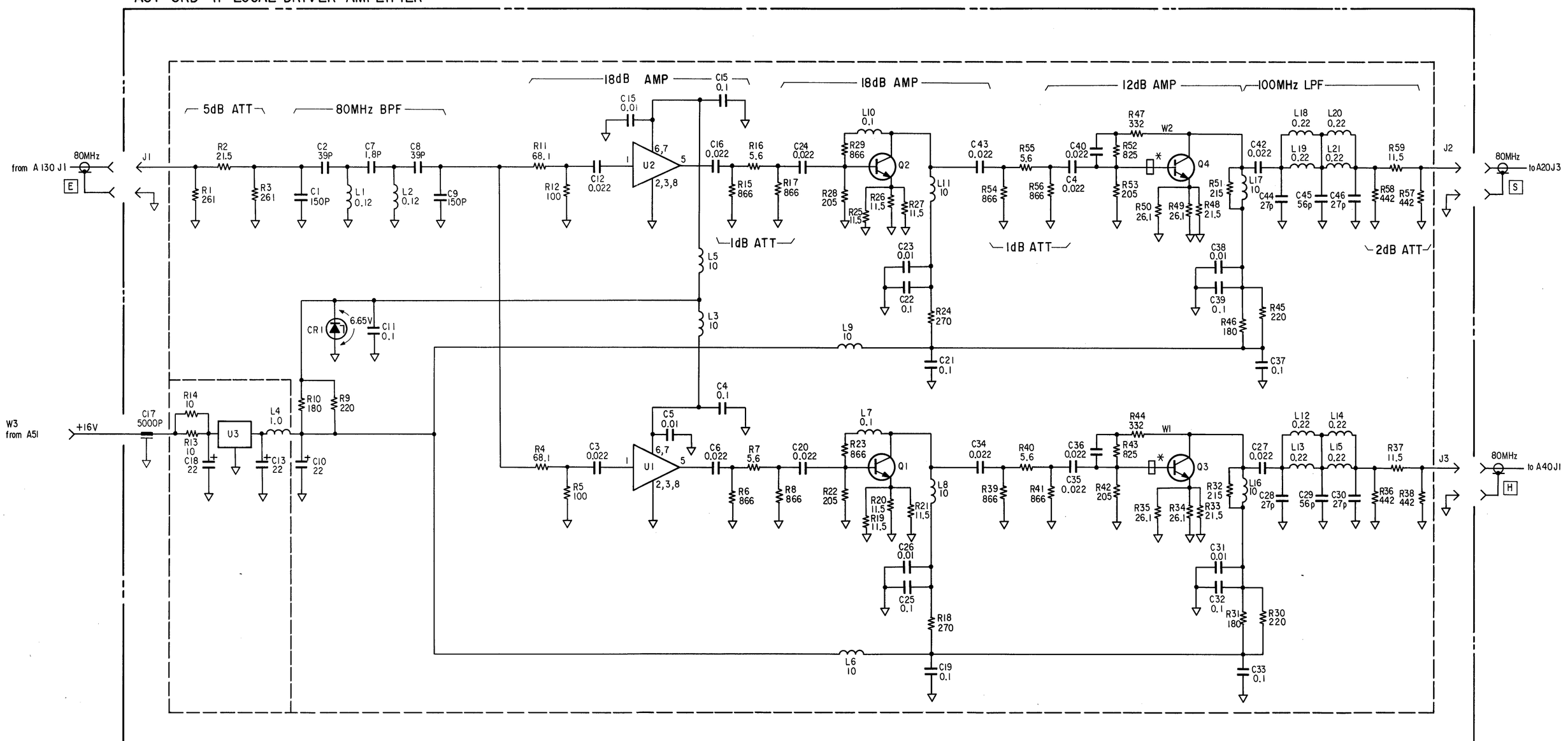

2ND IF LOCAL DRIVER AMPLIFIER SERVICE SHEET

The A32 second IF local driver amplifier assembly uses two separate amplifier circuits to amplify the 160 MHz signal from the reference frequency converter assembly, to drive the second IF converter mixers in the receiver and signal source circuits.

CIRCUIT DESCRIPTION

R1, R2, and R3 form a 3 dB attenuator pad. C1, C2, C7 through C9, L1 and L2 form a 160 MHz bandpass filter. R4 and R11 split the input signal to feed the two amplifier circuits.

The two amplifier circuits are electrically identical. The amplifier circuit from R4 to J1 is used to drive the signal source circuit, and the amplifier circuit from R11 to J3 is used to drive the receiver circuit. These amplifier circuits are interchangeable for troubleshooting purposes. Since the amplifier sections are identical, only one will be explained in the following circuit description.

U1 amplifies the 160 MHz signal by 18 dB (voltage gain of 8). R6, R7, and R8 form a 2 dB attenuator pad. Q1 and its associated components amplify the 160 MHz signal by 18 dB. C31 and C32 and L16 form a 200 MHz lowpass filter. R33, R34, and R35 form a 2 dB attenuator pad. Q3 and its associated components amplify the 160 MHz signal by 12 dB. C23 through C25 and L7 through L10 form a 200 MHz lowpass filter. R28, R29, and R30 form a 2 dB attenuator pad.

U3 is a +12 V voltage regulator.

TROUBLESHOOTING GUIDE

Examples of the 160 MHz signal's input and output spectrum are shown below. The input and output signals are not affected by any of the HP 4195A settings.

1. Input Signal Spectrum from Cable "D"

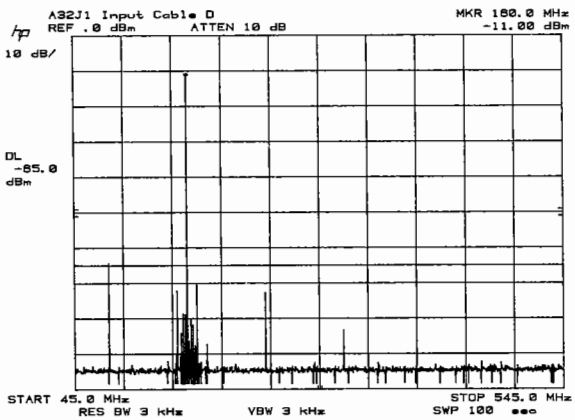

2. Output Signal Spectrum Observed at A32J2

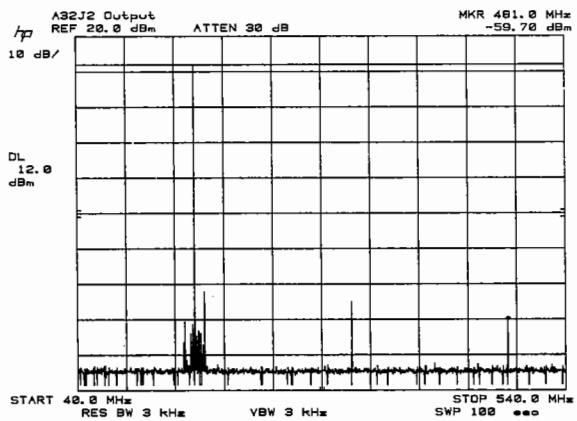

3. Output Signal Spectrum Observed at A32J3

The output signal spectrum observed ar A32J3 is almost same as that observed at A32J2.

Table 1. A32 Replaceable Parts (1 of 3)

Reference Designator	HP Part Number	C D	Qty.	Description	Mfr Code	Mfr Part Number
A32				2ND IF LOCAL DRIVER AMPLIFIER		
A32	04195-66532	9	1	2ND LOCAL AMP BD	28480	04195-66532
A32C1	0160-4805	1	2	CAPACITOR-FXD 47PF +-5% 100VDC CER 0+-30	28480	0160-4805
A32C2	0160-4786	7	4	CAPACITOR-FXD 27PF +-5% 100VDC CER 0+-30	28480	0160-4786
A32C3	0160-4832	4	20	CAPACITOR-FXD .01UF +-10% 100VDC CER	28480	0160-4832
A32C4	0160-6561	0	11	CAPACITOR-FXD .1UF +-20% 50VDC CER	16299	CAC02Z5U104M050A
A32C5	0160-4832	4		CAPACITOR-FXD .01UF +-10% 100VDC CER	28480	0160-4832
A32C6	0160-4832	4		CAPACITOR-FXD .01UF +-10% 100VDC CER	28480	0160-4832
A32C7	0160-4798	1	1	CAPACITOR-FXD 2.7PF +-.25PF 100VDC CER	28480	0160-4798
A32C8	0160-4786	7		CAPACITOR-FXD 27PF +-5% 100VDC CER 0+-30	28480	0160-4786
A32C9	0160-4805	1		CAPACITOR-FXD 47PF +-5% 100VDC CER 0+-30	28480	0160-4805
A32C10	0180-3363	6	3	CAPACITOR-FXD 22UF+-20% 25VDC AL	28480	0180-3363
A32C11	0160-6561	0		CAPACITOR-FXD .1UF +-20% 50VDC CER	16299	CAC02Z5U104M050A
A32C12	0160-4832	4		CAPACITOR-FXD .01UF +-10% 100VDC CER	28480	0160-4832
A32C13	0180-3363	6		CAPACITOR-FXD 22UF+-20% 25VDC AL	28480	0180-3363
A32C14	0160-6561	0		CAPACITOR-FXD .1UF +-20% 50VDC CER	16299	CAC02Z5U104M050A
A32C15	0160-4832	4		CAPACITOR-FXD .01UF +-10% 100VDC CER	28480	0160-4832
A32C16	0160-4832	4		CAPACITOR-FXD .01UF +-10% 100VDC CER	28480	0160-4832
A32C17	0160-2437	1	1	CAPACITOR-FDTHRU 5000PF +80 -20% 200V	28480	0160-2437
	2580-0006	8	1	NUT-HEX	28480	2580-0006
	9170-1397	0	1	BEAD INDUCTOR	28480	9170-1397
A32C18	0180-3363	6		CAPACITOR-FXD 22UF+-20% 25VDC AL	28480	0180-3363
A32C19	0160-6561	0		CAPACITOR-FXD .1UF +-20% 50VDC CER	16299	CAC02Z5U104M050A
A32C20	0160-6561	0		CAPACITOR-FXD .1UF +-20% 50VDC CER	16299	CAC02Z5U104M050A
A32C21	0160-4832	4		CAPACITOR-FXD .01UF +-10% 100VDC CER	28480	0160-4832
A32C22	0160-4832	4		CAPACITOR-FXD .01UF +-10% 100VDC CER	28480	0160-4832
A32C23	0160-4790	3	2	CAPACITOR-FXD 12PF +-5% 100VDC CER 0+-30	28480	0160-4790
A32C24	0160-4786	7		CAPACITOR-FXD 27PF +-5% 100VDC CER 0+-30	28480	0160-4786
A32C25	0160-4789	0	2	CAPACITOR-FXD 15PF +-5% 100VDC CER 0+-30	28480	0160-4789
A32C26	0160-4832	4		CAPACITOR-FXD .01UF +-10% 100VDC CER	28480	0160-4832
A32C27	0160-6561	0		CAPACITOR-FXD .1UF +-20% 50VDC CER	16299	CAC02Z5U104M050A
A32C28	0160-6561	0		CAPACITOR-FXD .1UF +-20% 50VDC CER	16299	CAC02Z5U104M050A
A32C29	0160-4832	4		CAPACITOR-FXD .01UF +-10% 100VDC CER	28480	0160-4832
A32C30	0160-4832	4		CAPACITOR-FXD .01UF +-10% 100VDC CER	28480	0160-4832
A32C31	0160-4788	9	4	CAPACITOR-FXD 18PF +-5% 100VDC CER 0+-30	28480	0160-4788
A32C32	0160-4788	9		CAPACITOR-FXD 18PF +-5% 100VDC CER 0+-30	28480	0160-4788
A32C33	0160-4832	4		CAPACITOR-FXD .01UF +-10% 100VDC CER	28480	0160-4832
A32C34	0160-4832	4		CAPACITOR-FXD .01UF +-10% 100VDC CER	28480	0160-4832
A32C35	0160-6561	0		CAPACITOR-FXD .1UF +-20% 50VDC CER	16299	CAC02Z5U104M050A
A32C36	0160-4832	4		CAPACITOR-FXD .01UF +-10% 100VDC CER	28480	0160-4832
A32C37	0160-6561	0		CAPACITOR-FXD .1UF +-20% 50VDC CER	16299	CAC02Z5U104M050A
A32C38	0160-4832	4		CAPACITOR-FXD .01UF +-10% 100VDC CER	28480	0160-4832
A32C39	0160-4832	4		CAPACITOR-FXD .01UF +-10% 100VDC CER	28480	0160-4832
A32C40	0160-6561	0		CAPACITOR-FXD .1UF +-20% 50VDC CER	16299	CAC02Z5U104M050A
A32C41	0160-6561	0		CAPACITOR-FXD .1UF +-20% 50VDC CER	16299	CAC02Z5U104M050A
A32C42	0160-4832	4		CAPACITOR-FXD .01UF +-10% 100VDC CER	28480	0160-4832
A32C43	0160-4789	0		CAPACITOR-FXD 15PF +-5% 100VDC CER 0+-30	28480	0160-4789
A32C44	0160-4832	4		CAPACITOR-FXD .01UF +-10% 100VDC CER	28480	0160-4832
A32C45	0160-4832	4		CAPACITOR-FXD .01UF +-10% 100VDC CER	28480	0160-4832
A32C46	0160-4788	9		CAPACITOR-FXD 18PF +-5% 100VDC CER 0+-30	28480	0160-4788
A32C47	0160-4788	9		CAPACITOR-FXD 18PF +-5% 100VDC CER 0+-30	28480	0160-4788
A32C48	0160-4832	4		CAPACITOR-FXD .01UF +-10% 100VDC CER	28480	0160-4832
A32C49	0160-4790	3		CAPACITOR-FXD 12PF +-5% 100VDC CER 0+-30	28480	0160-4790
A32C50	0160-4786	7		CAPACITOR-FXD 27PF +-5% 100VDC CER 0+-30	28480	0160-4786

*** Indicates factory selected value.**

Table 1. A32 Replaceable Parts (2 of 3)

Reference Designator	HP Part Number	C D	Qty.	Description	Mfr Code	Mfr Part Number
A32CR1	1902-3122	8	1	DIODE-ZNR 6.65V 2% DO-35 PD=.4W	28480	1902-3122
A32J1	1250-0257	1	3	CONNECTOR-RF SMB M PC 50-OHM	28480	1250-0257
A32J2	1250-0835	1	1	CONNECTOR-RF SMC M PC 50-OHM	28480	1250-0835
A32J3	1250-0257	1		CONNECTOR-RF SMB M PC 50-OHM	28480	1250-0257
A32L1	9100-2891	4	4	INDUCTOR RF-CH-MLD 50NH 10%	28480	9100-2891
A32L2	9100-2891	4		INDUCTOR RF-CH-MLD 50NH 10%	28480	9100-2891
A32L3	9140-0114	4	8	INDUCTOR RF-CH-MLD 10UH 10%	28480	9140-0114
A32L4	9100-3551	5	1	INDUCTOR RF-CH-MLD 1UH 5%	28480	9100-3551
A32L5	9140-0114	4		INDUCTOR RF-CH-MLD 10UH 10%	28480	9140-0114
A32L6	9140-0114	4		INDUCTOR RF-CH-MLD 10UH 10%	28480	9140-0114
A32L7	9100-2249	6	6	INDUCTOR RF-CH-MLD 150NH 10%	28480	9100-2249
A32L8	9100-2249	6		INDUCTOR RF-CH-MLD 150NH 10%	28480	9100-2249
A32L9	9100-2249	6		INDUCTOR RF-CH-MLD 150NH 10%	28480	9100-2249
A32L10	9100-2247	4	4	INDUCTOR RF-CH-MLD 100NH 10%	28480	9100-2247
A32L11	9140-0158	6	2	INDUCTOR RF-CH-MLD 1UH 10%	28480	9140-0158
A32L12	9140-0114	4		INDUCTOR RF-CH-MLD 10UH 10%	28480	9140-0114
A32L13	9140-0114	4		INDUCTOR RF-CH-MLD 10UH 10%	28480	9140-0114
A32L14	9140-0141	7	2	INDUCTOR RF-CH-MLD 680NH 10%	28480	9140-0141
A32L15	9100-2251	0	2	INDUCTOR RF-CH-MLD 220NH 10%	28480	9100-2251
A32L16	9100-2891	4		INDUCTOR RF-CH-MLD 50NH 10%	28480	9100-2891
A32L17	9100-2247	4		INDUCTOR RF-CH-MLD 100NH 10%	28480	9100-2247
A32L18	9140-0114	4		INDUCTOR RF-CH-MLD 10UH 10%	28480	9140-0114
A32L19	9140-0114	4		INDUCTOR RF-CH-MLD 10UH 10%	28480	9140-0114
A32L20	9140-0114	4		INDUCTOR RF-CH-MLD 10UH 10%	28480	9140-0114
A32L21	9140-0141	7		INDUCTOR RF-CH-MLD 680NH 10%	28480	9140-0141
A32L22	9100-2249	6		INDUCTOR RF-CH-MLD 150NH 10%	28480	9100-2249
A32L23	9100-2247	4		INDUCTOR RF-CH-MLD 100NH 10%	28480	9100-2247
A32L24	9140-0158	6		INDUCTOR RF-CH-MLD 1UH 10%	28480	9140-0158
A32L25	9100-2251	0		INDUCTOR RF-CH-MLD 220NH 10%	28480	9100-2251
A32L26	9100-2891	4		INDUCTOR RF-CH-MLD 50NH 10%	28480	9100-2891
A32L27	9100-2247	4		INDUCTOR RF-CH-MLD 100NH 10%	28480	9100-2247
A32L28	9100-2249	6		INDUCTOR RF-CH-MLD 150NH 10%	28480	9100-2249
A32L29	9100-2249	6		INDUCTOR RF-CH-MLD 150NH 10%	28480	9100-2249
A32MP1	04195-00675		1	PLATE SHIELD		
A32Q1	1854-1073	1	4	TRANSISTOR NPN SI PD=600MW FT=6.5GHZ	28480	1854-1073
A32Q2	1854-1073	1		TRANSISTOR NPN SI PD=600MW FT=6.5GHZ	28480	1854-1073
	9170-0029	3	2	CORE-SHIELDING BEAD	28480	9170-0029
A32Q3	1854-1073	1		TRANSISTOR NPN SI PD=600MW FT=6.5GHZ	28480	1854-1073
	9170-0029	3		CORE-SHIELDING BEAD	28480	9170-0029
A32Q4	1854-1073	1		TRANSISTOR NPN SI PD=600MW FT=6.5GHZ	28480	1854-1073
A32R1	0698-3443	0	2	RESISTOR 287 1% .125W F TC=0+-100	24546	CT4-1/8-T0-287R-F
A32R2	0757-0294	9	1	RESISTOR 17.8 1% .125W F TC=0+-100	19701	5033R-1/8-T0-17R8-F
A32R3	0698-3443	0		RESISTOR 287 1% .125W F TC=0+-100	24546	CT4-1/8-T0-287R-F
A32R4	0757-0395	1	2	RESISTOR 56.2 1% .125W F TC=0+-100	24546	CT4-1/8-T0-56R2-F
A32R5	0698-3438	3	2	RESISTOR 147 1% .125W F TC=0+-100	24546	CT4-1/8-T0-147R-F
A32R6	0698-3488	3	12	RESISTOR 442 1% .125W F TC=0+-100	24546	CT4-1/8-T0-422R-F
A32R7	0757-0295	0	12	RESISTOR 11.5 1% .125W F TC=0+-100	19701	5033R-1/8-T0-11R5-F
A32R8	0698-3488	3		RESISTOR 442 1% .125W F TC=0+-100	24546	CT4-1/8-T0-422R-F
A32R9	0698-3441	8	3	RESISTOR 215 1% .125W F TC=0+-100	24546	CT4-1/8-T0-215R-F
A32R10	0698-3439	4	3	RESISTOR 178 1% .125W F TC=0+-100	24546	CT4-1/8-T0-178R-F
A32R11	0757-0395	1		RESISTOR 56.2 1% .125W F TC=0+-100	24546	CT4-1/8-T0-56R2-F
A32R12	0698-3438	3		RESISTOR 147 1% .125W F TC=0+-100	24546	CT4-1/8-T0-147R-F
A32R13	0698-3488	3		RESISTOR 442 1% .125W F TC=0+-100	24546	CT4-1/8-T0-422R-F

*** Indicates factory selected value.**

Table 1. A32 Replaceable Parts (3 of 3)

Reference Designator	HP Part Number	C D	Qty.	Description	Mfr Code	Mfr Part Number
A32R14	0757-0295	0		RESISTOR 11.5 1% .125W F TC=0+-100	19701	5033R-1/8-T0-11R5-F
A32R15	0698-3488	3		RESISTOR 442 1% .125W F TC=0+-100	24546	CT4-1/8-T0-422R-F
A32R16	0757-0346	2	2	RESISTOR 10 1% .125W F TC=0+-100	28480	0757-0346
A32R17	0757-0346	2		RESISTOR 10 1% .125W F TC=0+-100	28480	0757-0346
A32R18	0698-3132	4	2	RESISTOR 261 1% .125W F TC=0+-100	24546	CT4-1/8-T0-2610-F
A32R19	0757-0295	0		RESISTOR 11.5 1% .125W F TC=0+-100	19701	5033R-1/8-T0-11R5-F
A32R20	0757-0295	0		RESISTOR 11.5 1% .125W F TC=0+-100	19701	5033R-1/8-T0-11R5-F
A32R21	0757-0295	0		RESISTOR 11.5 1% .125W F TC=0+-100	19701	5033R-1/8-T0-11R5-F
A32R22	0698-3441	8		RESISTOR 215 1% .125W F TC=0+-100	24546	CT4-1/8-T0-215R-F
A32R23	0698-3439	4		RESISTOR 178 1% .125W F TC=0+-100	24546	CT4-1/8-T0-178R-F
A32R24	0757-0403	2	2	RESISTOR 121 1% .125W F TC=0+-100	24546	CT4-1/8-T0-121R-F
A32R25	0698-3430	5	2	RESISTOR 21.5 1% .125W F TC=0+-100	03888	PME55-1/8-T0-21R5-F
A32R26	0698-3432	7	4	RESISTOR 26.1 1% .125W F TC=0+-100	03888	PME55-1/8-T0-26R1-F
A32R27	0698-3432	7		RESISTOR 26.1 1% .125W F TC=0+-100	03888	PME55-1/8-T0-26R1-F
A32R28	0698-3488	3		RESISTOR 442 1% .125W F TC=0+-100	24546	CT4-1/8-T0-422R-F
A32R29	0757-0295	0		RESISTOR 11.5 1% .125W F TC=0+-100	19701	5033R-1/8-T0-11R5-F
A32R30	0698-3488	3		RESISTOR 442 1% .125W F TC=0+-100	24546	CT4-1/8-T0-422R-F
A32R31	0698-4418	1	4	RESISTOR 205 1% .125W F TC=0+-100	24546	CT4-1/8-T0-205R-F
A32R32	0698-3495	2	2	RESISTOR 866 1% .125W F TC=0+-100	24546	CT4-1/8-T0-866R-F
A32R33	0698-3488	3		RESISTOR 442 1% .125W F TC=0+-100	24546	CT4-1/8-T0-422R-F
A32R34	0757-0295	0		RESISTOR 11.5 1% .125W F TC=0+-100	19701	5033R-1/8-T0-11R5-F
A32R35	0698-3488	3		RESISTOR 442 1% .125W F TC=0+-100	24546	CT4-1/8-T0-422R-F
A32R36	0698-4418	1		RESISTOR 205 1% .125W F TC=0+-100	24546	CT4-1/8-T0-205R-F
A32R37	0757-0411	2	2	RESISTOR 332 1% .125W F TC=0+-100	24546	CT4-1/8-T0-332R-F
A32R38	0757-0421	4	2	RESISTOR 825 1% .125W F TC=0+-100	24546	CT4-1/8-T0-825R-F
A32R39	0757-0295	0		RESISTOR 11.5 1% .125W F TC=0+-100	19701	5033R-1/8-T0-11R5-F
A32R40	0757-0295	0		RESISTOR 11.5 1% .125W F TC=0+-100	19701	5033R-1/8-T0-11R5-F
A32R41	0757-0295	0		RESISTOR 11.5 1% .125W F TC=0+-100	19701	5033R-1/8-T0-11R5-F
A32R42	0698-3132	4		RESISTOR 261 1% .125W F TC=0+-100	24546	CT4-1/8-T0-2610-F
A32R43	0698-3432	7		RESISTOR 26.1 1% .125W F TC=0+-100	03888	PME55-1/8-T0-26R1-F
A32R44	0698-3432	7		RESISTOR 26.1 1% .125W F TC=0+-100	03888	PME55-1/8-T0-26R1-F
A32R45	0698-3430	5		RESISTOR 21.5 1% .125W F TC=0+-100	03888	PME55-1/8-T0-21R5-F
A32R46	0698-4418	1		RESISTOR 205 1% .125W F TC=0+-100	24546	CT4-1/8-T0-205R-F
A32R47	0757-0411	2		RESISTOR 332 1% .125W F TC=0+-100	24546	CT4-1/8-T0-332R-F
A32R48	0698-3441	8		RESISTOR 215 1% .125W F TC=0+-100	24546	CT4-1/8-T0-215R-F
A32R49	0698-3439	4		RESISTOR 178 1% .125W F TC=0+-100	24546	CT4-1/8-T0-178R-F
A32R50	0757-0403	2		RESISTOR 121 1% .125W F TC=0+-100	24546	CT4-1/8-T0-121R-F
A32R51	0698-3488	3		RESISTOR 442 1% .125W F TC=0+-100	24546	CT4-1/8-T0-422R-F
A32R52	0757-0295	0		RESISTOR 11.5 1% .125W F TC=0+-100	19701	5033R-1/8-T0-11R5-F
A32R53	0698-3488	3		RESISTOR 442 1% .125W F TC=0+-100	24546	CT4-1/8-T0-422R-F
A32R54	0698-4418	1		RESISTOR 205 1% .125W F TC=0+-100	24546	CT4-1/8-T0-205R-F
A32R55	0698-3495	2		RESISTOR 866 1% .125W F TC=0+-100	24546	CT4-1/8-T0-866R-F
A32R56	0698-3488	3		RESISTOR 442 1% .125W F TC=0+-100	24546	CT4-1/8-T0-422R-F
A32R57	0757-0295	0		RESISTOR 11.5 1% .125W F TC=0+-100	19701	5033R-1/8-T0-11R5-F
A32R58	0698-3488	3		RESISTOR 442 1% .125W F TC=0+-100	24546	CT4-1/8-T0-422R-F
A32R59	0757-0421	4		RESISTOR 825 1% .125W F TC=0+-100	24546	CT4-1/8-T0-825R-F
A32U1	1826-1310	0	2	IC RF/IF AMPL WB 4-DIP-P PKG	28480	1826-1310
A32U2	1826-1310	0		IC RF/IF AMPL WB 4-DIP-P PKG	28480	1826-1310
A32U3	1826-0147	9	1	IC 7812 V RGLTR TO-220	04713	MC7812CP
A32W1	04195-61661	5	1	WIRE ASSEMBLY 3PIN	28480	04195-61661
	9170-0029	3	2	CORE-SHIELDING BEAD	28480	9170-0029
	04195-00905		1	CASE SHIELD, COMPONENT SIDE		
	04195-00904		1	CASE SHIELD, CIRCUIT SIDE		

*** Indicates factory selected value.**

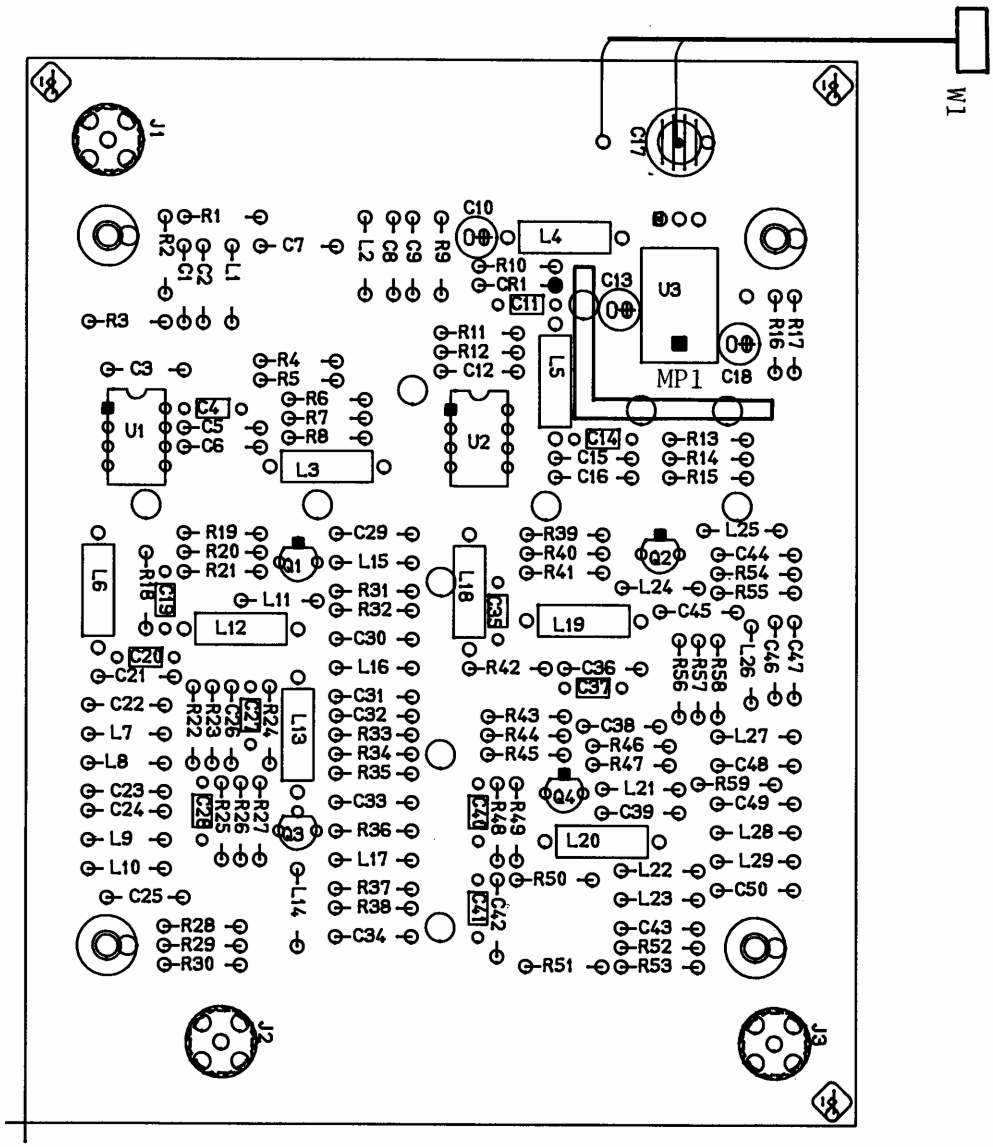

Figure 1. A32 2nd IF Local Driver Amplifier Component Locations

A32 2ND IF LOCAL DRIVER AMPLIFIER

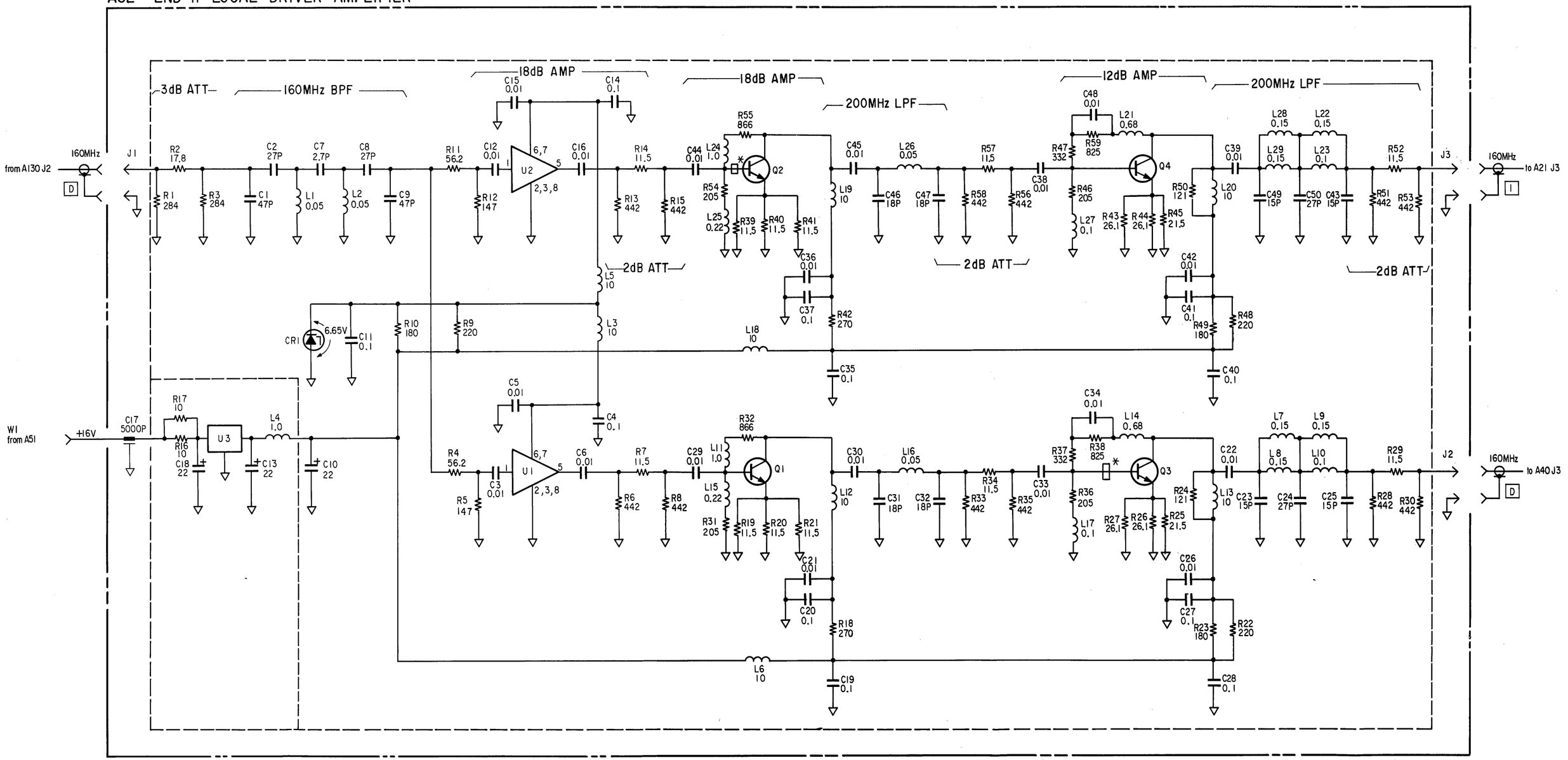

1ST IF LOCAL DRIVER PREAMPLIFIER SERVICE SHEET

The A33 first IF local driver preamplifier assembly uses two separate amplifiers to amplify the VCO signal from the frequency generator assembly. The outputs of this board drive the A34 first IF local driver amplifier which drives the first IF local converter mixers in the receiver and signal source circuits.

CIRCUIT DESCRIPTION

R1, R2, and R3 form a 3 dB attenuator pad. Q1 and associated components form a 12 dB amplifier. C6, L4, C7, L6, L7, C8, and L8 form a bandpass filter whose passband is from 200 MHz to 500 MHz. R16 in parallel with C25, and R27 in parallel with C26 split the input signal for two preamplifier circuits.

The two preamplifier circuits are electrically identical. The preamplifier circuit from R17 to J2 drives the signal source circuit, and the preamplifier from R28 to J3 drives the receiver circuit. These preamplifiers are interchangeable for troubleshooting purposes. Since the amplifier sections are identical, only one will be explained in the following circuit description.

R18, R19, and R20 form a 10 dB attenuator pad. U1 is a 19 dB gain amplifier (voltage gain of 9). R21, R22, C12, and R23 form a 2 dB attenuator pad.

U3 is a +12 V voltage regulator.

The HP 4195A measurement frequency and A33 board's input and output frequency are listed below.

Measurement Frequency	VCO Frequency
F < 150 MHz	Meas. Freq. + 246.666 666 666 MHz
150 MHz ≤ F < 320 MHz	Meas. Freq. + 86.666 666 666 MHz
320 MHz ≤ F ≤ 500 MHz	Meas. Freq. - 86.666 666 666 MHz

TROUBLESHOOTING GUIDE

Examples of this board's input and output signal spectrum are shown next. The left hand side shows the signal spectrum when the HP 4195A measurement frequency is 320 MHz, and the right hand side shows the signal spectrum for a 500 MHz measurement frequency.

1. Input Signal Spectrum from Cable "2"

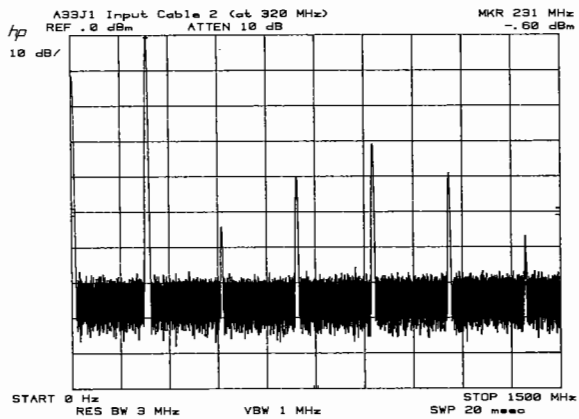

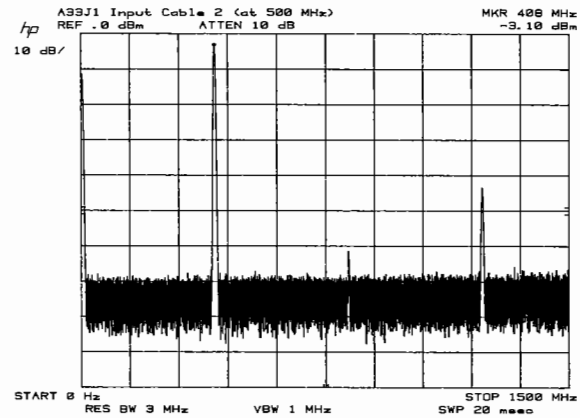

2. Output Signal Spectrum Observed at A33J2

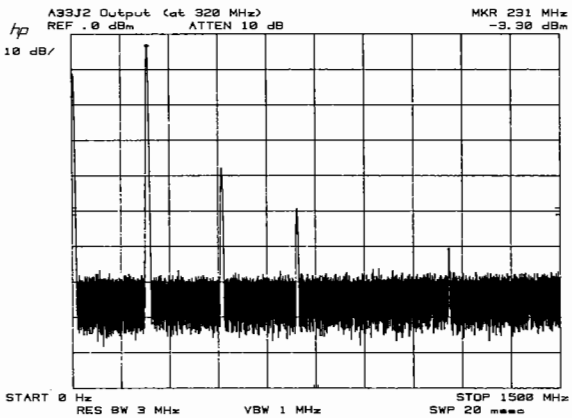

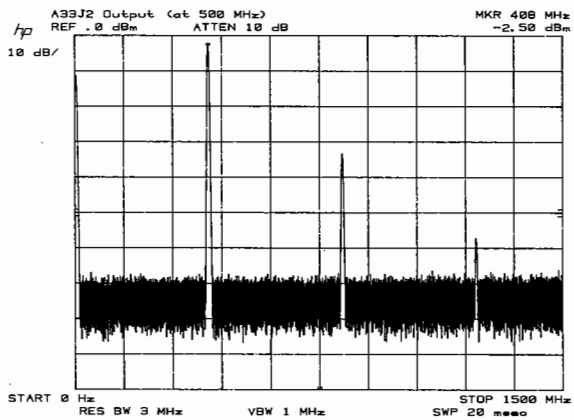

3. Output Signal Spectrum Observed at A33J3

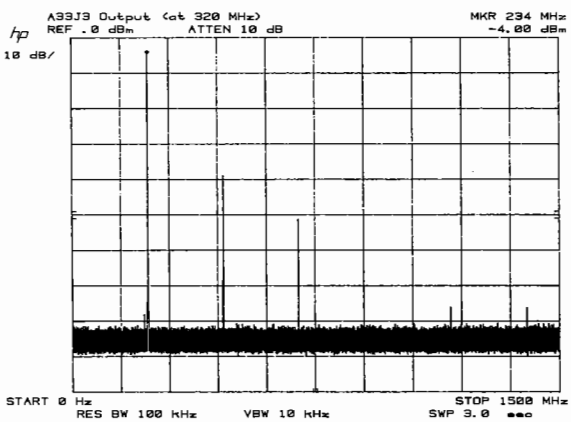

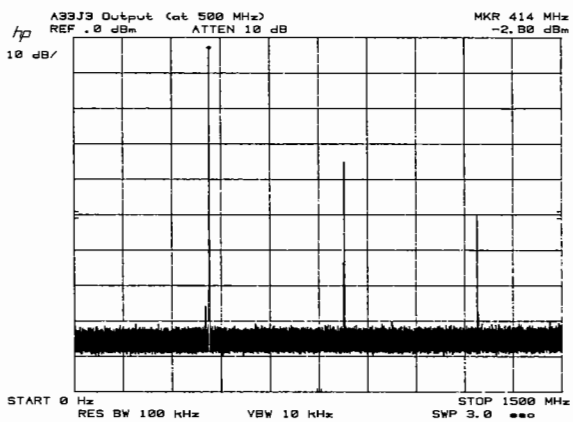

Table 1. A33 Replaceable Parts (1 of 2)

Reference Designator	HP Part Number	C D	Qty.	Description	Mfr Code	Mfr Part Number
A33				1ST IF LOCAL DRIVER PREAMPLIFIER		
A33	04195-66533	0	1	1ST LOCAL AMP (R)	28480	04195-66533
A33C1	0160-4832	4	9	CAPACITOR-FXD .01UF +-10% 100VDC CER	28480	0160-4832
A33C2	0160-4791	4	2	CAPACITOR-FXD 10PF +-5% 100VDC CER 0+-30	28480	0160-4791
A33C3	0160-4832	4		CAPACITOR-FXD .01UF +-10% 100VDC CER	28480	0160-4832
A33C4	0160-4832	4		CAPACITOR-FXD .01UF +-10% 100VDC CER	28480	0160-4832
A33C5	0160-4835	7	4	CAPACITOR-FXD .1UF +-10% 50VDC CER	28480	0160-4835
A33C6	0160-4793	6	4	CAPACITOR-FXD 6.8PF +-.5PF 100VDC CER	28480	0160-4793
A33C7	0160-4791	4		CAPACITOR-FXD 10PF +-5% 100VDC CER 0+-30	28480	0160-4791
A33C8	0160-4793	6		CAPACITOR-FXD 6.8PF +-.5PF 100VDC CER	28480	0160-4793
A33C9	0160-4832	4		CAPACITOR-FXD .01UF +-10% 100VDC CER	28480	0160-4832
A33C10	0160-4835	7		CAPACITOR-FXD .1UF +-10% 50VDC CER	28480	0160-4835
A33C11	0160-4832	4		CAPACITOR-FXD .01UF +-10% 100VDC CER	28480	0160-4832
A33C12	0160-4787	8	2	CAPACITOR-FXD 22PF +-5% 100VDC CER 0+-30	28480	0160-4787
A33C13	0160-4832	4		CAPACITOR-FXD .01UF +-10% 100VDC CER	28480	0160-4832
A33C14	0160-4835	7		CAPACITOR-FXD .1UF +-10% 50VDC CER	28480	0160-4835
A33C15	0160-4832	4		CAPACITOR-FXD .01UF +-10% 100VDC CER	28480	0160-4832
A33C16	0160-4787	8		CAPACITOR-FXD 22PF +-5% 100VDC CER 0+-30	28480	0160-4787
A33C17	0160-2437	1	1	CAPACITOR-FDTHRU 5000PF +80 -20% 200V	28480	0160-2437
	2580-0006	8		NUT-HEX	28480	2580-0006
	8150-3490	5		WIRE	28480	8150-3490
A33C18				NOT ASSIGNED		
A33C19	0180-3363	6	3	CAPACITOR-FXD 22UF+-20% 25VDC AL	28480	0180-3363
A33C20	0180-3363	6		CAPACITOR-FXD 22UF+-20% 25VDC AL	28480	0180-3363
A33C21	0180-3363	6		CAPACITOR-FXD 22UF+-20% 25VDC AL	28480	0180-3363
A33C22	0160-4835	7		CAPACITOR-FXD .1UF +-10% 50VDC CER	28480	0160-4835
A33C23	0160-4832	4		CAPACITOR-FXD .01UF +-10% 100VDC CER	28480	0160-4832
A33C24	0160-4832	4		CAPACITOR-FXD .01UF +-10% 100VDC CER	28480	0160-4832
A33C25	0160-4793	6		CAPACITOR-FXD 6.8PF +-.5PF 100VDC CER	28480	0160-4793
A33C26	0160-4793	6		CAPACITOR-FXD 6.8PF +-.5PF 100VDC CER	28480	0160-4793
A33CR1	1902-0958	2	1	DIODE-ZNR 10V 5% DO-35 PD=.4W TC=+.075%	28480	1902-0958
A33J1	1250-0257	1	3	CONNECTOR-RF SMB M PC 50-OHM	28480	1250-0257
A33J2	1250-0257	1		CONNECTOR-RF SMB M PC 50-OHM	28480	1250-0257
A33J3	1250-0257	1		CONNECTOR-RF SMB M PC 50-OHM	28480	1250-0257
A33L1	9100-2247	4	2	INDUCTOR RF-CH-MLD 100NH 10%	28480	9100-2247
A33L2	9140-0114	4	4	INDUCTOR RF-CH-MLD 10UH 10%	28480	9140-0114
A33L3	9140-0114	4		INDUCTOR RF-CH-MLD 10UH 10%	28480	9140-0114
A33L4	9100-2891	4	4	INDUCTOR RF-CH-MLD 50NH 10%	28480	9100-2891
A33L5				NOT ASSIGNED		
A33L6	9100-2891	4		INDUCTOR RF-CH-MLD 50NH 10%	28480	9100-2891
A33L7	9100-2891	4		INDUCTOR RF-CH-MLD 50NH 10%	28480	9100-2891
A33L8	9100-2891	4		INDUCTOR RF-CH-MLD 50NH 10%	28480	9100-2891
A33L9				NOT ASSIGNED		
A33L10	9140-0114	4		INDUCTOR RF-CH-MLD 10UH 10%	28480	9140-0114
A33L11	9140-0114	4		INDUCTOR RF-CH-MLD 10UH 10%	28480	9140-0114
A33L12	9100-3551	5	1	INDUCTOR RF-CH-MLD 1UH 5%	28480	9100-3551
A33L13	9100-2247	4		INDUCTOR RF-CH-MLD 100NH 10%	28480	9100-2247
A33L14	9100-2255	4	1	INDUCTOR RF-CH-MLD 470NH 10%	28480	9100-2255
A33MP1	04195-00675		1	PLATE SHIELD		
A33Q1	1854-0720	3	1	TRANSISTOR NPN SI PD=500MW FT=4GHZ	28480	1854-0720

*** Indicates factory selected value.**

Table 1. A33 Replaceable Parts (2 of 2)

Reference Designator	HP Part Number	C D	Qty.	Description	Mfr Code	Mfr Part Number
A33R1	0757-0400	9	2	RESISTOR 90.9 1% .125W F TC=0+-100	24546	CT4-1/8-T0-90R9-F
A33R2	0757-0399	5	1	RESISTOR 82.5 1% .125W F TC=0+-100	24546	CT4-1/8-T0-82R5-F
A33R3	0757-0400	9		RESISTOR 90.9 1% .125W F TC=0+-100	24546	CT4-1/8-T0-90R9-F
A33R4	0757-0411	2	2	RESISTOR 332 1% .125W F TC=0+-100	24546	CT4-1/8-T0-332R-F
A33R5	0698-4418	1	1	RESISTOR 205 1% .125W F TC=0+-100	24546	CT4-1/8-T0-205R-F
A33R6	0757-0411	2		RESISTOR 332 1% .125W F TC=0+-100	24546	CT4-1/8-T0-332R-F
A33R7	0698-7197	9	3	RESISTOR 23.7 1% .05W F TC=0+-100	24546	C3-1/8-T0-23R7-F
A33R8	0698-7197	9		RESISTOR 23.7 1% .05W F TC=0+-100	24546	C3-1/8-T0-23R7-F
A33R9	0698-7197	9		RESISTOR 23.7 1% .05W F TC=0+-100	24546	C3-1/8-T0-23R7-F
A33R10	0698-4413	6	1	RESISTOR 154 1% .125W F TC=0+-100	24546	CT4-1/8-T0-154R-F
A33R11	0698-3441	8	1	RESISTOR 215 1% .125W F TC=0+-100	24546	CT4-1/8-T0-215R-F
A33R12	0698-3439	4	1	RESISTOR 178 1% .125W F TC=0+-100	24546	CT4-1/8-T0-178R-F
A33R13				NOT ASSIGNED		
A33R14				NOT ASSIGNED		
A33R15				NOT ASSIGNED		
A33R16	0757-0397	3	2	RESISTOR 68.1 1% .125W F TC=0+-100	24546	CT4-1/8-T0-68R1-F
A33R17	0757-0401	0	2	RESISTOR 100 1% .125W F TC=0+-100	24546	CT4-1/8-T0-101-F
A33R18	0698-4401	2	4	RESISTOR 95.3 1% .125W F TC=0+-100	24546	CT4-1/8-T0-95R3-F
A33R19	0698-4392	0	2	RESISTOR 71.5 1% .125W F TC=0+-100	24546	CT4-1/8-T0-71R5-F
A33R20	0698-4401	2		RESISTOR 95.3 1% .125W F TC=0+-100	24546	CT4-1/8-T0-95R3-F
A33R21	0698-3488	3	4	RESISTOR 442 1% .125W F TC=0+-100	24546	CT4-1/8-T0-422R-F
A33R22	0757-0295	0	2	RESISTOR 11.5 1% .125W F TC=0+-100	19701	5033R-1/8-T0-11R5-F
A33R23	0698-3488	3		RESISTOR 442 1% .125W F TC=0+-100	24546	CT4-1/8-T0-422R-F
A33R24	0757-0346	2	2	RESISTOR 10 1% .125W F TC=0+-100	28480	0757-0346
A33R25	0757-0346	2		RESISTOR 10 1% .125W F TC=0+-100	28480	0757-0346
A33R26	0757-0388	2	1	RESISTOR 30.1 1% .125W F TC=0+-100	28480	0757-0388
A33R27	0757-0397	3		RESISTOR 68.1 1% .125W F TC=0+-100	24546	CT4-1/8-T0-68R1-F
A33R28	0757-0401	0		RESISTOR 100 1% .125W F TC=0+-100	24546	CT4-1/8-T0-101-F
A33R29	0698-4401	2		RESISTOR 95.3 1% .125W F TC=0+-100	24546	CT4-1/8-T0-95R3-F
A33R30	0698-4392	0		RESISTOR 71.5 1% .125W F TC=0+-100	24546	CT4-1/8-T0-71R5-F
A33R31	0698-4401	2		RESISTOR 95.3 1% .125W F TC=0+-100	24546	CT4-1/8-T0-95R3-F
A33R32	0698-3488	3		RESISTOR 442 1% .125W F TC=0+-100	24546	CT4-1/8-T0-422R-F
A33R33	0757-0295	0		RESISTOR 11.5 1% .125W F TC=0+-100	19701	5033R-1/8-T0-11R5-F
A33R34	0698-3488	3		RESISTOR 442 1% .125W F TC=0+-100	24546	CT4-1/8-T0-422R-F
A33U1	1826-1311	1	2	IC RF/IF AMPL WB 4-DIP-P PKG	28480	1826-1311
A33U2	1826-1311	1		IC RF/IF AMPL WB 4-DIP-P PKG	28480	1826-1311
A33U3	1826-0147	9	1	IC 7812 V RGLTR TO-220	04713	MC7812CP
A33W1	04195-61662	6	1	WIRE ASSEMBLY 6PIN	28480	04195-61662
	04195-00693		1	CASE SHIELD, COMPONENT SIDE		
	04195-00694		1	CASE SHIELD, CIRCUIT SIDE		

*** Indicates factory selected value.**

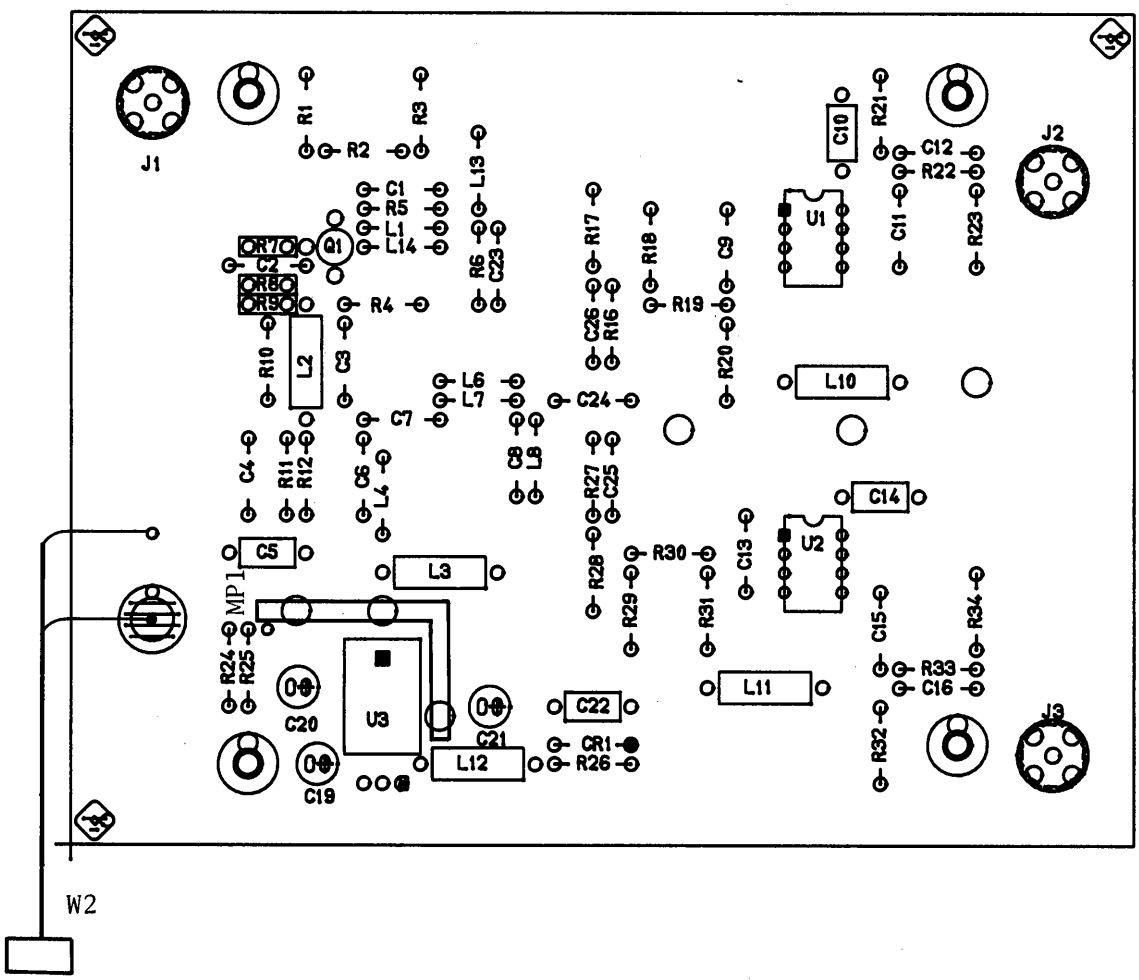

Figure 1. A33 1st IF Local Driver Preamplifier Component Locations

A33 1ST IF LOCAL DRIVER PREAMPLIFIER

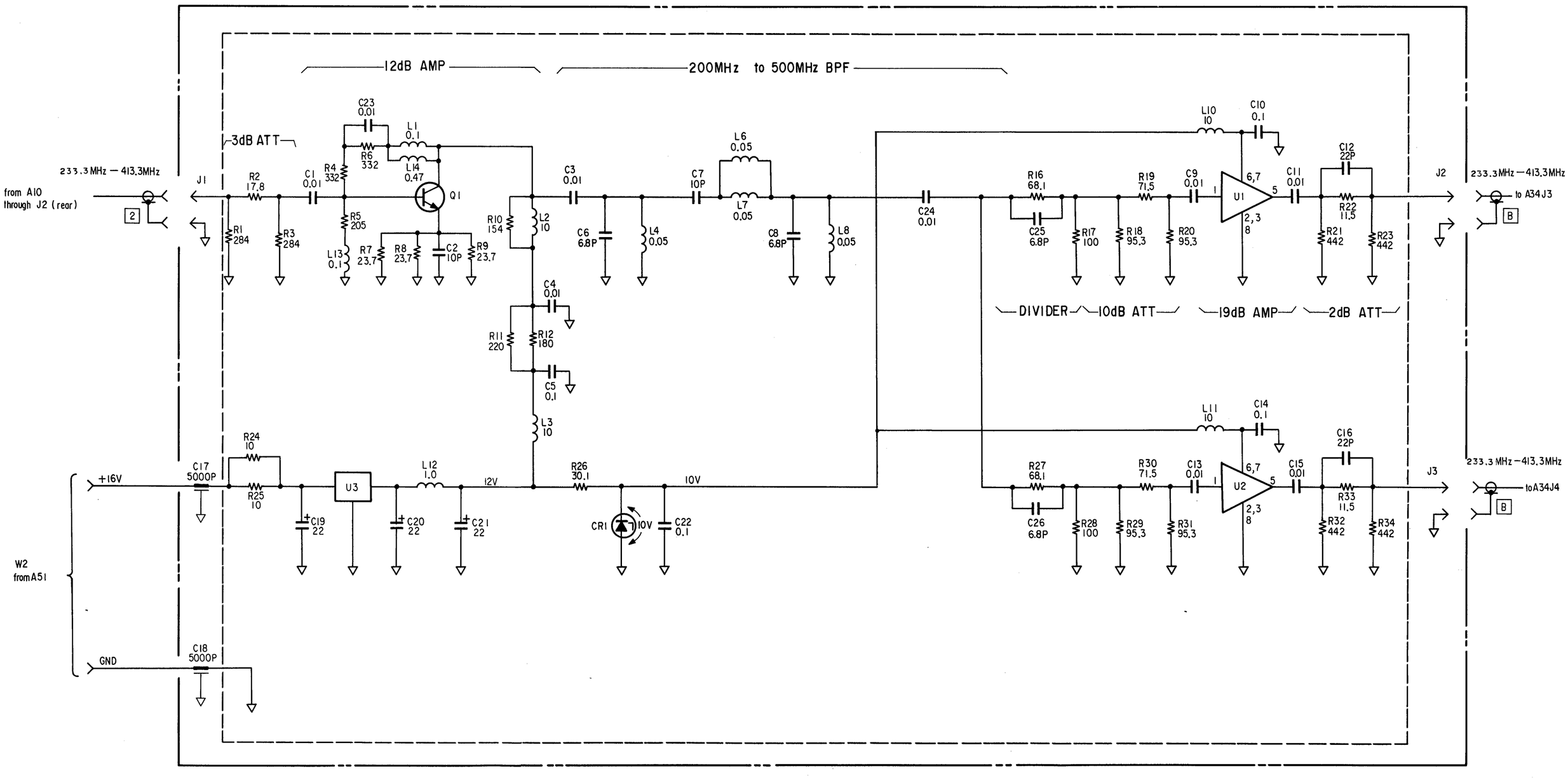

1ST IF LOCAL DRIVER AMPLIFIER SERVICE SHEET

The A34 first IF local driver amplifier assembly has two separate amplifiers to amplify the VCO signal from the A33 first IF local driver preamplifier assembly.

CIRCUIT DESCRIPTION

The amplifier circuit from J3 to J1 drives the signal source circuit, the amplifier circuit from J4 to J2 drives the receiver circuit.

Q9 and associated components amplify the input signal by 18 dB (voltage gain of 8). R29, R28, C22, and R25 form a 6 dB attenuator pad.

Q1, Q2, and associated components amplifies the signal by 9 dB (voltage gain of 2.8). Q5 and Q6 supply stabilized bias current to Q1 and Q2, respectively. When Q1 (or Q2) collector current increases, Q5 (or Q6) emmiter current decreases, less bias current is supplied to Q1 (or Q2), then Q1 (or Q2) collector current (that has increased) is decreased.

L3, L4, C2, L1, and L2 form a lowpass filter whose cutoff frequency is 500 MHz.

Q10 and associated components amplify the input signal by 18 dB (voltage gain of 8). R36, R37, C26, and R38 form a 2 dB attenuator pad.

Q3, Q4, and associated components amplifies the signal by 9 dB (voltage gain of 2.8). Q7 and Q8 supply stabilized bias current to Q3 and Q4, respectively. When Q3 (or Q4) collector current increases, Q7 (or Q8) emmiter current decreases, less bias current is supplied to Q3 (or Q4), then Q7 (or Q8) collector current (that has increased) is decreased.

L5, L6, C3, L7, and L8 form a lowpass filter whose cutoff frequency is 500 MHz.

U1 and U2 are -12 V and +12 V voltage regulators, respectively.

The HP 4195A measurement frequency and A34 board's input/output frequency are listed next.

Measurement Frequency	VCO Frequency
F < 150 MHz	Meas. Freq. + 246.666 666 666 MHz
150 MHz ≤ F < 320 MHz	Meas. Freq. + 86.666 666 666 MHz
320 MHz ≤ F ≤ 500 MHz	Meas. Freq. - 86.666 666 666 MHz

TROUBLESHOOTING GUIDE

Examples of this board's output signal spectrum are shown below. The left hand side shows an example output spectrum when the HP 4195A measurement frequency is 320 MHz, and the right hand side shows an example for 500 MHz.

1. Output Signal Spectrum Observed at A34J1

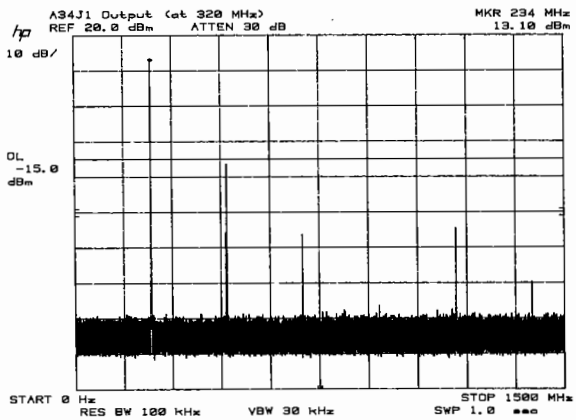

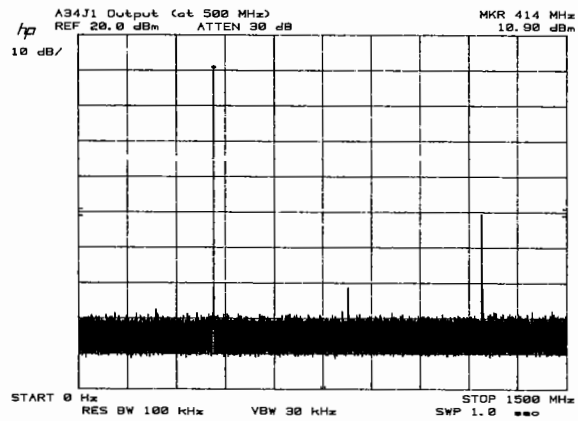

2. Output Signal Spectrum Observed at A34J2

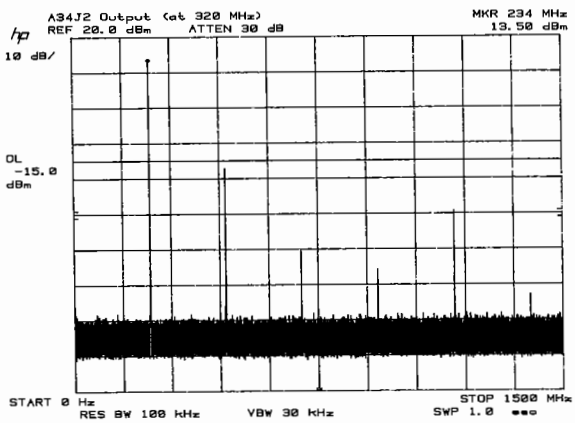

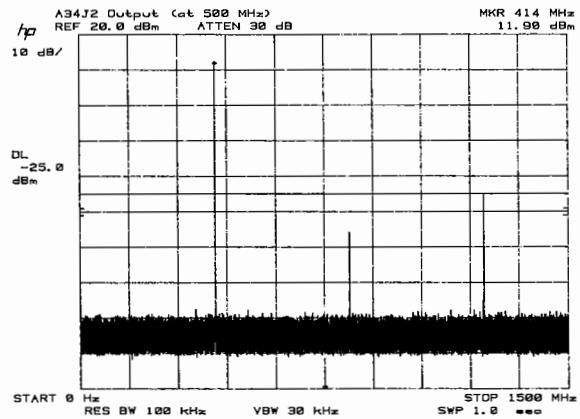

Table 1. A34 Replaceable Parts (1 of 3)

Reference Designator	HP Part Number	C D	Qty.	Description	Mfr Code	Mfr Part Number
A34				1ST IF LOCAL DRIVER AMPLIFIER		
A34	04195-66534	1	1	1ST LOCAL AMP (S)	28480	04195-66534
A34C1				NOT ASSIGNED		
A34C2	0160-4793	6	2	CAPACITOR-FXD 6.8PF +-.5PF 100VDC CER	28480	0160-4793
A34C3	0160-4793	6		CAPACITOR-FXD 6.8PF +-.5PF 100VDC CER	28480	0160-4793
A34C4				NOT ASSIGNED		
A34C5	0160-4832	4	20	CAPACITOR-FXD .01UF +-10% 100VDC CER	28480	0160-4832
A34C6	0160-4835	7	4	CAPACITOR-FXD .1UF +-10% 50VDC CER	28480	0160-4835
A34C7	0160-4832	4		CAPACITOR-FXD .01UF +-10% 100VDC CER	28480	0160-4832
A34C8	0160-4832	4		CAPACITOR-FXD .01UF +-10% 100VDC CER	28480	0160-4832
A34C9	0160-4832	4		CAPACITOR-FXD .01UF +-10% 100VDC CER	28480	0160-4832
A34C10	0160-4835	7		CAPACITOR-FXD .1UF +-10% 50VDC CER	28480	0160-4835
A34C11	0160-4832	4		CAPACITOR-FXD .01UF +-10% 100VDC CER	28480	0160-4832
A34C12	0160-4832	4		CAPACITOR-FXD .01UF +-10% 100VDC CER	28480	0160-4832
A34C13	0160-4835	7		CAPACITOR-FXD .1UF +-10% 50VDC CER	28480	0160-4835
A34C14	0160-4832	4		CAPACITOR-FXD .01UF +-10% 100VDC CER	28480	0160-4832
A34C15	0160-4832	4		CAPACITOR-FXD .01UF +-10% 100VDC CER	28480	0160-4832
A34C16	0160-4832	4		CAPACITOR-FXD .01UF +-10% 100VDC CER	28480	0160-4832
A34C17	0160-4832	4		CAPACITOR-FXD .01UF +-10% 100VDC CER	28480	0160-4832
A34C18	0160-4835	7		CAPACITOR-FXD .1UF +-10% 50VDC CER	28480	0160-4835
A34C19	0180-3363	6	6	CAPACITOR-FXD 22UF+-20% 25VDC AL	28480	0180-3363
A34C20	0160-4832	4		CAPACITOR-FXD .01UF +-10% 100VDC CER	28480	0160-4832
A34C21	0160-4832	4		CAPACITOR-FXD .01UF +-10% 100VDC CER	28480	0160-4832
A34C22	0160-4791	4	1	CAPACITOR-FXD 10PF +-5% 100VDC CER 0+-30	28480	0160-4791
A34C23	0160-4832	4		CAPACITOR-FXD .01UF +-10% 100VDC CER	28480	0160-4832
A34C24	0160-4832	4		CAPACITOR-FXD .01UF +-10% 100VDC CER	28480	0160-4832
A34C25	0160-4832	4		CAPACITOR-FXD .01UF +-10% 100VDC CER	28480	0160-4832
A34C26	0160-4787	8	1	CAPACITOR-FXD 22PF +-5% 100VDC CER 0+-30	28480	0160-4787
A34C27	0160-4832	4		CAPACITOR-FXD .01UF +-10% 100VDC CER	28480	0160-4832
A34C28	0160-4832	4		CAPACITOR-FXD .01UF +-10% 100VDC CER	28480	0160-4832
A34C29	0180-3363	6		CAPACITOR-FXD 22UF+-20% 25VDC AL	28480	0180-3363
A34C30	0160-4832	4		CAPACITOR-FXD .01UF +-10% 100VDC CER	28480	0160-4832
A34C31	0180-3363	6		CAPACITOR-FXD 22UF+-20% 25VDC AL	28480	0180-3363
A34C32	0180-3363	6		CAPACITOR-FXD 22UF+-20% 25VDC AL	28480	0180-3363
A34C33	0160-2437	1	2	CAPACITOR-FDTHRU 5000PF +80 -20% 200V	28480	0160-2437
	2580-0006	8	2	NUT-HEX	28480	2580-0006
	8150-3490	5	2	WIRE	28480	8150-3490
A34C34	0160-4806	2	2	CAPACITOR-FXD 39PF +-5% 100VDC CER 0+-30	28480	0160-4806
A34C35	0160-4832	4		CAPACITOR-FXD .01UF +-10% 100VDC CER	28480	0160-4832
A34C36	0160-4832	4		CAPACITOR-FXD .01UF +-10% 100VDC CER	28480	0160-4832
A34C37	0160-4806	2		CAPACITOR-FXD 39PF +-5% 100VDC CER 0+-30	28480	0160-4806
A34C38	0160-2437	1		CAPACITOR-FDTHRU 5000PF +80 -20% 200V	28480	0160-2437
	2580-0006	8		NUT-HEX	28480	2580-0006
	8150-3490	5		WIRE	28480	8150-3490
A34C39	0180-3363	6		CAPACITOR-FXD 22UF+-20% 25VDC AL	28480	0180-3363
A34C40	0180-3363	6		CAPACITOR-FXD 22UF+-20% 25VDC AL	28480	0180-3363
A34J1	1250-0836	2	2	CONNECTOR-RF SMC M PC 50-OHM	28480	1250-0836
A34J2	1250-0836	2		CONNECTOR-RF SMC M PC 50-OHM	28480	1250-0836
A34J3	1250-0257	1	2	CONNECTOR-RF SMB M PC 50-OHM	28480	1250-0257
A34J4	1250-0257	1		CONNECTOR-RF SMB M PC 50-OHM	28480	1250-0257
A34L1	9100-2891	4	10	INDUCTOR RF-CH-MLD 50NH 10%	28480	9100-2891
A34L2	9100-2891	4		INDUCTOR RF-CH-MLD 50NH 10%	28480	9100-2891
A34L3	9100-2891	4		INDUCTOR RF-CH-MLD 50NH 10%	28480	9100-2891
A34L4	9100-2891	4		INDUCTOR RF-CH-MLD 50NH 10%	28480	9100-2891
A34L5	9100-2891	4		INDUCTOR RF-CH-MLD 50NH 10%	28480	9100-2891

*** Indicates factory selected value.**

Table 1. A34 Replaceable Parts (2 of 3)

Reference Designator	HP Part Number	C D	Qty.	Description	Mfr Code	Mfr Part Number
A34L6	9100-2891	4		INDUCTOR RF-CH-MLD 50NH 10%	28480	9100-2891
A34L7	9100-2891	4		INDUCTOR RF-CH-MLD 50NH 10%	28480	9100-2891
A34L8	9100-2891	4		INDUCTOR RF-CH-MLD 50NH 10%	28480	9100-2891
A34L9	9140-0114	4	10	INDUCTOR RF-CH-MLD 10UH 10%	28480	9140-0114
A34L10	9100-2891	4		INDUCTOR RF-CH-MLD 50NH 10%	28480	9100-2891
A34L11	9140-0114	4		INDUCTOR RF-CH-MLD 10UH 10%	28480	9140-0114
A34L12	9140-0114	4		INDUCTOR RF-CH-MLD 10UH 10%	28480	9140-0114
A34L13	9100-2891	4		INDUCTOR RF-CH-MLD 50NH 10%	28480	9100-2891
A34L14	9140-0114	4		INDUCTOR RF-CH-MLD 10UH 10%	28480	9140-0114
A34L15	9140-0114	4		INDUCTOR RF-CH-MLD 10UH 10%	28480	9140-0114
A34L16	9100-3551	5	2	INDUCTOR RF-CH-MLD 1UH 5%	28480	9100-3551
A34L17	9140-0114	4		INDUCTOR RF-CH-MLD 10UH 10%	28480	9140-0114
A34L18	9140-0114	4		INDUCTOR RF-CH-MLD 10UH 10%	28480	9140-0114
A34L19	9140-0114	4		INDUCTOR RF-CH-MLD 10UH 10%	28480	9140-0114
A34L20	9100-2486	3	2	INDUCTOR RF-CH-MLD 330NH 5%	28480	9100-2486
A34L21	9100-2486	3		INDUCTOR RF-CH-MLD 330NH 5%	28480	9100-2486
A34L22	9140-0114	4		INDUCTOR RF-CH-MLD 10UH 10%	28480	9140-0114
A34L23	9140-0114	4		INDUCTOR RF-CH-MLD 10UH 10%	28480	9140-0114
A34L24	9100-3551	5		INDUCTOR RF-CH-MLD 1UH 5%	28480	9100-3551
A34L25	9100-3911	1	2	INDUCTOR RF-CH-MLD 220NH 5%	28480	9100-3911
A34L26	9100-3911	1		INDUCTOR RF-CH-MLD 220NH 5%	28480	9100-3911
A34MP1	04195-00676		1	PLATE SHIELD		
A34MP2	04195-00681		1	PLATE SHIELD		
A34MP3	04195-00675		1	PLATE SHIELD		
A34Q1	1853-0460	6	2	TRANSISTOR PNP SI PD=180MW FT=4GHZ	28480	1853-0460
A34Q2	1854-0632	6	2	TRANSISTOR NPN SI PD=180MW FT=4GHZ	25403	BFR91
A34Q3	1853-0460	6		TRANSISTOR PNP SI PD=180MW FT=4GHZ	28480	1853-0460
A34Q4	1854-0632	6		TRANSISTOR NPN SI PD=180MW FT=4GHZ	25403	BFR91
A34Q5	1854-0810	2	2	TRANSISTOR NPN SI PD=625MW FT=200MHZ	28480	1854-0810
A34Q6	1853-0459	3	2	TRANSISTOR PNP SI PD=625MW FT=200MHZ	28480	1853-0459
A34Q7	1854-0810	2		TRANSISTOR NPN SI PD=625MW FT=200MHZ	28480	1854-0810
A34Q8	1853-0459	3		TRANSISTOR PNP SI PD=625MW FT=200MHZ	28480	1853-0459
A34Q9	1854-0720	3	2	TRANSISTOR NPN SI PD=500MW FT=4GHZ	28480	1854-0720
A34Q10	1854-0720	3		TRANSISTOR NPN SI PD=500MW FT=4GHZ	28480	1854-0720
A34R1	0757-0398	4	4	RESISTOR 75 1% .125W F TC=0+-100	24546	CT4-1/8-T0-75R0-F
A34R2	0698-3438	3	8	RESISTOR 147 1% .125W F TC=0+-100	24546	CT4-1/8-T0-147R-F
A34R3	0698-4418	1	6	RESISTOR 205 1% .125W F TC=0+-100	24546	CT4-1/8-T0-205R-F
A34R4	0698-7202	7	8	RESISTOR 38.3 1% .05W F TC=0+-100	24546	C3-1/8-T0-38R3-F
A34R5	0698-7202	7		RESISTOR 38.3 1% .05W F TC=0+-100	24546	C3-1/8-T0-38R3-F
A34R6	0698-3438	3		RESISTOR 147 1% .125W F TC=0+-100	24546	CT4-1/8-T0-147R-F
A34R7	0698-7202	7		RESISTOR 38.3 1% .05W F TC=0+-100	24546	C3-1/8-T0-38R3-F
A34R8	0698-7202	7		RESISTOR 38.3 1% .05W F TC=0+-100	24546	C3-1/8-T0-38R3-F
A34R9	0698-3438	3		RESISTOR 147 1% .125W F TC=0+-100	24546	CT4-1/8-T0-147R-F
A34R10	0698-4418	1		RESISTOR 205 1% .125W F TC=0+-100	24546	CT4-1/8-T0-205R-F
A34R11	0757-0398	4		RESISTOR 75 1% .125W F TC=0+-100	24546	CT4-1/8-T0-75R0-F
A34R12	0757-0398	4		RESISTOR 75 1% .125W F TC=0+-100	24546	CT4-1/8-T0-75R0-F
A34R13	0698-3438	3		RESISTOR 147 1% .125W F TC=0+-100	24546	CT4-1/8-T0-147R-F
A34R14	0698-4418	1		RESISTOR 205 1% .125W F TC=0+-100	24546	CT4-1/8-T0-205R-F
A34R15	0698-7202	7		RESISTOR 38.3 1% .05W F TC=0+-100	24546	C3-1/8-T0-38R3-F
A34R16	0698-7202	7		RESISTOR 38.3 1% .05W F TC=0+-100	24546	C3-1/8-T0-38R3-F
A34R17	0698-3438	3		RESISTOR 147 1% .125W F TC=0+-100	24546	CT4-1/8-T0-147R-F
A34R18	0698-7202	7		RESISTOR 38.3 1% .05W F TC=0+-100	24546	C3-1/8-T0-38R3-F
A34R19	0698-7202	7		RESISTOR 38.3 1% .05W F TC=0+-100	24546	C3-1/8-T0-38R3-F
A34R20	0698-3438	3		RESISTOR 147 1% .125W F TC=0+-100	24546	CT4-1/8-T0-147R-F

*** Indicates factory selected value.**

Table 1. A34 Replaceable Parts (3 of 3)

Reference Designator	HP Part Number	C D	Qty.	Description	Mfr Code	Mfr Part Number
A34R21	0698-4418	1		RESISTOR 205 1% .125W F TC=0+-100	24546	CT4-1/8-T0-205R-F
A34R22	0757-0398	4		RESISTOR 75 1% .125W F TC=0+-100	24546	CT4-1/8-T0-75R0-F
A34R23	0757-0433	8	2	RESISTOR 3.32K 1% .125W F TC=0+-100	24546	CT4-1/8-T0-3321-F
A34R24	0698-3156	2	4	RESISTOR 14.7K 1% .125W F TC=0+-100	24546	CT4-1/8-T0-1472-F
A34R25	0698-3438	3		RESISTOR 147 1% .125W F TC=0+-100	24546	CT4-1/8-T0-147R-F
A34R26	0698-3439	4	2	RESISTOR 178 1% .125W F TC=0+-100	24546	CT4-1/8-T0-178R-F
A34R27	0698-3441	8	2	RESISTOR 215 1% .125W F TC=0+-100	24546	CT4-1/8-T0-215R-F
A34R28	0698-3435	0	1	RESISTOR 38.3 1% .125W F TC=0+-100	28480	0698-3435
A34R29	0698-3438	3		RESISTOR 147 1% .125W F TC=0+-100	24546	CT4-1/8-T0-147R-F
A34R30	0698-3156	2		RESISTOR 14.7K 1% .125W F TC=0+-100	24546	CT4-1/8-T0-1472-F
A34R31	0698-3153	9	2	RESISTOR 3.83K 1% .125W F TC=0+-100	24546	CT4-1/8-T0-3831-F
A34R32	0698-3495	2	2	RESISTOR 866 1% .125W F TC=0+-100	24546	CT4-1/8-T0-866R-F
A34R33	0698-3495	2		RESISTOR 866 1% .125W F TC=0+-100	24546	CT4-1/8-T0-866R-F
A34R34	0757-0433	8		RESISTOR 3.32K 1% .125W F TC=0+-100	24546	CT4-1/8-T0-3321-F
A34R35	0698-3156	2		RESISTOR 14.7K 1% .125W F TC=0+-100	24546	CT4-1/8-T0-1472-F
A34R36	0698-3488	3	2	RESISTOR 442 1% .125W F TC=0+-100	24546	CT4-1/8-T0-422R-F
A34R37	0757-0295	0	1	RESISTOR 11.5 1% .125W F TC=0+-100	19701	5033R-1/8-T0-11R5-F
A34R38	0698-3488	3		RESISTOR 442 1% .125W F TC=0+-100	24546	CT4-1/8-T0-422R-F
A34R39	0698-3439	4		RESISTOR 178 1% .125W F TC=0+-100	24546	CT4-1/8-T0-178R-F
A34R40	0698-3441	8		RESISTOR 215 1% .125W F TC=0+-100	24546	CT4-1/8-T0-215R-F
A34R41	0698-3156	2		RESISTOR 14.7K 1% .125W F TC=0+-100	24546	CT4-1/8-T0-1472-F
A34R42	0698-3153	9		RESISTOR 3.83K 1% .125W F TC=0+-100	24546	CT4-1/8-T0-3831-F
A34R43	0757-0346	2	4	RESISTOR 10 1% .125W F TC=0+-100	28480	0757-0346
A34R44	0757-0346	2		RESISTOR 10 1% .125W F TC=0+-100	28480	0757-0346
A34R45	0698-7189	9	6	RESISTOR 11 1% .05W F TC=0+-100	24546	C3-1/8-T0-11R0-F
A34R46	0698-7189	9		RESISTOR 11 1% .05W F TC=0+-100	24546	C3-1/8-T0-11R0-F
A34R47	0698-7189	9		RESISTOR 11 1% .05W F TC=0+-100	24546	C3-1/8-T0-11R0-F
A34R48	0698-4418	1		RESISTOR 205 1% .125W F TC=0+-100	24546	CT4-1/8-T0-205R-F
A34R49	0698-4418	1		RESISTOR 205 1% .125W F TC=0+-100	24546	CT4-1/8-T0-205R-F
A34R50	0698-7189	9		RESISTOR 11 1% .05W F TC=0+-100	24546	C3-1/8-T0-11R0-F
A34R51	0698-7189	9		RESISTOR 11 1% .05W F TC=0+-100	24546	C3-1/8-T0-11R0-F
A34R52	0698-7189	9		RESISTOR 11 1% .05W F TC=0+-100	24546	C3-1/8-T0-11R0-F
A34R53	0757-0346	2		RESISTOR 10 1% .125W F TC=0+-100	28480	0757-0346
A34R54	0757-0346	2		RESISTOR 10 1% .125W F TC=0+-100	28480	0757-0346
A34U1	1826-0221	0	1	IC V RGLTR TO-220	04713	MC7912CT
A34U2	1826-0147	9	1	IC 7812 V RGLTR TO-220	04713	MC7812CP
A34W1	8159-0005	0	2	RESISTOR-ZERO OHMS 22 AWG LEAD DIA	28480	8159-0005
A34W2	8159-0005	0		RESISTOR-ZERO OHMS 22 AWG LEAD DIA	28480	8159-0005
A34W3	04195-61663	7	1	WIRE ASSEMBLY 6PIN	28480	04195-61663
A34W4	04195-61683	1	1	CABLE ASSEMBLY (E)	28480	04195-61683
A34W5	04195-61684	2	1	CABLE ASSEMBLY (G)	28480	04195-61684
	04195-00905		1	CASE SHIELD, COMPONENT SIDE		
	04195-00904		1	CASE SHIELD, CIRCUIT SIDE		

*** Indicates factory selected value.**

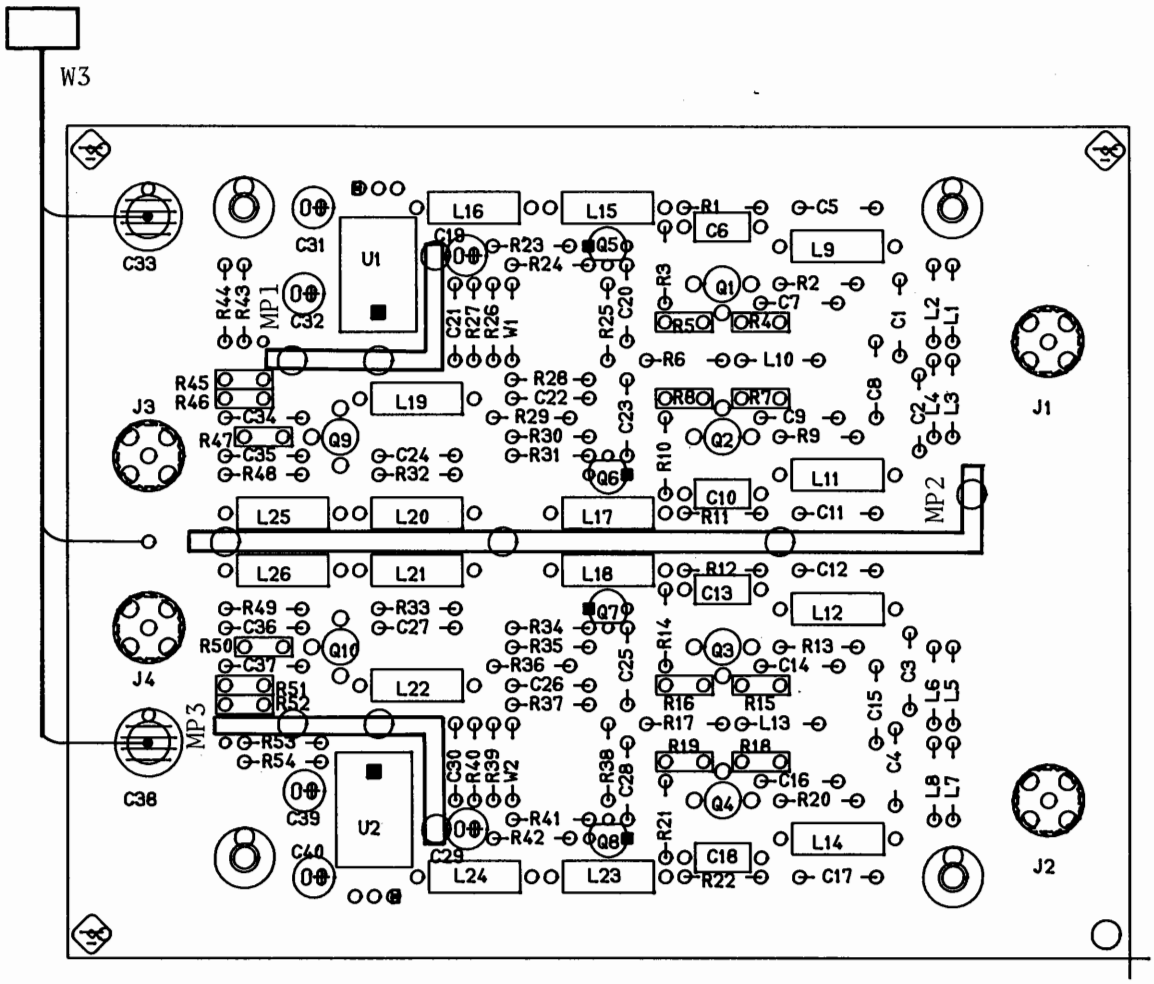

Figure 1. A34 1st IF Local Driver Amplifier Component Locations

A34 1ST IF LOCAL DRIVER AMPLIFIER

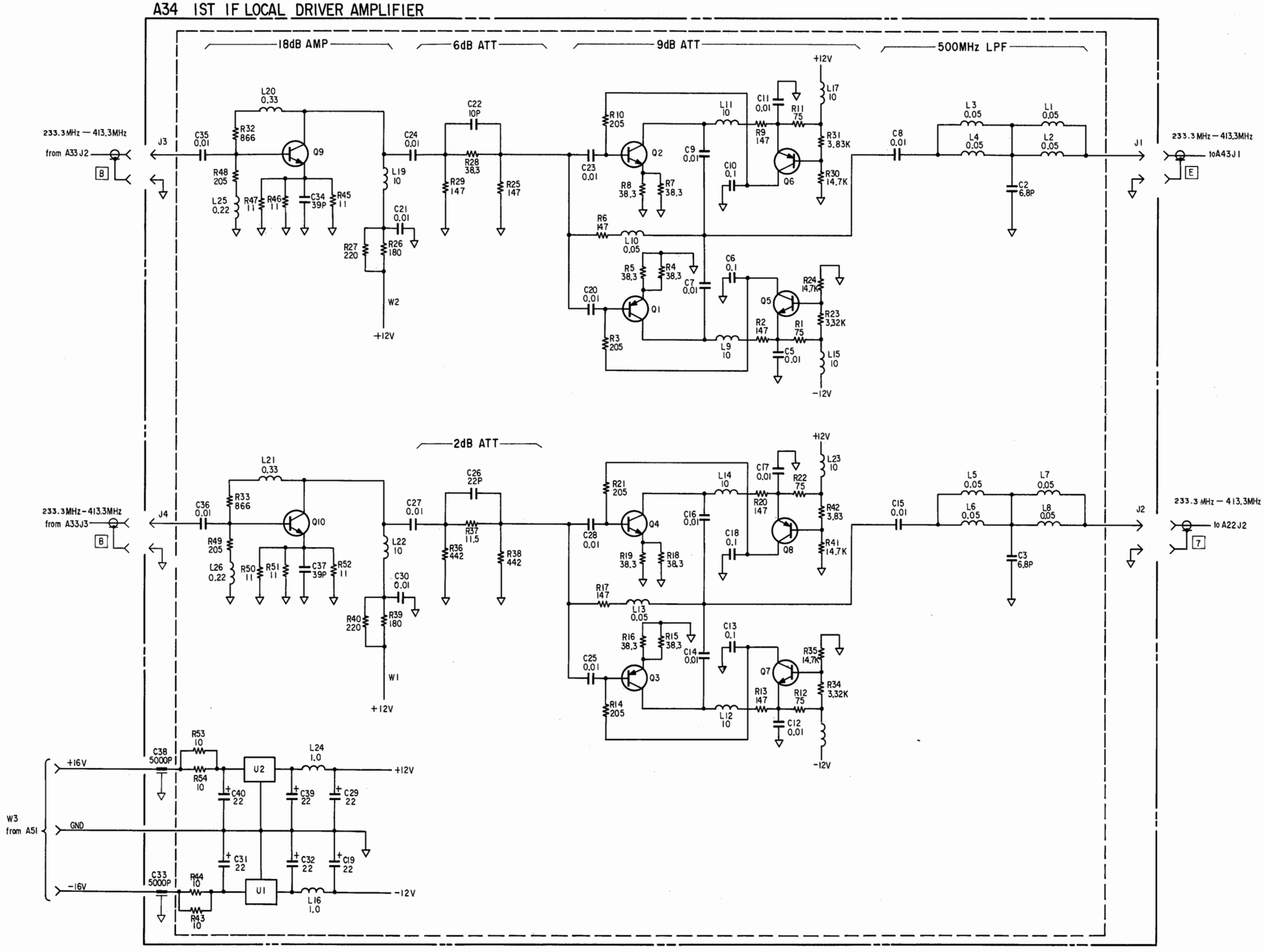

SOURCE 2ND & 3RD IF CONVERTER SERVICE SHEET

The A40 Source Second/Third IF Converter assembly contains two frequency converters for the Signal Source.

The first stage converts the 6.666666667 MHz third IF signal from the amplitude (OSC level) vernier in the A130 Reference Frequency Converter to the 86.666666667 MHz second IF signal. The output of the first stage is split into two parts, one part goes directly the to A43 Source First IF Converter, and the other part goes to A43 through the second stage.

The second stage converts the 86.666666667 MHz second IF signal from the first stage to the 246.666666667 MHz first IF signal. The output of the second stage goes to the A43 Source First IF Converter.

The second stage output is used only when the measurement frequency is less than 150 MHz.

CIRCUIT DESCRIPTION

E1 mixes the 6.666666667 MHz third IF signal from A130 (whose amplitude determines the signal source output level) with the 80 MHz LO signal to produce the 86.666666667 MHz second IF signal.

J5 and W1 of J6 are for adjustment and troubleshooting purposes. For normal operation J5 must be left open and W1 must be set to the N position of J6.

R4, R5, and R6 split the input from the bandpass filter to output the 86.666666667 MHz signal through J2, and to feed the second stage.

E2 mixes the 86.666666667 MHz signal from the first stage with the 160 MHz LO signal to produce the 246.666666667 MHz first IF signal.

TROUBLESHOOTING GUIDE

Refer to the bandpass filter adjustment procedures for troubleshooting the filter and mixer circuits.

Table 1. A40 Replaceable Parts (1 of 4)

Reference Designator	HP Part Number	C D	Qty.	Description	Mfr Code	Mfr Part Number
A40				SOURCE 2ND/3RD IF CONVERTER		
A40	04195-66540	9	1	S-SOURCE 2-3 IF	28480	04195-66540
A40C1	0160-4802	8	6	CAPACITOR-FXD 82PF +-5% 100VDC CER 0+-30	28480	0160-4802
A40C2	0160-4802	8		CAPACITOR-FXD 82PF +-5% 100VDC CER 0+-30	28480	0160-4802
A40C3	0160-4806	2	3	CAPACITOR-FXD 39PF +-5% 100VDC CER 0+-30	28480	0160-4806
A40C4	0160-4802	8		CAPACITOR-FXD 82PF +-5% 100VDC CER 0+-30	28480	0160-4802
A40C5	0160-4802	8		CAPACITOR-FXD 82PF +-5% 100VDC CER 0+-30	28480	0160-4802
A40C6	0160-4806	2		CAPACITOR-FXD 39PF +-5% 100VDC CER 0+-30	28480	0160-4806
A40C7	0160-2236	8	1	CAPACITOR-FXD 1PF +-.25PF 500VDC CER	28480	0160-2236
A40C8	0160-4802	8		CAPACITOR-FXD 82PF +-5% 100VDC CER 0+-30	28480	0160-4802
A40C9	0160-4803	9	2	CAPACITOR-FXD 68PF +-5% 100VDC CER 0+-30	28480	0160-4803
A40C10	0160-4804	0	4	CAPACITOR-FXD 56PF +-5% 100VDC CER 0+-30	28480	0160-4804
A40C11	0160-4799	2	14	CAPACITOR-FXD 2.2PF +-.25PF 100VDC CER	28480	0160-4799
A40C12	0160-4798	1	2	CAPACITOR-FXD 2.7PF +-.25PF 100VDC CER	28480	0160-4798
A40C13	0160-4795	8	8	CAPACITOR-FXD 4.7PF +-.5PF 100VDC CER	28480	0160-4795
A40C14	0160-4796	9	4	CAPACITOR-FXD 3.9PF +-.25PF 100VDC CER	28480	0160-4796
A40C15	0160-4799	2		CAPACITOR-FXD 2.2PF +-.25PF 100VDC CER	28480	0160-4799
A40C16	0160-4795	8		CAPACITOR-FXD 4.7PF +-.5PF 100VDC CER	28480	0160-4795
A40C17	0160-4795	8		CAPACITOR-FXD 4.7PF +-.5PF 100VDC CER	28480	0160-4795
A40C18	0160-4799	2		CAPACITOR-FXD 2.2PF +-.25PF 100VDC CER	28480	0160-4799
A40C19	0160-4799	2		CAPACITOR-FXD 2.2PF +-.25PF 100VDC CER	28480	0160-4799
A40C20	0160-4799	2		CAPACITOR-FXD 2.2PF +-.25PF 100VDC CER	28480	0160-4799
A40C21	0160-4809	5	2	CAPACITOR-FXD 390PF +-5% 100VDC CER	28480	0160-4809
A40C22	0160-4825	5	1	CAPACITOR-FXD 560PF +-5% 100VDC CER	28480	0160-4825
A40C23	0160-4809	5		CAPACITOR-FXD 390PF +-5% 100VDC CER	28480	0160-4809
A40C24	0160-6561	0	7	CAPACITOR-FXD .1UF +-20% 50VDC CER	16299	CAC02Z5U104M050A
A40C25	0160-6561	0		CAPACITOR-FXD .1UF +-20% 50VDC CER	16299	CAC02Z5U104M050A
A40C26	0160-6561	0		CAPACITOR-FXD .1UF +-20% 50VDC CER	16299	CAC02Z5U104M050A
A40C27	0160-4799	2		CAPACITOR-FXD 2.2PF +-.25PF 100VDC CER	28480	0160-4799
A40C28	0160-4806	2		CAPACITOR-FXD 39PF +-5% 100VDC CER 0+-30	28480	0160-4806
A40C29	0160-4804	0		CAPACITOR-FXD 56PF +-5% 100VDC CER 0+-30	28480	0160-4804
A40C30	0160-4802	8		CAPACITOR-FXD 82PF +-5% 100VDC CER 0+-30	28480	0160-4802
A40C31	0160-4803	9		CAPACITOR-FXD 68PF +-5% 100VDC CER 0+-30	28480	0160-4803
A40C32	0160-2437	1	2	CAPACITOR-FDTHRU 5000PF +80 -20% 200V	28480	0160-2437
	2580-0006	8	2	NUT-HEX	28480	2580-0006
	8150-3490	5	2	WIRE	28480	8150-3490
A40C33	0160-4805	1	3	CAPACITOR-FXD 47PF +-5% 100VDC CER 0+-30	28480	0160-4805
A40C34	0160-4804	0		CAPACITOR-FXD 56PF +-5% 100VDC CER 0+-30	28480	0160-4804
A40C35	0160-4789	0	2	CAPACITOR-FXD 15PF +-5% 100VDC CER 0+-30	28480	0160-4789
A40C36	0160-4799	2		CAPACITOR-FXD 2.2PF +-.25PF 100VDC CER	28480	0160-4799
A40C37	0160-4799	2		CAPACITOR-FXD 2.2PF +-.25PF 100VDC CER	28480	0160-4799
A40C38	0160-4796	9		CAPACITOR-FXD 3.9PF +-.25PF 100VDC CER	28480	0160-4796
A40C39	0160-4799	2		CAPACITOR-FXD 2.2PF +-.25PF 100VDC CER	28480	0160-4799
A40C40	0160-4795	8		CAPACITOR-FXD 4.7PF +-.5PF 100VDC CER	28480	0160-4795
A40C41	0160-4795	8		CAPACITOR-FXD 4.7PF +-.5PF 100VDC CER	28480	0160-4795
A40C42	0160-4799	2		CAPACITOR-FXD 2.2PF +-.25PF 100VDC CER	28480	0160-4799
A40C43	0160-4798	1		CAPACITOR-FXD 2.7PF +-.25PF 100VDC CER	28480	0160-4798
A40C44	0160-6561	0		CAPACITOR-FXD .1UF +-20% 50VDC CER	16299	CAC02Z5U104M050A
A40C45	0160-6561	0		CAPACITOR-FXD .1UF +-20% 50VDC CER	16299	CAC02Z5U104M050A
A40C46	0160-4795	8		CAPACITOR-FXD 4.7PF +-.5PF 100VDC CER	28480	0160-4795
A40C47	0160-4795	8		CAPACITOR-FXD 4.7PF +-.5PF 100VDC CER	28480	0160-4795
A40C48	0160-4799	2		CAPACITOR-FXD 2.2PF +-.25PF 100VDC CER	28480	0160-4799
A40C49	0160-4799	2		CAPACITOR-FXD 2.2PF +-.25PF 100VDC CER	28480	0160-4799
A40C50	0180-3363	6	6	CAPACITOR-FXD 22UF+-20% 25VDC AL	28480	0180-3363

*** Indicates factory selected value.**

Table 1. A40 Replaceable Parts (2 of 4)

Reference Designator	HP Part Number	C D	Qty.	Description	Mfr Code	Mfr Part Number
A40C51	0160-4805	1		CAPACITOR-FXD 47PF +-5% 100VDC CER 0+-30	28480	0160-4805
A40C52	0160-6561	0		CAPACITOR-FXD .1UF +-20% 50VDC CER	16299	CAC02Z5U104M050A
A40C53	0160-6561	0		CAPACITOR-FXD .1UF +-20% 50VDC CER	16299	CAC02Z5U104M050A
A40C54	0180-3363	6		CAPACITOR-FXD 22UF+-20% 25VDC AL	28480	0180-3363
A40C55	0180-3363	6		CAPACITOR-FXD 22UF+-20% 25VDC AL	28480	0180-3363
A40C56	0180-3363	6		CAPACITOR-FXD 22UF+-20% 25VDC AL	28480	0180-3363
A40C57	0160-4796	9		CAPACITOR-FXD 3.9PF +-.25PF 100VDC CER	28480	0160-4796
A40C58	0160-4799	2		CAPACITOR-FXD 2.2PF +-.25PF 100VDC CER	28480	0160-4799
A40C59	0160-4789	0		CAPACITOR-FXD 15PF +-5% 100VDC CER 0+-30	28480	0160-4789
A40C60	0160-4804	0		CAPACITOR-FXD 56PF +-5% 100VDC CER 0+-30	28480	0160-4804
A40C61	0160-4805	1		CAPACITOR-FXD 47PF +-5% 100VDC CER 0+-30	28480	0160-4805
A40C62	0160-4799	2		CAPACITOR-FXD 2.2PF +-.25PF 100VDC CER	28480	0160-4799
A40C63	0160-4795	8		CAPACITOR-FXD 4.7PF +-.5PF 100VDC CER	28480	0160-4795
A40C64	0160-4796	9		CAPACITOR-FXD 3.9PF +-.25PF 100VDC CER	28480	0160-4796
A40C65	0180-3363	6		CAPACITOR-FXD 22UF+-20% 25VDC AL	28480	0180-3363
A40C66	0180-3363	6		CAPACITOR-FXD 22UF+-20% 25VDC AL	28480	0180-3363
A40C67	0160-2437	1		CAPACITOR-FDTHRU 5000PF +80 -20% 200V	28480	0160-2437
	2580-0006	8		NUT-HEX	28480	2580-0006
	8150-3490	5		WIRE	28480	8150-3490
A40E1	1906-0235	6	2	DIODE	28480	1906-0235
A40E2	1906-0235	6		DIODE	28480	1906-0235
A40J1	1250-0257	1	6	CONNECTOR-RF SMB M PC 50-OHM	28480	1250-0257
A40J2	1250-0257	1		CONNECTOR-RF SMB M PC 50-OHM	28480	1250-0257
A40J3	1250-0257	1		CONNECTOR-RF SMB M PC 50-OHM	28480	1250-0257
A40J4	1250-0257	1		CONNECTOR-RF SMB M PC 50-OHM	28480	1250-0257
A40J5	1250-0257	1		CONNECTOR-RF SMB M PC 50-OHM	28480	1250-0257
A40J6	1251-4822	6	1	CONN-POST TYPE .100-PIN-SPCG 3-CONT	28480	1251-4822
A40J7	1250-0257	1		CONNECTOR-RF SMB M PC 50-OHM	28480	1250-0257
A40L1	9140-1303	5	2	COIL-VAR 73NH-111NH Q=80 PC-MTG	S4218	3502AN-4000014
A40L2	9140-1303	5		COIL-VAR 73NH-111NH Q=80 PC-MTG	S4218	3502AN-4000014
A40L3	9140-1302	4	3	COIL-VAR 54NH-79NH Q=80 PC-MTG	S4218	E502AN-3000013
A40L4	9140-1302	4		COIL-VAR 54NH-79NH Q=80 PC-MTG	S4218	E502AN-3000013
A40L5	9140-1301	3	5	COIL-VAR 39NH-52NH Q=80 PC-MTG	S4218	E502AN-2000012
A40L6	9140-1301	3		COIL-VAR 39NH-52NH Q=80 PC-MTG	S4218	E502AN-2000012
A40L7	9140-0098	3	2	INDUCTOR RF-CH-MLD 2.2UH 10%	28480	9140-0098
A40L8	9140-0098	3		INDUCTOR RF-CH-MLD 2.2UH 10%	28480	9140-0098
A40L9	9140-1302	4		COIL-VAR 54NH-79NH Q=80 PC-MTG	S4218	E502AN-3000013
A40L10	9140-1304	6	2	COIL-VAR 159NH-264NH Q=65 PC-MTG	S4218	E502-AN-8000019
A40L11	9140-1301	3		COIL-VAR 39NH-52NH Q=80 PC-MTG	S4218	E502AN-2000012
A40L12	9140-1301	3		COIL-VAR 39NH-52NH Q=80 PC-MTG	S4218	E502AN-2000012
A40L13	9100-0539	3	2	INDUCTOR (MISC ITEM)	28480	9100-0539
A40L14	9100-0539	3		INDUCTOR (MISC ITEM)	28480	9100-0539
A40L15	9140-0158	6	2	INDUCTOR RF-CH-MLD 1UH 10%	28480	9140-0158
A40L16	9140-1304	6		COIL-VAR 159NH-264NH Q=65 PC-MTG	S4218	E502-AN-8000019
A40L17	9140-1301	3		COIL-VAR 39NH-52NH Q=80 PC-MTG	S4218	E502AN-2000012
A40L18	9140-0158	6		INDUCTOR RF-CH-MLD 1UH 10%	28480	9140-0158
A40L19-A40L30				NOT ASSIGNED		
A40L31	9100-2891	4	1	INDUCTOR RF-CH-MLD 50NH 10%	28480	9100-2891
A40MP1	04195-00674		3	PLATE SHIELD		
A40MP2	04195-00674			PLATE SHIELD		
A40MP3	04195-00674			PLATE SHIELD		

*** Indicates factory selected value.**

Table 1. A40 Replaceable Parts (3 of 4)

Reference Designator	HP Part Number	C D	Qty.	Description	Mfr Code	Mfr Part Number
A40Q1	1854-1073	1	2	TRANSISTOR NPN SI PD=600MW FT=6.5GHZ	28480	1854-1073
	9170-0029	3	2	CORE-SHIELDING BEAD	28480	9170-0029
A40Q2	1854-1073	1		TRANSISTOR NPN SI PD=600MW FT=6.5GHZ	28480	1854-1073
	9170-0029	3		CORE-SHIELDING BEAD	28480	9170-0029
A40R1	0698-3438	3	2	RESISTOR 147 1% .125W F TC=0+-100	24546	CT4-1/8-T0-147R-F
A40R2	0698-3435	0	1	RESISTOR 38.3 1% .125W F TC=0+-100	28480	0698-3435
A40R3	0698-3438	3		RESISTOR 147 1% .125W F TC=0+-100	24546	CT4-1/8-T0-147R-F
A40R4	0698-3432	7	1	RESISTOR 26.1 1% .125W F TC=0+-100	03888	PME55-1/8-T0-26R1-F
A40R5	0757-0382	6	1	RESISTOR 16.2 1% .125W F TC=0+-100	19701	5033R-1/8-T0-16R2-F
A40R6	0698-3430	5	1	RESISTOR 21.5 1% .125W F TC=0+-100	03888	PME55-1/8-T0-21R5-F
A40R7	0757-0294	9	2	RESISTOR 17.8 1% .125W F TC=0+-100	19701	5033R-1/8-T0-17R8-F
A40R8	0698-3443	0	5	RESISTOR 287 1% .125W F TC=0+-100	24546	CT4-1/8-T0-287R-F
A40R9	0757-0421	4	4	RESISTOR 825 1% .125W F TC=0+-100	24546	CT4-1/8-T0-825R-F
A40R10	0683-0475	1	1	RESISTOR 4.7 5% .25W CF TC=0-400	01121	CB47G5
A40R11	0757-0421	4		RESISTOR 825 1% .125W F TC=0+-100	24546	CT4-1/8-T0-825R-F
A40R12	0698-3132	4	2	RESISTOR 261 1% .125W F TC=0+-100	24546	CT4-1/8-T0-2610-F
A40R13	0698-3443	0		RESISTOR 287 1% .125W F TC=0+-100	24546	CT4-1/8-T0-287R-F
A40R14	2100-3383	4	1	RESISTOR-TRMR 50 10% C TOP-ADJ 1-TRN	28480	2100-3383
A40R15	0757-0416	7	1	RESISTOR 511 1% .125W F TC=0+-100	24546	CT4-1/8-T0-511R-F
A40R16	0698-3132	4		RESISTOR 261 1% .125W F TC=0+-100	24546	CT4-1/8-T0-2610-F
A40R17	0698-3439	4	1	RESISTOR 178 1% .125W F TC=0+-100	24546	CT4-1/8-T0-178R-F
A40R18	0698-0082	7	5	RESISTOR 464 1% .125W F TC=0+-100	24546	CT4-1/8-T0-4640-F
A40R19	0698-0082	7		RESISTOR 464 1% .125W F TC=0+-100	24546	CT4-1/8-T0-4640-F
A40R20	0757-0420	3	1	RESISTOR 750 1% .125W F TC=0+-100	24546	CT4-1/8-T0-751-F
A40R21	0698-3443	0		RESISTOR 287 1% .125W F TC=0+-100	24546	CT4-1/8-T0-287R-F
A40R22	0757-0294	9		RESISTOR 17.8 1% .125W F TC=0+-100	19701	5033R-1/8-T0-17R8-F
A40R23	0698-3443	0		RESISTOR 287 1% .125W F TC=0+-100	24546	CT4-1/8-T0-287R-F
A40R24	0698-3443	0		RESISTOR 287 1% .125W F TC=0+-100	24546	CT4-1/8-T0-287R-F
A40R25	0757-0401	0	2	RESISTOR 100 1% .125W F TC=0+-100	24546	CT4-1/8-T0-101-F
A40R26	0757-0401	0		RESISTOR 100 1% .125W F TC=0+-100	24546	CT4-1/8-T0-101-F
A40R27	0698-0082	7		RESISTOR 464 1% .125W F TC=0+-100	24546	CT4-1/8-T0-4640-F
A40R28	0757-0379	1	3	RESISTOR 12.1 1% .125W F TC=0+-100	19701	5033R-1/8-T0-12R1-F
A40R29	0698-0082	7		RESISTOR 464 1% .125W F TC=0+-100	24546	CT4-1/8-T0-4640-F
A40R30	0757-0395	1	1	RESISTOR 56.2 1% .125W F TC=0+-100	24546	CT4-1/8-T0-56R2-F
A40R31	0757-0277	8	1	RESISTOR 49.9 1% .125W F TC=0+-100	28480	0757-0277
A40R32	0757-1094	9	1	RESISTOR 1.47K 1% .125W F TC=0+-100	24546	CT4-1/8-T0-1471-F
A40R33	0757-0403	2	2	RESISTOR 121 1% .125W F TC=0+-100	24546	CT4-1/8-T0-121R-F
A40R34	0757-0403	2		RESISTOR 121 1% .125W F TC=0+-100	24546	CT4-1/8-T0-121R-F
A40R35	0698-3428	1	1	RESISTOR 14.7 1% .125W F TC=0+-100	03888	PME55-1/8-T0-14R7-F
A40R36	0757-0418	9	2	RESISTOR 619 1% .125W F TC=0+-100	24546	CT4-1/8-T0-619R-F
A40R37	0757-0418	9		RESISTOR 619 1% .125W F TC=0+-100	24546	CT4-1/8-T0-619R-F
A40R38	0757-0379	1		RESISTOR 12.1 1% .125W F TC=0+-100	19701	5033R-1/8-T0-12R1-F
A40R39	0757-0346	2	1	RESISTOR 10 1% .125W F TC=0+-100	28480	0757-0346
A40R40- A40R42				NOT ASSIGNED		
A40R43	0683-0335	2	1	RESISTOR 3.3 5% .25W CF TC=0-400	01121	CB33G5
A40R44- A40R50				NOT ASSIGNED		
A40R51	0698-0082	7		RESISTOR 464 1% .125W F TC=0+-100	24546	CT4-1/8-T0-4640-F
A40U1	1826-1311	1	1	IC RF/IF AMPL WB 4-DIP-P PKG	28480	1826-1311
A40U2	1826-0147	9	2	IC 7812 V RGLTR TO-220	04713	MC7812CP
A40U3	1826-0147	9		IC 7812 V RGLTR TO-220	04713	MC7812CP

*** Indicates factory selected value.**

Table 1. A40 Replaceable Parts (4 of 4)

Reference Designator	HP Part Number	C D	Qty.	Description	Mfr Code	Mfr Part Number
A40W1	1258-0141	8	1	JUMPER-REMOVABLE FOR 0.025 IN SQ PINS	28480	1258-0141
A40W2	04195-61664	8	1	WIRE ASSEMBLY 3PIN	28480	04195-61664
	9170-0029	3	2	CORE-SHIELDING BEAD	28480	9170-0029
	04195-00663		1	CASE SHIELD, COMPONENT SIDE (CENTER)		
	04195-00669		1	CASE SHIELD, CIRCUIT SIDE (CENTER)		
	04195-00654		1	CASE SHIELD, COMPONENT SIDE		
	04195-00655		1	CASE SHIELD, CIRCUIT SIDE		

*** Indicates factory selected value.**

NOTES

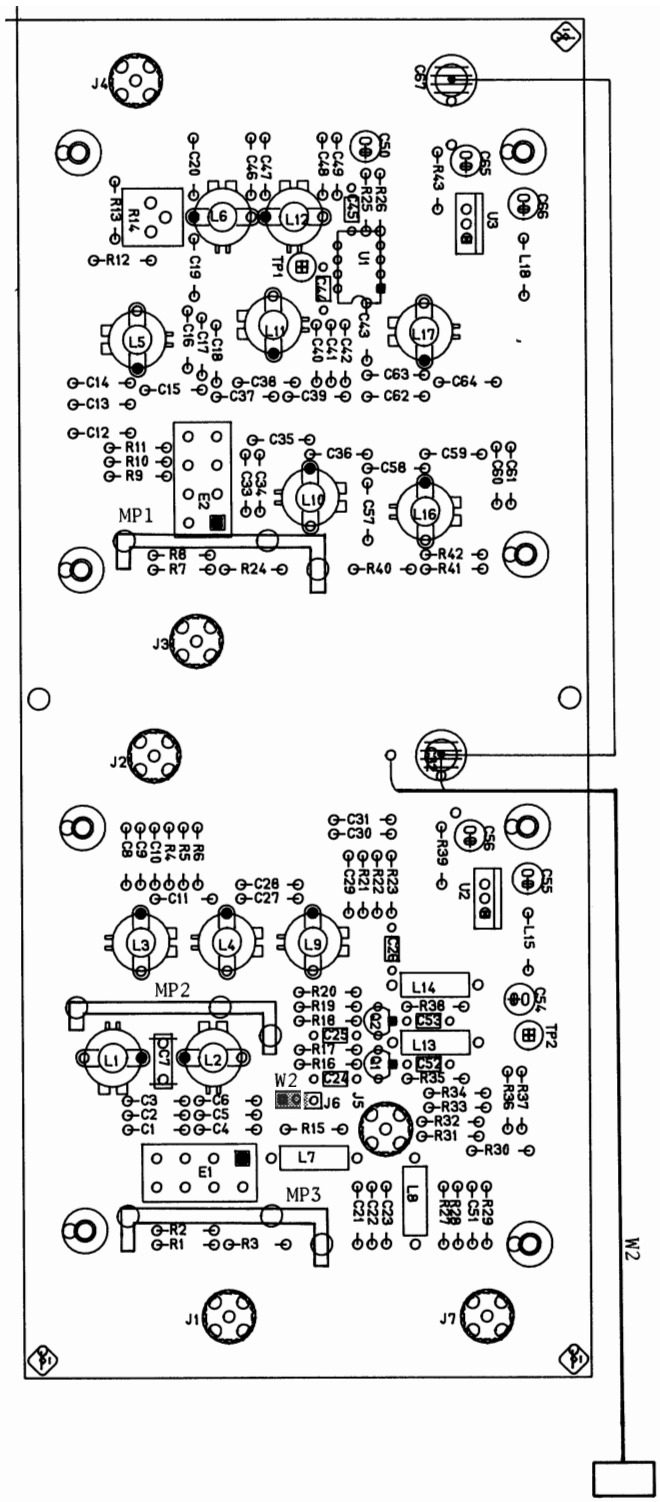

Figure 1. A40 Source 2nd/3rd IF Converter Component Locations

A40 SOURCE 2nd/3rd IF CONVERTER

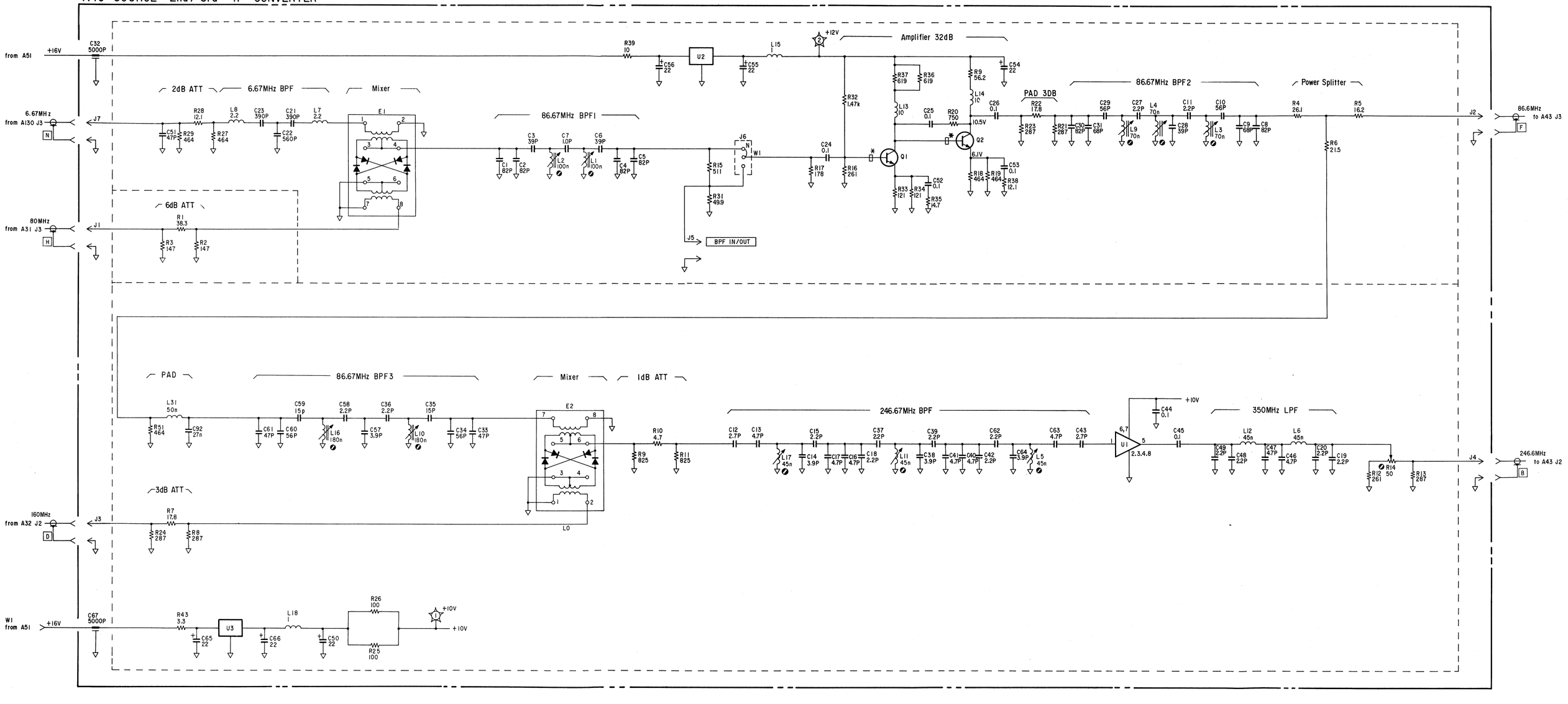

NOTES:

1. REFERENCE DESIGNATORS WITHIN THIS ASSEMBLY ARE ABBREVIATED. PREFIX ABBREVIATION WITH ASSEMBLY NUMBER FOR COMPLETE REFERENCE DESIGNATOR.

2. UNLESS OTHERWISE INDICATED:

   RESISTANCE IN OHMS (Ω)
   CAPACITANCE IN MICROFARADS (μF)
   INDUCTANCE IN MICROHENRIES (μH)

3. ADJUSTMENT NAMES

A40L1	86.6 MHz BPF1 ADJ
A40L2	86.6 MHz BPF1 ADJ
A40L3	86.6 MHz BPF2 ADJ
A40L4	86.6 MHz BPF2 ADJ
A40L5	246 MHz BPF ADJ
A40L9	86.6 MHz BPF2 ADJ
A40L10	86.6 MHz BPF3 ADJ
A40L11	246 MHz BPF ADJ
A40L16	86.6 MHz BPF3 ADJ
A40L17	246 MHz BPF ADJ
A40R14	2ND IF GAIN ADJ

SOURCE 1ST IF CONVERTER SERVICE SHEET

The A43 Source 1st IF Converter board converts the IF frequency signal from A40 to the source output frequency. The IF signal from the A40 board has amplitude information of the signal source.

CIRCUIT DESCRIPTION

When the measurement frequency is < 150 MHz, the OUT-IFI-LF signal is a positive voltage and the OUT-IFI-HF signal is a negative voltage, so diode switches CR2 and CR3 routes the 246.666666667 MHz signal to the mixer. When the measurement frequency is ≥ 150 MHz, the OUT-IFI-HF signal is a positive voltage and the OUT-IFI-LF signal is a negative voltage, so diode switches CR6 and CR4 route the 86.666666667 MHz signal to the mixer.

E1 mixes the selected IF signals with the LO OSC signal (originating from the fractional N PLL) to produce the signal source output signal. The following table shows the relationships between the measurement frequency and the VCO (PLL) frequency.

Measurement Frequency	VCO Frequency
F < 150 MHz	Meas. Freq. + 246.666 666 666 MHz
150 MHz ≤ F < 320 MHz	Meas. Freq. + 86.666 666 666 MHz
320 MHz ≤ F ≤ 500 MHz	Meas. Freq. - 86.666 666 666 MHz

The mixed signal is feed simultaneously to two amplifiers. Q2, Q3, and their associated components form an HF amplifier which is used when the measurement frequency is ≥ 10 MHz. U1 and its associated components form an LF amplifier which is used when the measurement frequency is < 10 MHz.

HF AMPLIFIER

Q2 and Q3 are used to amplify the higher frequency signals (10 MHz to 500 MHz). Q1 and Q4 are used in a negative feedback configuration to stabilize the respective dc collector currents of Q2 and Q3. For example, Q3's collector current is set by the fixed current feed into the base of Q4 which acts as an error amplifier/bias current driver, and by the associated components around Q4 and Q3. If some disturbance causes Q3's dc collector current to increase, there will be a corresponding decrease in Q4's emitter voltage which will decrease Q4's emitter current, thus in turn decreasing the bias current into Q3's base until Q3's dc collector current/Q4's emitter voltage reaches a state of equalization again.

LF AMPLIFIER

U1 amplifies the lower frequency signals (10 Hz to < 10 MHz). U2A integrates the output of U1 and feeds it back to the input of U1 to reduce the dc offset of U1's output to minimizes the dc offset voltage.

When the **S1** output is selected and the measurement frequency is < 10 MHz, OUT-S1-LF is a positive voltage and OUT-S2-LF is a negative voltage. This causes Q10, Q12 and Q8 to turn ON, and Q7, Q9, and Q11 to turn OFF, connecting the LF Amplifier output to A46 and disconnecting the output from A45.

U2B is a unity gain phase inverter amplifier. When Q10 and Q12 are ON, the collector-base voltage of Q6 compensates for the collector-base voltage of Q10 and Q12. As a results, U2B supplies the same quantity of current as the sum of Q10's and Q12's base-to-collector currents, thus minimizing any dc offset voltage that may be caused at the LF amplifier output and at the inputs of the next stage.

When these transistors are turned ON, dc current flows through the collector-base circuit, but only ac current flows through emitter circuit. It maybe easy to understand by considering the emitters as collectors, and the collectors as emitters.

Table 1. A43 Replaceable Parts (1 of 4)

Reference Designator	HP Part Number	C D	Qty.	Description	Mfr Code	Mfr Part Number
A43				SOURCE 1ST IF CONVERTER		
A43	04195-66543	2	1	S-SOURCE 1ST IF	28480	04195-66543
A43C1	0160-4795	8	2	CAPACITOR-FXD 4.7PF +-.5PF 100VDC CER	28480	0160-4795
A43C2	0160-4795	8		CAPACITOR-FXD 4.7PF +-.5PF 100VDC CER	28480	0160-4795
A43C3	0160-4830	2	2	CAPACITOR-FXD 2200PF +-10% 100VDC CER	28480	0160-4830
A43C4	0160-4830	2		CAPACITOR-FXD 2200PF +-10% 100VDC CER	28480	0160-4830
A43C5	0160-6561	0	17	CAPACITOR-FXD .1UF +-20% 50VDC CER	16299	CAC02Z5U104M050A
A43C6	0160-2437	1	6	CAPACITOR-FDTHRU 5000PF +80 -20% 200V	28480	0160-2437
	2580-0006	8	6	NUT-HEX	28480	2580-0006
	8150-3490	5	6	WIRE	28480	8150-3490
A43C7	0160-6561	0		CAPACITOR-FXD .1UF +-20% 50VDC CER	16299	CAC02Z5U104M050A
A43C8	0160-4804	0	2	CAPACITOR-FXD 56PF +-5% 100VDC CER 0+-30	28480	0160-4804
A43C9	0160-4803	9	2	CAPACITOR-FXD 68PF +-5% 100VDC CER 0+-30	28480	0160-4803
A43C10	0160-4788	9	2	CAPACITOR-FXD 18PF +-5% 100VDC CER 0+-30	28480	0160-4788
A43C11	0160-2437	1		CAPACITOR-FDTHRU 5000PF +80 -20% 200V	28480	0160-2437
	2580-0006	8		NUT-HEX	28480	2580-0006
	8150-3490	5		WIRE	28480	8150-3490
A43C12	0160-4799	2	3	CAPACITOR-FXD 2.2PF +-.25PF 100VDC CER	28480	0160-4799
A43C13	0160-4799	2		CAPACITOR-FXD 2.2PF +-.25PF 100VDC CER	28480	0160-4799
A43C14	0160-4803	9		CAPACITOR-FXD 68PF +-5% 100VDC CER 0+-30	28480	0160-4803
A43C15	0160-4804	0		CAPACITOR-FXD 56PF +-5% 100VDC CER 0+-30	28480	0160-4804
A43C16	0160-4788	9		CAPACITOR-FXD 18PF +-5% 100VDC CER 0+-30	28480	0160-4788
A43C17	0160-4799	2		CAPACITOR-FXD 2.2PF +-.25PF 100VDC CER	28480	0160-4799
A43C18	0160-6561	0		CAPACITOR-FXD .1UF +-20% 50VDC CER	16299	CAC02Z5U104M050A
A43C19	0160-6561	0		CAPACITOR-FXD .1UF +-20% 50VDC CER	16299	CAC02Z5U104M050A
A43C20	0160-6561	0		CAPACITOR-FXD .1UF +-20% 50VDC CER	16299	CAC02Z5U104M050A
A43C21	0160-6561	0		CAPACITOR-FXD .1UF +-20% 50VDC CER	16299	CAC02Z5U104M050A
A43C22	0160-6561	0		CAPACITOR-FXD .1UF +-20% 50VDC CER	16299	CAC02Z5U104M050A
A43C23	0160-4797	0	1	CAPACITOR-FXD 3.3PF +-.25PF 100VDC CER	28480	0160-4797
A43C24	0160-4831	3	1	CAPACITOR-FXD 4700PF +-10% 100VDC CER	28480	0160-4831
A43C25	0160-6561	0		CAPACITOR-FXD .1UF +-20% 50VDC CER	16299	CAC02Z5U104M050A
A43C26	0160-6561	0		CAPACITOR-FXD .1UF +-20% 50VDC CER	16299	CAC02Z5U104M050A
A43C27	0160-6561	0		CAPACITOR-FXD .1UF +-20% 50VDC CER	16299	CAC02Z5U104M050A
A43C28	0160-6561	0		CAPACITOR-FXD .1UF +-20% 50VDC CER	16299	CAC02Z5U104M050A
A43C29	0180-3363	6	8	CAPACITOR-FXD 22UF+-20% 25VDC AL	28480	0180-3363
A43C30	0160-6561	0		CAPACITOR-FXD .1UF +-20% 50VDC CER	16299	CAC02Z5U104M050A
A43C31	0160-6561	0		CAPACITOR-FXD .1UF +-20% 50VDC CER	16299	CAC02Z5U104M050A
A43C32	0160-6561	0		CAPACITOR-FXD .1UF +-20% 50VDC CER	16299	CAC02Z5U104M050A
A43C33	0160-6561	0		CAPACITOR-FXD .1UF +-20% 50VDC CER	16299	CAC02Z5U104M050A
A43C34	0160-4791	4	1	CAPACITOR-FXD 10PF +-5% 100VDC CER 0+-30	28480	0160-4791
A43C35	0180-3363	6		CAPACITOR-FXD 22UF+-20% 25VDC AL	28480	0180-3363
A43C36	0160-3901	6	1	CAPACITOR-FXD 2.2UF +-20% 25VDC CER	28480	0160-3901
A43C37	0180-3363	6		CAPACITOR-FXD 22UF+-20% 25VDC AL	28480	0180-3363
A43C38	0180-3363	6		CAPACITOR-FXD 22UF+-20% 25VDC AL	28480	0180-3363
A43C39	0180-3363	6		CAPACITOR-FXD 22UF+-20% 25VDC AL	28480	0180-3363
A43C40	0160-2437	1		CAPACITOR-FDTHRU 5000PF +80 -20% 200V	28480	0160-2437
	2580-0006	8		NUT-HEX	28480	2580-0006
	8150-3490	5		WIRE	28480	8150-3490
A43C41	0160-4810	8	1	CAPACITOR-FXD 330PF +-5% 100VDC CER	28480	0160-4810
A43C42	0160-6561	0		CAPACITOR-FXD .1UF +-20% 50VDC CER	16299	CAC02Z5U104M050A
A43C43	0160-2437	1		CAPACITOR-FDTHRU 5000PF +80 -20% 200V	28480	0160-2437
	2580-0006	8		NUT-HEX	28480	2580-0006
	8150-3490	5		WIRE	28480	8150-3490

*** Indicates factory selected value.**

Table 1. A43 Replaceable Parts (2 of 4)

Reference Designator	HP Part Number	C D	Qty.	Description	Mfr Code	Mfr Part Number
A43C44	0160-2437	1		CAPACITOR-FDTHRU 5000PF +80 -20% 200V	28480	0160-2437
	2580-0006	8		NUT-HEX	28480	2580-0006
	8150-3490	5		WIRE	28480	8150-3490
A43C45	0160-6561	0		CAPACITOR-FXD .1UF +-20% 50VDC CER	16299	CAC02Z5U104M050A
A43C46	0180-3363	6		CAPACITOR-FXD 22UF+-20% 25VDC AL	28480	0180-3363
A43C47	0160-2437	1		CAPACITOR-FDTHRU 5000PF +80 -20% 200V	28480	0160-2437
	2580-0006	8		NUT-HEX	28480	2580-0006
	8150-3490	5		WIRE	28480	8150-3490
A43C48	0180-3363	6		CAPACITOR-FXD 22UF+-20% 25VDC AL	28480	0180-3363
A43C49	0180-3363	6		CAPACITOR-FXD 22UF+-20% 25VDC AL	28480	0180-3363
A43CR1	1901-0948	8	6	DIODE-SWITCHING 30V 100MA	28480	1901-0948
A43CR2	1901-0948	8		DIODE-SWITCHING 30V 100MA	28480	1901-0948
A43CR3	1901-0948	8		DIODE-SWITCHING 30V 100MA	28480	1901-0948
A43CR4	1901-0948	8		DIODE-SWITCHING 30V 100MA	28480	1901-0948
A43CR5	1901-0948	8		DIODE-SWITCHING 30V 100MA	28480	1901-0948
A43CR6	1901-0948	8		DIODE-SWITCHING 30V 100MA	28480	1901-0948
A43CR7	1901-0040	1	1	DIODE-SWITCHING 30V 50MA 2NS DO-35	9N171	1N4148
A43CR8	1902-0953	7	4	DIODE-ZNR 6.2V 5% DO-35 PD=.4W TC=+.053%	28480	1902-0953
A43CR9	1902-0953	7		DIODE-ZNR 6.2V 5% DO-35 PD=.4W TC=+.053%	28480	1902-0953
A43CR10	1902-0953	7		DIODE-ZNR 6.2V 5% DO-35 PD=.4W TC=+.053%	28480	1902-0953
A43CR11	1901-0050	3	2	DIODE-SWITCHING 80V 200MA 2NS DO-35	9N171	1N4150
A43CR12	1901-0050	3		DIODE-SWITCHING 80V 200MA 2NS DO-35	9N171	1N4150
A43CR13	1902-0953	7		DIODE-ZNR 6.2V 5% DO-35 PD=.4W TC=+.053%	28480	1902-0953
A43E1	1906-0235	6	1	DIODE	28480	1906-0235
A43J1	1250-0835	1	1	CONNECTOR-RF SMC M PC 50-OHM	28480	1250-0835
A43J2	1250-0257	1	5	CONNECTOR-RF SMB M PC 50-OHM	28480	1250-0257
A43J3	1250-0257	1		CONNECTOR-RF SMB M PC 50-OHM	28480	1250-0257
A43J4	1250-0257	1		CONNECTOR-RF SMB M PC 50-OHM	28480	1250-0257
A43J5	1250-0257	1		CONNECTOR-RF SMB M PC 50-OHM	28480	1250-0257
A43J6	1250-0257	1		CONNECTOR-RF SMB M PC 50-OHM	28480	1250-0257
A43L1	9100-2891	4	2	INDUCTOR RF-CH-MLD 50NH 10%	28480	9100-2891
A43L2	9140-1302	4	1	COIL-VAR 54NH-79NH Q=80 PC-MTG	S4218	E502AN-3000013
A43L3	9100-2891	4		INDUCTOR RF-CH-MLD 50NH 10%	28480	9100-2891
A43L4	9140-1304	6	2	COIL-VAR 159NH-264NH Q=65 PC-MTG	S4218	E502-AN-8000019
A43L5	9140-1304	6		COIL-VAR 159NH-264NH Q=65 PC-MTG	S4218	E502-AN-8000019
A43L6	9100-0539	3	3	INDUCTOR (MISC ITEM)	28480	9100-0539
A43L7	9100-0539	3		INDUCTOR (MISC ITEM)	28480	9100-0539
A43L8	9140-0141	7	2	INDUCTOR RF-CH-MLD 680NH 10%	28480	9140-0141
A43L9	9100-0539	3		INDUCTOR (MISC ITEM)	28480	9100-0539
A43L10	9100-2259	8	2	INDUCTOR RF-CH-MLD 1.5UH 10%	28480	9100-2259
A43L11	9100-2247	4	2	INDUCTOR RF-CH-MLD 100NH 10%	28480	9100-2247
A43L12	9100-2247	4		INDUCTOR RF-CH-MLD 100NH 10%	28480	9100-2247
A43L13	9100-0368	6	1	INDUCTOR RF-CH-MLD 330NH 10%	28480	9100-0368
A43L14	9140-0141	7		INDUCTOR RF-CH-MLD 680NH 10%	28480	9140-0141
A43L15	9100-2259	8		INDUCTOR RF-CH-MLD 1.5UH 10%	28480	9100-2259
A43Q1	1854-0810	2	1	TRANSISTOR NPN SI PD=625MW FT=200MHZ	28480	1854-0810
A43Q2	1853-0460	6	1	TRANSISTOR PNP SI PD=180MW FT=4GHZ	28480	1853-0460
A43Q3	1854-0632	6	1	TRANSISTOR NPN SI PD=180MW FT=4GHZ	25403	BFR91
A43Q4	1853-0459	3	3	TRANSISTOR PNP SI PD=625MW FT=200MHZ	28480	1853-0459
A43Q5	1854-1074	2	6	TRANSISTOR NPN SI PD=200MW FT=.03HZ	28480	1854-1074

*** Indicates factory selected value.**

Table 1. A43 Replaceable Parts (3 of 4)

Reference Designator	HP Part Number	C D	Qty.	Description	Mfr Code	Mfr Part Number
A43Q6	1854-1074	2		TRANSISTOR NPN SI PD=200MW FT=.03HZ	28480	1854-1074
A43Q7	1854-1074	2		TRANSISTOR NPN SI PD=200MW FT=.03HZ	28480	1854-1074
A43Q8	1853-0459	3		TRANSISTOR PNP SI PD=625MW FT=200MHZ	28480	1853-0459
A43Q9	1854-1074	2		TRANSISTOR NPN SI PD=200MW FT=.03HZ	28480	1854-1074
A43Q10	1854-1074	2		TRANSISTOR NPN SI PD=200MW FT=.03HZ	28480	1854-1074
A43Q11	1853-0459	3		TRANSISTOR PNP SI PD=625MW FT=200MHZ	28480	1853-0459
A43Q12	1854-1074	2		TRANSISTOR NPN SI PD=200MW FT=.03HZ	28480	1854-1074
A43R1	0698-3443	0	6	RESISTOR 287 1% .125W F TC=0+-100	24546	CT4-1/8-T0-287R-F
A43R2	0757-0294	9	3	RESISTOR 17.8 1% .125W F TC=0+-100	19701	5033R-1/8-T0-17R8-F
A43R3	0698-3443	0		RESISTOR 287 1% .125W F TC=0+-100	24546	CT4-1/8-T0-287R-F
A43R4	0757-0294	9		RESISTOR 17.8 1% .125W F TC=0+-100	19701	5033R-1/8-T0-17R8-F
A43R5	0698-3443	0		RESISTOR 287 1% .125W F TC=0+-100	24546	CT4-1/8-T0-287R-F
A43R6	0757-0277	8	3	RESISTOR 49.9 1% .125W F TC=0+-100	28480	0757-0277
A43R7	0698-3153	9	20	RESISTOR 3.83K 1% .125W F TC=0+-100	24546	CT4-1/8-T0-3831-F
A43R8	0698-3443	0		RESISTOR 287 1% .125W F TC=0+-100	24546	CT4-1/8-T0-287R-F
A43R9	0698-3153	9		RESISTOR 3.83K 1% .125W F TC=0+-100	24546	CT4-1/8-T0-3831-F
A43R10	0757-0401	0	2	RESISTOR 100 1% .125W F TC=0+-100	24546	CT4-1/8-T0-101-F
A43R11	0698-3153	9		RESISTOR 3.83K 1% .125W F TC=0+-100	24546	CT4-1/8-T0-3831-F
A43R12	0698-3153	9		RESISTOR 3.83K 1% .125W F TC=0+-100	24546	CT4-1/8-T0-3831-F
A43R13	0757-0401	0		RESISTOR 100 1% .125W F TC=0+-100	24546	CT4-1/8-T0-101-F
A43R14	0698-3153	9		RESISTOR 3.83K 1% .125W F TC=0+-100	24546	CT4-1/8-T0-3831-F
A43R15	0698-3153	9		RESISTOR 3.83K 1% .125W F TC=0+-100	24546	CT4-1/8-T0-3831-F
A43R16	0698-3443	0		RESISTOR 287 1% .125W F TC=0+-100	24546	CT4-1/8-T0-287R-F
A43R17	0757-0294	9		RESISTOR 17.8 1% .125W F TC=0+-100	19701	5033R-1/8-T0-17R8-F
A43R18	0698-3443	0		RESISTOR 287 1% .125W F TC=0+-100	24546	CT4-1/8-T0-287R-F
A43R19	0757-0442	9	3	RESISTOR 10K 1% .125W F TC=0+-100	24546	CT4-1/8-T0-1002-F
A43R20	0698-3150	6	2	RESISTOR 2.37K 1% .125W F TC=0+-100	24546	CT4-1/8-T0-2371-F
A43R21	0757-0397	3	2	RESISTOR 68.1 1% .125W F TC=0+-100	24546	CT4-1/8-T0-68R1-F
A43R22	0698-3150	6	2	RESISTOR 2.37K 1% .125W F TC=0+-100	24546	CT4-1/8-T0-2371-F
A43R23	0757-0279	0	2	RESISTOR 3.16K 1% .125W F TC=0+-100	24546	CT4-1/8-T0-3161-F
A43R24	0698-7188	8	2	RESISTOR 10 1% .05W F TC=0+-100	24546	C3-1/8-T0-10R-F
A43R25	0698-7202	7	4	RESISTOR 38.3 1% .05W F TC=0+-100	24546	C3-1/8-T0-38R3-F
A43R26	0698-7202	7		RESISTOR 38.3 1% .05W F TC=0+-100	24546	C3-1/8-T0-38R3-F
A43R27	0757-0277	8		RESISTOR 49.9 1% .125W F TC=0+-100	28480	0757-0277
A43R28	0698-7202	7		RESISTOR 38.3 1% .05W F TC=0+-100	24546	C3-1/8-T0-38R3-F
A43R29	0698-3440	7	1	RESISTOR 196 1% .125W F TC=0+-100	24546	CT4-1/8-T0-196R-F
A43R30	0698-7202	7		RESISTOR 38.3 1% .05W F TC=0+-100	24546	C3-1/8-T0-38R3-F
A43R31	0698-7188	8		RESISTOR 10 1% .05W F TC=0+-100	24546	C3-1/8-T0-10R-F
A43R32	0757-0279	0		RESISTOR 3.16K 1% .125W F TC=0+-100	24546	CT4-1/8-T0-3161-F
A43R33	0757-0416	7	3	RESISTOR 511 1% .125W F TC=0+-100	24546	CT4-1/8-T0-511R-F
A43R34	0757-0442	9		RESISTOR 10K 1% .125W F TC=0+-100	24546	CT4-1/8-T0-1002-F
A43R35	0698-3150	6		RESISTOR 2.37K 1% .125W F TC=0+-100	24546	CT4-1/8-T0-2371-F
A43R36	0757-0397	3		RESISTOR 68.1 1% .125W F TC=0+-100	24546	CT4-1/8-T0-68R1-F
A43R37	0757-0403	2		RESISTOR 121 1% .125W F TC=0+-100	24546	CT4-1/8-T0-121R-F
A43R38	0757-0277	8		RESISTOR 49.9 1% .125W F TC=0+-100	28480	0757-0277
A43R39	0757-0465	6	2	RESISTOR 100K 1% .125W F TC=0+-100	24546	CT4-1/8-T0-1003-F
A43R40	0757-0280	3	1	RESISTOR 1K 1% .125W F TC=0+-100	24546	CT4-1/8-T0-1001-F
A43R41	0757-0180	2	2	RESISTOR 31.6 1% .125W F TC=0+-100	28480	0757-0180
A43R42	0757-0465	6		RESISTOR 100K 1% .125W F TC=0+-100	24546	CT4-1/8-T0-1003-F
A43R43	0757-0180	2		RESISTOR 31.6 1% .125W F TC=0+-100	28480	0757-0180
A43R44	2100-3383	4	1	RESISTOR-TRMR 50 10% C TOP-ADJ 1-TRN	28480	2100-3383
A43R45	0757-0442	9		RESISTOR 10K 1% .125W F TC=0+-100	24546	CT4-1/8-T0-1002-F

*** Indicates factory selected value.**

Table 1. A43 Replaceable Parts (4 of 4)

Reference Designator	HP Part Number	C D	Qty.	Description	Mfr Code	Mfr Part Number
A43R46	0757-0346	2	2	RESISTOR 10 1% .125W F TC=0+-100	28480	0757-0346
A43R47	0698-3439	4	1	RESISTOR 178 1% .125W F TC=0+-100	24546	CT4-1/8-T0-178R-F
A43R48	0698-3153	9		RESISTOR 3.83K 1% .125W F TC=0+-100	24546	CT4-1/8-T0-3831-F
A43R49	0698-3153	9		RESISTOR 3.83K 1% .125W F TC=0+-100	24546	CT4-1/8-T0-3831-F
A43R50	0698-3153	9		RESISTOR 3.83K 1% .125W F TC=0+-100	24546	CT4-1/8-T0-3831-F
A43R51	0698-3153	9		RESISTOR 3.83K 1% .125W F TC=0+-100	24546	CT4-1/8-T0-3831-F
A43R52	0698-3153	9		RESISTOR 3.83K 1% .125W F TC=0+-100	24546	CT4-1/8-T0-3831-F
A43R53	0698-3153	9		RESISTOR 3.83K 1% .125W F TC=0+-100	24546	CT4-1/8-T0-3831-F
A43R54	0698-3153	9		RESISTOR 3.83K 1% .125W F TC=0+-100	24546	CT4-1/8-T0-3831-F
A43R55	0698-3153	9		RESISTOR 3.83K 1% .125W F TC=0+-100	24546	CT4-1/8-T0-3831-F
A43R56	0698-3153	9		RESISTOR 3.83K 1% .125W F TC=0+-100	24546	CT4-1/8-T0-3831-F
A43R57	0698-3153	9		RESISTOR 3.83K 1% .125W F TC=0+-100	24546	CT4-1/8-T0-3831-F
A43R58	0757-0416	7		RESISTOR 511 1% .125W F TC=0+-100	24546	CT4-1/8-T0-511R-F
A43R59	0757-0416	7		RESISTOR 511 1% .125W F TC=0+-100	24546	CT4-1/8-T0-511R-F
A43R60	0698-3153	9		RESISTOR 3.83K 1% .125W F TC=0+-100	24546	CT4-1/8-T0-3831-F
A43R61	0698-3153	9		RESISTOR 3.83K 1% .125W F TC=0+-100	24546	CT4-1/8-T0-3831-F
A43R62	0757-0346	2		RESISTOR 10 1% .125W F TC=0+-100	28480	0757-0346
A43R63	0698-3153	9		RESISTOR 3.83K 1% .125W F TC=0+-100	24546	CT4-1/8-T0-3831-F
A43R64	0698-3153	9		RESISTOR 3.83K 1% .125W F TC=0+-100	24546	CT4-1/8-T0-3831-F
A43U1	1826-1691	0	1	IC OP AMP H-SLEW-RATE 14-DIP-C PKG	34371	HA1-2539-5
A43U2	1826-0222	1	1	IC OP AMP GP QUAD 14-DIP-P PKG	07263	UA4136PC
A43U3	1826-0221	0	1	IC V RGLTR TO-220	04713	MC7912CT
A43U4	1826-0147	9	1	IC 7812 V RGLTR TO-220	04713	MC7812CP
A43W1	04195-61665	9	1	WIRE ASSEMBLY 8PIN	28480	04195-61665
	04195-00664		1	CASE SHIELD, COMPONENT SIDE		
	04195-00660		1	CASE SHIELD, CIRCUIT SIDE		

*** Indicates factory selected value.**

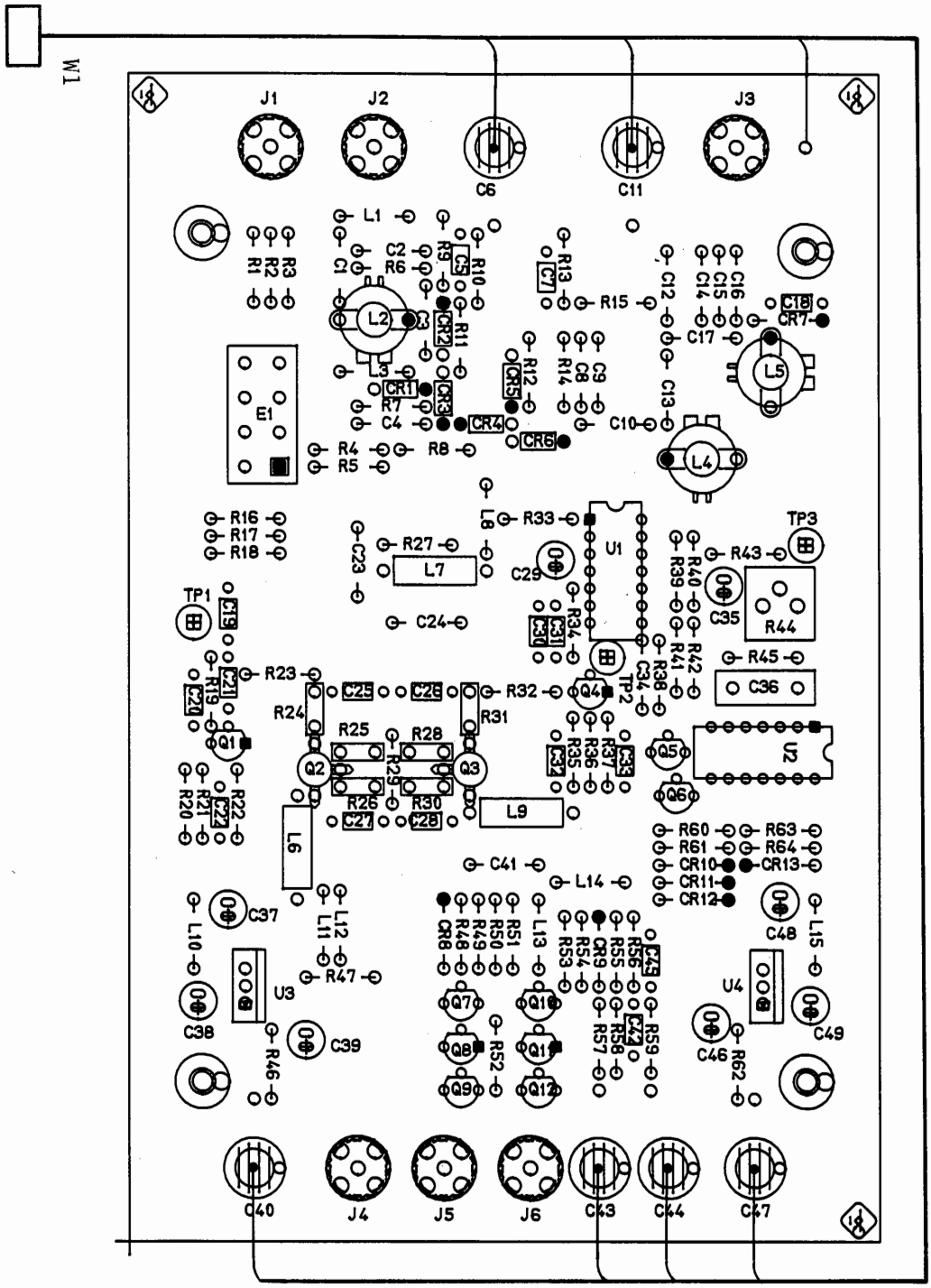

Figure 1. A43 Source 1st IF Converter Component Locations

A43 SOURCE 1st IF CONVERTER

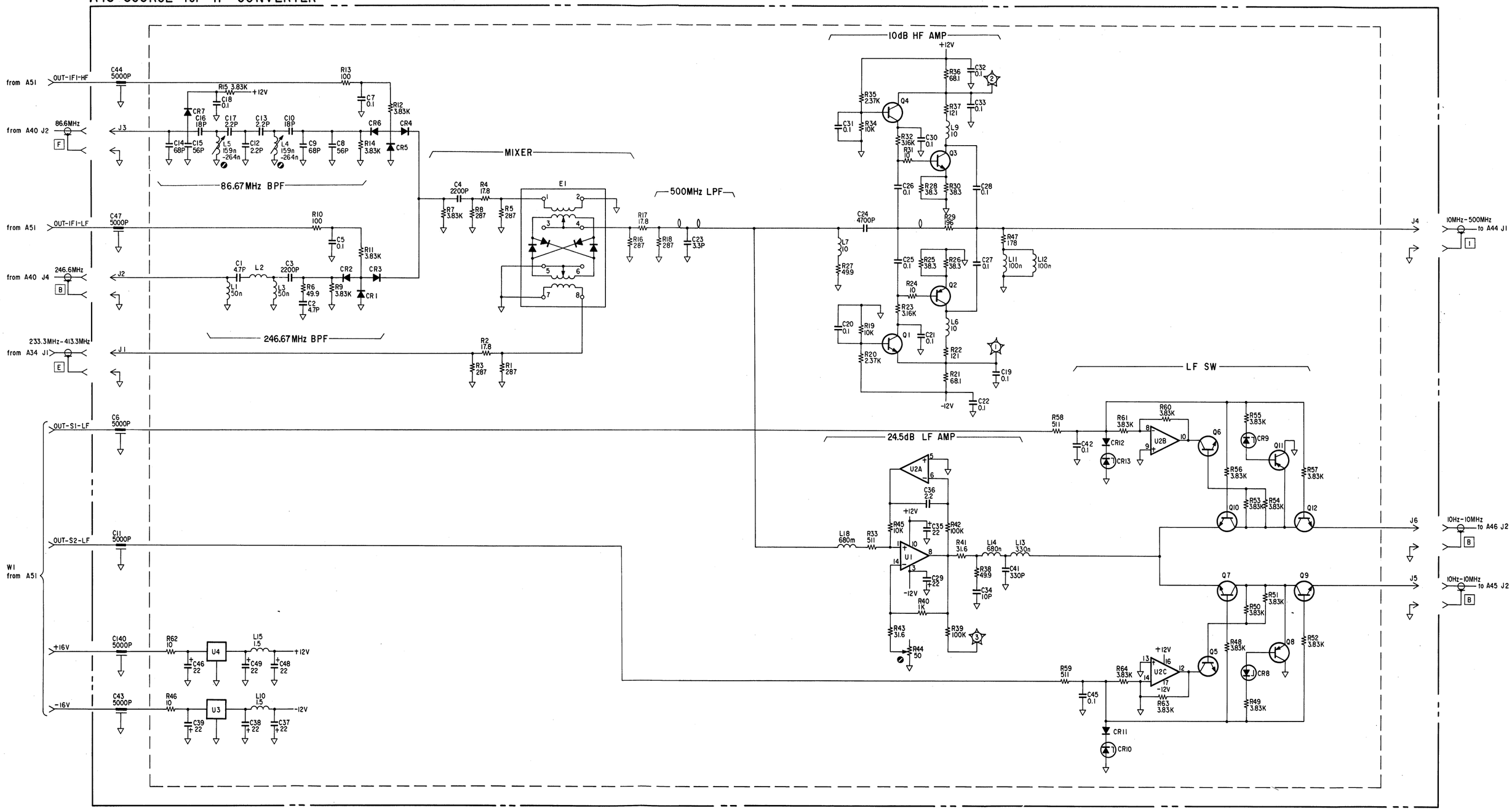

NOTES:

1. REFERENCE DESIGNATORS WITHIN THIS ASSEMBLY ARE ABBREVIATED. PREFIX ABBREVIATION WITH ASSEMBLY NUMBER FOR COMPLETE REFERENCE DESIGNATOR.

2. UNLESS OTHERWISE INDICATED:

   RESISTANCE IN OHMS (Ω)
   CAPACITANCE IN MICROFARADS (μF)
   INDUCTANCE IN MICROHENRIES (μH)

3. ADJUSTMENT NAMES

A43L4	86.6 MHz BPF ADJ
A43L5	86.6 MHz BPF ADJ
A43R44	10 Hz - 10 MHz GAIN ADJ

SOURCE OUTPUT FILTER SERVICE SHEET

The A44 Source Output Filter board assembly filters out unwanted image frequency components from the A43's HF amplifier output.

CIRCUIT DESCRIPTION

When the measurement frequency is less than 10 MHz, the OUT-50-OUT signal voltage goes negative enough for CR11 to conduct and terminate the input signal into R53.

When the measurement frequency is ≥ 10 MHz and < 150 MHz, the OUT-LPF-SLCT signal voltage goes negative causing CR12 and CR28 to conduct routing the input signal through the lowpass filter. In this frequency range, the image frequencies are higher than 500 MHz (256.67 MHz through 396.67 MHz plus 246.67 MHz), so the unwanted image frequencies are filtered out by the lowpass filter.

When the measurement frequency is ≥ 150 MHz and < 225 MHz, the OUT-BPF-L-SLCT signal goes negative causing CR6 and CR23 to conduct routing the input signal through the low-band voltage tunable filter. In this frequency range, the image frequencies are approximately 320 MHz through 400 MHz (236.67 MHz through 311.67 MHz plus 86.67 MHz) and the unwanted image frequencies cannot be filtered out using a fixed frequency filter. The OUT-BPF-L-TUNE signal from the A51 board tunes the bandpass filter's center frequency to track the output frequency.

When the measurement frequency is ≥ 225 MHz and < 340 MHz, the OUT-BPF-M-SLCT signal goes negative causing CR9 and CR26 to conduct routing the input signal through the mid-band voltage tunable filter. When the measurement frequency is ≥ 225 MHz and < 320 MHz, the image frequencies are approximately 400 MHz through 500 MHz (311.67 MHz through 406.67 MHz plus 86.67 MHz). When the measurement frequency is ≥ 320 MHz and < 340 MHz, the image frequencies are approximately 150 MHz through 170 MHz (233.33 MHz through 253.33 MHz minus 86.67 MHz) and the unwanted image frequencies cannot be filtered out using a fixed frequency filter. The OUT-BPF-M-TUNE signal from the A51 board tunes the bandpass filter's center frequency to track the output frequency.

When the measurement frequency is ≥ 340 MHz and ≤ 500 MHz, the OUT-BPF-H-SLCT signal goes negative causing CR8 and CR25 to conduct routing the input signal through the high-band voltage tunable filter. In this frequency range, the image frequencies are approximately 320 MHz through 400 MHz (253.33 MHz through 413.33 MHz minus 86.67 MHz) and the unwanted image frequencies cannot be filtered out using a fixed frequency filter. The OUT-BPF-H-TUNE signal from the A51 board tunes the bandpass filter's center frequency to track the output frequency.

U4 and its associated components form the amplitude level detector to produce feedback signal for the ALC (auto level controller) circuit.

Table 1. A44 Replaceable Parts (1 of 6)

Reference Designator	HP Part Number	C D	Qty.	Description	Mfr Code	Mfr Part Number
A44				SOURCE OUTPUT FILTER		
A44	04195-66544	3	1	OUTPUT FILTER BD	28480	04195-66544
A44C1	0160-2437	1	13	CAPACITOR-FDTHRU 5000PF +80 -20% 200V	28480	0160-2437
	2580-0006	8	13	NUT-HEX	28480	2580-0006
	8150-3490	5	13	WIRE	28480	8150-3490
A44C2	0160-2437	1		CAPACITOR-FDTHRU 5000PF +80 -20% 200V	28480	0160-2437
	2580-0006	8		NUT-HEX	28480	2580-0006
	8150-3490	5		WIRE	28480	8150-3490
A44C3	0160-2437	1		CAPACITOR-FDTHRU 5000PF +80 -20% 200V	28480	0160-2437
	2580-0006	8		NUT-HEX	28480	2580-0006
	8150-3490	5		WIRE	28480	8150-3490
A44C4	0160-6561	0	31	CAPACITOR-FXD .1UF +-20% 50VDC CER	16299	CAC02Z5U104M050A
A44C5	0160-6561	0		CAPACITOR-FXD .1UF +-20% 50VDC CER	16299	CAC02Z5U104M050A
A44C6	0160-6561	0		CAPACITOR-FXD .1UF +-20% 50VDC CER	16299	CAC02Z5U104M050A
A44C7	0160-4830	2	15	CAPACITOR-FXD 2200PF +-10% 100VDC CER	28480	0160-4830
A44C8	0160-6561	0		CAPACITOR-FXD .1UF +-20% 50VDC CER	16299	CAC02Z5U104M050A
A44C9	0160-6561	0		CAPACITOR-FXD .1UF +-20% 50VDC CER	16299	CAC02Z5U104M050A
A44C10	0160-4830	2		CAPACITOR-FXD 2200PF +-10% 100VDC CER	28480	0160-4830
A44C11	0160-4812	0	8	CAPACITOR-FXD 220PF +-5% 100VDC CER	28480	0160-4812
A44C12	0160-4830	2		CAPACITOR-FXD 2200PF +-10% 100VDC CER	28480	0160-4830
A44C13	0160-4812	0		CAPACITOR-FXD 220PF +-5% 100VDC CER	28480	0160-4812
A44C14	0160-6561	0		CAPACITOR-FXD .1UF +-20% 50VDC CER	16299	CAC02Z5U104M050A
A44C15	0160-6561	0		CAPACITOR-FXD .1UF +-20% 50VDC CER	16299	CAC02Z5U104M050A
A44C16	0160-4812	0		CAPACITOR-FXD 220PF +-5% 100VDC CER	28480	0160-4812
A44C17	0160-4830	2		CAPACITOR-FXD 2200PF +-10% 100VDC CER	28480	0160-4830
A44C18	0160-4812	0		CAPACITOR-FXD 220PF +-5% 100VDC CER	28480	0160-4812
A44C19	0180-3363	6	5	CAPACITOR-FXD 22UF+-20% 25VDC AL	28480	0180-3363
A44C20	0180-3363	6		CAPACITOR-FXD 22UF+-20% 25VDC AL	28480	0180-3363
A44C21	0180-3363	6		CAPACITOR-FXD 22UF+-20% 25VDC AL	28480	0180-3363
A44C22	0180-3363	6		CAPACITOR-FXD 22UF+-20% 25VDC AL	28480	0180-3363
A44C23	0180-3363	6		CAPACITOR-FXD 22UF+-20% 25VDC AL	28480	0180-3363
A44C24	0160-2437	1		CAPACITOR-FDTHRU 5000PF +80 -20% 200V	28480	0160-2437
	2580-0006	8		NUT-HEX	28480	2580-0006
	8150-3490	5		WIRE	28480	8150-3490
A44C25	0160-2437	1		CAPACITOR-FDTHRU 5000PF +80 -20% 200V	28480	0160-2437
	2580-0006	8		NUT-HEX	28480	2580-0006
	8150-3490	5		WIRE	28480	8150-3490
A44C26	0160-2437	1		CAPACITOR-FDTHRU 5000PF +80 -20% 200V	28480	0160-2437
	2580-0006	8		NUT-HEX	28480	2580-0006
	8150-3490	5		WIRE	28480	8150-3490
A44C27	0160-2437	1		CAPACITOR-FDTHRU 5000PF +80 -20% 200V	28480	0160-2437
	2580-0006	8		NUT-HEX	28480	2580-0006
	8150-3490	5		WIRE	28480	8150-3490
A44C28	0160-2437	1		CAPACITOR-FDTHRU 5000PF +80 -20% 200V	28480	0160-2437
	2580-0006	8		NUT-HEX	28480	2580-0006
	8150-3490	5		WIRE	28480	8150-3490
A44C29	0160-4830	2		CAPACITOR-FXD 2200PF +-10% 100VDC CER	28480	0160-4830
A44C30	0160-4832	4	5	CAPACITOR-FXD .01UF +-10% 100VDC CER	28480	0160-4832
A44C31	0160-4830	2		CAPACITOR-FXD 2200PF +-10% 100VDC CER	28480	0160-4830
A44C32	0160-4830	2		CAPACITOR-FXD 2200PF +-10% 100VDC CER	28480	0160-4830
A44C33	0160-4830	2		CAPACITOR-FXD 2200PF +-10% 100VDC CER	28480	0160-4830
A44C34	0160-6561	0		CAPACITOR-FXD .1UF +-20% 50VDC CER	16299	CAC02Z5U104M050A
A44C35	0160-4830	2		CAPACITOR-FXD 2200PF +-10% 100VDC CER	28480	0160-4830
A44C36	0160-6561	0		CAPACITOR-FXD .1UF +-20% 50VDC CER	16299	CAC02Z5U104M050A
A44C37	0160-6561	0		CAPACITOR-FXD .1UF +-20% 50VDC CER	16299	CAC02Z5U104M050A
A44C38	0160-4830	2		CAPACITOR-FXD 2200PF +-10% 100VDC CER	28480	0160-4830

*** Indicates factory selected value.**

Table 1. A44 Replaceable Parts (2 of 6)

Reference Designator	HP Part Number	C D	Qty.	Description	Mfr Code	Mfr Part Number
A44C39	0160-4830	2		CAPACITOR-FXD 2200PF +-10% 100VDC CER	28480	0160-4830
A44C40	0160-4830	2		CAPACITOR-FXD 2200PF +-10% 100VDC CER	28480	0160-4830
A44C41	0160-6561	0		CAPACITOR-FXD .1UF +-20% 50VDC CER	16299	CAC02Z5U104M050A
A44C42	0160-6561	0		CAPACITOR-FXD .1UF +-20% 50VDC CER	16299	CAC02Z5U104M050A
A44C43	0160-4832	4		CAPACITOR-FXD .01UF +-10% 100VDC CER	28480	0160-4832
A44C44	0160-4832	4		CAPACITOR-FXD .01UF +-10% 100VDC CER	28480	0160-4832
A44C45	0160-6561	0		CAPACITOR-FXD .1UF +-20% 50VDC CER	16299	CAC02Z5U104M050A
A44C46	0160-6561	0		CAPACITOR-FXD .1UF +-20% 50VDC CER	16299	CAC02Z5U104M050A
A44C47	0160-6561	0		CAPACITOR-FXD .1UF +-20% 50VDC CER	16299	CAC02Z5U104M050A
A44C48	0160-6561	0		CAPACITOR-FXD .1UF +-20% 50VDC CER	16299	CAC02Z5U104M050A
A44C49	0160-6561	0		CAPACITOR-FXD .1UF +-20% 50VDC CER	16299	CAC02Z5U104M050A
A44C50	0160-4791	4	1	CAPACITOR-FXD 10PF +-5% 100VDC CER 0+-30	28480	0160-4791
A44C51	0160-6561	0		CAPACITOR-FXD .1UF +-20% 50VDC CER	16299	CAC02Z5U104M050A
A44C52	0160-4799	2	2	CAPACITOR-FXD 2.2PF +-.25PF 100VDC CER	28480	0160-4799
A44C53	0160-6561	0		CAPACITOR-FXD .1UF +-20% 50VDC CER	16299	CAC02Z5U104M050A
A44C54	0160-2437	1		CAPACITOR-FDTHRU 5000PF +80 -20% 200V	28480	0160-2437
	2580-0006	8		NUT-HEX	28480	2580-0006
	8150-3490	5		WIRE	28480	8150-3490
A44C55	0160-6561	0		CAPACITOR-FXD .1UF +-20% 50VDC CER	16299	CAC02Z5U104M050A
A44C56	0160-6561	0		CAPACITOR-FXD .1UF +-20% 50VDC CER	16299	CAC02Z5U104M050A
A44C57	0160-6561	0		CAPACITOR-FXD .1UF +-20% 50VDC CER	16299	CAC02Z5U104M050A
A44C58	0160-2437	1		CAPACITOR-FDTHRU 5000PF +80 -20% 200V	28480	0160-2437
	2580-0006	8		NUT-HEX	28480	2580-0006
	8150-3490	5		WIRE	28480	8150-3490
A44C59	0160-2437	1		CAPACITOR-FDTHRU 5000PF +80 -20% 200V	28480	0160-2437
	2580-0006	8		NUT-HEX	28480	2580-0006
	8150-3490	5		WIRE	28480	8150-3490
A44C60	0160-2437	1		CAPACITOR-FDTHRU 5000PF +80 -20% 200V	28480	0160-2437
	2580-0006	8		NUT-HEX	28480	2580-0006
	8150-3490	5		WIRE	28480	8150-3490
A44C61	0160-6561	0		CAPACITOR-FXD .1UF +-20% 50VDC CER	16299	CAC02Z5U104M050A
A44C62	0160-4832	4		CAPACITOR-FXD .01UF +-10% 100VDC CER	28480	0160-4832
A44C63	0160-4832	4		CAPACITOR-FXD .01UF +-10% 100VDC CER	28480	0160-4832
A44C64	0160-6561	0		CAPACITOR-FXD .1UF +-20% 50VDC CER	16299	CAC02Z5U104M050A
A44C65	0160-6561	0		CAPACITOR-FXD .1UF +-20% 50VDC CER	16299	CAC02Z5U104M050A
A44C66	0160-4830	2		CAPACITOR-FXD 2200PF +-10% 100VDC CER	28480	0160-4830
A44C67	0160-6561	0		CAPACITOR-FXD .1UF +-20% 50VDC CER	16299	CAC02Z5U104M050A
A44C68	0160-4789	0	8	CAPACITOR-FXD 15PF +-5% 100VDC CER 0+-30	28480	0160-4789
A44C69	0160-4789	0		CAPACITOR-FXD 15PF +-5% 100VDC CER 0+-30	28480	0160-4789
A44C70	0160-4807	3	4	CAPACITOR-FXD 33PF +-5% 100VDC CER 0+-30	28480	0160-4807
A44C71	0160-4807	3		CAPACITOR-FXD 33PF +-5% 100VDC CER 0+-30	28480	0160-4807
A44C72	0160-4812	0		CAPACITOR-FXD 220PF +-5% 100VDC CER	28480	0160-4812
A44C73	0160-4812	0		CAPACITOR-FXD 220PF +-5% 100VDC CER	28480	0160-4812
A44C74	0160-4789	0		CAPACITOR-FXD 15PF +-5% 100VDC CER 0+-30	28480	0160-4789
A44C75	0160-4789	0		CAPACITOR-FXD 15PF +-5% 100VDC CER 0+-30	28480	0160-4789
A44C76	0160-4830	2		CAPACITOR-FXD 2200PF +-10% 100VDC CER	28480	0160-4830
A44C77	0160-6561	0		CAPACITOR-FXD .1UF +-20% 50VDC CER	16299	CAC02Z5U104M050A
A44C78	0160-4812	0		CAPACITOR-FXD 220PF +-5% 100VDC CER	28480	0160-4812
A44C79	0160-4812	0		CAPACITOR-FXD 220PF +-5% 100VDC CER	28480	0160-4812
A44C80	0160-4830	2		CAPACITOR-FXD 2200PF +-10% 100VDC CER	28480	0160-4830
A44C81	0160-4789	0		CAPACITOR-FXD 15PF +-5% 100VDC CER 0+-30	28480	0160-4789
A44C82	0160-4789	0		CAPACITOR-FXD 15PF +-5% 100VDC CER 0+-30	28480	0160-4789
A44C83	0160-4807	3		CAPACITOR-FXD 33PF +-5% 100VDC CER 0+-30	28480	0160-4807
A44C84	0160-4789	0		CAPACITOR-FXD 15PF +-5% 100VDC CER 0+-30	28480	0160-4789
A44C85	0160-4789	0		CAPACITOR-FXD 15PF +-5% 100VDC CER 0+-30	28480	0160-4789

*** Indicates factory selected value.**

Table 1. A44 Replaceable Parts (3 of 6)

Reference Designator	HP Part Number	C D	Qty.	Description	Mfr Code	Mfr Part Number
A44C86	0160-4807	3		CAPACITOR-FXD 33PF +-5% 100VDC CER 0+-30	28480	0160-4807
A44C87	0160-6561	0		CAPACITOR-FXD .1UF +-20% 50VDC CER	16299	CAC02Z5U104M050A
A44C88	0160-6561	0		CAPACITOR-FXD .1UF +-20% 50VDC CER	16299	CAC02Z5U104M050A
A44C89	0160-6561	0		CAPACITOR-FXD .1UF +-20% 50VDC CER	16299	CAC02Z5U104M050A
A44C90	0160-4799	2		CAPACITOR-FXD 2.2PF +-.25PF 100VDC CER	28480	0160-4799
A44C91	0160-6561	0		CAPACITOR-FXD .1UF +-20% 50VDC CER	16299	CAC02Z5U104M050A
A44C92	0160-2437	1		CAPACITOR-FDTHRU 5000PF +80 -20% 200V	28480	0160-2437
	2580-0006	8		NUT-HEX	28480	2580-0006
	8150-3490	5		WIRE	28480	8150-3490
A44C93	0160-3875	3	2	CAPACITOR-FXD 22PF +-5% 200VDC CER 0+-30	28480	0160-3875
A44C94	0160-3875	3		CAPACITOR-FXD 22PF +-5% 200VDC CER 0+-30	28480	0160-3875
A44CR1 A44CR2 A43CR3 A44CR4	5080-3867		4	MATCHED FOUR DIODE SET (when replacing one of CR1, CR2, CR3, and CR4, replace all of above four diodes by this diode set)	28480	5080-3866
A44CR5	1901-0948	8	29	DIODE-SWITCHING 30V 100MA	28480	1901-0948
A44CR6	1901-0948	8		DIODE-SWITCHING 30V 100MA	28480	1901-0948
A44CR7	1901-0948	8		DIODE-SWITCHING 30V 100MA	28480	1901-0948
A44CR8	1901-0948	8		DIODE-SWITCHING 30V 100MA	28480	1901-0948
A44CR9	1901-0948	8		DIODE-SWITCHING 30V 100MA	28480	1901-0948
A44CR10	1901-0948	8		DIODE-SWITCHING 30V 100MA	28480	1901-0948
A44CR11	1901-0948	8		DIODE-SWITCHING 30V 100MA	28480	1901-0948
A44CR12	1901-0948	8		DIODE-SWITCHING 30V 100MA	28480	1901-0948
A44CR13	1901-0948	8		DIODE-SWITCHING 30V 100MA	28480	1901-0948
A44CR14 A44CR17 A43CR18 A44CR21	5080-3867			MATCHED FOUR DIODE SET (when replacing one of CR14, CR17, CR18, and CR21, replace all of above four diodes by this diode set)	28480	5080-3866
A44CR15 A44CR16 A43CR19 A44CR20	5080-3867			MATCHED FOUR DIODE SET (when replacing one of CR15, CR16, CR19, and CR20, replace all of above four diodes by this diode set)	28480	5080-3866
A44CR22	1901-0948	8		DIODE-SWITCHING 30V 100MA	28480	1901-0948
A44CR23	1901-0948	8		DIODE-SWITCHING 30V 100MA	28480	1901-0948
A44CR24	1901-0948	8		DIODE-SWITCHING 30V 100MA	28480	1901-0948
A44CR25	1901-0948	8		DIODE-SWITCHING 30V 100MA	28480	1901-0948
A44CR26	1901-0948	8		DIODE-SWITCHING 30V 100MA	28480	1901-0948
A44CR27	1901-0948	8		DIODE-SWITCHING 30V 100MA	28480	1901-0948
A44CR28	1901-0948	8		DIODE-SWITCHING 30V 100MA	28480	1901-0948
A44CR29	1901-0948	8		DIODE-SWITCHING 30V 100MA	28480	1901-0948
A44CR30 A44CR31	1906-0204		1	MATCHED PAIR DIODE SET (when replacing either CR30 or CR31, replace both of above two diodes by this diode set)		
A44CR32	1901-0948	8		DIODE-SWITCHING 30V 100MA	28480	1901-0948
A44CR33	1901-0948	8		DIODE-SWITCHING 30V 100MA	28480	1901-0948
A44CR34	1901-0948	8		DIODE-SWITCHING 30V 100MA	28480	1901-0948
A44CR35	1901-0948	8		DIODE-SWITCHING 30V 100MA	28480	1901-0948
A44CR36	1901-0948	8		DIODE-SWITCHING 30V 100MA	28480	1901-0948
A44CR37	1901-0948	8		DIODE-SWITCHING 30V 100MA	28480	1901-0948
A44CR38	1901-0948	8		DIODE-SWITCHING 30V 100MA	28480	1901-0948
A44CR39	1901-0948	8		DIODE-SWITCHING 30V 100MA	28480	1901-0948
A44CR40	1901-0948	8		DIODE-SWITCHING 30V 100MA	28480	1901-0948

*** Indicates factory selected value.**

Table 1. A44 Replaceable Parts (4 of 6)

Reference Designator	HP Part Number	C D	Qty.	Description	Mfr Code	Mfr Part Number
A44CR41	5080-3867			MATCHED FOUR DIODE SET	28480	5080-3866
A44CR42				(when replacing one of CR41, CR42, CR43,		
A43CR43				and CR44, replace all of above four		
A44CR44				diodes by this diode set)		
A44CR45	1901-0948	8		DIODE-SWITCHING 30V 100MA	28480	1901-0948
A44CR46	1901-0948	8		DIODE-SWITCHING 30V 100MA	28480	1901-0948
A44CR47	1901-0948	8		DIODE-SWITCHING 30V 100MA	28480	1901-0948
A44J1	1250-0257	1	3	CONNECTOR-RF SMB M PC 50-OHM	28480	1250-0257
A44J2	1250-0257	1		CONNECTOR-RF SMB M PC 50-OHM	28480	1250-0257
A44J3	1250-0257	1		CONNECTOR-RF SMB M PC 50-OHM	28480	1250-0257
A44L1	9140-1298	7	4	COIL-VAR 93NH-145NH Q=75 PC-MTG	S4218	E502AN-500005
A44L2	9140-1298	7		COIL-VAR 93NH-145NH Q=75 PC-MTG	S4218	E502AN-500005
A44L3	9140-1298	7		COIL-VAR 93NH-145NH Q=75 PC-MTG	S4218	E502AN-500005
A44L4	9140-1298	7		COIL-VAR 93NH-145NH Q=75 PC-MTG	S4218	E502AN-500005
A44L5	9100-2259	8	1	INDUCTOR RF-CH-MLD 1.5UH 10%	28480	9100-2259
A44L6	9140-1301	3	8	COIL-VAR 39NH-52NH Q=80 PC-MTG	S4218	E502AN-2000012
A44L7	9140-1301	3		COIL-VAR 39NH-52NH Q=80 PC-MTG	S4218	E502AN-2000012
A44L8	9140-1301	3		COIL-VAR 39NH-52NH Q=80 PC-MTG	S4218	E502AN-2000012
A44L9	9140-1301	3		COIL-VAR 39NH-52NH Q=80 PC-MTG	S4218	E502AN-2000012
A44L10	9100-0539	3	2	INDUCTOR (MISC ITEM)	28480	9100-0539
A44L11	9100-2247	4	14	INDUCTOR RF-CH-MLD 100NH 10%	28480	9100-2247
A44L12	9100-2247	4		INDUCTOR RF-CH-MLD 100NH 10%	28480	9100-2247
A44L13	9100-2247	4		INDUCTOR RF-CH-MLD 100NH 10%	28480	9100-2247
A44L14	9100-2247	4		INDUCTOR RF-CH-MLD 100NH 10%	28480	9100-2247
A44L15	9140-1301	3		COIL-VAR 39NH-52NH Q=80 PC-MTG	S4218	E502AN-2000012
A44L16	9140-1301	3		COIL-VAR 39NH-52NH Q=80 PC-MTG	S4218	E502AN-2000012
A44L17	9140-1301	3		COIL-VAR 39NH-52NH Q=80 PC-MTG	S4218	E502AN-2000012
A44L18	9140-1301	3		COIL-VAR 39NH-52NH Q=80 PC-MTG	S4218	E502AN-2000012
A44L19	9100-2247	4		INDUCTOR RF-CH-MLD 100NH 10%	28480	9100-2247
A44L20	9100-2247	4		INDUCTOR RF-CH-MLD 100NH 10%	28480	9100-2247
A44L21	9100-2247	4		INDUCTOR RF-CH-MLD 100NH 10%	28480	9100-2247
A44L22	9100-2247	4		INDUCTOR RF-CH-MLD 100NH 10%	28480	9100-2247
A44L23	9100-2247	4		INDUCTOR RF-CH-MLD 100NH 10%	28480	9100-2247
A44L24	9100-2247	4		INDUCTOR RF-CH-MLD 100NH 10%	28480	9100-2247
A44L25	9100-2247	4		INDUCTOR RF-CH-MLD 100NH 10%	28480	9100-2247
A44L26	9100-2247	4		INDUCTOR RF-CH-MLD 100NH 10%	28480	9100-2247
A44L27	9100-2247	4		INDUCTOR RF-CH-MLD 100NH 10%	28480	9100-2247
A44L28	9100-2247	4		INDUCTOR RF-CH-MLD 100NH 10%	28480	9100-2247
A44L29	9100-0539	3		INDUCTOR (MISC ITEM)	28480	9100-0539
A44L30	9100-2891	4	1	INDUCTOR 50NH 10%		
A44MP1	04195-00682		1	PLATE SHIELD		
A44MP2	04195-00678		1	PLATE SHIELD		
A44Q1	1853-0459	3	1	TRANSISTOR PNP SI PD=625MW FT=200MHZ	28480	1853-0459
A44Q2	1854-0720	3	1	TRANSISTOR NPN SI PD=500MW FT=4GHZ	28480	1854-0720
A44Q3	1854-0632	6	1	TRANSISTOR NPN SI PD=180MW FT=4GHZ	25403	BFR91
A44R1	0757-0401	0	11	RESISTOR 100 1% .125W F TC=0+-100	24546	CT4-1/8-T0-101-F
A44R2	0757-0401	0		RESISTOR 100 1% .125W F TC=0+-100	24546	CT4-1/8-T0-101-F
A44R3	0757-0401	0		RESISTOR 100 1% .125W F TC=0+-100	24546	CT4-1/8-T0-101-F
A44R4	0698-3153	9	18	RESISTOR 3.83K 1% .125W F TC=0+-100	24546	CT4-1/8-T0-3831-F
A44R5	0757-0465	6	14	RESISTOR 100K 1% .125W F TC=0+-100	24546	CT4-1/8-T0-1003-F
A44R6	0757-0465	6		RESISTOR 100K 1% .125W F TC=0+-100	24546	CT4-1/8-T0-1003-F
A44R7	0757-0465	6		RESISTOR 100K 1% .125W F TC=0+-100	24546	CT4-1/8-T0-1003-F

*** Indicates factory selected value.**

Table 1. A44 Replaceable Parts (5 of 6)

Reference Designator	HP Part Number	C D	Qty.	Description	Mfr Code	Mfr Part Number
A44R8	0757-0465	6		RESISTOR 100K 1% .125W F TC=0+-100	24546	CT4-1/8-T0-1003-F
A44R9	0757-0442	9	2	RESISTOR 10K 1% .125W F TC=0+-100	24546	CT4-1/8-T0-1002-F
A44R10	0698-3446	3	1	RESISTOR 383 1% .125W F TC=0+-100	24546	CT4-1/8-T0-383R-F
A44R11	0757-0346	2	1	RESISTOR 10 1% .125W F TC=0+-100	28480	0757-0346
A44R12	0698-3430	5	1	RESISTOR 21.5 1% .125W F TC=0+-100	03888	PME55-1/8-T0-21R5-F
A44R13	0757-0401	0		RESISTOR 100 1% .125W F TC=0+-100	24546	CT4-1/8-T0-101-F
A44R14	0757-0401	0		RESISTOR 100 1% .125W F TC=0+-100	24546	CT4-1/8-T0-101-F
A44R15	0698-3153	9		RESISTOR 3.83K 1% .125W F TC=0+-100	24546	CT4-1/8-T0-3831-F
A44R16	0698-3153	9		RESISTOR 3.83K 1% .125W F TC=0+-100	24546	CT4-1/8-T0-3831-F
A44R17	0698-3153	9		RESISTOR 3.83K 1% .125W F TC=0+-100	24546	CT4-1/8-T0-3831-F
A44R18	0698-3153	9		RESISTOR 3.83K 1% .125W F TC=0+-100	24546	CT4-1/8-T0-3831-F
A44R19	0757-0465	6		RESISTOR 100K 1% .125W F TC=0+-100	24546	CT4-1/8-T0-1003-F
A44R20	0757-0465	6		RESISTOR 100K 1% .125W F TC=0+-100	24546	CT4-1/8-T0-1003-F
A44R21	0757-0465	6		RESISTOR 100K 1% .125W F TC=0+-100	24546	CT4-1/8-T0-1003-F
A44R22	0757-0465	6		RESISTOR 100K 1% .125W F TC=0+-100	24546	CT4-1/8-T0-1003-F
A44R23	0698-3153	9		RESISTOR 3.83K 1% .125W F TC=0+-100	24546	CT4-1/8-T0-3831-F
A44R24	0698-3153	9		RESISTOR 3.83K 1% .125W F TC=0+-100	24546	CT4-1/8-T0-3831-F
A44R25	0698-3153	9		RESISTOR 3.83K 1% .125W F TC=0+-100	24546	CT4-1/8-T0-3831-F
A44R26	0698-3153	9		RESISTOR 3.83K 1% .125W F TC=0+-100	24546	CT4-1/8-T0-3831-F
A44R27	0698-3153	9		RESISTOR 3.83K 1% .125W F TC=0+-100	24546	CT4-1/8-T0-3831-F
A44R28	0698-0084	9	2	RESISTOR 2.15K 1% .125W F TC=0+-100	24546	CT4-1/8-T0-2151-F
A44R29	0698-3435	0	1	RESISTOR 38.3 1% .125W F TC=0+-100	28480	0698-3435
A44R30	0757-0442	9		RESISTOR 10K 1% .125W F TC=0+-100	24546	CT4-1/8-T0-1002-F
A44R31	0698-0084	9		RESISTOR 2.15K 1% .125W F TC=0+-100	24546	CT4-1/8-T0-2151-F
A44R32	0757-0465	6		RESISTOR 100K 1% .125W F TC=0+-100	24546	CT4-1/8-T0-1003-F
A44R33	0757-0465	6		RESISTOR 100K 1% .125W F TC=0+-100	24546	CT4-1/8-T0-1003-F
A44R34	0698-4037	0	1	RESISTOR 46.4 1% .125W F TC=0+-100	28480	0698-4037
A44R35	0698-3132	4	6	RESISTOR 261 1% .125W F TC=0+-100	24546	CT4-1/8-T0-2610-F
A44R36	0757-0277	8	2	RESISTOR 49.9 1% .125W F TC=0+-100	28480	0757-0277
A44R37	0757-0401	0		RESISTOR 100 1% .125W F TC=0+-100	24546	CT4-1/8-T0-101-F
A44R38	0698-3153	9		RESISTOR 3.83K 1% .125W F TC=0+-100	24546	CT4-1/8-T0-3831-F
A44R39	0698-3153	9		RESISTOR 3.83K 1% .125W F TC=0+-100	24546	CT4-1/8-T0-3831-F
A44R40	0698-0083	8	2	RESISTOR 1.96K 1% .125W F TC=0+-100	24546	CT4-1/8-T0-1961-F
A44R41	0698-3153	9		RESISTOR 3.83K 1% .125W F TC=0+-100	24546	CT4-1/8-T0-3831-F
A44R42	0757-0401	0		RESISTOR 100 1% .125W F TC=0+-100	24546	CT4-1/8-T0-101-F
A44R43	0757-0280	3	1	RESISTOR 1K 1% .125W F TC=0+-100	24546	CT4-1/8-T0-1001-F
A44R44	0698-3439	4	1	RESISTOR 178 1% .125W F TC=0+-100	24546	CT4-1/8-T0-178R-F
A44R45				NOT ASSIGNED		
A44R46	0698-3153	9		RESISTOR 3.83K 1% .125W F TC=0+-100	24546	CT4-1/8-T0-3831-F
A44R47	0698-3153	9		RESISTOR 3.83K 1% .125W F TC=0+-100	24546	CT4-1/8-T0-3831-F
A44R48	0698-0083	8		RESISTOR 1.96K 1% .125W F TC=0+-100	24546	CT4-1/8-T0-1961-F
A44R49	0757-0401	0		RESISTOR 100 1% .125W F TC=0+-100	24546	CT4-1/8-T0-101-F
A44R50	0757-0401	0		RESISTOR 100 1% .125W F TC=0+-100	24546	CT4-1/8-T0-101-F
A44R51	0757-0401	0		RESISTOR 100 1% .125W F TC=0+-100	24546	CT4-1/8-T0-101-F
A44R52	0698-3153	9		RESISTOR 3.83K 1% .125W F TC=0+-100	24546	CT4-1/8-T0-3831-F
A44R53	0757-0277	8		RESISTOR 49.9 1% .125W F TC=0+-100	28480	0757-0277
A44R54	0757-0465	6		RESISTOR 100K 1% .125W F TC=0+-100	24546	CT4-1/8-T0-1003-F
A44R55	0757-0465	6		RESISTOR 100K 1% .125W F TC=0+-100	24546	CT4-1/8-T0-1003-F
A44R56	0698-3441	8	5	RESISTOR 215 1% .125W F TC=0+-100	24546	CT4-1/8-T0-215R-F
A44R57	0698-3431	6	1	RESISTOR 23.7 1%		
A44R58	0698-3441	8		RESISTOR 215 1% .125W F TC=0+-100	24546	CT4-1/8-T0-215R-F
A44R59	0757-0465	6		RESISTOR 100K 1% .125W F TC=0+-100	24546	CT4-1/8-T0-1003-F
A44R60	0757-0465	6		RESISTOR 100K 1% .125W F TC=0+-100	24546	CT4-1/8-T0-1003-F

*** Indicates factory selected value.**

Table 1. A44 Replaceable Parts (6 of 6)

Reference Designator	HP Part Number	C D	Qty.	Description	Mfr Code	Mfr Part Number
A44R61	0757-0395	1	1	RESISTOR 56.2 1% .125W F TC=0+-100	24546	CT4-1/8-T0-56R2-F
A44R62	0698-0085	0	1	RESISTOR 2.61K 1% .125W F TC=0+-100	24546	CT4-1/8-T0-2611-F
A44R63	0757-0421	4	1	RESISTOR 825 1% .125W F TC=0+-100	24546	CT4-1/8-T0-825R-F
A44R64	0757-0279	0	1	RESISTOR 3.16K 1% .125W F TC=0+-100	24546	CT4-1/8-T0-3161-F
A44R65	0698-3132	4		RESISTOR 261 1% .125W F TC=0+-100	24546	CT4-1/8-T0-2610-F
A44R66	0698-3441	8		RESISTOR 215 1% .125W F TC=0+-100	24546	CT4-1/8-T0-215R-F
A44R67	0698-3441	8		RESISTOR 215 1% .125W F TC=0+-100	24546	CT4-1/8-T0-215R-F
A44R68	0698-3441	8		RESISTOR 215 1% .125W F TC=0+-100	24546	CT4-1/8-T0-215R-F
A44R69	0698-3153	9		RESISTOR 3.83K 1% .125W F TC=0+-100	24546	CT4-1/8-T0-3831-F
A44R70	0698-3153	9		RESISTOR 3.83K 1% .125W F TC=0+-100	24546	CT4-1/8-T0-3831-F
A44R71	0757-0401	0		RESISTOR 100 1% .125W F TC=0+-100	24546	CT4-1/8-T0-101-F
A44R72	0698-3132	4		RESISTOR 261 1% .125W F TC=0+-100	24546	CT4-1/8-T0-2610-F
A44R73	0757-0294	9	2	RESISTOR 17.8 1% .125W F TC=0+-100	19701	5033R-1/8-T0-17R8-F
A44R74	0698-3132	4		RESISTOR 261 1% .125W F TC=0+-100	24546	CT4-1/8-T0-2610-F
A44R75	0698-3132	4		RESISTOR 261 1% .125W F TC=0+-100	24546	CT4-1/8-T0-2610-F
A44R76	0757-0294	9		RESISTOR 17.8 1% .125W F TC=0+-100	19701	5033R-1/8-T0-17R8-F
A44R77	0698-3132	4		RESISTOR 261 1% .125W F TC=0+-100	24546	CT4-1/8-T0-2610-F
A44U1	1826-0221	0	1	IC V RGLTR TO-220	04713	MC7912CT
A44U2	1826-0147	9	1	IC 7812 V RGLTR TO-220	04713	MC7812CP
A44U3	1826-0635	0	1	IC OP AMP LOW-OFS 8-DIP-P PKG	06665	OP-07CP
A44U4	1826-1311	1	1	IC RF/IF AMPL WB 4-DIP-P PKG	28480	1826-1311
A44W1	04195-61666	0	1	WIRE ASSEMBLY 8PIN	28480	04195-61666
A44W2	04195-61668	2	1	WIRE ASSEMBLY 10PIN	28480	04195-61668
	04195-00665		1	CASE SHIELD, COMPONENT SIDE		
	04195-00712		1	CASE SHISLD, CIRCUIT SIDE		

*** Indicates factory selected value.**

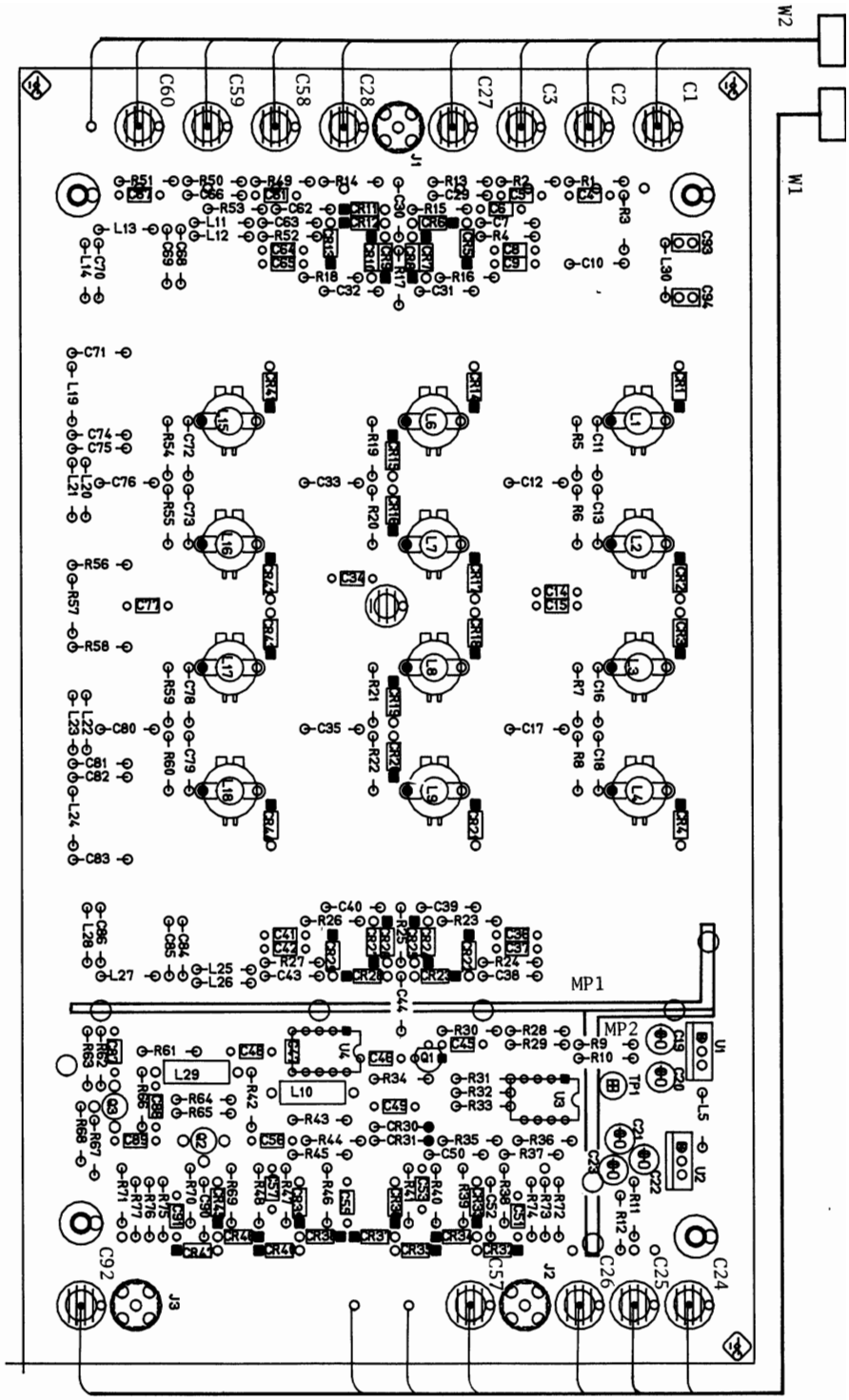

Figure 1. A44 Source Output Filter Component Locations

A44 SOURCE OUTPUT FILTER

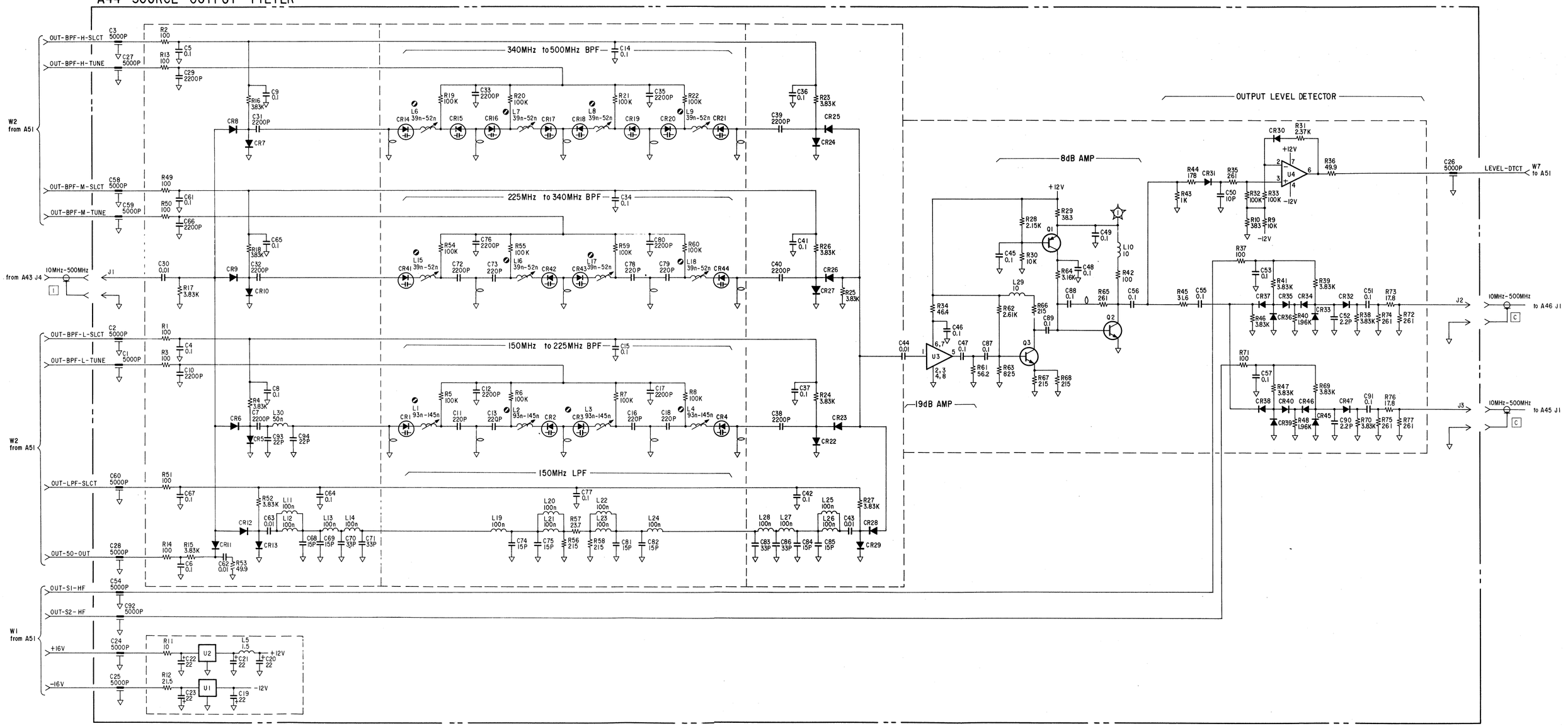

NOTES:

1. REFERENCE DESIGNATORS WITHIN THIS ASSEMBLY ARE ABBREVIATED. PREFIX ABBREVIATION WITH ASSEMBLY NUMBER FOR COMPLETE REFERENCE DESIGNATOR.

2. UNLESS OTHERWISE INDICATED:

   RESISTANCE IN OHMS (Ω)
   CAPACITANCE IN MICROFARADS (μF)
   INDUCTANCE IN MICROHENRIES (μH)

3. ADJUSTMENT NAMES

A44L1	150 MHz - 225 MHz BPF ADJ
A44L2	150 MHz - 225 MHz BPF ADJ
A44L3	150 MHz - 225 MHz BPF ADJ
A44L4	150 MHz - 225 MHz BPF ADJ
A44L6	340 MHz - 500 MHz BPF ADJ
A44L7	340 MHz - 500 MHz BPF ADJ
A44L8	340 MHz - 500 MHz BPF ADJ
A44L9	340 MHz - 500 MHz BPF ADJ
A44L15	225 MHz - 340 MHz BPF ADJ
A44L16	225 MHz - 340 MHz BPF ADJ
A44L17	225 MHz - 340 MHz BPF ADJ
A44L18	225 MHz - 340 MHz BPF ADJ

POWER AMPLIFIERS SERVICE SHEET

The A45 S2 Power Amplifier, and the A46 S1 Power Amplifier board assemblies, the respective signal source output amplifiers for S2 and S1, are electrically and physically identical.

CIRCUIT DESCRIPTION

Since A45 and A46 are identical the following circuit description will only explain A45.

INPUT SELECTOR

When the measurement frequency is < 10 MHz, the OUT-S2-LF signal is positive, and routes the signal from the A43 to the power amplifier. Transistors Q1 and Q3 are turned ON by injecting base to collector current (the collector is used as the emitter, and the emitter is used as the collector.) U3A inverts the input voltage, Q8 offsets the voltage by a value equal to the voltage across one transistor junction. By adjusting the series resistance of R10 and R36 to be equal to one half the value of R7 or R9, all base current will flow to R10, so no dc current will flow in the input stage nor to the LF amplifier circuit, the HF amplifier uses-capacitive coupling at its input so there is no dc current flow at its input.

When the measurement frequency is ≥ 10 MHz, the OUT-S2-HF signal is positive, and routes the signal from the A44 to the power amplifier.

POWER AMPLIFIER

The power amplifier is constructed of HF and LF amplifiers operating in parallel. The output of these two amplifiers are summed together at the junction of C39 and L7. Low frequency signals amplified by Q11 and Q12 see L7 as a low impedance and are passed. C39 is a high impedance at low frequencies. As the signal frequency increases it is progressively blocked by L7 and passed by C39, giving a continuous and gradual change over from the LF amplifier circuit to the HF amplifier circuit.

Q6, Q9, and Q10 amplify the input signal, and Q4, Q5, and Q7 are used in a negative feedback configuration to stabilize the respective dc collector currents of Q6, Q9, and Q10. For example, Q9's collector current is set by the fixed current feed into the base of Q5 which acts as an error amplifier/bias current driver, and by the associated components around Q5 and Q9. If some disturbance causes Q9's dc collector current to increase, there will be a corresponding decrease in Q5's emitter voltage which will decrease Q5's emitter current, thus in turn decreasing the bias current into Q9's base until Q9's dc collector current/Q5's emitter voltage reaches a state of equalization again.

U3B integrates the output of the LF power amplifier and feeds it back to the input of U4 to reduce the dc offset of the LF power amplifier's output to minimizes the dc offset voltage.

Table 1. A45/A46 Replaceable Parts (1 of 3)

Reference Designator	HP Part Number	C D	Qty.	Description	Mfr Code	Mfr Part Number
A45, A46						
A45				S2 POWER AMPLIFIER		
A45	04195-66545	4	2	POWER AMPLIFIER	28480	04195-66545
A45C1	0160-2437	1	4	CAPACITOR-FDTHRU 5000PF +80 -20% 200V	28480	0160-2437
	2580-0006	8	4	NUT-HEX	28480	2580-0006
	8150-3490	5	4	WIRE	28480	8150-3490
A45C2	0160-2437	1		CAPACITOR-FDTHRU 5000PF +80 -20% 200V	28480	0160-2437
	2580-0006	8		NUT-HEX	28480	2580-0006
	8150-3490	5		WIRE	28480	8150-3490
A45C3	0180-3363	6	11	CAPACITOR-FXD 22UF+-20% 25VDC AL	28480	0180-3363
A45C4	0160-6561	0	9	CAPACITOR-FXD .1UF +-20% 50VDC CER	16299	CAC02Z5U104M050A
A45C5	0160-4832	4	3	CAPACITOR-FXD .01UF +-10% 100VDC CER	28480	0160-4832
A45C6	0160-6561	0		CAPACITOR-FXD .1UF +-20% 50VDC CER	16299	CAC02Z5U104M050A
A45C7	0160-2437	1		CAPACITOR-FDTHRU 5000PF +80 -20% 200V	28480	0160-2437
	2580-0006	8		NUT-HEX	28480	2580-0006
	8150-3490	5		WIRE	28480	8150-3490
A45C8	0160-2437	1		CAPACITOR-FDTHRU 5000PF +80 -20% 200V	28480	0160-2437
	2580-0006	8		NUT-HEX	28480	2580-0006
	8150-3490	5		WIRE	28480	8150-3490
A45C9	0180-3363	6		CAPACITOR-FXD 22UF+-20% 25VDC AL	28480	0180-3363
A45C10	0180-3363	6		CAPACITOR-FXD 22UF+-20% 25VDC AL	28480	0180-3363
A45C11	0180-3363	6		CAPACITOR-FXD 22UF+-20% 25VDC AL	28480	0180-3363
A45C12	0180-3363	6		CAPACITOR-FXD 22UF+-20% 25VDC AL	28480	0180-3363
A45C13	0160-6561	0		CAPACITOR-FXD .1UF +-20% 50VDC CER	16299	CAC02Z5U104M050A
A45C14	0160-6561	0		CAPACITOR-FXD .1UF +-20% 50VDC CER	16299	CAC02Z5U104M050A
A45C15	0160-4797	0	1	CAPACITOR-FXD 3.3PF +-.25PF 100VDC CER	28480	0160-4797
A45C16	0180-3469	3	1	CAPACITOR-FXD 100UF+-20% 25VDC AL	28480	0180-3469
A45C17	0160-3875	3	1	CAPACITOR-FXD 22PF +-5% 200VDC CER 0+-30	28480	0160-3875
A45C18	0160-4794	7	1	CAPACITOR-FXD 5.6PF +-.5PF 100VDC CER	28480	0160-4794
A45C19	0180-3363	6		CAPACITOR-FXD 22UF+-20% 25VDC AL	28480	0180-3363
A45C20	0160-4799	2	2	CAPACITOR-FXD 2.2PF +-.25PF 100VDC CER	28480	0160-4799
A45C21	0160-4832	4		CAPACITOR-FXD .01UF +-10% 100VDC CER	28480	0160-4832
A45C22	0180-1085	5	5	CAPACITOR-FXD 4.7UF 16VDC TA	28480	0180-1085
A45C23	0160-6561	0		CAPACITOR-FXD .1UF +-20% 50VDC CER	16299	CAC02Z5U104M050A
A45C24	0160-6561	0		CAPACITOR-FXD .1UF +-20% 50VDC CER	16299	CAC02Z5U104M050A
A45C25	0160-3901	6	1	CAPACITOR-FXD 2.2UF +-20% 25VDC CER	28480	0160-3901
A45C26	0180-3363	6		CAPACITOR-FXD 22UF+-20% 25VDC AL	28480	0180-3363
A45C27	0160-6561	0		CAPACITOR-FXD .1UF +-20% 50VDC CER	16299	CAC02Z5U104M050A
A45C28	0180-3363	6		CAPACITOR-FXD 22UF+-20% 25VDC AL	28480	0180-3363
A45C29	0160-0127	2	1	CAPACITOR-FXD 1UF +-20% 50VDC CER	28480	0160-0127
A45C30	0180-3363	6		CAPACITOR-FXD 22UF+-20% 25VDC AL	28480	0180-3363
A45C31	0160-6561	0		CAPACITOR-FXD .1UF +-20% 50VDC CER	16299	CAC02Z5U104M050A
A45C32	0160-6561	0		CAPACITOR-FXD .1UF +-20% 50VDC CER	16299	CAC02Z5U104M050A
A45C33	0160-4799	2		CAPACITOR-FXD 2.2PF +-.25PF 100VDC CER	28480	0160-4799
A45C34	0160-3874	2	2	CAPACITOR-FXD 10PF +-.5PF 200VDC CER	28480	0160-3874
A45C35	0180-1085	5		CAPACITOR-FXD 4.7UF 16VDC TA	28480	0180-1085
A45C36	0180-1085	5		CAPACITOR-FXD 4.7UF 16VDC TA	28480	0180-1085
A45C37	0180-1085	5		CAPACITOR-FXD 4.7UF 16VDC TA	28480	0180-1085
A45C38	0180-1085	5		CAPACITOR-FXD 4.7UF 16VDC TA	28480	0180-1085
A45C39	0160-4832	4		CAPACITOR-FXD .01UF +-10% 100VDC CER	28480	0160-4832
A45C40	0160-3874	2		CAPACITOR-FXD 10PF +-.5PF 200VDC CER	28480	0160-3874
A45C41	0180-3363	6		CAPACITOR-FXD 22UF+-20% 25VDC AL	28480	0180-3363
A45C42	0180-3363	6		CAPACITOR-FXD 22UF+-20% 25VDC AL	28480	0180-3363
A45CR1	1901-0948	8	6	DIODE-SWITCHING 30V 100MA	28480	1901-0948
A45CR2	1901-0948	8		DIODE-SWITCHING 30V 100MA	28480	1901-0948

*** Indicates factory selected value.**

Table 1. A45/A46 Replaceable Parts (2 of 3)

Reference Designator	HP Part Number	C D	Qty.	Description	Mfr Code	Mfr Part Number
A45CR3	1901-0948	8		DIODE-SWITCHING 30V 100MA	28480	1901-0948
A45CR4	1901-0948	8		DIODE-SWITCHING 30V 100MA	28480	1901-0948
A45CR5	1901-0050	3	5	DIODE-SWITCHING 80V 200MA 2NS DO-35	9N171	1N4150
A45CR6	1902-0953	7	4	DIODE-ZNR 6.2V 5% DO-35 PD=.4W TC=+.053%	28480	1902-0953
A45CR7	1902-0953	7		DIODE-ZNR 6.2V 5% DO-35 PD=.4W TC=+.053%	28480	1902-0953
A45CR8	1901-0948	8		DIODE-SWITCHING 30V 100MA	28480	1901-0948
A45CR9	1901-0948	8		DIODE-SWITCHING 30V 100MA	28480	1901-0948
A45CR10	1902-0953	7		DIODE-ZNR 6.2V 5% DO-35 PD=.4W TC=+.053%	28480	1902-0953
A45CR11	1902-0953	7		DIODE-ZNR 6.2V 5% DO-35 PD=.4W TC=+.053%	28480	1902-0953
A45CR12	1901-0050	3		DIODE-SWITCHING 80V 200MA 2NS DO-35	9N171	1N4150
A45CR13	1901-0050	3		DIODE-SWITCHING 80V 200MA 2NS DO-35	9N171	1N4150
A45CR14	1901-0050	3		DIODE-SWITCHING 80V 200MA 2NS DO-35	9N171	1N4150
A45CR15	1901-0050	3		DIODE-SWITCHING 80V 200MA 2NS DO-35	9N171	1N4150
A45J1	1250-0257	1	3	CONNECTOR-RF SMB M PC 50-OHM	28480	1250-0257
A45J2	1250-0257	1		CONNECTOR-RF SMB M PC 50-OHM	28480	1250-0257
A45J3	1250-0257	1		CONNECTOR-RF SMB M PC 50-OHM	28480	1250-0257
A45L1	9100-2259	8	2	INDUCTOR RF-CH-MLD 1.5UH 10%	28480	9100-2259
A45L2	9100-2259	8		INDUCTOR RF-CH-MLD 1.5UH 10%	28480	9100-2259
A45L3	9140-0137	1	2	INDUCTOR RF-CH-MLD 1MH 5%	28480	9140-0137
A45L4	04195-61551	2	2	CORE ASSEMBLY	28480	04195-61551
A45L5	04195-61551	2		CORE ASSEMBLY	28480	04195-61551
A45L6	9140-0137	1		INDUCTOR RF-CH-MLD 1MH 5%	28480	9140-0137
A45L7	9100-3313	7	1	INDUCTOR RF-CH-MLD 22UH 5%	28480	9100-3313
A45Q1	1854-1074	2	3	TRANSISTOR NPN SI PD=200MW FT=.03HZ	28480	1854-1074
A45Q2	1853-0459	3	3	TRANSISTOR PNP SI PD=625MW FT=200MHZ	28480	1853-0459
A45Q3	1854-1074	2		TRANSISTOR NPN SI PD=200MW FT=.03HZ	28480	1854-1074
A45Q4	1853-0459	3		TRANSISTOR PNP SI PD=625MW FT=200MHZ	28480	1853-0459
A45Q5	1853-0459	3		TRANSISTOR PNP SI PD=625MW FT=200MHZ	28480	1853-0459
A45Q6	1854-0632	6	2	TRANSISTOR NPN SI PD=180MW FT=4GHZ	25403	BFR91
A45Q7	1854-0810	2	1	TRANSISTOR NPN SI PD=625MW FT=200MHZ	28480	1854-0810
A45Q8	1854-1074	2		TRANSISTOR NPN SI PD=200MW FT=.03HZ	28480	1854-1074
A45Q9	1854-0632	6		TRANSISTOR NPN SI PD=180MW FT=4GHZ	25403	BFR91
A45Q10	1853-0460	6	1	TRANSISTOR PNP SI PD=180MW FT=4GHZ	28480	1853-0460
A45Q11	1853-0314	9	1	TRANSISTOR PNP 2N2905A SI TO-39 PD=600MW	04713	2N2905A
A45Q12	1854-0247	9	1	TRANSISTOR NPN SI TO-39 PD=1W FT=800MHZ	28480	1854-0247
A45R1	0757-0346	2	2	RESISTOR 10 1% .125W F TC=0+-100	28480	0757-0346
A45R2	0757-0401	0	2	RESISTOR 100 1% .125W F TC=0+-100	24546	CT4-1/8-T0-101-F
A45R3	0698-0083	8	1	RESISTOR 1.96K 1% .125W F TC=0+-100	24546	CT4-1/8-T0-1961-F
A45R4	0698-3153	9	9	RESISTOR 3.83K 1% .125W F TC=0+-100	24546	CT4-1/8-T0-3831-F
A45R5	0698-3153	9		RESISTOR 3.83K 1% .125W F TC=0+-100	24546	CT4-1/8-T0-3831-F
A45R6	0757-0416	7	1	RESISTOR 511 1% .125W F TC=0+-100	24546	CT4-1/8-T0-511R-F
A45R7	0698-3153	9		RESISTOR 3.83K 1% .125W F TC=0+-100	24546	CT4-1/8-T0-3831-F
A45R8	0698-3153	9		RESISTOR 3.83K 1% .125W F TC=0+-100	24546	CT4-1/8-T0-3831-F
A45R9	0698-3153	9		RESISTOR 3.83K 1% .125W F TC=0+-100	24546	CT4-1/8-T0-3831-F
A45R10	0757-0280	3	3	RESISTOR 1K 1% .125W F TC=0+-100	24546	CT4-1/8-T0-1001-F
A45R11	0698-3153	9		RESISTOR 3.83K 1% .125W F TC=0+-100	24546	CT4-1/8-T0-3831-F
A45R12	0757-0346	2		RESISTOR 10 1% .125W F TC=0+-100	28480	0757-0346
A45R13	0757-0278	9	1	RESISTOR 1.78K 1% .125W F TC=0+-100	24546	CT4-1/8-T0-1781-F
A45R14	0698-4037	0	4	RESISTOR 46.4 1% .125W F TC=0+-100	28480	0698-4037
A45R15	0698-4037	0		RESISTOR 46.4 1% .125W F TC=0+-100	28480	0698-4037
A45R16	0698-0084	9	4	RESISTOR 2.15K 1% .125W F TC=0+-100	24546	CT4-1/8-T0-2151-F
A45R17	0757-0443	0	2	RESISTOR 11K 1% .125W F TC=0+-100	24546	CT4-1/8-T0-1102-F
A45R18	0757-0442	9	2	RESISTOR 10K 1% .125W F TC=0+-100	24546	CT4-1/8-T0-1002-F

*** Indicates factory selected value.**

Table 1. A45/A46 Replaceable Parts (3 of 3)

Reference Designator	HP Part Number	C D	Qty.	Description	Mfr Code	Mfr Part Number
A45R19	0698-3153	9		RESISTOR 3.83K 1% .125W F TC=0+-100	24546	CT4-1/8-T0-3831-F
A45R20	0698-3153	9		RESISTOR 3.83K 1% .125W F TC=0+-100	24546	CT4-1/8-T0-3831-F
A45R21	0757-0279	0	3	RESISTOR 3.16K 1% .125W F TC=0+-100	24546	CT4-1/8-T0-3161-F
A45R22	0698-7196	8	4	RESISTOR 21.5 1% .05W F TC=0+-100	24546	C3-1/8-T0-21R5-F
A45R23	0698-7196	8		RESISTOR 21.5 1% .05W F TC=0+-100	24546	C3-1/8-T0-21R5-F
A45R24	0698-7188	8	3	RESISTOR 10 1% .05W F TC=0+-100	24546	C3-1/8-T0-10R-F
A45R25	0698-7202	7	3	RESISTOR 38.3 1% .05W F TC=0+-100	24546	C3-1/8-T0-38R3-F
A45R26	0757-0401	0		RESISTOR 100 1% .125W F TC=0+-100	24546	CT4-1/8-T0-101-F
A45R27	0757-0279	0		RESISTOR 3.16K 1% .125W F TC=0+-100	24546	CT4-1/8-T0-3161-F
A45R28	0757-0277	8	3	RESISTOR 49.9 1% .125W F TC=0+-100	28480	0757-0277
A45R29	0757-0280	3		RESISTOR 1K 1% .125W F TC=0+-100	24546	CT4-1/8-T0-1001-F
A45R30	0757-0279	0		RESISTOR 3.16K 1% .125W F TC=0+-100	24546	CT4-1/8-T0-3161-F
A45R31	0757-0443	0		RESISTOR 11K 1% .125W F TC=0+-100	24546	CT4-1/8-T0-1102-F
A45R32	0698-0084	9		RESISTOR 2.15K 1% .125W F TC=0+-100	24546	CT4-1/8-T0-2151-F
A45R33	0698-4037	0		RESISTOR 46.4 1% .125W F TC=0+-100	28480	0698-4037
A45R34	0698-3153	9		RESISTOR 3.83K 1% .125W F TC=0+-100	24546	CT4-1/8-T0-3831-F
A45R35	0757-0442	9		RESISTOR 10K 1% .125W F TC=0+-100	24546	CT4-1/8-T0-1002-F
A45R36	2100-0567	0	1	RESISTOR-TRMR 2K 10% C TOP-ADJ 1-TRN	28480	2100-0567
A45R37	0757-0394	0	1	RESISTOR 51.1 1% .125W F TC=0+-100	24546	CT4-1/8-T0-51R1-F
A45R38	0757-1094	9	1	RESISTOR 1.47K 1% .125W F TC=0+-100	24546	CT4-1/8-T0-1471-F
A45R39	2100-3383	4	1	RESISTOR-TRMR 50 10% C TOP-ADJ 1-TRN	28480	2100-3383
A45R40	0698-3438	3	2	RESISTOR 147 1% .125W F TC=0+-100	24546	CT4-1/8-T0-147R-F
A45R41	0698-7206	1	2	RESISTOR 56.2 1% .05W F TC=0+-100	24546	C3-1/8-T0-56R2-F
A45R42	0698-7196	8		RESISTOR 21.5 1% .05W F TC=0+-100	24546	C3-1/8-T0-21R5-F
A45R43	0698-7202	7		RESISTOR 38.3 1% .05W F TC=0+-100	24546	C3-1/8-T0-38R3-F
A45R44	0698-7188	8		RESISTOR 10 1% .05W F TC=0+-100	24546	C3-1/8-T0-10R-F
A45R45	0698-3446	3	1	RESISTOR 383 1% .125W F TC=0+-100	24546	CT4-1/8-T0-383R-F
A45R46	0698-7188	8		RESISTOR 10 1% .05W F TC=0+-100	24546	C3-1/8-T0-10R-F
A45R47	0698-4037	0		RESISTOR 46.4 1% .125W F TC=0+-100	28480	0698-4037
A45R48	0698-7206	1		RESISTOR 56.2 1% .05W F TC=0+-100	24546	C3-1/8-T0-56R2-F
A45R49	0698-7202	7		RESISTOR 38.3 1% .05W F TC=0+-100	24546	C3-1/8-T0-38R3-F
A45R50	0698-7196	8		RESISTOR 21.5 1% .05W F TC=0+-100	24546	C3-1/8-T0-21R5-F
A45R51	0698-3438	3		RESISTOR 147 1% .125W F TC=0+-100	24546	CT4-1/8-T0-147R-F
A45R52	0757-0465	6	2	RESISTOR 100K 1% .125W F TC=0+-100	24546	CT4-1/8-T0-1003-F
A45R53	0757-0465	6		RESISTOR 100K 1% .125W F TC=0+-100	24546	CT4-1/8-T0-1003-F
A45R54	0698-3428	1	2	RESISTOR 14.7 1% .125W F TC=0+-100	03888	PME55-1/8-T0-14R7-F
A45R55	0757-0280	3		RESISTOR 1K 1% .125W F TC=0+-100	24546	CT4-1/8-T0-1001-F
A45R56	0698-0084	9		RESISTOR 2.15K 1% .125W F TC=0+-100	24546	CT4-1/8-T0-2151-F
A45R57	0757-0277	8		RESISTOR 49.9 1% .125W F TC=0+-100	28480	0757-0277
A45R58	0757-0277	8		RESISTOR 49.9 1% .125W F TC=0+-100	28480	0757-0277
A45R59	0698-0084	9		RESISTOR 2.15K 1% .125W F TC=0+-100	24546	CT4-1/8-T0-2151-F
A45R60	0698-3428	1		RESISTOR 14.7 1% .125W F TC=0+-100	03888	PME55-1/8-T0-14R7-F
A45U1	1826-0147	9	1	IC 7812 V RGLTR TO-220	04713	MC7812CP
A45U2	1826-0221	0	1	IC V RGLTR TO-220	04713	MC7912CT
A45U3	1826-0521	3	1	IC OP AMP LOW-BIAS-H-IMPD DUAL 8-DIP-P	01295	TL072CP
A45U4	1826-1691	0	1	IC OP AMP H-SLEW-RATE 14-DIP-C PKG	34371	HA1-2539-5
A45W1	04195-61669	3	1	WIRE ASSEMBLY 6PIN	28480	04195-61669
A46				S1 POWER AMPLIFIER		
A46	04195-66545	4		POWER AMPLIFIER SAME AS A45	28480	04195-66545
	04195-00658		1	CASE SHIELD, A45 CIRCUIT SIDE		
	04195-00656		1	CASE SHIELD, BETWEEN A45 AND A46		

*** Indicates factory selected value.**

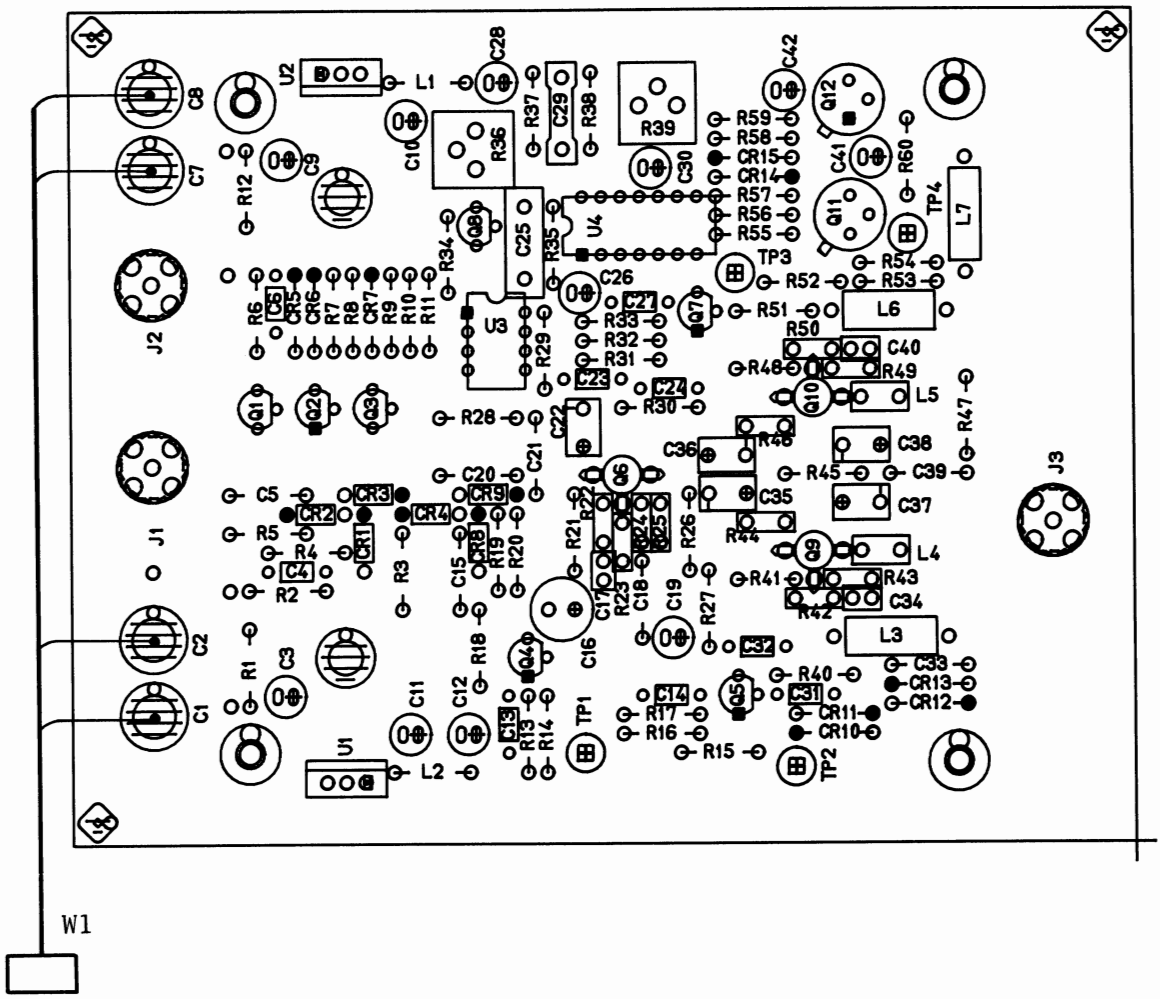

Figure 1. A45 S2 Power Amplifier A46 S1 Power Amplifier Component Locations

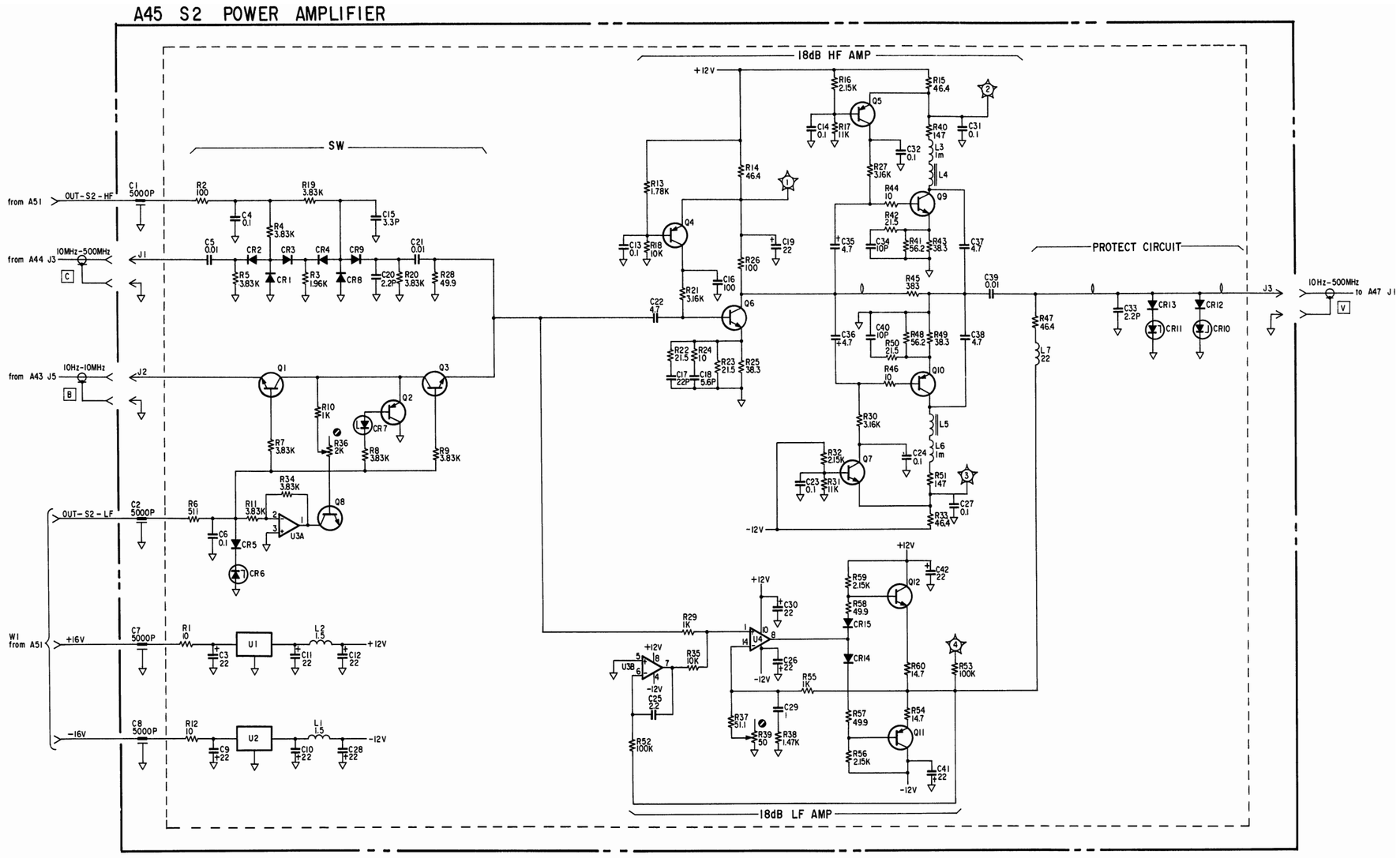
A45 S2 POWER AMPLIFIER
SW
18dB HF AMP
PROTECT CIRCUIT
18dB LF AMP
from A51
OUT-S2-HF
from A44 J3
10MHz-500MHz
from A43 J5
10Hz-10MHz
OUT-S2-LF
W1 from A51
+16V
-16V
J1
J2
J3
10Hz-500MHz to A47 J1
+12V
-12V

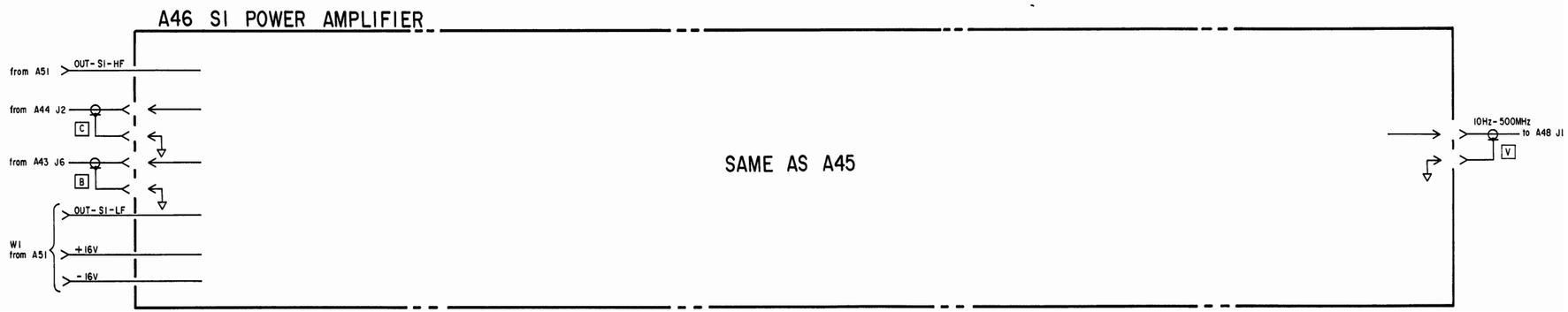
A46 S1 POWER AMPLIFIER
from A51
OUT-S1-HF
from A44 J2
from A43 J6
OUT-S1-LF
W1 from A51
+16V
-16V
SAME AS A45
10Hz-500MHz to A48 J1

NOTES:

1. REFERENCE DESIGNATORS WITHIN THIS ASSEMBLY ARE ABBREVIATED. PREFIX ABBREVIATION WITH ASSEMBLY NUMBER FOR COMPLETE REFERENCE DESIGNATOR.

2. UNLESS OTHERWISE INDICATED:

   RESISTANCE IN OHMS (Ω)
   CAPACITANCE IN MICROFARADS (μF)
   INDUCTANCE IN MICROHENRIES (μH)

3. ADJUSTMENT NAMES

   A45R36
   A45R39

   A46R36
   A46R39

OUTPUT ATTENUATORS SERVICE SHEET

The A47 S2 Output Attenuator and A48 S1 Output Attenuator board assemblies are the respective signal source output attenuators for S2 and S1. A47 and A48 are electrically and physically the same.

CIRCUIT DESCRIPTION

The A47 and A48 boards each contain 5 dB, 10 dB, and 20 dB attenuators which can be switched in series to attenuate the output signal. The attenuation selection relays are driven by control signals from the A51 board.

The attenuation selection is determined by the signal source amplitude setting listed as follows.

Signal Source Amplitude (dBm)	5 dB ATT	10 dB ATT	20 dB ATT	Total Attenuation
+5.0 to +15.0	off	off	off	0 dB
0.0 to +4.9	ON	off	off	5 dB
-5.0 to -0.1	off	ON	off	10 dB
-10.0 to -5.1	ON	ON	off	15 dB
-15.0 to -10.1	off	off	ON	20 dB
-20.0 to -15.1	ON	off	ON	25 dB
-25.0 to -20.1	off	ON	ON	30 dB
-50.0 to -25.1	ON	ON	ON	35 dB

NOTE

The signal source amplitude setting listed above shows the amplitude when using a constant output level. When in the power sweep mode, the attenuators are set appropriately for the STOP level (maximum in the span). The output power is decreased by varying the output of the D-A converter only, the attenuators are not switched while a power sweep is in progress.

Table 1. A47/A48 Replaceable Parts

Reference Designator	HP Part Number	C D	Qty.	Description	Mfr Code	Mfr Part Number
A47, A48						
A47				S2 OUTPUT ATTENUATOR		
A47	04195-66546	5	2	OUTPUT ATT BD AY	28480	04195-66546
A47C1	0160-2437	1	3	CAPACITOR-FDTHRU 5000PF +80 -20% 200V	28480	0160-2437
	2580-0006	8	3	NUT-HEX	28480	2580-0006
	8150-3490	5	3	WIRE	28480	8150-3490
A47C2	0160-2437	1		CAPACITOR-FDTHRU 5000PF +80 -20% 200V	28480	0160-2437
	2580-0006	8		NUT-HEX	28480	2580-0006
	8150-3490	5		WIRE	28480	8150-3490
A47C3	0160-2437	1		CAPACITOR-FDTHRU 5000PF +80 -20% 200V	28480	0160-2437
	2580-0006	8		NUT-HEX	28480	2580-0006
	8150-3490	5		WIRE	28480	8150-3490
A47J1	1250-0836	2	2	CONNECTOR-RF SMC M PC 50-OHM	28480	1250-0836
A47J2	1250-0836	2		CONNECTOR-RF SMC M PC 50-OHM	28480	1250-0836
A47K1-A47K6	0490-1627	8	6	RELAY IC 6VRF	28480	0490-1627
A47R1	0699-2396	2	2	RESISTOR 178.5 .1% .125W TF TC=0+-50	07953	RN14C2B 178.5 OHM B
A47R2	0699-2395	1	1	RESISTOR 30.4 .1% .125W TF TC=0+-50	07953	RN14C2B 30.4 OHM
A47R3	0699-2396	2		RESISTOR 178.5 .1% .125W TF TC=0+-50	07953	RN14C2B 178.5 OHM B
A47R4	0699-1672	5	4	RESISTOR 96.25 .1% .125W F TC=0+-50	28480	0699-1672
A47R5	0699-1673	6	3	RESISTOR 71.15 .1% .125W F TC=0+-50	28480	0699-1673
A47R6	0699-1672	5		RESISTOR 96.25 .1% .125W F TC=0+-50	28480	0699-1672
A47R7	0699-1672	5		RESISTOR 96.25 .1% .125W F TC=0+-50	28480	0699-1672
A47R8	0699-1673	6		RESISTOR 71.15 .1% .125W F TC=0+-50	28480	0699-1673
A47R9	0699-2397	3	1	RESISTOR 48.12 .1% .125W TF TC=0+-50	07953	RN14C2B 48.12 OHM B
A47R10	0699-1673	6		RESISTOR 71.15 .1% .125W F TC=0+-50	28480	0699-1673
A47R11	0699-1672	5		RESISTOR 96.25 .1% .125W F TC=0+-50	28480	0699-1672
A47W1	04195-61670	6	1	WIRE ASSEMBLY 4PIN	28480	04195-61670
A48				S1 OUTPUT ATTENUATOR		
48	04195-66546	5		OUTPUT ATT BD AY SAME AS A47	28480	04195-66546
	04195-00908		1	CASE SHIELD, A47 CIRCUIT SIDE		
	04195-00906		1	CASE SHIELD, BETWEEN A47 AND A48		

*** Indicates factory selected value.**

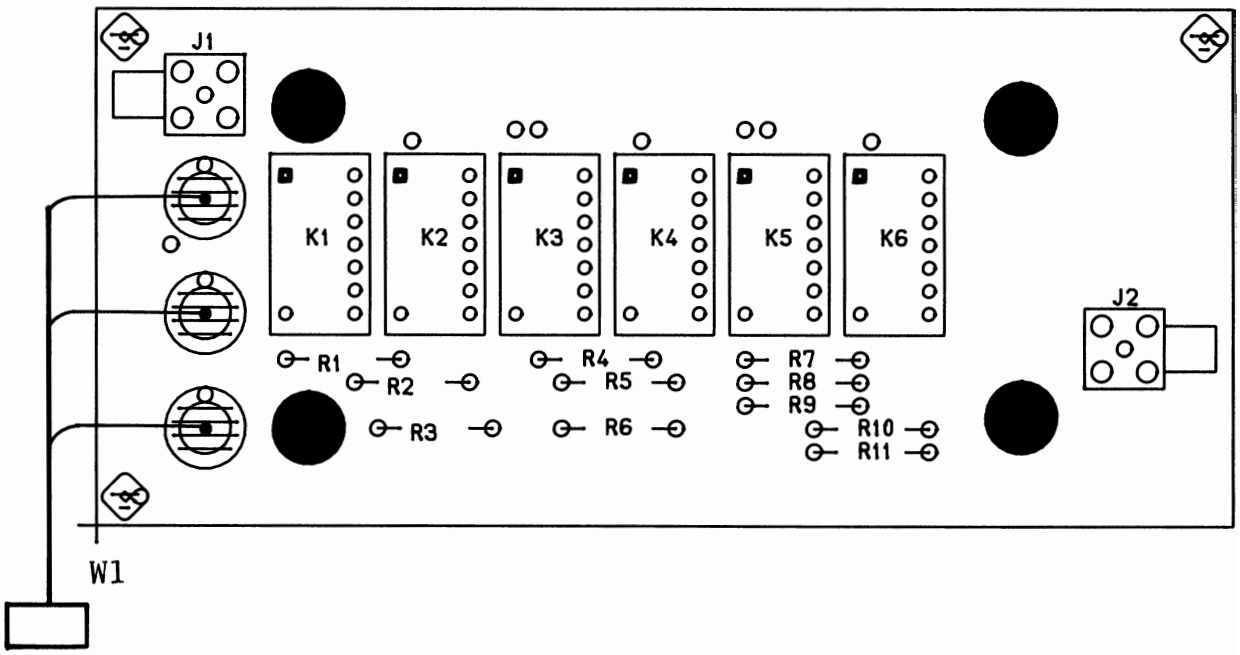

Figure 1. A47 S2 Output Attenuator and A48 S1 Output Attenuator Component Locations

A47 S2 OUTPUT ATTENUATOR

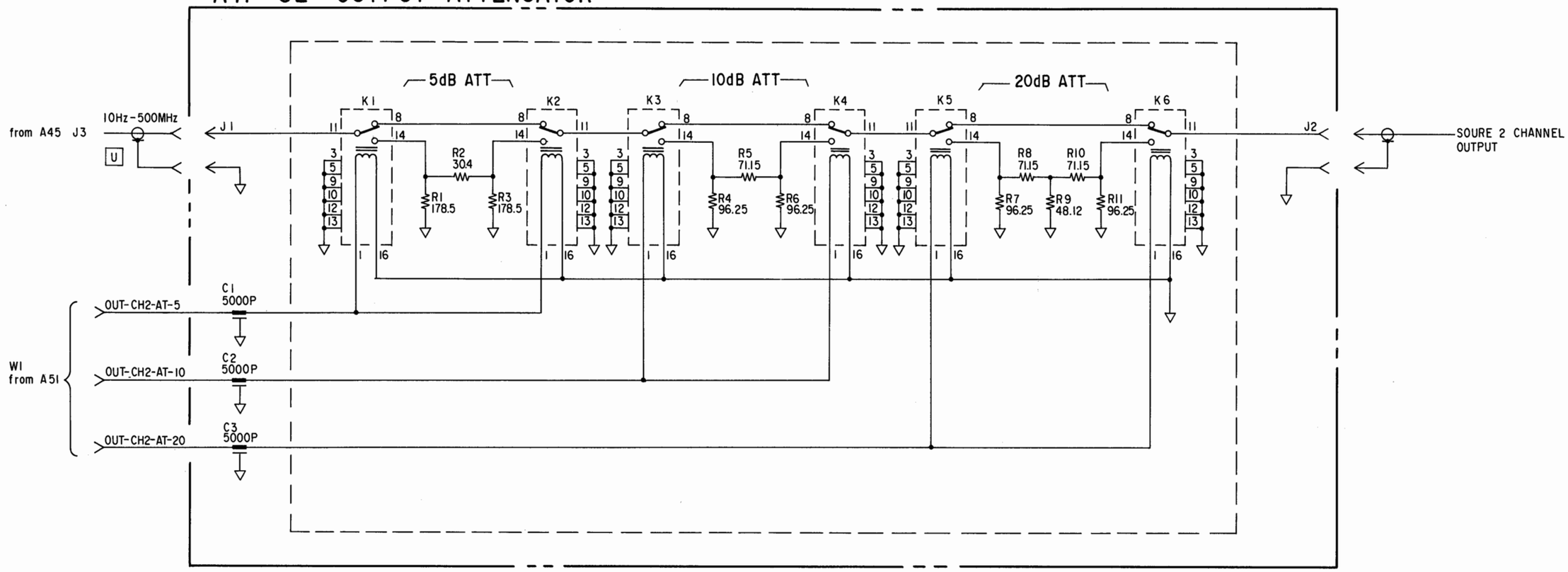

A48 S1 OUTPUT ATTENUATOR

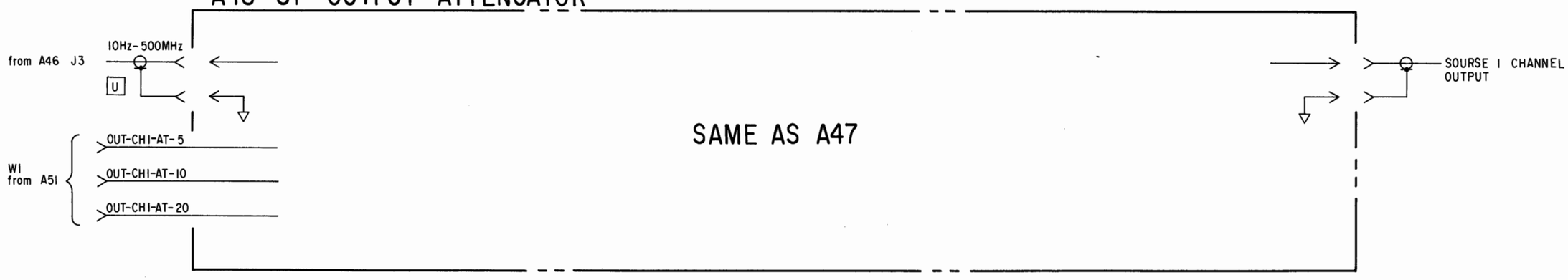

RECEIVER CIRCUIT CONTROL SERVICE SHEET

The A50 Receiver Circuit Control board assembly sends and receives signals to and from the board assemblies installed in the bottom section of the measurement unit (lower chassis).

CIRCUIT DESCRIPTION

The A50 board consists of, (1) Control Voltage source for A23's Voltage-Tunable-Bandpass Filters, (2) Signal Source Amplitude (OSC level) control D-A converter, and (3) Circuits to generate the other receiver circuit control signals.

VOLTAGE TUNABLE BANDPASS FILTERS' VOLTAGE SOURCES

The control voltage for the Voltage-Tunable-Bandpass filters (LOW, MID, and HIGH) on A23 originate on this board. The data used to create these control voltages originates on the A8 board and is sent to this board as serial data via the A15 board. U27 performs the serial to parallel data conversion, U26 converts the parallel data to an analog current, and U25D performs a current to voltage conversion. The voltage is applied in parallel through resistors to amplifiers U25A, U25B, and U25C.

The following Figure shows a simplified diagram of an amplifier. (Reference designations in the following explanation refer to the low-band-filter's voltage source circuit. The other two source circuits are identical.)

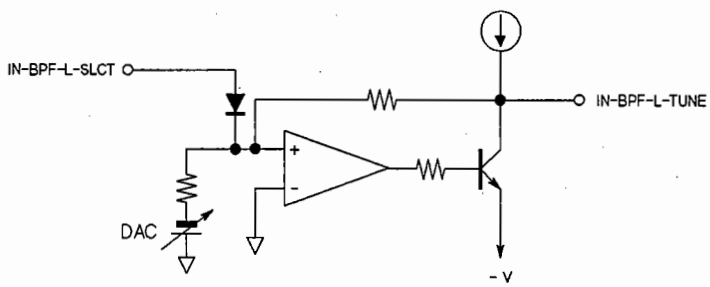

When the low-band-filter source is selected, the IN-BPF-L-SLCT selection signal goes negative, reverse biasing CR4 to remove the positive voltage from the summing node enabling U25C to amplify the signal output form the DAC circuit. Q1 acts as a current source, whose current magnitude is determined by the zener voltage of CR1 and the resistance of R21. The output voltage of the D-A converter (U25D) is multiplied by the resistance ratio (R47 + R49)÷R45 in the inverting amplifier circuit formed by U25C and Q2.

When the low-band-filter source is not selected, the IN-BPF-L-SLCT selection signal is positive, forward biasing CR4 to adding the positive voltage to the summing node. As a result the tuning voltage (IN-BPF-L-TUNE) will be driven negative, completely detuning the low band filter and effectively eliminating its effect on the signal.

SIGNAL SOURCE AMPLITUDE (OSC LEVEL) CONTROL D-A CONVERTER

The signal source's amplitude control data originates on the A8 board and is sent to this board as serial data via A15. U18, U19, U21, and U17 perform serial to parallel data conversion, U22 and U16 convert the parallel data into an analog current, and U15A and U15B perform a current to voltage conversion. U22's 6.3 V reference voltage is generated on the A51 board. The output voltage of U15A is used as the reference voltage for U16.

Table 1. A50 Replaceable Parts (1 of 3)

Reference Designator	HP Part Number	C D	Qty.	Description	Mfr Code	Mfr Part Number
A50				RECEIVER CIRCUIT CONTROL		
A50	04195-66550	1	1	D/A INT FACE BD	28480	04195-66550
A50C1	0180-3603	7	3	CAPACITOR-FXD 10UF+-20% 100VDC AL	28480	0180-3603
A50C2	0180-3603	7		CAPACITOR-FXD 10UF+-20% 100VDC AL	28480	0180-3603
A50C3	0180-3363	6	8	CAPACITOR-FXD 22UF+-20% 25VDC AL	28480	0180-3363
A50C4	0180-3363	6		CAPACITOR-FXD 22UF+-20% 25VDC AL	28480	0180-3363
A50C5	0180-3363	6		CAPACITOR-FXD 22UF+-20% 25VDC AL	28480	0180-3363
A50C6	0180-3363	6		CAPACITOR-FXD 22UF+-20% 25VDC AL	28480	0180-3363
A50C7	0180-3363	6		CAPACITOR-FXD 22UF+-20% 25VDC AL	28480	0180-3363
A50C8	0180-3363	6		CAPACITOR-FXD 22UF+-20% 25VDC AL	28480	0180-3363
A50C9	0160-6561	0	29	CAPACITOR-FXD .1UF +-20% 50VDC CER	16299	CAC02Z5U104M050A
A50C10	0160-6561	0		CAPACITOR-FXD .1UF +-20% 50VDC CER	16299	CAC02Z5U104M050A
A50C11	0160-6561	0		CAPACITOR-FXD .1UF +-20% 50VDC CER	16299	CAC02Z5U104M050A
A50C12	0160-6561	0		CAPACITOR-FXD .1UF +-20% 50VDC CER	16299	CAC02Z5U104M050A
A50C13	0160-6561	0		CAPACITOR-FXD .1UF +-20% 50VDC CER	16299	CAC02Z5U104M050A
A50C14	0160-6561	0		CAPACITOR-FXD .1UF +-20% 50VDC CER	16299	CAC02Z5U104M050A
A50C15	0160-6561	0		CAPACITOR-FXD .1UF +-20% 50VDC CER	16299	CAC02Z5U104M050A
A50C16	0160-6561	0		CAPACITOR-FXD .1UF +-20% 50VDC CER	16299	CAC02Z5U104M050A
A50C17	0160-6561	0		CAPACITOR-FXD .1UF +-20% 50VDC CER	16299	CAC02Z5U104M050A
A50C18	0160-6561	0		CAPACITOR-FXD .1UF +-20% 50VDC CER	16299	CAC02Z5U104M050A
A50C19	0160-6561	0		CAPACITOR-FXD .1UF +-20% 50VDC CER	16299	CAC02Z5U104M050A
A50C20	0160-6561	0		CAPACITOR-FXD .1UF +-20% 50VDC CER	16299	CAC02Z5U104M050A
A50C21	0160-6561	0		CAPACITOR-FXD .1UF +-20% 50VDC CER	16299	CAC02Z5U104M050A
A50C22	0160-6561	0		CAPACITOR-FXD .1UF +-20% 50VDC CER	16299	CAC02Z5U104M050A
A50C23	0160-6561	0		CAPACITOR-FXD .1UF +-20% 50VDC CER	16299	CAC02Z5U104M050A
A50C24	0160-6561	0		CAPACITOR-FXD .1UF +-20% 50VDC CER	16299	CAC02Z5U104M050A
A50C25	0160-6561	0		CAPACITOR-FXD .1UF +-20% 50VDC CER	16299	CAC02Z5U104M050A
A50C26	0180-3363	6		CAPACITOR-FXD 22UF+-20% 25VDC AL	28480	0180-3363
A50C27	0180-3363	6		CAPACITOR-FXD 22UF+-20% 25VDC AL	28480	0180-3363
A50C28	0160-6561	0		CAPACITOR-FXD .1UF +-20% 50VDC CER	16299	CAC02Z5U104M050A
A50C29	0180-3603	7		CAPACITOR-FXD 10UF+-20% 100VDC AL	28480	0180-3603
A50C30	0160-4801	7	3	CAPACITOR-FXD 100PF +-5% 100VDC CER	28480	0160-4801
A50C31	0160-4812	0	3	CAPACITOR-FXD 220PF +-5% 100VDC CER	28480	0160-4812
A50C32	0160-4812	0		CAPACITOR-FXD 220PF +-5% 100VDC CER	28480	0160-4812
A50C33	0160-4801	7		CAPACITOR-FXD 100PF +-5% 100VDC CER	28480	0160-4801
A50C34	0160-6561	0		CAPACITOR-FXD .1UF +-20% 50VDC CER	16299	CAC02Z5U104M050A
A50C35	0160-6561	0		CAPACITOR-FXD .1UF +-20% 50VDC CER	16299	CAC02Z5U104M050A
A50C36	0160-6561	0		CAPACITOR-FXD .1UF +-20% 50VDC CER	16299	CAC02Z5U104M050A
A50C37	0160-6561	0		CAPACITOR-FXD .1UF +-20% 50VDC CER	16299	CAC02Z5U104M050A
A50C38	0160-6561	0		CAPACITOR-FXD .1UF +-20% 50VDC CER	16299	CAC02Z5U104M050A
A50C39	0160-6561	0		CAPACITOR-FXD .1UF +-20% 50VDC CER	16299	CAC02Z5U104M050A
A50C40	0160-6561	0		CAPACITOR-FXD .1UF +-20% 50VDC CER	16299	CAC02Z5U104M050A
A50C41	0160-4801	7		CAPACITOR-FXD 100PF +-5% 100VDC CER	28480	0160-4801
A50C42	0160-4812	0		CAPACITOR-FXD 220PF +-5% 100VDC CER	28480	0160-4812
A50C43	0160-6561	0		CAPACITOR-FXD .1UF +-20% 50VDC CER	16299	CAC02Z5U104M050A
A50C44	0160-6561	0		CAPACITOR-FXD .1UF +-20% 50VDC CER	16299	CAC02Z5U104M050A
A50C45	0160-6561	0		CAPACITOR-FXD .1UF +-20% 50VDC CER	16299	CAC02Z5U104M050A
A50C46	0160-4791	4	1	CAPACITOR-FXD 10PF +-5% 100VDC CER 0+-30	28480	0160-4791
A50C47	0160-6561	0		CAPACITOR-FXD .1UF +-20% 50VDC CER	16299	CAC02Z5U104M050A
A50C48	0160-6561	0		CAPACITOR-FXD .1UF +-20% 50VDC CER	16299	CAC02Z5U104M050A
A50C49	0160-6561	0		CAPACITOR-FXD .1UF +-20% 50VDC CER	16299	CAC02Z5U104M050A
A50C50	0160-4805	1	2	CAPACITOR-FXD 47PF +-5% 100VDC CER 0+-30	28480	0160-4805
A50C51	0160-4805	1		CAPACITOR-FXD 47PF +-5% 100VDC CER 0+-30	28480	0160-4805

*** Indicates factory selected value.**

Table 1. A50 Replaceable Parts (2 of 3)

Reference Designator	HP Part Number	C D	Qty.	Description	Mfr Code	Mfr Part Number
A50CR1	1902-0948	0	1	DIODE-ZNR 3.9V 5% DO-35 PD=.4W TC=-.012%	28480	1902-0948
A50CR2	1901-0050	3	3	DIODE-SWITCHING 80V 200MA 2NS DO-35	9N171	1N4150
A50CR3	1901-0050	3		DIODE-SWITCHING 80V 200MA 2NS DO-35	9N171	1N4150
A50CR4	1901-0050	3		DIODE-SWITCHING 80V 200MA 2NS DO-35	9N171	1N4150
A50J1	1252-2252	4	1	CONN-RECT D-SUBMIN 9-CKT 9-CONT	06394	RDED-9PE-LNA (4-40)
A50J2	1252-2023	7	1	CONN-RECT MICRORBN 50-CKT 50-CONT	05880	57LE-40500-77CO(029)
A50J3				NOT ASSIGNED		
A50J4				NOT ASSIGNED		
A50J5	1200-0541	1	1	SOCKET-IC 24-CONT DIP DIP-SLDR	28480	1200-0541
A50Q1	1853-0232	0	3	TRANSISTOR PNP SI TO-39 PD=1W FT=200MHZ	28480	1853-0232
A50Q2	1854-0474	4		TRANSISTOR NPN SI PD=310MW FT=100MHZ	04713	2N5551
A50Q3	1853-0232	0		TRANSISTOR PNP SI TO-39 PD=1W FT=200MHZ	28480	1853-0232
A50Q4	1854-0474	4		TRANSISTOR NPN SI PD=310MW FT=100MHZ	04713	2N5551
A50Q5	1853-0232	0		TRANSISTOR PNP SI TO-39 PD=1W FT=200MHZ	28480	1853-0232
A50Q6	1854-0474	4		TRANSISTOR NPN SI PD=310MW FT=100MHZ	04713	2N5551
A50R1	0757-0401	0	2	RESISTOR 100 1% .125W F TC=0+-100	24546	CT4-1/8-T0-101-F
A50R2	0757-0401	0		RESISTOR 100 1% .125W F TC=0+-100	24546	CT4-1/8-T0-101-F
A50R3	0757-0442	9	7	RESISTOR 10K 1% .125W F TC=0+-100	24546	CT4-1/8-T0-1002-F
A50R4	0757-0461	2	4	RESISTOR 68.1K 1% .125W F TC=0+-100	24546	CT4-1/8-T0-6812-F
A50R5	0757-0280	3	12	RESISTOR 1K 1% .125W F TC=0+-100	24546	CT4-1/8-T0-1001-F
A50R6	0757-0442	9		RESISTOR 10K 1% .125W F TC=0+-100	24546	CT4-1/8-T0-1002-F
A50R7	0757-0461	2		RESISTOR 68.1K 1% .125W F TC=0+-100	24546	CT4-1/8-T0-6812-F
A50R8	0757-0442	9		RESISTOR 10K 1% .125W F TC=0+-100	24546	CT4-1/8-T0-1002-F
A50R9	0757-0461	2		RESISTOR 68.1K 1% .125W F TC=0+-100	24546	CT4-1/8-T0-6812-F
A50R10	0757-0280	3		RESISTOR 1K 1% .125W F TC=0+-100	24546	CT4-1/8-T0-1001-F
A50R11	0757-0346	2	2	RESISTOR 10 1% .125W F TC=0+-100	28480	0757-0346
A50R12	0698-3156	2	2	RESISTOR 14.7K 1% .125W F TC=0+-100	24546	CT4-1/8-T0-1472-F
A50R13	0757-0444	1	2	RESISTOR 12.1K 1% .125W F TC=0+-100	24546	CT4-1/8-T0-1212-F
A50R14	0698-3156	2		RESISTOR 14.7K 1% .125W F TC=0+-100	24546	CT4-1/8-T0-1472-F
A50R15	0757-0444	1		RESISTOR 12.1K 1% .125W F TC=0+-100	24546	CT4-1/8-T0-1212-F
A50R16	0757-0394	0	1	RESISTOR 51.1 1% .125W F TC=0+-100	24546	CT4-1/8-T0-51R1-F
A50R17	0698-3435	0	1	RESISTOR 38.3 1% .125W F TC=0+-100	28480	0698-3435
A50R18	0698-0084	9	3	RESISTOR 2.15K 1% .125W F TC=0+-100	24546	CT4-1/8-T0-2151-F
A50R19	0698-3160	8	4	RESISTOR 31.6K 1% .125W F TC=0+-100	24546	CT4-1/8-T0-3162-F
A50R20	0698-3160	8		RESISTOR 31.6K 1% .125W F TC=0+-100	24546	CT4-1/8-T0-3162-F
A50R21	0757-0280	3		RESISTOR 1K 1% .125W F TC=0+-100	24546	CT4-1/8-T0-1001-F
A50R22	0757-0416	7	3	RESISTOR 511 1% .125W F TC=0+-100	24546	CT4-1/8-T0-511R-F
A50R23	0698-0084	9		RESISTOR 2.15K 1% .125W F TC=0+-100	24546	CT4-1/8-T0-2151-F
A50R24	0698-3160	8		RESISTOR 31.6K 1% .125W F TC=0+-100	24546	CT4-1/8-T0-3162-F
A50R25	0757-0442	9		RESISTOR 10K 1% .125W F TC=0+-100	24546	CT4-1/8-T0-1002-F
A50R26	0698-3161	9	3	RESISTOR 38.3K 1% .125W F TC=0+-100	24546	CT4-1/8-T0-3832-F
A50R27	0757-0442	9		RESISTOR 10K 1% .125W F TC=0+-100	24546	CT4-1/8-T0-1002-F
A50R28	0698-3446	3	3	RESISTOR 383 1% .125W F TC=0+-100	24546	CT4-1/8-T0-383R-F
A50R29	0698-3457	6	3	RESISTOR 316K 1% .125W F TC=0+-100	28480	0698-3457
A50R30	0757-0280	3		RESISTOR 1K 1% .125W F TC=0+-100	24546	CT4-1/8-T0-1001-F
A50R31	0757-0416	7		RESISTOR 511 1% .125W F TC=0+-100	24546	CT4-1/8-T0-511R-F
A50R32	0698-3454	3	3	RESISTOR 215K 1% .125W F TC=0+-100	24546	CT4-1/8-T0-2153-F
A50R33	0757-0280	3		RESISTOR 1K 1% .125W F TC=0+-100	24546	CT4-1/8-T0-1001-F
A50R34	0757-0442	9		RESISTOR 10K 1% .125W F TC=0+-100	24546	CT4-1/8-T0-1002-F
A50R35	0757-0280	3		RESISTOR 1K 1% .125W F TC=0+-100	24546	CT4-1/8-T0-1001-F
A50R36	0757-0416	7		RESISTOR 511 1% .125W F TC=0+-100	24546	CT4-1/8-T0-511R-F
A50R37	0698-0084	9		RESISTOR 2.15K 1% .125W F TC=0+-100	24546	CT4-1/8-T0-2151-F
A50R38	0698-3160	8		RESISTOR 31.6K 1% .125W F TC=0+-100	24546	CT4-1/8-T0-3162-F

*** Indicates factory selected value.**

Table 1. A50 Replaceable Parts (3 of 3)

Reference Designator	HP Part Number	C D	Qty.	Description	Mfr Code	Mfr Part Number
A50R39	0757-0280	3		RESISTOR 1K 1% .125W F TC=0+-100	24546	CT4-1/8-T0-1001-F
A50R40	0698-3457	6		RESISTOR 316K 1% .125W F TC=0+-100	28480	0698-3457
A50R41	0698-3454	3		RESISTOR 215K 1% .125W F TC=0+-100	24546	CT4-1/8-T0-2153-F
A50R42	0757-0280	3		RESISTOR 1K 1% .125W F TC=0+-100	24546	CT4-1/8-T0-1001-F
A50R43	0757-0280	3		RESISTOR 1K 1% .125W F TC=0+-100	24546	CT4-1/8-T0-1001-F
A50R44	0698-3457	6		RESISTOR 316K 1% .125W F TC=0+-100	28480	0698-3457
A50R45	0698-3454	3		RESISTOR 215K 1% .125W F TC=0+-100	24546	CT4-1/8-T0-2153-F
A50R46	0757-0280	3		RESISTOR 1K 1% .125W F TC=0+-100	24546	CT4-1/8-T0-1001-F
A50R47	0698-3446	3		RESISTOR 383 1% .125W F TC=0+-100	24546	CT4-1/8-T0-383R-F
A50R48	0757-0280	3		RESISTOR 1K 1% .125W F TC=0+-100	24546	CT4-1/8-T0-1001-F
A50R49	0698-3161	9		RESISTOR 38.3K 1% .125W F TC=0+-100	24546	CT4-1/8-T0-3832-F
A50R50	0757-0346	2		RESISTOR 10 1% .125W F TC=0+-100	28480	0757-0346
A50R51	0698-3446	3		RESISTOR 383 1% .125W F TC=0+-100	24546	CT4-1/8-T0-383R-F
A50R52	0698-3161	9		RESISTOR 38.3K 1% .125W F TC=0+-100	24546	CT4-1/8-T0-3832-F
A50R53	0757-0395	1	1	RESISTOR 56.2 1% .125W F TC=0+-100	24546	CT4-1/8-T0-56R2-F
A50R54	0757-0280	3		RESISTOR 1K 1% .125W F TC=0+-100	24546	CT4-1/8-T0-1001-F
A50R55	0757-0461	2		RESISTOR 68.1K 1% .125W F TC=0+-100	24546	CT4-1/8-T0-6812-F
A50R56	0757-0442	9		RESISTOR 10K 1% .125W F TC=0+-100	24546	CT4-1/8-T0-1002-F
A50U1	1826-0122	0	1	IC 7805 V RGLTR TO-220	07263	7805UC
A50U2	1826-0221	0	1	IC V RGLTR TO-220	04713	MC7912CT
A50U3	1826-0147	9	1	IC 7812 V RGLTR TO-220	04713	MC7812CP
A50U4	1820-3707	1	5	IC DRVR TTL ALS LINE OCTL	01295	SN74ALS541N
A50U5	1820-2922	0	2	IC GATE CMOS/74HC NAND QUAD 2-INP	04713	MC74HC00N
A50U6	1826-0522	4	6	IC OP AMP LOW-BIAS-H-IMPD QUAD 14-DIP-P	01295	TL074CN
A50U7	1820-3707	1		IC DRVR TTL ALS LINE OCTL	01295	SN74ALS541N
A50U8	1820-3344	2	8	IC SHF-RGTR CMOS/74HC ASYNCHRO SERIAL-IN	04713	MC74HC595N
A50U9	1826-0522	4		IC OP AMP LOW-BIAS-H-IMPD QUAD 14-DIP-P	01295	TL074CN
A50U10	1820-3707	1		IC DRVR TTL ALS LINE OCTL	01295	SN74ALS541N
A50U11	1820-3707	1		IC DRVR TTL ALS LINE OCTL	01295	SN74ALS541N
A50U12	1826-0522	4		IC OP AMP LOW-BIAS-H-IMPD QUAD 14-DIP-P	01295	TL074CN
A50U13	1820-3344	2		IC SHF-RGTR CMOS/74HC ASYNCHRO SERIAL-IN	04713	MC74HC595N
A50U14	1820-3707	1		IC DRVR TTL ALS LINE OCTL	01295	SN74ALS541N
A50U15	1826-0522	4		IC OP AMP LOW-BIAS-H-IMPD QUAD 14-DIP-P	01295	TL074CN
A50U16	1826-1386	0	2	D/A 12-BIT 18-PLASTIC CMOS	24355	AD11/548
A50U17	1820-3344	2		IC SHF-RGTR CMOS/74HC ASYNCHRO SERIAL-IN	04713	MC74HC595N
A50U18	1820-3344	2		IC SHF-RGTR CMOS/74HC ASYNCHRO SERIAL-IN	04713	MC74HC595N
A50U19	1820-3344	2		IC SHF-RGTR CMOS/74HC ASYNCHRO SERIAL-IN	04713	MC74HC595N
A50U20	1820-2635	2	2	IC GATE TTL ALS AND QUAD 2-INP	01295	SN74ALS08N
A50U21	1820-3344	2		IC SHF-RGTR CMOS/74HC ASYNCHRO SERIAL-IN	04713	MC74HC595N
A50U22	1826-1386	0		D/A 12-BIT 18-PLASTIC CMOS	24355	AD11/548
A50U23	1820-2922	0		IC GATE CMOS/74HC NAND QUAD 2-INP	04713	MC74HC00N
A50U24	1820-2635	2		IC GATE TTL ALS AND QUAD 2-INP	01295	SN74ALS08N
A50U25	1826-0522	4		IC OP AMP LOW-BIAS-H-IMPD QUAD 14-DIP-P	01295	TL074CN
A50U26	1826-0707	7	1	D/A 8-BIT 16-PLASTIC CMOS	24355	AD7523JN
A50U27	1820-3344	2		IC SHF-RGTR CMOS/74HC ASYNCHRO SERIAL-IN	04713	MC74HC595N
A50U28	1826-0522	4		IC OP AMP LOW-BIAS-H-IMPD QUAD 14-DIP-P	01295	TL074CN
A50U29	1820-3344	2		IC SHF-RGTR CMOS/74HC ASYNCHRO SERIAL-IN	04713	MC74HC595N
A50U30	1826-0519	9	1	IC OP AMP LOW-BIAS-H-IMPD 8-DIP-P PKG	01295	TL071CP
A50W1	04195-65008	2	1	FLAT CABLE ASSEMBLY 50PIN	28480	04195-65008
A50W2	04195-65007	1	1	FLAT CABLE ASSEMBLY 40PIN	28480	04195-65007

*** Indicates factory selected value.**

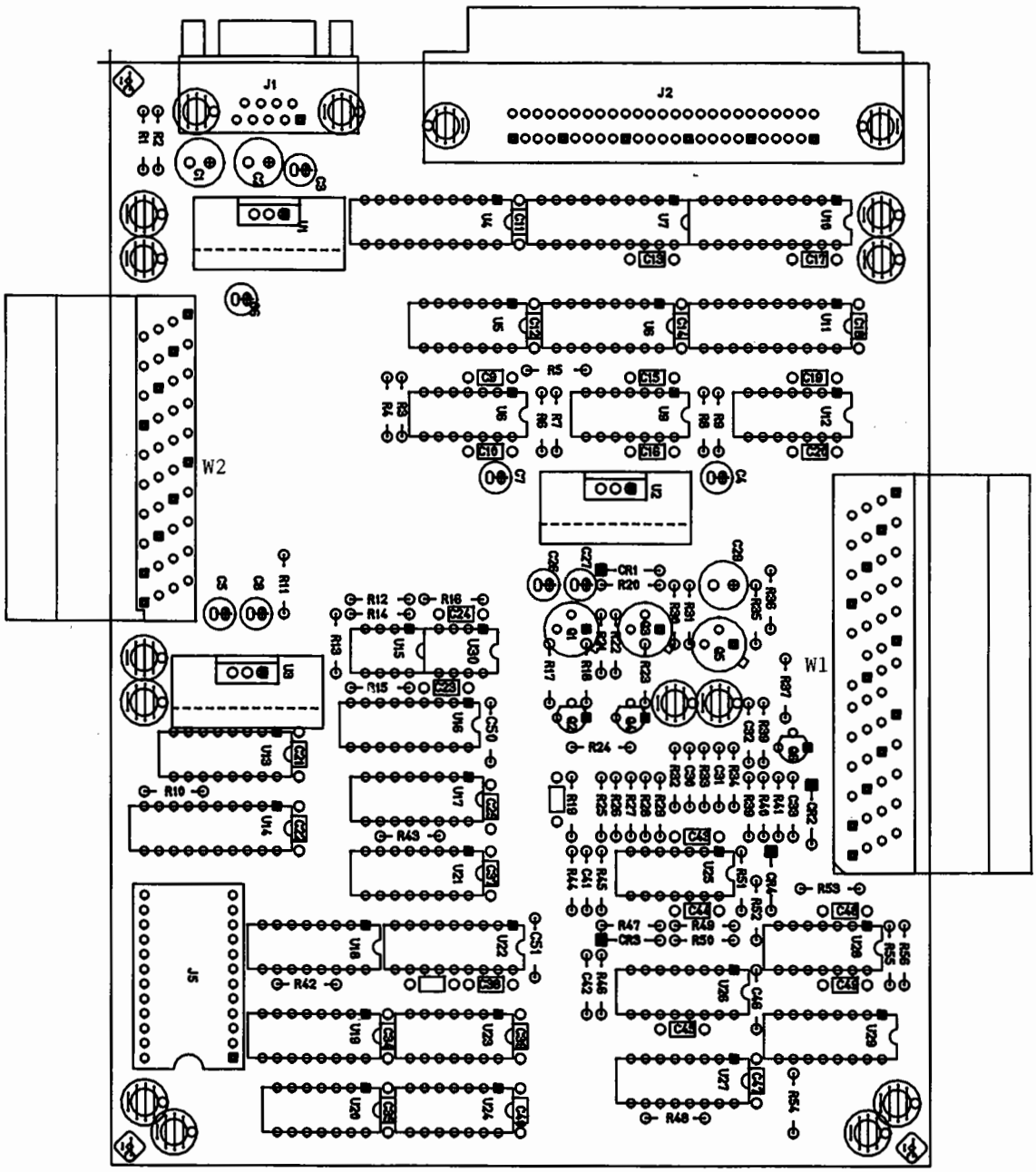

Figure 1. A50 Receiver Circuit Control Component Locations

A50 RECEIVER CIRCUIT CONTROL

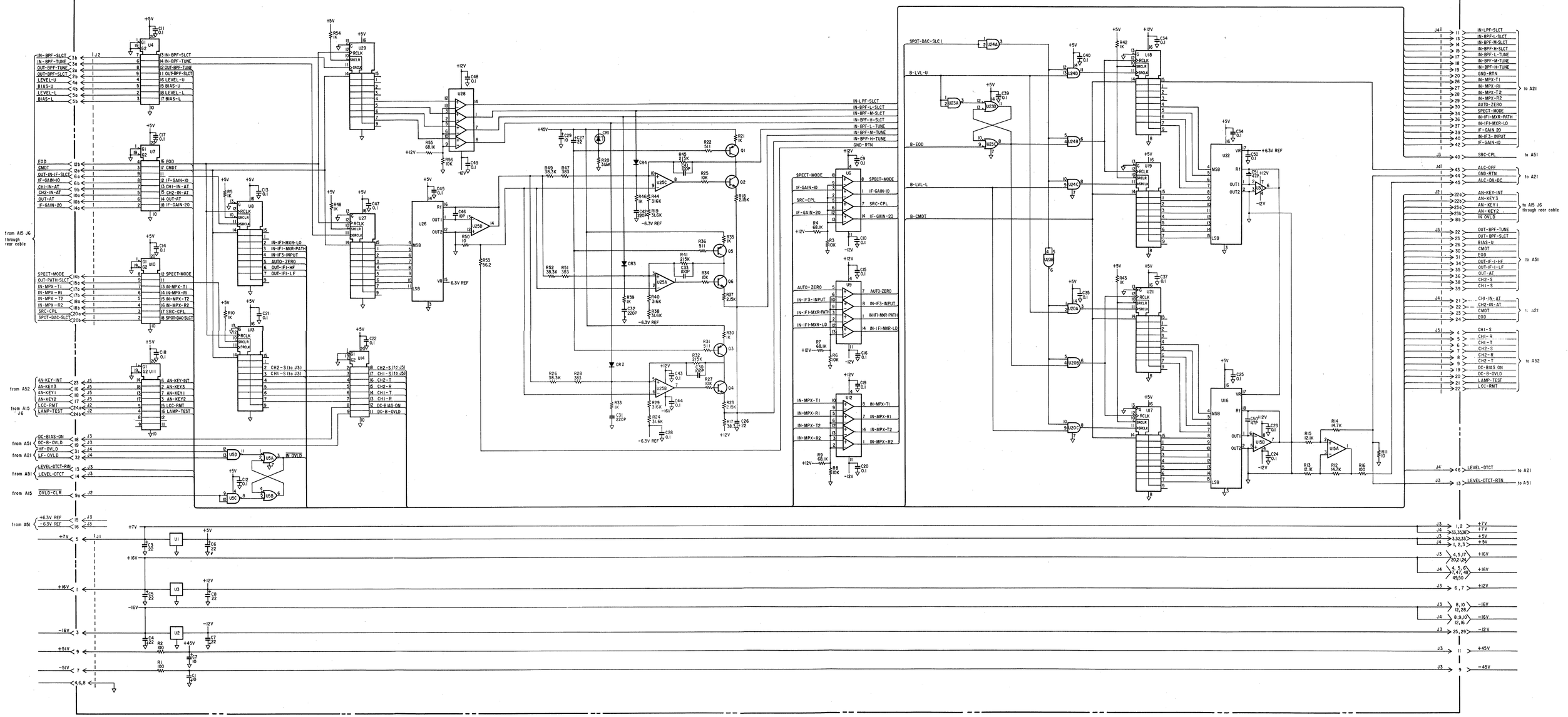

SOURCE CIRCUIT CONTROL SERVICE SHEET

The A51 Source Circuit Control board assembly sends and receives signals to and from the board assemblies installed in the upper section of the measurement unit (lower chassis).

CIRCUIT DESCRIPTION

The A51 board consists of (1) Control Voltage source for A44's Voltage-Tunable-Bandpass Filters, (2) DC voltage source, and (3) Circuits that generate other signal source control signals.

VOLTAGE TUNABLE BANDPASS FILTERS' VOLTAGE SOURCES

The control voltage for the Voltage-Tunable-Bandpass filters on A44 are generated on this board. The filter control voltage data originates on the A8 board and is sent to this board as serial data via the A15 and A50 boards. U19 performs a serial to parallel data conversion, U18 converts the parallel data to an analog current, and U16D performs a current to voltage conversion. The voltage is fed in parallel through resistors to amplifiers U16A, U16B, and U16C.

The following Figure shows a simplified diagram of an amplifier. (The reference designations in the following explanation refer to the low-band-filter's voltage source circuit. The other two sources use the same circuit.)

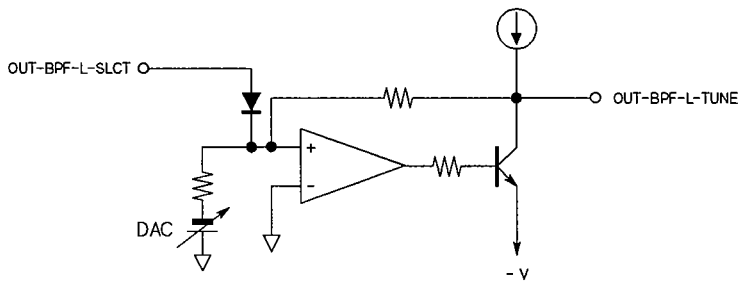

When the low-band-filter source is selected, the OUT-BPF-L-SCLT selection signal goes negative, reverse biasing CR14 to remove the positive voltage from the summing node enabling U16C to amplify the signal. Q10 acts as a current source, whose current magnitude is determined by the zener voltage of CR13 and the resistance of R45. The output voltage of D-A converter U16D is multiplied by the resistance ratio of (R63 + R64)÷R66 of the inverting amplifier circuit formed by U16C and Q13.

When the low-band-filter source is not selected, the OUT-BPF-L-SCLT selection signal goes positive, forward biasing CR14 to add the positive voltage to the summing node. As a result the tuning voltage (OUT-BPF-L-TUNE) will be driven negative, completely detuning the low-band-filter and effectively eliminating its effect on the signal.

DC VOLTAGE VOLTAGE SOURCE

The dc source's control data originates on the A8 board and is sent as serial data to this board via the A15 and A50 boards. U7 and U11 perform a serial to parallel data conversion, U10 converts the parallel data to an analog current, and U5 performs a current to voltage conversion. The voltage is then applied to dc power amplifier U9, etc.

CR5 generates the reference voltage for the dc reference source. U3A buffers the output of CR5, and U3B is a unity gain inverter. U4 is used to select one of two inputs (U3A and U3B) to select the **DC SOURCE** output voltage polarity.

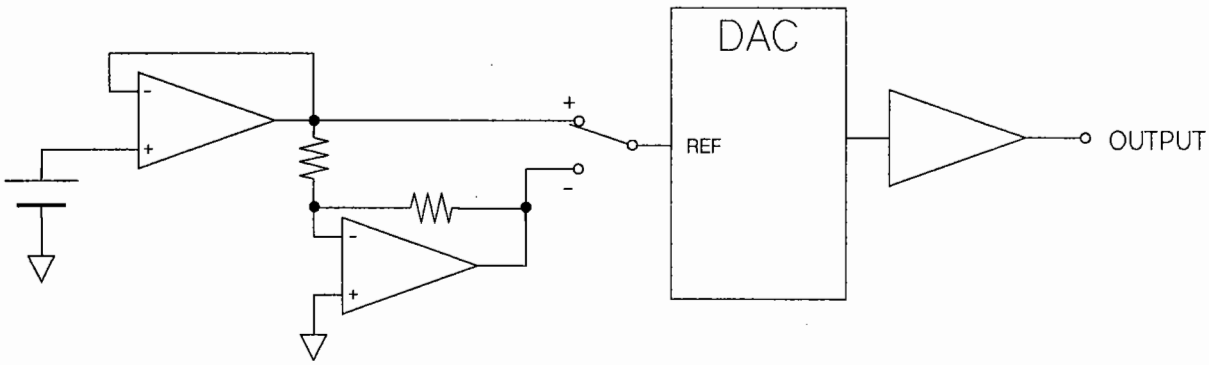

Table 1. A51 Replaceable Parts (1 of 4)

Reference Designator	HP Part Number	C D	Qty.	Description	Mfr Code	Mfr Part Number
A51				SOURCE CIRCUIT CONTROL		
A51	04195-66551	2	1	A23/A24 CTRL BD	28480	04195-66551
A51C1	0160-6561	0	25	CAPACITOR-FXD .1UF +-20% 50VDC CER	16299	CAC02Z5U104M050A
A51C2	0160-6561	0		CAPACITOR-FXD .1UF +-20% 50VDC CER	16299	CAC02Z5U104M050A
A51C3	0180-3603	7	3	CAPACITOR-FXD 10UF+-20% 100VDC AL	28480	0180-3603
A51C4	0180-3603	7		CAPACITOR-FXD 10UF+-20% 100VDC AL	28480	0180-3603
A51C5	0180-3593	4	1	CAPACITOR-FXD 330UF+-20% 25VDC AL	28480	0180-3593
A51C6	0160-6561	0		CAPACITOR-FXD .1UF +-20% 50VDC CER	16299	CAC02Z5U104M050A
A51C7	0160-6561	0		CAPACITOR-FXD .1UF +-20% 50VDC CER	16299	CAC02Z5U104M050A
A51C8	0160-6561	0		CAPACITOR-FXD .1UF +-20% 50VDC CER	16299	CAC02Z5U104M050A
A51C9	0160-6561	0		CAPACITOR-FXD .1UF +-20% 50VDC CER	16299	CAC02Z5U104M050A
A51C10	0160-6561	0		CAPACITOR-FXD .1UF +-20% 50VDC CER	16299	CAC02Z5U104M050A
A51C11	0160-6561	0		CAPACITOR-FXD .1UF +-20% 50VDC CER	16299	CAC02Z5U104M050A
A51C12	0160-6561	0		CAPACITOR-FXD .1UF +-20% 50VDC CER	16299	CAC02Z5U104M050A
A51C13	0160-4789	0	1	CAPACITOR-FXD 15PF +-5% 100VDC CER 0+-30	28480	0160-4789
A51C14	0160-6561	0		CAPACITOR-FXD .1UF +-20% 50VDC CER	16299	CAC02Z5U104M050A
A51C15	0160-6561	0		CAPACITOR-FXD .1UF +-20% 50VDC CER	16299	CAC02Z5U104M050A
A51C16	0160-6561	0		CAPACITOR-FXD .1UF +-20% 50VDC CER	16299	CAC02Z5U104M050A
A51C17	0160-4808	4	1	CAPACITOR-FXD 470PF +-5% 100VDC CER	28480	0160-4808
A51C18	0160-6561	0		CAPACITOR-FXD .1UF +-20% 50VDC CER	16299	CAC02Z5U104M050A
A51C19	0160-6561	0		CAPACITOR-FXD .1UF +-20% 50VDC CER	16299	CAC02Z5U104M050A
A51C20	0160-6561	0		CAPACITOR-FXD .1UF +-20% 50VDC CER	16299	CAC02Z5U104M050A
A51C21	0160-6561	0		CAPACITOR-FXD .1UF +-20% 50VDC CER	16299	CAC02Z5U104M050A
A51C22	0160-6561	0		CAPACITOR-FXD .1UF +-20% 50VDC CER	16299	CAC02Z5U104M050A
A51C23	0180-3363	6	2	CAPACITOR-FXD 22UF+-20% 25VDC AL	28480	0180-3363
A51C24	0180-3603	7		CAPACITOR-FXD 10UF+-20% 100VDC AL	28480	0180-3603
A51C25	0160-4791	4	1	CAPACITOR-FXD 10PF +-5% 100VDC CER 0+-30	28480	0160-4791
A51C26	0160-6561	0		CAPACITOR-FXD .1UF +-20% 50VDC CER	16299	CAC02Z5U104M050A
A51C27	0180-3363	6		CAPACITOR-FXD 22UF+-20% 25VDC AL	28480	0180-3363
A51C28	0160-4801	7	3	CAPACITOR-FXD 100PF +-5% 100VDC CER	28480	0160-4801
A51C29	0160-4812	0	3	CAPACITOR-FXD 220PF +-5% 100VDC CER	28480	0160-4812
A51C30	0160-4801	7		CAPACITOR-FXD 100PF +-5% 100VDC CER	28480	0160-4801
A51C31	0160-4812	0		CAPACITOR-FXD 220PF +-5% 100VDC CER	28480	0160-4812
A51C32	0160-6561	0		CAPACITOR-FXD .1UF +-20% 50VDC CER	16299	CAC02Z5U104M050A
A51C33	0160-6561	0		CAPACITOR-FXD .1UF +-20% 50VDC CER	16299	CAC02Z5U104M050A
A51C34	0160-4801	7		CAPACITOR-FXD 100PF +-5% 100VDC CER	28480	0160-4801
A51C35	0160-4812	0		CAPACITOR-FXD 220PF +-5% 100VDC CER	28480	0160-4812
A51C36	0160-6561	0		CAPACITOR-FXD .1UF +-20% 50VDC CER	16299	CAC02Z5U104M050A
A51C37	0160-6561	0		CAPACITOR-FXD .1UF +-20% 50VDC CER	16299	CAC02Z5U104M050A
A51C38	0160-6561	0		CAPACITOR-FXD .1UF +-20% 50VDC CER	16299	CAC02Z5U104M050A
A51C39	0160-6561	0		CAPACITOR-FXD .1UF +-20% 50VDC CER	16299	CAC02Z5U104M050A
A51C40	0160-6561	0		CAPACITOR-FXD .1UF +-20% 50VDC CER	16299	CAC02Z5U104M050A
A51CR1	1901-0731	7	2	DIODE-PWR RECT 400V 1A	14433	1N4004G
A51CR2	1901-0731	7		DIODE-PWR RECT 400V 1A	14433	1N4004G
A51CR3	1901-0050	3	10	DIODE-SWITCHING 80V 200MA 2NS DO-35	9N171	1N4150
A51CR4	1901-0050	3		DIODE-SWITCHING 80V 200MA 2NS DO-35	9N171	1N4150
A51CR5	1902-0692	1	1	DIODE-ZNR 6.3V 1% DO-7 PD=.4W TC=+.001%	28480	1902-0692
A51CR6	1901-0050	3		DIODE-SWITCHING 80V 200MA 2NS DO-35	9N171	1N4150
A51CR7	1901-0050	3		DIODE-SWITCHING 80V 200MA 2NS DO-35	9N171	1N4150
A51CR8	1901-0050	3		DIODE-SWITCHING 80V 200MA 2NS DO-35	9N171	1N4150
A51CR9	1901-0050	3		DIODE-SWITCHING 80V 200MA 2NS DO-35	9N171	1N4150
A51CR10	1901-0050	3		DIODE-SWITCHING 80V 200MA 2NS DO-35	9N171	1N4150
A51CR11	1902-0957	1	2	DIODE-ZNR 9.1V 5% DO-35 PD=.4W TC=+.069%	28480	1902-0957
A51CR12	1902-0957	1		DIODE-ZNR 9.1V 5% DO-35 PD=.4W TC=+.069%	28480	1902-0957

*** Indicates factory selected value.**

Table 1. A51 Replaceable Parts (2 of 4)

Reference Designator	HP Part Number	C D	Qty.	Description	Mfr Code	Mfr Part Number
A51CR13	1902-0948	0	1	DIODE-ZNR 3.9V 5% DO-35 PD=.4W TC=-.012%	28480	1902-0948
A51CR14	1901-0050	3		DIODE-SWITCHING 80V 200MA 2NS DO-35	9N171	1N4150
A51CR15	1901-0050	3		DIODE-SWITCHING 80V 200MA 2NS DO-35	9N171	1N4150
A51CR16	1901-0050	3		DIODE-SWITCHING 80V 200MA 2NS DO-35	9N171	1N4150
A51J1	1251-5721	6	1	CONN-POST TYPE .100-PIN-SPCG 40-CONT	28480	1251-5721
A51J2	1250-0257	1	1	CONNECTOR-RF SMB M PC 50-OHM	28480	1250-0257
A51J3	1251-4938	5	7	CONNECTOR 3-PIN M METRIC POST TYPE	28480	1251-4938
A51J4	1251-4938	5		CONNECTOR 3-PIN M METRIC POST TYPE	28480	1251-4938
A51J5	1251-4938	5		CONNECTOR 3-PIN M METRIC POST TYPE	28480	1251-4938
A51J6-A51J30				NOT ASSIGNED		
A51J31	1251-4938	5		CONNECTOR 3-PIN M METRIC POST TYPE	28480	1251-4938
A51J32	1251-4938	5		CONNECTOR 3-PIN M METRIC POST TYPE	28480	1251-4938
A51J33	1251-6527	2	4	CONNECTOR 6-PIN M METRIC POST TYPE	28480	1251-6527
A51J34	1251-6527	2		CONNECTOR 6-PIN M METRIC POST TYPE	28480	1251-6527
A51J35-A51J39				NOT ASSIGNED		
A51J40	1251-4938	5		CONNECTOR 3-PIN M METRIC POST TYPE	28480	1251-4938
A51J41				NOT ASSIGNED		
A51J42				NOT ASSIGNED		
A51J43	1252-1304	5		CONN-POST TYPE 2.5-PIN-SPCG 8-CONT	28480	1252-1304
A51J44A	1251-7406	8	1	CONNECTOR 10-PIN M METRIC POST TYPE	28480	1251-7406
A51J44B	1252-1304	5	2	CONN-POST TYPE 2.5-PIN-SPCG 8-CONT	28480	1252-1304
A51J45	1251-6527	2		CONNECTOR 6-PIN M METRIC POST TYPE	28480	1251-6527
A51J46	1251-6527	2		CONNECTOR 6-PIN M METRIC POST TYPE	28480	1251-6527
A51J47	1251-5862	6	2	CONNECTOR 4-PIN M METRIC POST TYPE	28480	1251-5862
A51J48	1251-5862	6		CONNECTOR 4-PIN M METRIC POST TYPE	28480	1251-5862
A51J49-A51J59				NOT ASSIGNED		
A51J60	1251-4938	5		CONNECTOR 3-PIN M METRIC POST TYPE	28480	1251-4938
A51Q1	1854-0271	9	3	TRANSISTOR NPN SI TO-39 PD=1W FT=150MHZ	28480	1854-0271
A51Q2	1854-0271	9		TRANSISTOR NPN SI TO-39 PD=1W FT=150MHZ	28480	1854-0271
A51Q3	1853-0232	0	7	TRANSISTOR PNP SI TO-39 PD=1W FT=200MHZ	28480	1853-0232
A51Q4	1853-0232	0		TRANSISTOR PNP SI TO-39 PD=1W FT=200MHZ	28480	1853-0232
A51Q5	1853-0232	0		TRANSISTOR PNP SI TO-39 PD=1W FT=200MHZ	28480	1853-0232
A51Q6	1854-0271	9		TRANSISTOR NPN SI TO-39 PD=1W FT=150MHZ	28480	1854-0271
A51Q7	1854-0474	4	4	TRANSISTOR NPN SI PD=310MW FT=100MHZ	04713	2N5551
A51Q8	1853-0232	0		TRANSISTOR PNP SI TO-39 PD=1W FT=200MHZ	28480	1853-0232
A51Q9	1853-0232	0		TRANSISTOR PNP SI TO-39 PD=1W FT=200MHZ	28480	1853-0232
A51Q10	1853-0232	0		TRANSISTOR PNP SI TO-39 PD=1W FT=200MHZ	28480	1853-0232
A51Q11	1853-0232	0		TRANSISTOR PNP SI TO-39 PD=1W FT=200MHZ	28480	1853-0232
A51Q12	1854-0474	4		TRANSISTOR NPN SI PD=310MW FT=100MHZ	04713	2N5551
A51Q13	1854-0474	4		TRANSISTOR NPN SI PD=310MW FT=100MHZ	04713	2N5551
A51Q14	1854-0474	4		TRANSISTOR NPN SI PD=310MW FT=100MHZ	04713	2N5551
A51R1	1810-0557	2	1	NETWORK-RES 16-DIP 22.0 OHM X 8	28480	1810-0557
A51R2	0757-0280	3	13	RESISTOR 1K 1% .125W F TC=0+-100	24546	CT4-1/8-T0-1001-F
A51R3	0757-0401	0	9	RESISTOR 100 1% .125W F TC=0+-100	24546	CT4-1/8-T0-101-F
A51R4	0757-0401	0		RESISTOR 100 1% .125W F TC=0+-100	24546	CT4-1/8-T0-101-F
A51R5	0757-0401	0		RESISTOR 100 1% .125W F TC=0+-100	24546	CT4-1/8-T0-101-F

*** Indicates factory selected value.**

Table 1. A51 Replaceable Parts (3 of 4)

Reference Designator	HP Part Number	C D	Qty.	Description	Mfr Code	Mfr Part Number
A51R6	0757-0401	0		RESISTOR 100 1% .125W F TC=0+-100	24546	CT4-1/8-T0-101-F
A51R7	0757-0401	0		RESISTOR 100 1% .125W F TC=0+-100	24546	CT4-1/8-T0-101-F
A51R8	0757-0401	0		RESISTOR 100 1% .125W F TC=0+-100	24546	CT4-1/8-T0-101-F
A51R9	0757-0199	3	1	RESISTOR 21.5K 1% .125W F TC=0+-100	24546	CT4-1/8-T0-2152-F
A51R10	0757-0401	0		RESISTOR 100 1% .125W F TC=0+-100	24546	CT4-1/8-T0-101-F
A51R11	2100-0568	1	1	RESISTOR-TRMR 100 10% C TOP-ADJ 1-TRN	28480	2100-0568
A51R12	0757-0420	3	1	RESISTOR 750 1% .125W F TC=0+-100	24546	CT4-1/8-T0-751-F
A51R13	0698-6360	6	2	RESISTOR 10K .1% .125W F TC=0+-25	28480	0698-6360
A51R14	0698-6360	6		RESISTOR 10K .1% .125W F TC=0+-25	28480	0698-6360
A51R15	0757-0394	0	1	RESISTOR 51.1 1% .125W F TC=0+-100	24546	CT4-1/8-T0-51R1-F
A51R16	0698-0085	0	1	RESISTOR 2.61K 1% .125W F TC=0+-100	24546	CT4-1/8-T0-2611-F
A51R17	0757-0288	1	1	RESISTOR 9.09K 1% .125W F TC=0+-100	19701	5033R-1/8-T0-9091-F
A51R18	2100-0554	5	1	RESISTOR-TRMR 500 10% C TOP-ADJ 1-TRN	28480	2100-0554
A51R19	0757-0442	9	6	RESISTOR 10K 1% .125W F TC=0+-100	24546	CT4-1/8-T0-1002-F
A51R20	0757-0280	3		RESISTOR 1K 1% .125W F TC=0+-100	24546	CT4-1/8-T0-1001-F
A51R21	0757-0401	0		RESISTOR 100 1% .125W F TC=0+-100	24546	CT4-1/8-T0-101-F
A51R22	0757-0401	0		RESISTOR 100 1% .125W F TC=0+-100	24546	CT4-1/8-T0-101-F
A51R23	0757-0280	3		RESISTOR 1K 1% .125W F TC=0+-100	24546	CT4-1/8-T0-1001-F
A51R24	0757-0280	3		RESISTOR 1K 1% .125W F TC=0+-100	24546	CT4-1/8-T0-1001-F
A51R25	0698-0084	9	5	RESISTOR 2.15K 1% .125W F TC=0+-100	24546	CT4-1/8-T0-2151-F
A51R26	0757-0442	9		RESISTOR 10K 1% .125W F TC=0+-100	24546	CT4-1/8-T0-1002-F
A51R27	0698-0084	9		RESISTOR 2.15K 1% .125W F TC=0+-100	24546	CT4-1/8-T0-2151-F
A51R28	0757-0442	9		RESISTOR 10K 1% .125W F TC=0+-100	24546	CT4-1/8-T0-1002-F
A51R29	0698-6630	3	1	RESISTOR 20K .1% .125W F TC=0+-25	28480	0698-6630
A51R30	0757-0402	1	1	RESISTOR 110 1% .125W F TC=0+-100	24546	CT4-1/8-T0-111-F
A51R31	0757-0294	9	1	RESISTOR 17.8 1% .125W F TC=0+-100	19701	5033R-1/8-T0-17R8-F
A51R32	0698-6322	0	1	RESISTOR 4K .1% .125W F TC=0+-25	28480	0698-6322
A51R33	0698-3154	0	1	RESISTOR 4.22K 1% .125W F TC=0+-100	24546	CT4-1/8-T0-4221-F
A51R34	0757-0280	3		RESISTOR 1K 1% .125W F TC=0+-100	24546	CT4-1/8-T0-1001-F
A51R35	0698-3454	3	9	RESISTOR 215K 1% .125W F TC=0+-100	24546	CT4-1/8-T0-2153-F
A51R36	0757-0465	6	4	RESISTOR 100K 1% .125W F TC=0+-100	24546	CT4-1/8-T0-1003-F
A51R37	0698-3454	3		RESISTOR 215K 1% .125W F TC=0+-100	24546	CT4-1/8-T0-2153-F
A51R38	0757-0465	6		RESISTOR 100K 1% .125W F TC=0+-100	24546	CT4-1/8-T0-1003-F
A51R39	0698-3160	8	1	RESISTOR 31.6K 1% .125W F TC=0+-100	24546	CT4-1/8-T0-3162-F
A51R40	0757-0280	3		RESISTOR 1K 1% .125W F TC=0+-100	24546	CT4-1/8-T0-1001-F
A51R41	0757-0416	7	3	RESISTOR 511 1% .125W F TC=0+-100	24546	CT4-1/8-T0-511R-F
A51R42	0757-0416	7		RESISTOR 511 1% .125W F TC=0+-100	24546	CT4-1/8-T0-511R-F
A51R43	0757-0280	3		RESISTOR 1K 1% .125W F TC=0+-100	24546	CT4-1/8-T0-1001-F
A51R44	0757-0416	7		RESISTOR 511 1% .125W F TC=0+-100	24546	CT4-1/8-T0-511R-F
A51R45	0757-0280	3		RESISTOR 1K 1% .125W F TC=0+-100	24546	CT4-1/8-T0-1001-F
A51R46	0698-3136	8	2	RESISTOR 17.8K 1% .125W F TC=0+-100	24546	CT4-1/8-T0-1782-F
A51R47	0757-0441	8	1	RESISTOR 8.25K 1% .125W F TC=0+-100	24546	CT4-1/8-T0-8251-F
A51R48	0757-0346	2	1	RESISTOR 10 1% .125W F TC=0+-100	28480	0757-0346
A51R49	0698-3432	7	1	RESISTOR 26.1 1% .125W F TC=0+-100	03888	PME55-1/8-T0-26R1-F
A51R50	0698-3136	8		RESISTOR 17.8K 1% .125W F TC=0+-100	24546	CT4-1/8-T0-1782-F
A51R51	0698-3454	3		RESISTOR 215K 1% .125W F TC=0+-100	24546	CT4-1/8-T0-2153-F
A51R52	0757-0465	6		RESISTOR 100K 1% .125W F TC=0+-100	24546	CT4-1/8-T0-1003-F
A51R53	0698-3454	3		RESISTOR 215K 1% .125W F TC=0+-100	24546	CT4-1/8-T0-2153-F
A51R54	0757-0465	6		RESISTOR 100K 1% .125W F TC=0+-100	24546	CT4-1/8-T0-1003-F
A51R55	0757-0280	3		RESISTOR 1K 1% .125W F TC=0+-100	24546	CT4-1/8-T0-1001-F
A51R56	0757-0442	9		RESISTOR 10K 1% .125W F TC=0+-100	24546	CT4-1/8-T0-1002-F
A51R57	0698-0084	9		RESISTOR 2.15K 1% .125W F TC=0+-100	24546	CT4-1/8-T0-2151-F
A51R58	0757-0442	9		RESISTOR 10K 1% .125W F TC=0+-100	24546	CT4-1/8-T0-1002-F
A51R59	0698-0084	9		RESISTOR 2.15K 1% .125W F TC=0+-100	24546	CT4-1/8-T0-2151-F
A51R60	0698-3435	0	1	RESISTOR 38.3 1% .125W F TC=0+-100	28480	0698-3435

*** Indicates factory selected value.**

Table 1. A51 Replaceable Parts (4 of 4)

Reference Designator	HP Part Number	C D	Qty.	Description	Mfr Code	Mfr Part Number
A51R61	0698-0084	9		RESISTOR 2.15K 1% .125W F TC=0+-100	24546	CT4-1/8-T0-2151-F
A51R62	0757-0442	9		RESISTOR 10K 1% .125W F TC=0+-100	24546	CT4-1/8-T0-1002-F
A51R63	0757-0463	4	2	RESISTOR 82.5K 1% .125W F TC=0+-100	24546	CT4-1/8-T0-8252-F
A51R64	0757-0443	0	2	RESISTOR 11K 1% .125W F TC=0+-100	24546	CT4-1/8-T0-1102-F
A51R65	0698-3454	3		RESISTOR 215K 1% .125W F TC=0+-100	24546	CT4-1/8-T0-2153-F
A51R66	0698-3454	3		RESISTOR 215K 1% .125W F TC=0+-100	24546	CT4-1/8-T0-2153-F
A51R67	0757-0280	3		RESISTOR 1K 1% .125W F TC=0+-100	24546	CT4-1/8-T0-1001-F
A51R68	0757-0461	2	1	RESISTOR 68.1K 1% .125W F TC=0+-100	24546	CT4-1/8-T0-6812-F
A51R69	0757-0439	4	1	RESISTOR 6.81K 1% .125W F TC=0+-100	24546	CT4-1/8-T0-6811-F
A51R70	0698-3243	8	1	RESISTOR 178K 1% .125W F TC=0+-100	24546	CT4-1/8-T0-1783-F
A51R71	0698-3454	3		RESISTOR 215K 1% .125W F TC=0+-100	24546	CT4-1/8-T0-2153-F
A51R72	0757-0280	3		RESISTOR 1K 1% .125W F TC=0+-100	24546	CT4-1/8-T0-1001-F
A51R73	0698-3454	3		RESISTOR 215K 1% .125W F TC=0+-100	24546	CT4-1/8-T0-2153-F
A51R74	0698-3454	3		RESISTOR 215K 1% .125W F TC=0+-100	24546	CT4-1/8-T0-2153-F
A51R75	0757-0280	3		RESISTOR 1K 1% .125W F TC=0+-100	24546	CT4-1/8-T0-1001-F
A51R76	0757-0443	0		RESISTOR 11K 1% .125W F TC=0+-100	24546	CT4-1/8-T0-1102-F
A51R77	0757-0463	4		RESISTOR 82.5K 1% .125W F TC=0+-100	24546	CT4-1/8-T0-8252-F
A51R78	0757-0280	3		RESISTOR 1K 1% .125W F TC=0+-100	24546	CT4-1/8-T0-1001-F
A51U1	1820-2273	4	1	IC DRVR TTL PRPHL GP OCTL	13606	UDN-2981A
A51U2	1820-3344	2	5	IC SHF-RGTR CMOS/74HC ASYNCHRO SERIAL-IN	04713	MC74HC595N
A51U3	1826-0522	4	6	IC OP AMP LOW-BIAS-H-IMPD QUAD 14-DIP-P	01295	TL074CN
A51U4	1826-0476	7	1	IC SWITCH ANLG 8-DIP-P PKG	01295	TL601CP
A51U5	1826-0635	0	2	IC OP AMP LOW-OFS 8-DIP-P PKG	06665	OP-07CP
A51U6	1820-2922	0	1	IC GATE CMOS/74HC NAND QUAD 2-INP	04713	MC74HC00N
A51U7	1820-3344	2		IC SHF-RGTR CMOS/74HC ASYNCHRO SERIAL-IN	04713	MC74HC595N
A51U8	1826-0522	4		IC OP AMP LOW-BIAS-H-IMPD QUAD 14-DIP-P	01295	TL074CN
A51U9	1826-0635	0		IC OP AMP LOW-OFS 8-DIP-P PKG	06665	OP-07CP
A51U10	1826-1386	0	1	D/A 12-BIT 18-PLASTIC CMOS	24355	AD11/548
A51U11	1820-3344	2		IC SHF-RGTR CMOS/74HC ASYNCHRO SERIAL-IN	04713	MC74HC595N
A51U12	1826-0522	4		IC OP AMP LOW-BIAS-H-IMPD QUAD 14-DIP-P	01295	TL074CN
A51U13	1820-2635	2	1	IC GATE TTL ALS AND QUAD 2-INP	01295	SN74ALS08N
A51U14	1826-0522	4		IC OP AMP LOW-BIAS-H-IMPD QUAD 14-DIP-P	01295	TL074CN
A51U15	1820-3344	2		IC SHF-RGTR CMOS/74HC ASYNCHRO SERIAL-IN	04713	MC74HC595N
A51U16	1826-0522	4		IC OP AMP LOW-BIAS-H-IMPD QUAD 14-DIP-P	01295	TL074CN
A51U17	1826-0522	4		IC OP AMP LOW-BIAS-H-IMPD QUAD 14-DIP-P	01295	TL074CN
A51U18	1826-0707	7	1	D/A 8-BIT 16-PLASTIC CMOS	24355	AD7523JN
A51U19	1820-3344	2		IC SHF-RGTR CMOS/74HC ASYNCHRO SERIAL-IN	04713	MC74HC595N
A51W1	8159-0005	0	1	RESISTOR-ZERO OHMS 22 AWG LEAD DIA	28480	8159-0005

*** Indicates factory selected value.**

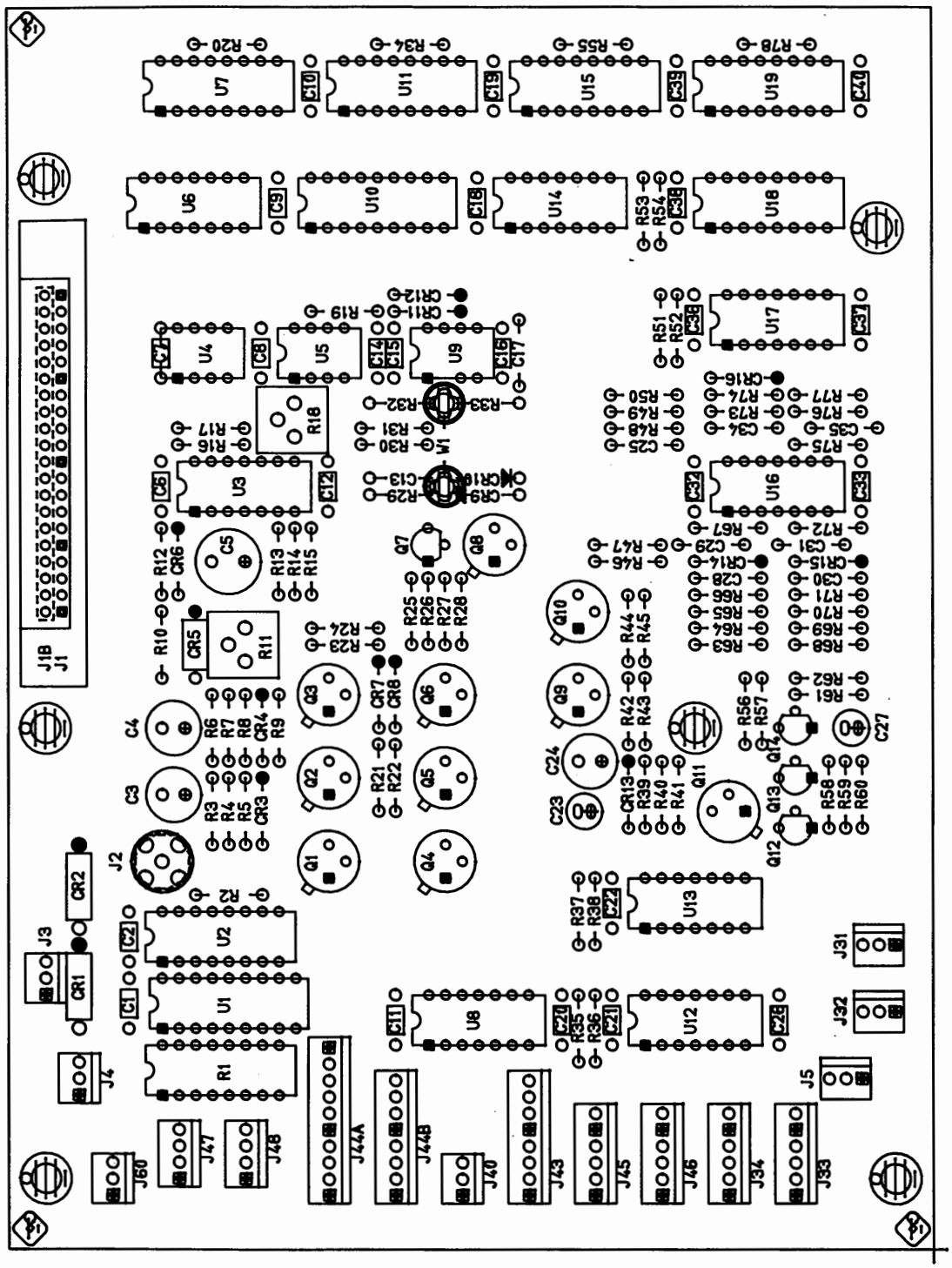

Figure 1. A51 Source Circuit Control Component Locations

A51 SOURCE CIRCUIT CONTROL

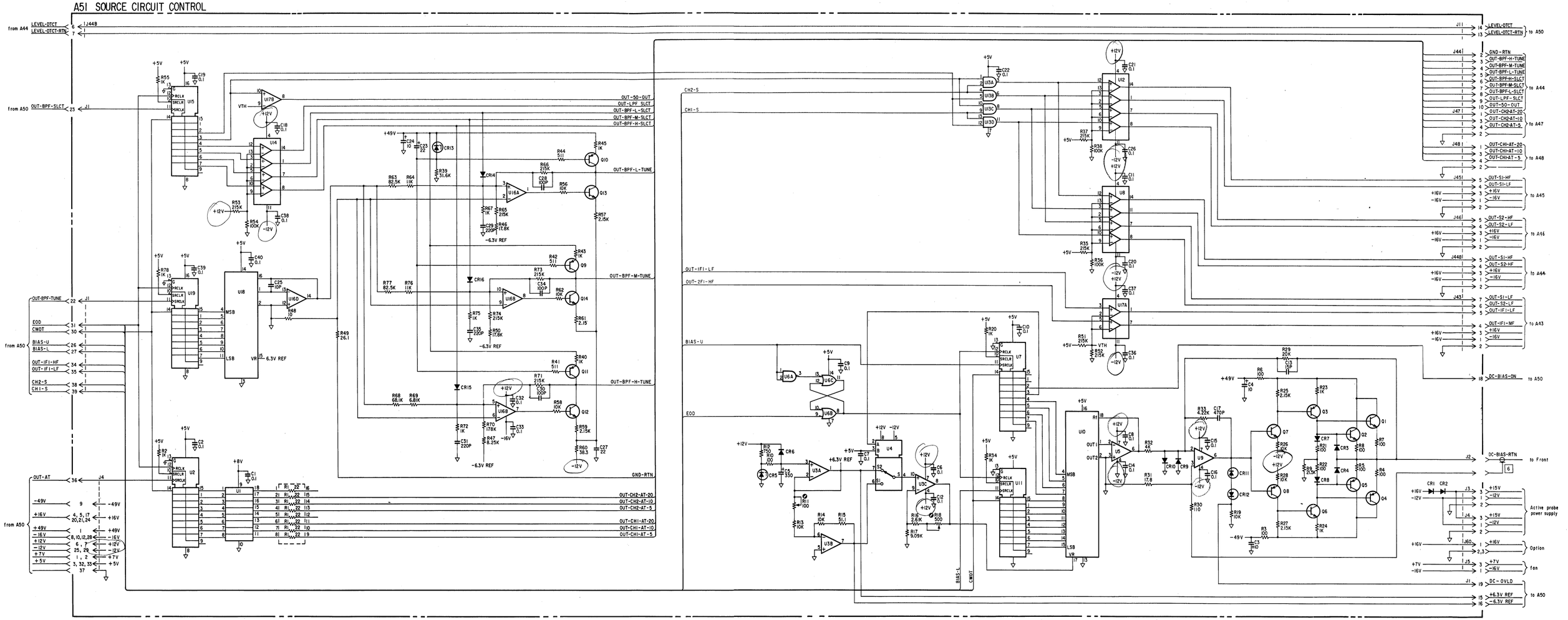

NOTES:

1. REFERENCE DESIGNATORS WITHIN THIS ASSEMBLY ARE ABBREVIATED. PREFIX ABBREVIATION WITH ASSEMBLY NUMBER FOR COMPLETE REFERENCE DESIGNATOR.

2. UNLESS OTHERWISE INDICATED:

   RESISTANCE IN OHMS (Ω)
   CAPACITANCE IN MICROFARADS (μF)
   INDUCTANCE IN MICROHENRIES (μH)

3. ADJUSTMENT NAMES

   A51R11
   A51R18

MEASUREMENT UNIT KEYBOARD SERVICE SHEET

The A52 Measurement Unit Keyboard assembly is installed on the front panel of the measurement unit (the lower chassis) and consists of LED indicators, indicator drivers, front panel key switches, and a key signal multiplexer (priority encoder).

CIRCUIT DESCRIPTION

INDICATORS:

All LED indicator signals come from the serial-to-parallel converter on the A50 board. When the LAMP-TEST signal is high (driven high by the front panel LED self test), all LED indicators will be lit. Normally (LAMP-TEST is low), only the LED indicators are lit whose control signals are driven high.

KEYBOARD:

When a key is pressed and held, the signal at U4 pin 18 goes high. Then the signal at U5D pin 8 goes high after a time delay (approximately 25 ms). On the positive going edge of the signal at U5D pin 8, U4 latches the occurrence of the key being pressed and outputs the encoded signal corresponding to that key. The following table lists pressed key versus output lines.

Key Label	U4 Input Pin	Priority	U4 Output Pins 15	16	17
OFF/ABORT	9	Highest	L	L	L
DC LEVEL	8		L	L	H
CH 1 AMPLITUDE	7		L	H	L
CH 1 REF ATTEN	6		L	H	H
CH 1 TEST ATTEN	5		H	L	L
CH 2 AMPLITUDE	4		H	L	H
CH 2 REF ATTEN	3		H	H	L
CH 2 TEST ATTEN	2	Lowest	H	H	H

NOTE

Input signals have priority. If two or more keys are pressed simultaneously, only the highest priority key depression is processed. For example, the **CH 1 AMPLITUDE** key and the **CH 1 TEST ATTEN** key are pressed simultaneously, U4 outputs only the encoded signal for the **CH 1 AMPLITUDE** key.

On the positive going edge of the signal at U5D pin 8 (U4 simultaneously latches its outputs), U3's output goes low. If the HP 4195A is under HP-IB control, in REMOTE, the LCL/RMT signal is held low and U3's output is constantly high.

The output signals from this board are buffered on the A50 board and then go to the A8 board.

Table 1. A52 Replaceable Parts

Reference Designator	HP Part Number	C D	Qty.	Description	Mfr Code	Mfr Part Number
A52				MEASUREMENT UNIT KEY BOARD		
A52	04195-66552	3	1	MEASUR KEY CONT	28480	04195-66552
A52C1-A52C4	0180-1085	5	4	CAPACITOR-FXD 4.7UF 16VDC TA	28480	0180-1085
A52DS1	1990-0517	4	2	LED-LAMP LUM-INT=3MCD IF=20MA-MAX BVR=5V	28480	5082-4655
A52DS2	1990-0517	4		LED-LAMP LUM-INT=3MCD IF=20MA-MAX BVR=5V	28480	5082-4655
A52DS3-A52DS8	1990-0487	7	6	LED-LAMP LUM-INT=2MCD BVR=5V	28480	HLMP-1401
A52J1	1200-0541	1	1	SOCKET-IC 24-CONT DIP DIP-SLDR	28480	1200-0541
A52MP1	5041-0309	5	1	KEY CAP QTR PUTTY	28480	5041-0309
A52MP2	5041-0267	4	1	KEY CAP QTR PEARL	28480	5041-0267
A52MP3-A52MP8	5041-0277	6	6	KEY CAP HALF PEARL	28480	5041-0277
A52R1-A52R8	0757-0442	9	8	RESISTOR 10K 1% .125W F TC=0+-100	24546	CT4-1/8-T0-1002-F
A52R9	0698-0083	8	1	RESISTOR 1.96K 1% .125W F TC=0+-100	24546	CT4-1/8-T0-1961-F
A52R10	0698-0082	7	2	RESISTOR 464 1% .125W F TC=0+-100	24546	CT4-1/8-T0-4640-F
A52R11	0698-0082	7		RESISTOR 464 1% .125W F TC=0+-100	24546	CT4-1/8-T0-4640-F
A52R12-A52R17	0698-3444	1	6	RESISTOR 316 1% .125W F TC=0+-100	24546	CT4-1/8-T0-316R-F
A52S1-A52S8	5060-9436	7	8	PUSHBUTTON SWITCH P.C. MOUNT	28480	5060-9436
A52U1	1820-2739	7	2	IC GATE TTL ALS NOR QUAD 2-INP	01295	SN74ALS02N
A52U2	1820-2739	7		IC GATE TTL ALS NOR QUAD 2-INP	01295	SN74ALS02N
A52U3	1820-2656	7	1	IC GATE TTL ALS NAND QUAD 2-INP	01295	SN74ALS00AN
A52U4	04195-80010	8	1	PAL	28480	04195-80010
A52U5	1820-1416	5	1	IC SCHMITT-TRIG TTL LS INV HEX 1-INP	01295	SN74LS14N
	04195-61651		1	FLAT CABLE ASSEMBLY (Not Included in A52)	28480	04195-61651

*** Indicates factory selected value.**

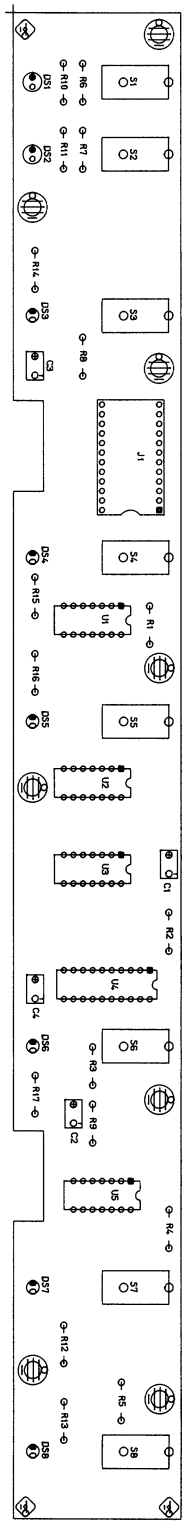

Figure 1. A52 Measurement Unit Keyboard Component Locations

A52 MEASUREMENT UNIT KEYBOARD

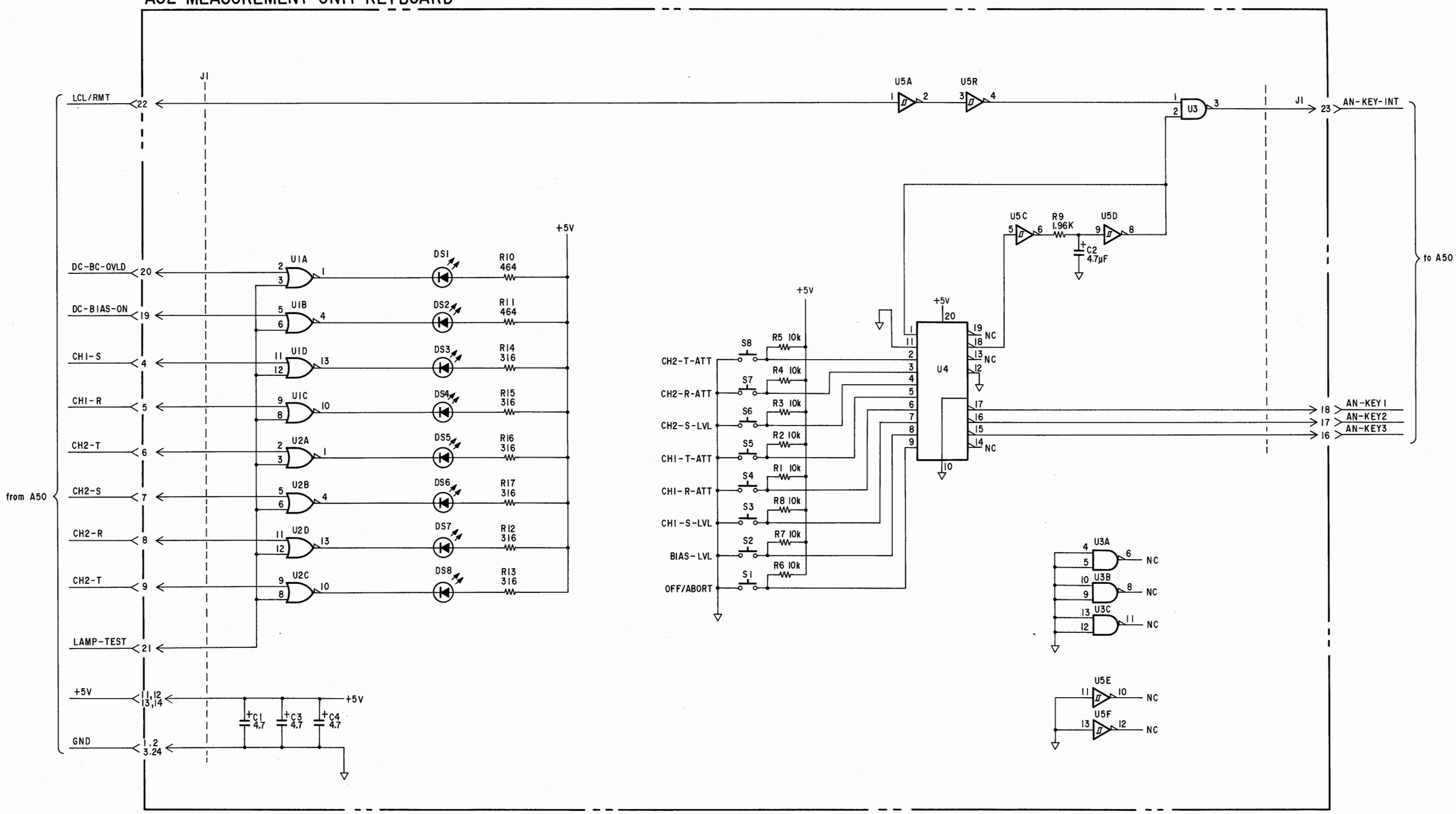

HIGH STABILITY OSCILLATOR SERVICE SHEET (OPTION 001 ONLY)

The A60 High Stability Oscillator board is installed only on option 001 HP 4195As. This assembly provides a stabilized 10 MHz signal, and its output signal (from the **OVEN REFERENCE** connector on the measurement unit rear panel) should be connected to **EXT REFERENCE** connector on the control unit rear panel to lock the VCXO frequency on the A10 board.

CIRCUIT DESCRIPTION

This assembly consists of a 10 MHz ovenized oscillator and the dc power supply regulator for the oscillator unit.

Table 1. A60 Replaceable Parts

Reference Designator	HP Part Number	C D	Qty.	Description	Mfr Code	Mfr Part Number
A60				HIGH STABILITY OSCILLATOR		
A60	04195-66560	3	1	HISTB OSC BD ASY	28480	04195-66560
A60C1	0160-4832	4	2	CAPACITOR-FXD .01UF +-10% 100VDC CER	28480	0160-4832
A60C2	0180-3470	6	1	CAPACITOR-FXD 220UF+-20% 25VDC AL	28480	0180-3470
A60C3	0160-4832	4		CAPACITOR-FXD .01UF +-10% 100VDC CER	28480	0160-4832
A60C4	0160-4791	4	1	CAPACITOR-FXD 10PF +-5% 100VDC CER 0+-30	28480	0160-4791
A60C5	0180-3363	6	2	CAPACITOR-FXD 22UF+-20% 25VDC AL	28480	0180-3363
A60C6	0180-3363	6		CAPACITOR-FXD 22UF+-20% 25VDC AL	28480	0180-3363
A60CR1	1901-0050	3	2	DIODE-SWITCHING 80V 200MA 2NS DO-35	9N171	1N4150
A60CR2	1901-0050	3		DIODE-SWITCHING 80V 200MA 2NS DO-35	9N171	1N4150
A60CR3	1902-0953	7	1	DIODE-ZNR 6.2V 5% DO-35 PD=.4W TC=+.053%	28480	1902-0953
A60E1	0960-0465	7	1	OSCILLATOR 10MHZ	28480	0960-0465
A60J1				NOT ASSIGNED		
A60J2	1250-0257	1	1	CONNECTOR-RF SMB M PC 50-OHM	28480	1250-0257
A60L1	9100-1619	2	1	INDUCTOR RF-CH-MLD 6.8UH 10%	28480	9100-1619
A60Q1	1854-0810	2	1	TRANSISTOR NPN SI PD=625MW FT=200MHZ	28480	1854-0810
A60Q2	1853-0084	0	1	TRANSISTOR PNP 2N4918 SI PD=30W FT=3MHZ	04713	2N4918
A60R1	2100-3252	6	1	RESISTOR-TRMR 5K 10% C TOP-ADJ 1-TRN	28480	2100-3252
A60R2	2100-3211	7	1	RESISTOR-TRMR 1K 10% C TOP-ADJ 1-TRN	28480	2100-3211
A60R3	0757-0290	5	1	RESISTOR 6.19K 1% .125W F TC=0+-100	19701	5033R-1/8-T0-6191-F
A60R4	0757-0280	3	3	RESISTOR 1K 1% .125W F TC=0+-100	24546	CT4-1/8-T0-1001-F
A60R5	0757-0442	9	3	RESISTOR 10K 1% .125W F TC=0+-100	24546	CT4-1/8-T0-1002-F
A60R6	0757-0279	0	1	RESISTOR 3.16K 1% .125W F TC=0+-100	24546	CT4-1/8-T0-3161-F
A60R7	0757-0288	1	1	RESISTOR 9.09K 1% .125W F TC=0+-100	19701	5033R-1/8-T0-9091-F
A60R8	0757-0401	0	1	RESISTOR 100 1% .125W F TC=0+-100	24546	CT4-1/8-T0-101-F
A60R9	0757-0442	9		RESISTOR 10K 1% .125W F TC=0+-100	24546	CT4-1/8-T0-1002-F
A60R10	0698-0084	9	1	RESISTOR 2.15K 1% .125W F TC=0+-100	24546	CT4-1/8-T0-2151-F
A60R11	0757-0280	3		RESISTOR 1K 1% .125W F TC=0+-100	24546	CT4-1/8-T0-1001-F
A60R12	0757-0442	9		RESISTOR 10K 1% .125W F TC=0+-100	24546	CT4-1/8-T0-1002-F
A60R13	0698-3430	5	1	RESISTOR 21.5 1% .125W F TC=0+-100	03888	PME55-1/8-T0-21R5-F
A60R14	0757-0465	6	1	RESISTOR 100K 1% .125W F TC=0+-100	24546	CT4-1/8-T0-1003-F
A60R15	0757-0280	3		RESISTOR 1K 1% .125W F TC=0+-100	24546	CT4-1/8-T0-1001-F
A60U1	1826-0519	9	1	IC OP AMP LOW-BIAS-H-IMPD 8-DIP-P PKG	01295	TL071CP
A60W1	04195-61680	8	1	WIRE ASSEMBLY 3PIN	28480	04195-61680

*** Indicates factory selected value.**

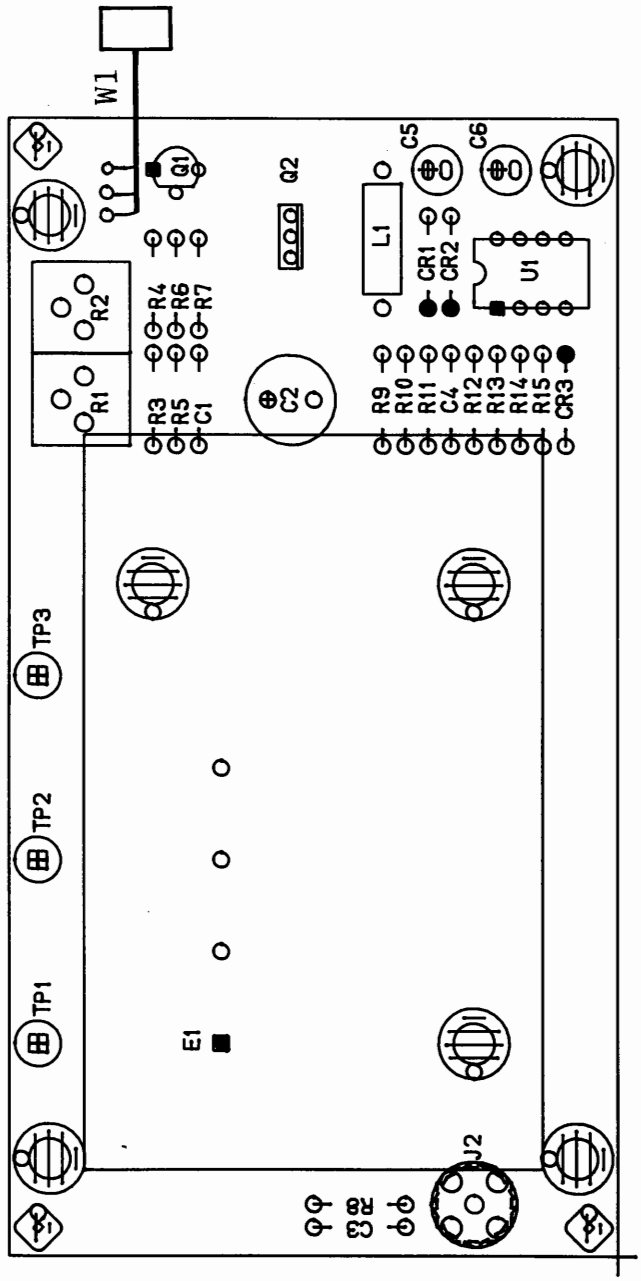

Figure 1. A60 High Stability Oscillator Component Locations

A60 HIGH STABILITY OSCILLATOR

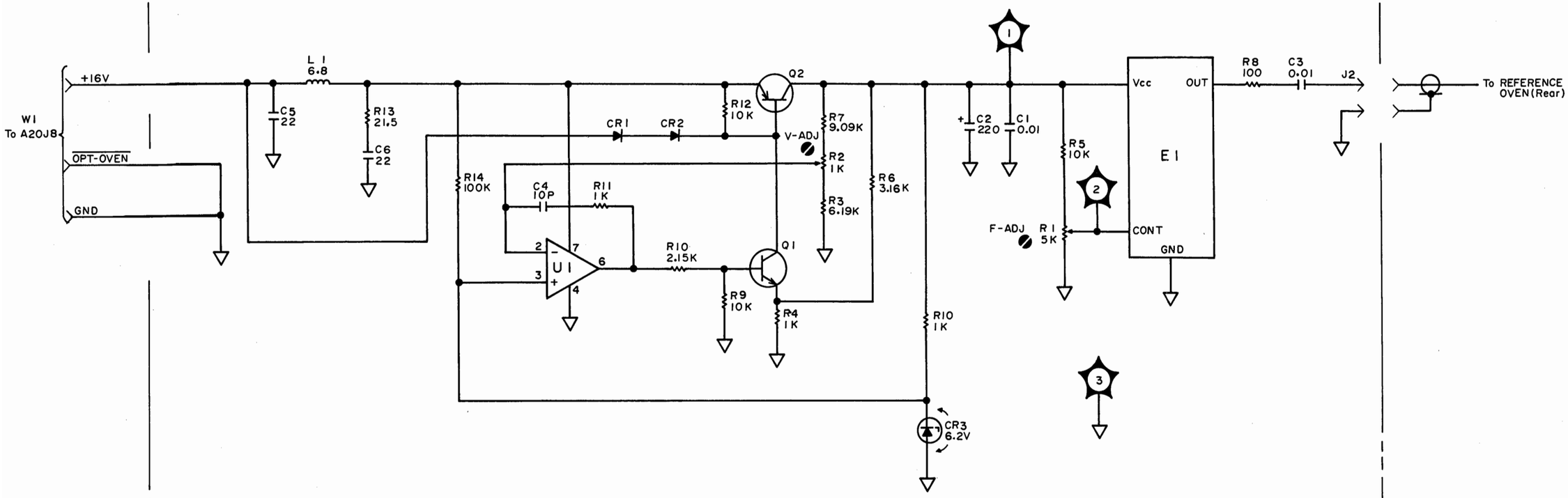

NOTES:

1. REFERENCE DESIGNATORS WITHIN THIS ASSEMBLY ARE ABBREVIATED. PREFIX ABBREVIATION WITH ASSEMBLY NUMBER FOR COMPLETE REFERENCE DESIGNATOR.

2. UNLESS OTHERWISE INDICATED:

   RESISTANCE IN OHMS (Ω)
   CAPACITANCE IN MICROFARADS (μF)
   INDUCTANCE IN MICROHENRIES (μH)

NOTES:

1. REFERENCE DESIGNATORS WITHIN THIS ASSEMBLY ARE ABBREVIATED. PREFIX ABBREVIATION WITH ASSEMBLY NUMBER FOR COMPLETE REFERENCE DESIGNATOR.

2. UNLESS OTHERWISE INDICATED:

   RESISTANCE IN OHMS (Ω)
   CAPACITANCE IN MICROFARADS (μF)
   INDUCTANCE IN MICROHENRIES (μH)

3. ADJUSTMENT NAMES

A60R1	F-ADJ
A60R2	V-ADJ

GENERAL PARTS LISTING

GENERAL PARTS LISTING

INTRODUCTION

The replaceable parts list break down for each major assembly are listed after the circuit description for each assembly service sheet. This section contains information for ordering the replacement parts not listed in the service sheets. Table 1, Reference Designation and Abbreviations, includes a list of reference designations and a list of abbreviations used in the parts list. Table 2, Manufacturers Code List, lists the names and address that correspond to the manufacturer's codes in the parts list.

REPLACEABLE PARTS LIST

Replaceable parts tables can be found in each assembly service sheet and list the following information for each part in that assembly.

1. The Hewlett-Packard part number.
2. The part number check digit (CD).
3. The total quantity (Qty) in the assembly. This quantity is given only once, at the first appearance of the part in the list.
4. The description of the part.
5. A five-digit code indicating a typical manufacturer of the part.
6. The manufacturer's part number.

REBUILT-EXCHANGE ASSEMBLIES

Under the rebuilt-exchange assembly program, certain factory-repaired and tested assemblies are available on a trade-in basis. These assemblies are offered at a lower cost than a new assembly while meeting all of the factory specifications required of a new assembly.

The defective assembly must be returned for credit under the terms of the rebuilt-exchange assembly program. Any spare assembly stock should be ordered using the new assembly part number.

SPARE PARTS KIT

Stocking spare parts for an instrument is often done to insure quick return to service after a malfunction occurs. Hewlett-Packard has a Spare Parts Kit available for this purpose. The kit consists of selected replaceable assemblies and components to support this instrument for one year. The contents of the kit and the Recommended Spare List are based on analysis of Failure Reports and Repair Data. A complimentary Recommended Spares List for this instrument may be obtained on request, and the Spare Parts Kit may be ordered through your nearest Hewlett-Packard office.

ORDERING INFORMATION

To order a part listed in the replaceable parts table, quote the Hewlett-Packard part number (with a check digit), indicate the quantity required, and address the order to the nearest Hewlett-Packard office. The check digit will ensure accurate and timely processing of the order.

To order a part that not listed in the replaceable parts table, include the instrument model number, instrument serial number, the description and function of the part, and the quantity of parts required. Address to order to the nearest Hewlett-Packard office.

DIRECT MAIL ORDER SYSTEM

Within the USA, Hewlett-Packard can supply parts through a direct mail order system. Advantages of using this system are:

a. Direct ordering and shipment from the Hewlett-Packard Parts Center in Mountain View, California.

b. No maximum or minimum on any mail order (there is a minimum order amount for parts ordered through a local Hewlett-Packard office when the orders require billing and invoicing).

c. Prepaid transportation (there is a small handling charge for each order).

d. No invoices.

To provide these advantages, a check or money order must accompany each order.

Mail order forms and specific ordering information are available through your local Hewlett-Packard office, addresses and phone numbers are located at the back of this manual.

Table 1. Reference Designation and Abbreviations

REFERENCE DESIGNATORS

A	= assembly
B	= motor
BT	= battery
C	= capacitor
CP	= coupler
CR	= diode
DL	= delay line
DS	= device signaling (lamp)
E	= misc electronic part
F	= fuse
FL	= filter
J	= jack
K	= relay
L	= inductor
M	= meter
MP	= mechanical part
P	= plug
Q	= transistor
R	= resistor
RT	= thermistor
S	= switch
T	= transformer
TB	= terminal board
TP	= test point
U	= integrated circuit
V	= vacuum, tube, neon bulb, photocell, etc.
VR	= voltage regulator
W	= cable
X	= socket
Y	= crystal

ABBREVIATIONS

A	= amperes
A. F. C.	= automatic frequency control
AMPL	= amplifier
B. F. O.	= beat frequency oscillator
BE CU	= beryllium copper
BH	= binder head
BP	= bandpass
BRS	= brass
BWO	= backward wave oscillator
CCW	= counter-clockwise
CER	= ceramic
CMO	= cabinet mount only
COEF	= coefficient
COM	= common
COMP	= composition
COMPL	= complete
CONN	= connector
CP	= cadmium plate
CRT	= cathode-ray tube
CW	= clockwise
DEPC	= deposited carbon
DR	= drive
ELECT	= electrolytic
ENCAP	= encapsulated
EXT	= external
F	= farads
f	= femto = 10^{-15}
FH	= flat head
FIL H	= fillister head
FXD	= fixed
G	= giga = 10^{9}
GE	= germanium
GL	= glass
GRD	= ground(ed)
H	= henries
HEX	= hexagonal
HG	= mercury
HR	= hour(s)
Hz	= hertz
IF	= intermediate freq.
IMPG	= impregnated
INCD	= incandescent
INCL	= include(s)
INS	= insulation(ed)
INT	= internal
k	= kilo = 1000
LH	= left hand
LIN	= linear taper
LK WASH	= lock washer
LOG	= logarithmic taper
LPF	= low pass filter
m	= milli = 10^{-3}
M	= meg = 10^{6}
MET FLM	= metal film
MET OX	= metallic oxide
MFR	= manufacturer
MINAT	= miniature
MOM	= momentary
MTG	= mounting
MY	= "mylar"
n	= nano = 10^{-9}
N/C	= normally closed
NE	= neon
NI PL	= nickel plate
N/O	= normally open
NPO	= negative positive zero (zero temperature coefficient)
NPN	= negative-positive-negative
NRFR	= not recommended for field replacement
NSR	= not separately replaceable
OBD	= order by description
OH	= oval head
OX	= oxide
P	= peak
PC	= printed circuit
p	= pico = 10^{-12}
PH BRZ	= phosphor bronze
PHL	= Phillips
PIV	= peak inverse voltage
PNP	= positive-negative-positive
P/O	= part of
POLY	= polystyrene
PORC	= porcelain
POS	= position(s)
POT	= potentiometer
PP	= peak-to-peak
PT	= point
PWV	= peak working voltage
RECT	= rectifier
RF	= radio frequency
RH	= round head or right hand
RMO	= rack mount only
RMS	= root-mean square
RWV	= reverse working voltage
S-B	= slow-blow
SCR	= screw
SE	= selenium
SECT	= section(s)
SEMICON	= semiconductor
SI	= silicon
SIL	= silver
SL	= slide
SPG	= spring
SPL	= special
SST	= stainless steel
SR	= split ring
STL	= steel
TA	= tantalum
TD	= time delay
TGL	= toggle
THD	= thread
TI	= titanium
TOL	= tolerance
TRIM	= trimmer
TWT	= traveling wave tube
μ	= micro = 10^{-6}
VAR	= variable
VDCW	= dc working volts
W/	= with
W	= watts
WIV	= working inverse voltage
WW	= wirewound
W/O	= without

0001-9700

Table 2. Manufacturers Code List

Mfr. No. Code	Manufacturer Name	Address	Zip
C0633	RIFA	BROMMA, SE	
S0167	FUJITSU MICROELECTRONICS INC	SANTA CLARA, CA, US	95054
S0545	NEC ELECTRONICS LTD	MTN VIEW, CA, US	94043
S4013	HITACHI AMERICA LTD	SUNNYVALE, CA, US	94086
S4218	TOKO INC	TOKYO, JP	
01121	ALLEN-BRADLEY CO INC	EL PASO, TX, US	79935
01295	TEXAS INSTRUMENTS INC	DALLAS, TX, US	75265
02114	FERROXCUBE CORP	SAUGERTIES, NY, US	12477
03888	K D I PYROFILM CORP	WHIPPANY, NJ	07981
04713	MOTOROLA INC SEMI-COND PROD	PHOENIX, AZ, US	85008
05880	UNIVERSAL CASTINGS CORP	CHICAGO, IL	60638
06383	PANDUIT CORP	TINLEY PARK, IL, US	60477
06394	HOOVER UNIVERSAL INC BALL & RLR DIV	SALINE, MI	68310
06665	PRECISION MONOLITHICS INC.	SANTA CLARA, CA	95050
07263	FAIRCHILD CORP	MOUNTAIN VIEW, CA, US	94042
07953	SALTER GEORGE A	EAGLEVILLE, PA	19408
08452	WESTINGHOUSE ELEC CORP WELD EQPT	SYKESVILLE, MD	21784
08806	GE CO MINIATURE LAMP PROD DEPT	CLEVELAND, OH	44112
09761	BUNDY TUBING CO	WARREN, MI	48090
09814	NATIONAL BUREAU OF STANDARDS	WASHINGTON, DC	20234
09823	BURGESS INC	FREEPORT, IL	61032
09922	BURNDY CORP	NORWALK, CT, US	06856
1B546	VARO SEMICONDUCTOR INC	GARLAND, TX, US	75046
10380	CAMBRIDGE WIRE CLOTH CO THE	CAMBRIDGE, MA	21613
11236	CTS CORP BERNE DIV	BERNE, IN, US	46711
11710	CHATILLON JOHN & SONS INC	KEW GARDENS, NY	11415
13606	SPRAGUE ELECTRIC SEMICON DIV	CONCORD, NH	03301
14433	ITT SEMICONDUCTORS DIV	TUSTIN, CA, US	92680
14936	GENERAL INSTRUMENT CORP (DIODE)	HICKSVILLE, NY, US	11802
15542	MINI-CIRCUITS LAB DIV SCTFC CMPNT	BROOKLYN, NY	11229
16299	CORNING ELECTRONICS	RALEIGH, NC, US	27604
18324	SIGNETICS CORP	SUNNYVALE, CA, US	94086
19701	MEPCO/CENTRALAB INC	WEST PALM BEACH, FL, US	33407
24355	ANALOG DEVICES INC	NORWOOD, MA, US	02062
24546	CORNING ELECTRONICS	SANTA CLARA, CA, US	95050
25403	NV PHILIPS ELCOMA DEPT	EINDHOVEN, HL	02876
26654	VARADYNE INC	SANTA MONICA, CA	90404
27014	NATIONAL SEMICONDUCTOR CORP	SANTA CLARA, CA, US	95052
27264	MOLEX PRODUCTS CO	LISLE, IL, US	60532
28480	HEWLETT-PACKARD CO CORPORATE HQ	PALO ALTO, CA	94304
34335	ADVANCED MICRO DEVICES INC	SUNNYVALE, CA, US	94086
34371	HARRIS CORP	MELBOURNE, FL, US	32901
34649	INTEL CORP	SANTA CLARA, CA, US	95054
52763	STETTNER ELECTRONICS INC	CHATTANOOGA, TN, US	37421
56289	SPRAGUE ELECTRIC CO	NORTH ADAMS, MA	01247
73899	J F D ELECTRONICS CORP	BROOKLYN, NY	11219
75042	TRW INC PHILADELPHIA DIV	PHILADELPHIA, PA	19108
75915	LITTELFUSE INC	DES PLAINES, IL, US	60016
9N171	UNITRODE CORP	LEXINGTON, MA, US	02173
91637	DALE ELECTRONICS INC	EL PASO, TX, US	79936

Table 3. Major Mechanical Parts (Exploded View) (Sheet 1 of 2)

Control Unit

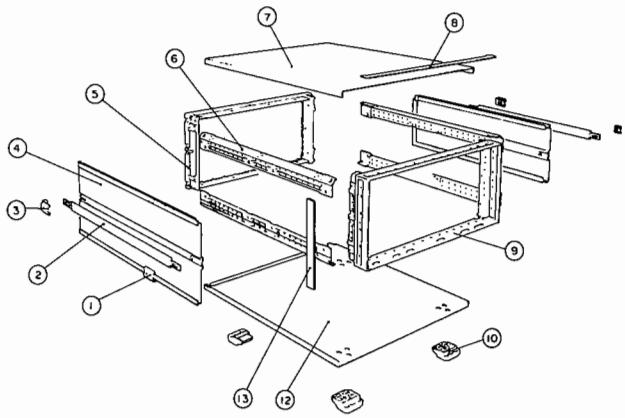

Cabinet Parts List

Ref. Desig.	Sytem II Part Number	Sytem II plus Part Number	Qty.	Description
1	5041-6819	5041-8819	2	Cap Front
2	5060-9805	5062-3705	2	Strap Handle
3	5041-6820	5041-8820	2	Cap Rear
4	5060-9948	5062-3848	2	Cover Side
5	5021-5808	5021-5808	1	Frame Rear
6	5021-5838	5021-5838	4	Strut Corner
7	5061-9436	5062-3736	1	Cover Top
8	5040-7202	5041-8802	1	Trim Top
9	5021-5807	5021-8407	1	Frame Front
10	5040-7201	5041-8801	4	Foot
12	5061-9448	5062-3748	1	Cover Bottom
13	5001-0441	5001-0541	2	Trim Side

NOTE

HP 4195A Serial Number Prefix ;

System II : 2738 and below
System II Plus : 2830 and above

Chassis Parts List

Part Number	Qty.	Description
04195-60001	1	Chassis
04195-00637	1	Top Plate

Table 3. Major Mechanical Parts (Exploded View) (Sheet 2 of 2)

Measurement Unit

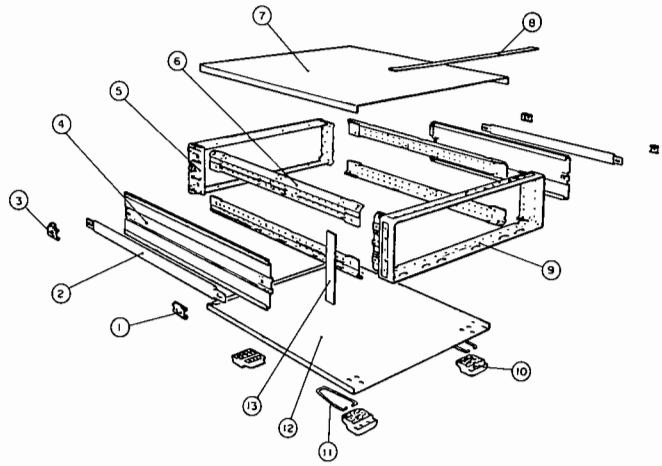

Cabinet Parts List

Ref. Desig.	Sytem II Part Number	Sytem II plus Part Number	Qty.	Description
1	5041-6819	5041-8819	2	Cap Front
2	5060-9805	5062-3705	2	Strap Handle
3	5041-6820	5041-8820	2	Cap Rear
4	5060-9938	5062-3838	2	Cover Side
5	5021-5804	5021-5808	1	Frame Rear
6	5021-5838	5021-5838	4	Strut Corner
7	5061-9436	5062-3736	1	Cover Top
	04195-87106	04195-87106	1	Label
8	5040-7202	5041-8802	1	Trim Top
9	5021-5803	5021-8403	1	Frame Front
10	5040-7201	5041-8801	4	Foot
11	1460-1345	1460-1345	2	Stand Tilt
12	5061-9448	5062-3748	1	Cover Bottom
	04195-87107	04195-87107	1	Label
13	5001-0439	5001-0539	2	Trim Side

Chassis Parts List

Part Number	Qty.	Description
04195-60151	1	Chassis Top
04195-00152	1	Chassis Bottom
04195-00153	2	Chassis Angle

Table 4. Control Unit Front Panel Components

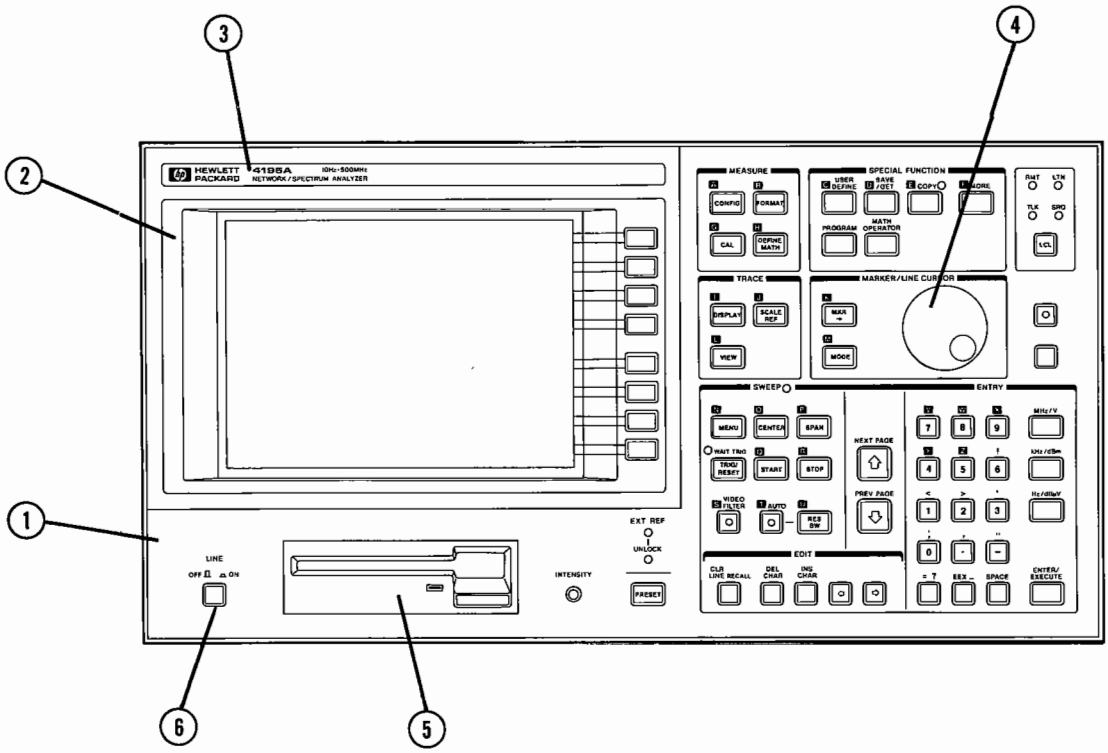

Reference Designator	Part Number	Qty.	Description
1	04195-00201	1	Panel Front
2	04195-40001	1	Bezel
	04195-00203	1	Panel, Sub Front
3	04195-87101	1	Label
4	0370-3033	1	Knob
5	0950-1752	1	Disc Drive
	04195-01201	1	Angle
	0515-0914	4	Screw Flat-Head
	0515-1550	4	Screw Pan-Head
6	5041-0564	1	Key Cap
	04194-40001	1	Rod
	04194-61635	1	Line Switch Assy

Table 5. Measurement Unit Front Panel Components

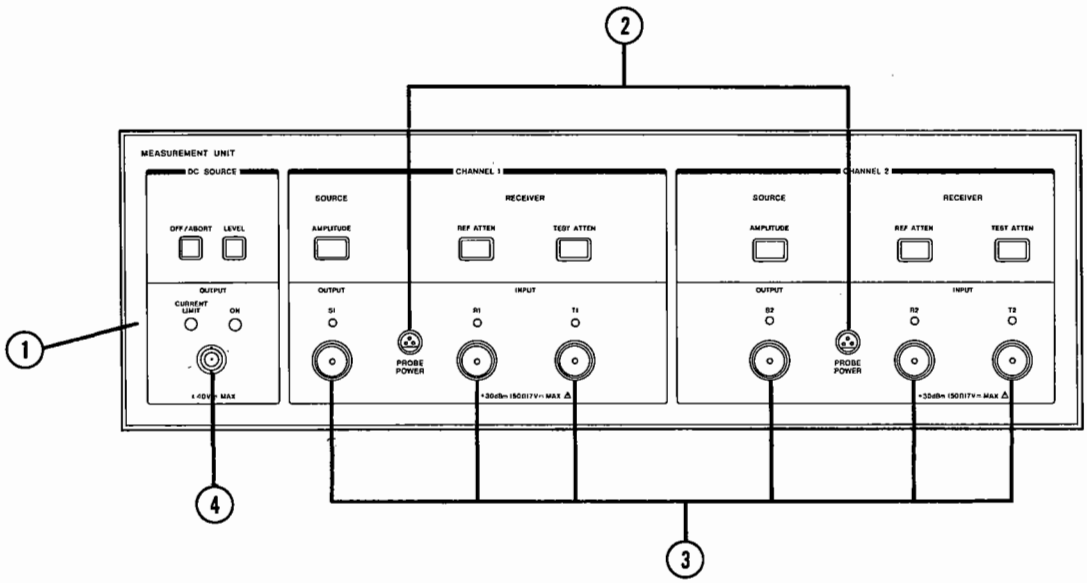

Reference Designator	Part Number	Qty.	Description
1	04195-00251	1	Panel Front
	04195-00253	1	Panel, Sub Front
2	5060-0467	2	Connector 3 pin Male
	2950-0001	2	Nut
	04195-61647	1	Cable Assembly (3 pin)
	2190-0016	2	Washer
3	1250-1811	6	Connector N-type (with Nut)
	2190-0054	6	Washer
4	1250-0102	1	Connector BNC
	2950-0035	1	Nut
	2190-0102	1	Washer

Table 6. Control Unit Rear Panel Components (Sheet 1 of 2)

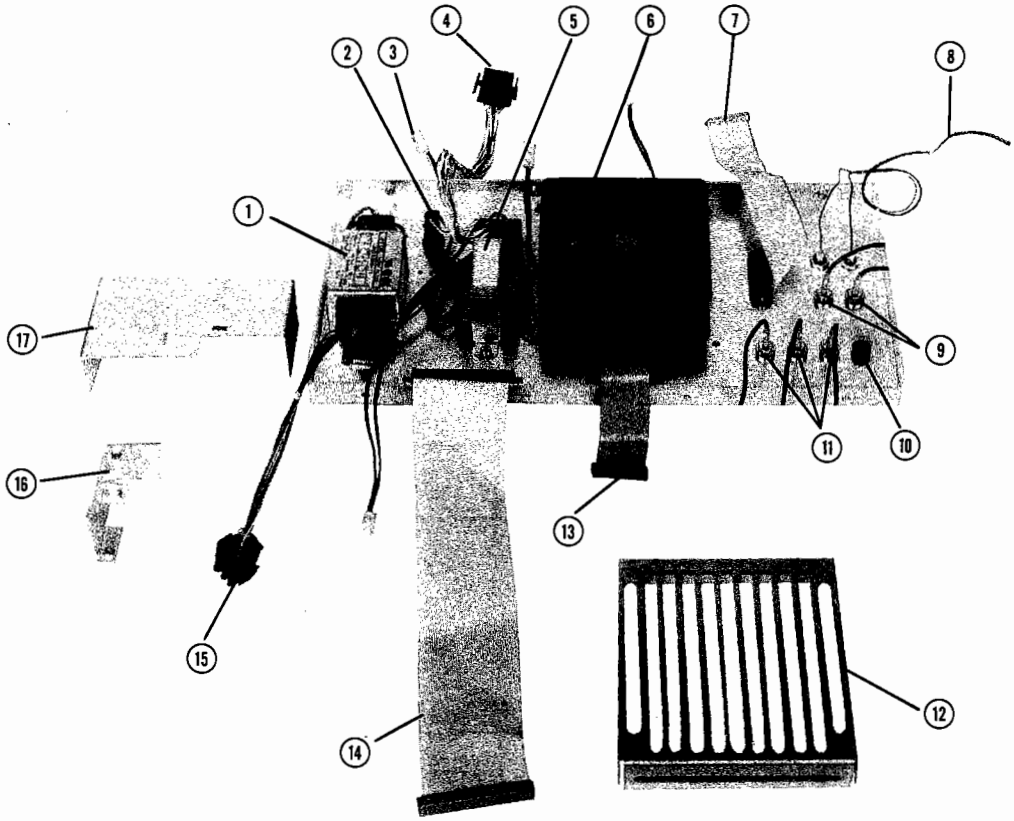

Reference Designator	Part Number	Qty.	Description
1	9135-0280	1	Line Filter
	0515-0910	4	Screw Pan-Head
	2190-0586	4	Washer
2	2110-0564	1	Holder Fuse
	2110-0010	1	Fuse
	2110-0565	1	Cap Holder
	2110-0569	1	Nut
3	04194-61634	1	Cable Assembly (2 pin)
4	04194-61616	1	Cable Assembly (12 pin)
5	04194-65006	1	Transformer Assembly
	0515-0910	1	Screw Pan-Head
	2190-0586	1	Washer Spring
6	3160-0541	1	Blower
	04194-61636	1	Cable Assembly (2 pin)
	0515-1509	4	Screw
	2190-0586	4	Washer

Table 6. Control Unit Rear Panel Components (Sheet 2 of 2)

Reference Designator	Part Number	Qty.	Description
7	04194-61610	1	Flat Cable Assembly (with Screw, Nut)
	2190-0577	1	Washer Spring
8	1250-0083	2	Connector BNC
	2950-0001	2	Nut
	2190-0016	2	Washer
	04195-61623	1	Cable Assembly (2 pin)
9	1250-0252	2	Connector BNC
	2950-0035	2	Nut
	2190-0102	2	Washer
10	6960-0041	1	Plug Hole
11	1250-0252	3	Connector BNC
	2950-0035	3	Nut
	2190-0102	3	Washer
12	04194-04001	1	Cover Blower
	0515-1550	4	Screw Pan-Head
13	04194-61612	1	Flat Cable Assembly (With Nut)
	1251-5436	1	Screw Lock Set
14	04194-61611	1	Flat Cable Assembly
	0515-1551	2	Screw Pan-Head
	0535-0031	2	Nut
15	04194-61615	1	Cable Assembly (9 pin)
	1251-5436	1	Screw Lock Set
16	04195-01205	1	Angle
	0515-1550	2	Screw Pan-head
17	04195-04002	1	Cover Line Filter
	1400-1048	1	Edge Saddle
	0400-0018	1	Grommet
	0515-1550	1	Screw Pan-head

Table 7. Measurement Unit Rear Panel Components

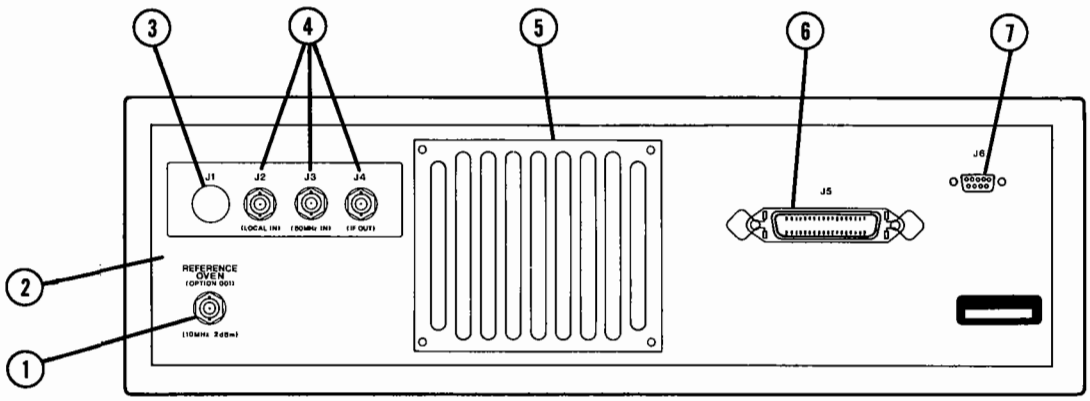

Reference Designator	Part Number	Qty.	Description
1	6960-0041	1	Plug Hole (for standard units)
	1250-0252	3	Connector BNC (for Option 001)
	2950-0035	3	Nut (for Option 001)
	2190-0102	3	Washer (for Option 001)
2	04195-00255	1	Panel Rear
3	6960-0041	1	Plug Hole
4	1250-0252	3	Connector BNC
	2950-0035	3	Nut
	2190-0102	3	Washer
5	04195-61646	1	Blower Assembly
	0515-1509	4	Screw
	2190-0586	4	Washer
	04195-04051	1	Cover Blower
	0515-1550	4	Screw Pan-Head
	2190-0586	4	Washer
6	1252-2023	1	Connector 50 pin (included in A50)
7	1252-2252	1	Connector 9 pin (included in A50)

Table 8. CRT Display Section Mechanical Components

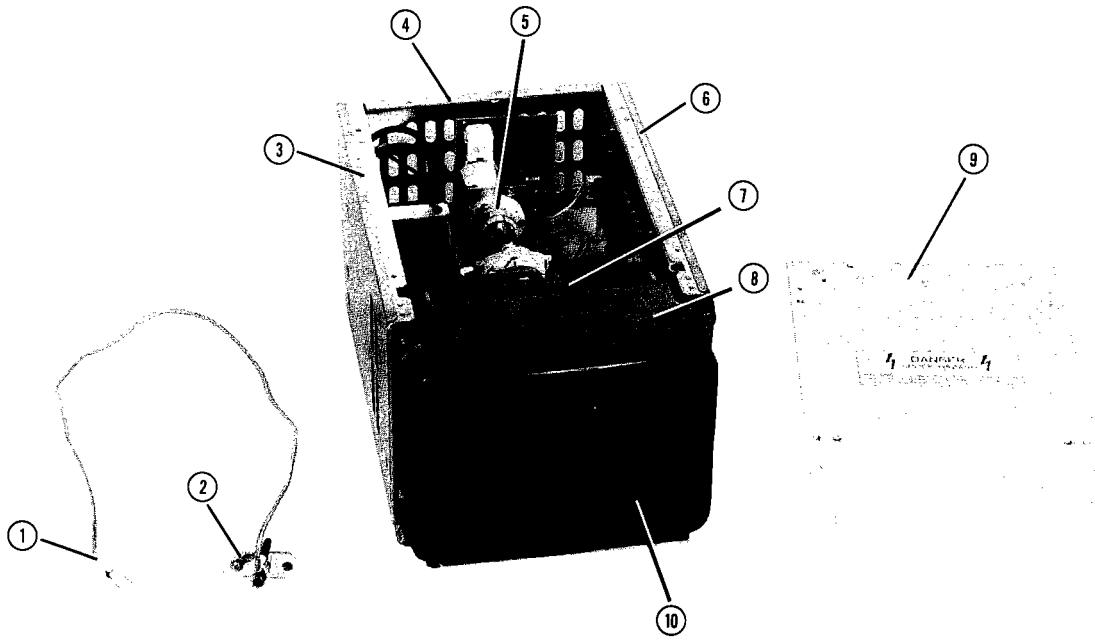

Reference Designator	Part Number	Qty.	Description
1	04195-61628	1	Cable Assembly (4 pin)
2	2100-4118	1	Resistor Trimmer 5 kΩ
	04195-00608	1	Plate
	2190-0084	1	Washer
	04145-24002	1	Nut
3	04195-00606	1	Plate Shield Permalloy
	04195-00107	1	Chassis Side
4	04195-00111	1	Chassis Rear
	0400-0163	2	Grommet
5	04195-00609	1	Bracket, Plate
	1400-1468	1	Clump
6	04195-00606	1	Plate Shield Permalloy
	04195-00108	1	Chassis Side
	04195-00112	1	Cover for A5 Board Assembly
	2190-0586	4	Washer
7	04194-61632	1	Coil Assembly
8	04195-00110	1	Chassis Front
9	04195-04001	1	Cover Top
10	04195-69106	1	CRT Assembly

Table 9. Control Unit Coaxial Cable Assembly

Marker	Part Number	Description	Connection
"A" "A"	04194-61604	BNC-SMB	**J4** (Rear) to A15J8
"B" "B"	04194-61605	BNC-SMB	**J3** (Rear) to A15J10
"C" "C"	04194-61606	BNC-SMB	**J2** (Rear) to A15J9
"D" "D"	04194-61607	BNC-SMB	**10MHz OUTPUT** (Rear) to A15J12
"E" "E"	04194-61609	BNC-SMB	**EXT REFERENCE** (Rear) to A15J11

Table 10. Measurement Unit Coaxial Cable Assembly (Sheet 1 of 2)

Marker	Part Number	Description	Connection
"B"	04195-61691	SMB-SMB 100 mm	A33J2 to A34J3
"B"	04195-61691	SMB-SMB 100 mm	A33J3 to A34J4
"B"	04195-61691	SMB-SMB 100 mm	A40J4 to A43J2
"B"	04195-61691	SMB-SMB 100 mm	A43J5 to A45J2
"B"	04195-61691	SMB-SMB 100 mm	A43J6 to A46J2
"C"	04195-61692	SMB-SMB 150 mm	A22J1 to A23J2
"C"	04195-61692	SMB-SMB 150 mm	A44J3 to A45J1
"C"	04195-61692	SMB-SMB 150 mm	A44J2 to A46J1
"D" "D"	04195-61693	SMB-SMB 200 mm	A130J2 to A32J1
"D" "D"	04195-61693	SMB-SMB 200 mm	A32J2 to A40J3
"E" "E"	04195-61694	SMB-SMB 250 mm	A20J4 to A22J4
"E" "E"	04195-61694	SMB-SMB 250 mm	A22J3 to A26J2
"E" "E"	04195-61694	SMB-SMB 250 mm	A130J1 to A31J1
"E" "E"	04195-61683	SMB-SMB 400 mm with core	A34J1 to A43J1
"F" "F"	04195-61695	SMB-SMB 300 mm	A40J2 to A43J3
"H" "H"	04195-61697	SMB-SMB 400 mm	A31J3 to A40J1
"I" "I"	04195-61698	SMB-SMB 450 mm	A43J4 to A44J1
"I" "I"	04195-61632	SMC-SMC 450 mm	A21J3 to A32J3
"N" "N"	04195-61693	SMB-SMB 700 mm	A130J3 to A40J7
"P" "T"	04195-61681	SMB-SMC 220 mm	A21J4 to A128J1
"R" "R"	04195-61686	SMB-SMB 350 mm	A20J5 to A21J1
"R1"	04195-61675	SMA-SMA Semi-Rigid	**R1** (front) to A29J1
"R2"	04195-61672	SMA-SMA Semi-Rigid	**R2** (front) to A27J1

Table 10. Measurement Unit Coaxial Cable Assembly (Sheet 2 of 2)

Marker	Part Number	Description	Connection
"S" "S"	04195-61631	SMC-SMC 350 mm	A20J3 to A31J2
"S1"	04195-61676	SMA-SMA Semi-Rigid	S1 FRONT to A48J2
"S2"	04195-61673	SMA-SMA Semi-Rigid	S2 FRONT to A47J2
"T1"	04195-61674	SMA-SMA Semi-Rigid	T1 FRONT to A30J1
"T2"	04195-61671	SMA-SMA Semi-Rigid	T2 FRONT to A28J1
"U"	04195-61690	SMB-SMC 120 mm	A22J5 to A128J2
"U"	04195-61690	SMB-SMC 120 mm	A23J1 to A24J1
"V"	04195-61682	SMC-SMC 120 mm	A45J3 to A47J1
"V"	04195-61682	SMC-SMC 120 mm	A46J3 to A48J1
"X"	04195-61687	SMC-SMC 150 mm	A24J3 to A25A3J2
"X"	04195-61687	SMC-SMC 150 mm	A24J4 to A25A2J2
"X"	04195-61687	SMC-SMC 150 mm	A24J5 to A25A1J2
"X" "155"	04195-61701	SMC-SMC 155 mm	May be used as "X"
"X" "145"	04195-61702	SMC-SMC 145 mm	cables for phase
"X" "140"	04195-61703	SMC-SMC 140 mm	tracking
"Y"	04195-61688	SMC-SMC 130 mm	A24J2 to A25A4J2
"Y"	04195-61688	SMC-SMC 130 mm	A25A1J1 to A29J2
"Y"	04195-61688	SMC-SMC 130 mm	A25A2J1 to A30J2
"Y"	04195-61688	SMC-SMC 130 mm	A25A3J1 to A28J2
"Y"	04195-61688	SMC-SMC 130 mm	A25A4J1 to A27J2
"Y" "135"	04195-61704	SMC-SMC 135 mm	May be used for connecting A24J2 to A25A4J2
"Z"	04195-61689	SMC-SMC 160 mm	A26J1 to A27J3
"Z"	04195-61689	SMC-SMC 160 mm	A26J3 to A28J3
"Z"	04195-61689	SMC-SMC 160 mm	A26J4 to A30J3
"Z"	04195-61689	SMC-SMC 160 mm	A26J5 to A29J3
"2"	04195-61643	BNC-SMB 150 mm	A33J1 to **J2** (rear)
"3"	04195-61642	BNC-SMB 400 mm	A130J4 to **J3** (rear)
"4"	04195-61641	BNC-SMB 200 mm	A20J1 to **J4** (rear)
"5"	04195-61645	BNC-SMB 1050 mm	A60J2 to **OVEN** (Option 001 only)
"6"	04195-61648	BNC-SMB 600 mm	A51J2 to **DC** (front)
"7" "8"	04195-61677	SMA-SMC Semi-Rigid	A22J2 to A34J2

APPENDIXES

APPENDIX A

MANUAL BACKDATING

This appendix contains the information required to adapt this manual to earlier versions or configurations of the HP 4195A than the current printing date of this manual. The information in this manual applies directly to HP 4195A Network/Spectrum Analyzers whose serial number prefix is listed on the title page of this manual.

To adapt this manual to your HP 4195A, refer to Table 1 and 2, and make all of the manual changes listed opposite your instrument's serial number and ROM-based firmware's version.

Instruments manufactured after the printing of this manual may be different than those documented in this manual. Later instrument versions will be documented in a manual changes supplement that will accompany the manual shipped with that instrument. If your instrument serial number is not listed on the title page of this manual or in Table 1, it may be documented in the yellow **MANUAL CHANGES** supplement. Refer to the description of the **REV?** command in paragraph 6-5-3 of the operation manual for confirmation of the ROM-based firmware's version. For additional information on serial number coverage, refer to SERIAL NUMBER in SECTION 7 of the operation manual.

Table 1. Manual Changes by Serial Number

Serial Prefix or Number	Make Manual Changes
	There are no earlier versions or configurations than the printing date of this manual.

Table 2. Manual Changes by Firmware's Version

Revision	Make Manual Changes
	There are no earlier versions or configurations than the printing date of this manual.

APPENDIX B

SERVICE FUNCTIONS

This appendix introduces the HP 4195A Service Functions which are used to adjust, calibrate, and test & checkout the HP 4195A. Table 1 list the service function menu.

Table 1. Service Function Menu

ADJUSTMENT & CALIBRATION	
10:	Phase Detectors' Tracking Adjustment
11:	Receiver BPF Tuning Voltage Calibration
12:	Receiver Frequency Response Calibration
13:	Source BPF Tuning Voltage Calibration
14:	Signal Source Gain Adjustment
15:	Signal Source Amplitude Calibration
16:	Signal Source Linearity Calibration
17:	Signal Source DC offset Adjustment
18:	Signal Source Flatness Calibration
19:	IF Amplifier Gain/Phase Adjustment
20:	IF Amplifier 10 dB Gain Adjustment
81:	Display Position and Size Adjustment
83:	Display Focus and Convergence Adjustment
86:	Display White Balance Adjustment
90:	Display V HOLD Adjustment
TEST & CHECKOUT	
31:	ADC Raw Data Check
40:	Fractional N PLL Lock Range Check
50:	Receiver BPF Tuning DAC Data Set
51:	Source BPF Tuning DAC Data Set
52:	Signal Source Level DAC Data Set
80:	Display Corner Distortion Check
82:	Display Resolution Check
84:	Display High Voltage Regulation Check
85:	Display Uniformity Check
87:	Display Video Amplifier Check
91:	Display H HOLD Margin Check
100:	CPU A DRAM Read/Write Test
101:	CPU B DRAM Read/Write Test
102:	CPU A SRAM Read/Write Test
103:	CPU B SRAM Read/Write Test
104:	CPU A VRAM Read/Write Test
105:	CPU B EEPROM Read Test
106:	CPU B EEPROM Write (Erase) Test
110:	Color Table Operation Check
120:	Keyboard Test
121:	LED Indicator Test
130:	ROM Check Sum List
140:	Disc Drive Fault Isolation

HOW TO ENTER SERVICE FUNCTION MODE

The following procedure is used to select and use a service function.

PROCEDURE:

1. Press the **blue** shift key. Confirm that the **blue** shift key indicator is ON. Press the **CLR LINE** key.

2. Press the following character keys to write "STSET" on the Keyboard Input Line.

   S, T, S, E, T

3. Press the **ENTER/EXECUTE** key. The Service Function menu will be displayed on the CRT.

NOTE

In the Service Function Menu page, two softkeys; **'TEST No.'** and **'EXIT'**, are available. The **'TEST No.'** softkey is used to select the service function. The **'EXIT'** softkey is used to return to the normal operation mode.

4. Press the **'TEST No.'** softkey. "STN=" will be displayed on the Keyboard Input Line.

5. Enter the desired service function number and press the **ENTER/EXECUTE** key to enter to the service function mode. For example, if you select service function No. 10, press the **1**, **0**, and **ENTER/EXECUTE** keys.

SERVICE FUNCTION SOFTKEY MEANINGS

The meaning of the softkeys available in all service function modes are:

START	Runs the service function.
STOP	Aborts the service function.
MENU	Displays the service function menu (returns to Service Function Menu page). This softkey is not available when the service function is running.
EXIT	Exits from the service function mode (returns to normal operation mode).

--- ADJUSTMENT & CALIBRATION ---

No. 10 Phase Detectors' Tracking Adjustment:

This function is used to minimize the gain and phase tracking errors of the 0°/90° Phase Detectors on the A9 board. The adjustment procedure is given in paragraph 3-24 in the Maintenance Manual.

No. 11 Receiver BPF Tuning Voltage Calibration:

This function is used to update the calibration data for the tuning voltage of the receiver voltage tunable bandpass filter. The calibration procedure is given in paragraph 3-25-2 in the Maintenance Manual.

No. 12 Receiver Frequency Response Calibration:

This function is used to update the calibration data for correcting the frequency response error on the receiver circuit. The calibration procedure is given in paragraph 3-25-4 in the Maintenance Manual.

No. 13 Source BPF Tuning Voltage Calibration:

This function is used to update the calibration data for the tuning voltage of the source voltage tunable bandpass filter. The calibration procedure is given in paragraph 3-25-5 in the Maintenance Manual.

No. 14 Signal Source Gain Adjustment:

This function is used to adjust the output level of the signal source. The adjustment procedure is given in paragraph 3-25-6 in the Maintenance Manual.

No. 15 Signal Source Amplitude Calibration:

This function is used to update the calibration data for correcting the error of the signal source output level. The calibration procedure is given in paragraph 3-25-7 in the Maintenance Manual.

No. 16 Signal Source Linearity Calibration:

This function is used to update the calibration data for correcting the linearity error of the signal source output level. The calibration procedure is given in paragraph 3-25-8 in the Maintenance Manual.

No. 17 Signal Source DC offset Adjustment:

This function is used to minimize the DC offset of the signal source output. The adjustment procedure is given in paragraph 3-22-1 in Maintenance Manual.

No. 18 Signal Source Flatness Calibration:

This function is used to update the calibration data for compensating the frequency characteristics of the signal source output level. The calibration procedure is given in paragraph 3-25-9 in Maintenance Manual.

No. 19 IF Amplifier Gain/Phase Adjustment:

This function is used to minimize the gain and phase difference by changing the gain of the -16 dB/4 dB amplifier on the A20 board. In this test function mode, the gain difference and phase difference are monitored. The displayed data will be approximately 0, when the cable is connected between the OUTPUT S1 connector and INPUT R1 connector. The adjustment procedure is given in paragraph 3-18-3 in the Maintenance Manual.

No. 20 IF Amplifier 10 dB Gain Adjustment:

This function is used to minimize the gain difference by changing the gain of the 12 dB/ 22 dB amplifier on the A20 board. In this test function mode, the gain difference is monitored. The displayed data is approximately 0, when the cable is connected between OUTPUT S1 and INPUT R1. The adjustment procedure is given in paragraph 3-18-4 and 3-18-5 in the Maintenance Manual.

No. 81 Display Position and Size Adjustment:

This function is used to adjust and troubleshoot the CRT display by displaying an 8 by 6 graticule. To abort this function mode, press the second softkey. The adjustment procedure is given in paragraphs 3-10-4, and 3-10-8 in the Maintenance Manual.

No. 83 Display Focus and Convergence Adjustment:

This function is used to adjust and troubleshoot the CRT display by displaying a 17 by 13 dot pattern. The color of the dots can be changed by pressing the **up/down CURSOR** arrow keys. To abort this test function mode, press the second softkey. The adjustment procedure is given in paragraph 3-10-9 in the Maintenance Manual.

No. 86 Display White Balance Adjustment:

This function is used to adjust and troubleshoot the CRT display. Four areas of different intensity will be displayed. To abort this function mode, press the second softkey. The adjustment procedure is given in paragraph 3-10-7 in the Maintenance Manual.

No. 90 Display V HOLD Adjustment:

This function is used to adjust and troubleshoot the CRT display driver. Two vertical sync frequencies are continuously generated. The adjustment procedure is given in paragraph 3-10-3 in the Maintenance Manual. To abort this function mode, press the second softkey.

--- TEST & CHECK ---

No. 31 ADC Raw Data Check:

This function is used to troubleshoot the A9 Phase Detector/A-D Converter board. The data displayed are **AD-0** and **MAGNITUDE**. **AD-0** is the 0° component data of the A-D converter on the A9 board. The 90° component data (AD-90) is given by calculation, as the **MAGNITUDE** is given by SQR(AD-0²+AD-90²). To perform this function, the cable must be connected between the OUTPUT S1 connector and INPUT R1 connector.

Under ideal conditions the relationship between the displayed values will be as shown below. The tolerances between ideal values and actual values cannot be given exactly, but this information will be helpful when troubleshooting the reference detection phase generator.

Phase	AD-0	MAGNITUDE
0	a	c
π	-a	c
[1/2]π	b	c
[3/2]π	-b	c

The **'OSC LVL 6 dB UP'** and **'OSC LVL 6dB DWN'** softkeys are used to increase and decrease the oscillator level in 6 dB steps. By pressing the **'OSC LVL 6 dB DWN'** softkey, the DAC data will be the one-half the value of the previous value. When the DAC data value is higher (approx. 64 to 4095), the displayed value of **MAGNITUDE** will increase to about twice the value, or decrease to about one-half the value of the previous value.

No. 40 Fractional N PLL Lock Range Check:

This function is used to check the fractional N loop on the A10 board. To perform this test, press the **'START'** softkey, and set the VCO frequency using the following procedure.

1. Press the **'VCO FREQ'** softkey. "FREQ=" is displayed on the Keyboard Input Line.
2. Enter any number (225 MHz to 425 MHz, in 1 Hz steps) for the desired VCO frequency.
3. Press the **Hz, kHz, MHz** or **ENTER/EXECUTE** key.

In this function mode, the setting value of VCO frequency, and **LOCK** or **UNLOCK** are displayed. If the A10 board is normal, **LOCK** will be displayed.

No. 50 and No. 51 Receiver/Source BPF Tuning DAC Data Set:

Service function No. 50 is used to adjust and troubleshoot the A23 Receiver Input Filter board. The adjustment procedure is given in paragraph 3-15 in the Maintenance Manual.

Service Function No. 51 is used to adjust and troubleshoot the A44 Source Output Filter board. The adjustment procedure is given in paragraph 3-21 in the Maintenance Manual.

The **'FILTER select'** softkey is used to select one of three voltage tunable bandpass filters; **low** (150 MHz to 225 MHz BPF), **mid** (225 MHz to 340 MHz BPF) and **high** (340 MHz to 500 MHz BPF). The **'DAC data'** softkey is used to set the tuning voltage for the voltage

tunable BPF. The variable range of DAC data is 0 to 255. As the DAC data is set to high, the center frequency of the BPF pass band shifts towards the higher frequencies.

No. 52 Signal Source Level DAC Data Set:

This function is used to troubleshoot the A130 Reference Frequency Converter board. The **'ALC switch'** softkey is used to control the switch A130U1 (ALC on/off). The **'SWP DAC data'** and **'SPT DAC data'** softkeys are used to set the level of the ALC-DA-DC signal from A50 board to A130 board. The variable range of DAC data is 0 to 4095.

No. 80 Display Corner Distortion Check:

This function is used to troubleshoot the CRT display by displaying three different rectangular scales. To abort this function mode, press the second softkey.

No. 82 Display Resolution Check:

This function is used to troubleshoot the CRT display by displaying a special pattern. The color of the pattern can be changed by pressing the arrow keys (up/down). To abort this function mode, press the second softkey.

No. 84 Display High Voltage Regulation Check:

This function is used to troubleshoot the CRT display by displaying a special pattern which is similar to that used in service function No. 81. The white band will be slightly distorted because the HP 4195A's voltage regulator cannot supply enough current. To abort this function mode, press the second softkey.

No. 85 Display Uniformity Check:

This function is used to troubleshoot the CRT circuits by displaying a solid white screen. Press the arrow keys (up/down) to change the color of the display. To abort this function, press the second softkey.

No. 87 Display Video Amplifier Check:

This test is used to troubleshoot the CRT display. Four brightness bands; red, blue, green and white, will be displayed. To abort this function mode, press the second softkey.

No. 91 Display H HOLD Margin Check:

This function is used to troubleshoot the CRT display driver. Two horizontal sync. frequencies are continuously generated. To abort this function mode, press the second softkey.

No. 100 through No. 103:

CPU A (CPU on the A6 board) or CPU B (CPU on the A8 board) performs a read/write test of the dynamic RAMs on the A7 board or the static RAMs on the A6 or A8 board, respectively.

An example error message is "RAM R/W error, adrs=nnnnnnH", where nnnnnnH is the address in hex where the read/write error occurred. This test executes repeatedly until the **'STOP'** or **'EXIT'** softkey is pressed.

NOTE

Service Function No. 102 erases all User Defined Functions, User Math, OPEN/SHORT/LOAD Standard Data, HP-IB Address, and Plot Area Scale.

No. 104 CPU A VRAM Read/Write Test:

This function is used to test the video RAMs and is performed automatically. This test requires about 50 seconds to complete.

No. 105 CPU B EEPROM Read Test:

This function performs an EEPROM read test.

No. 106 CPU B EEPROM Write Test:

This function performs an EEPROM write/erase test. To perform this test, set A8W2 to its lower-most position.

CAUTION

THIS TEST ERASES ALL EEPROM DATA. IF YOU DON'T INTEND TO PERFORM UPDATING CALIBRATION DATA, PARAGRAPH 3-25 IN THE MAINTENANCE MANUAL, DO NOT PERFORM THIS TEST.

No. 110 Color Table Operation Check

For design use only.

No. 120 keyboard Test:

This function is used to check the front panel key switches. The key numbers are shown in Figure 1. When the **'START'** softkey is pressed, the message "Pressed Key or RPG=" is displayed. If any key is pressed, the message "Pressed Key or RPG= XXX" is displayed. XXX indicates the key number assigned to the key. If the RPG is rotated clockwise, the message "Pressed Key or RPG= CW" is displayed. To abort this test, press the **ENTER/EXECUTE** key. The key number for the key on the control unit front panel changes for shift key operation, as follows.

[any key]	0XX
[blue shift key] on, [any key]	1XX
[green shift key], [any key]	2XX
[blue shift key] on, [green shift key], 'any key'	3XX

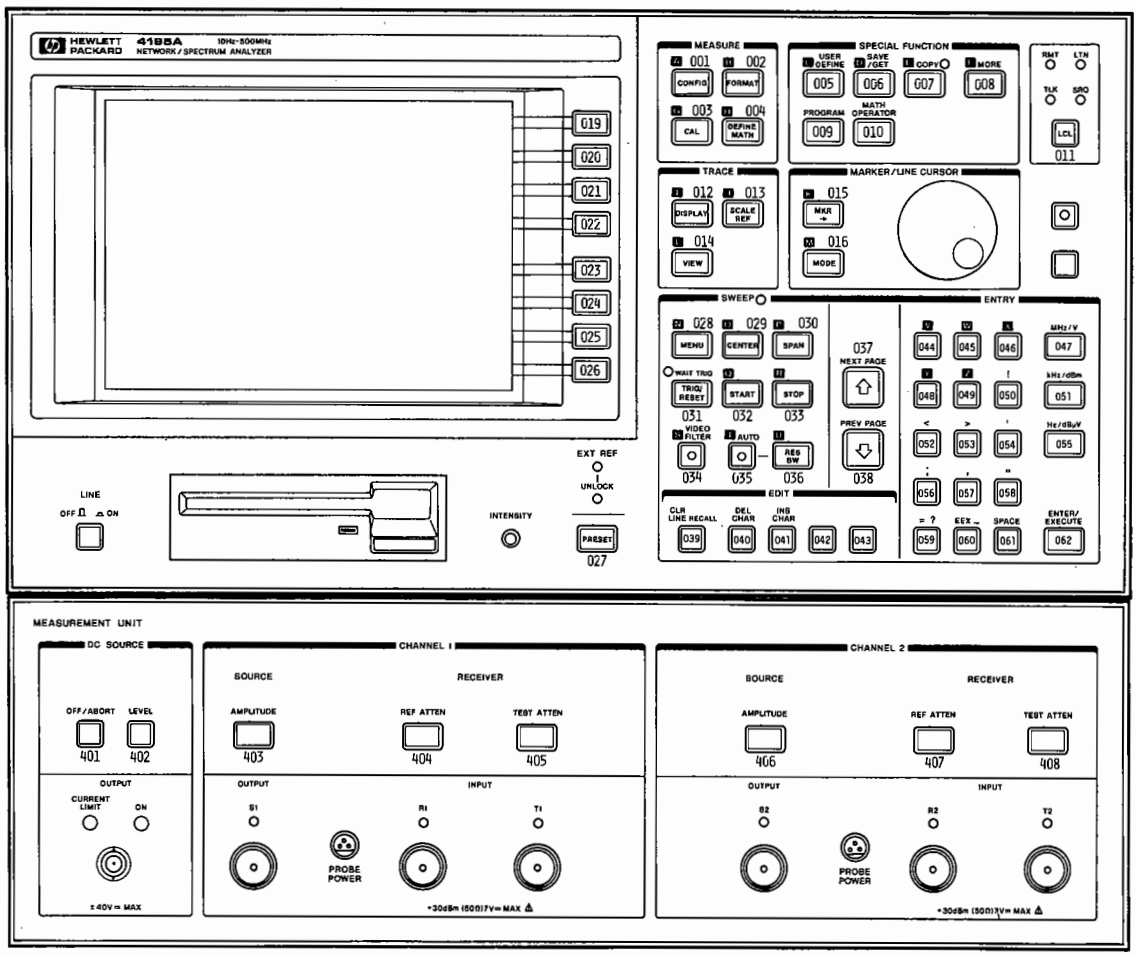

Figure 1. Key Numbers

No. 121 LED Indicator Test:

This function is used to check the LED indicators on the front panel. If the HP 4195A is not phase-locked, all LEDs except for the **UNLOCK** indicator on the front panel will be turned **ON** and **OFF** (switching period is approx. 1 second), and the **UNLOCK** indicator will be **ON**. If the HP 4195A is phase-locked with the reference signal, all LEDs except for the **EXT REF** indicator will be turned **ON** and **OFF**, and the **EXT REF** indicator will be **ON**.

No. 130 ROM Check Sum List:

For design use only.

No. 140 Disc Drive Fault Isolation:

This function is used to troubleshoot the flexible disc drive section by performing a read/ write test of the flexible disc drive. To perform this function, use a formatted but blank flexible disc, otherwise the data on the disc will be overwritten by this test.

APPENDIX C

ASSEMBLY LOCATIONS

CONTROL UNIT (UPPER UNIT) TOP VIEW

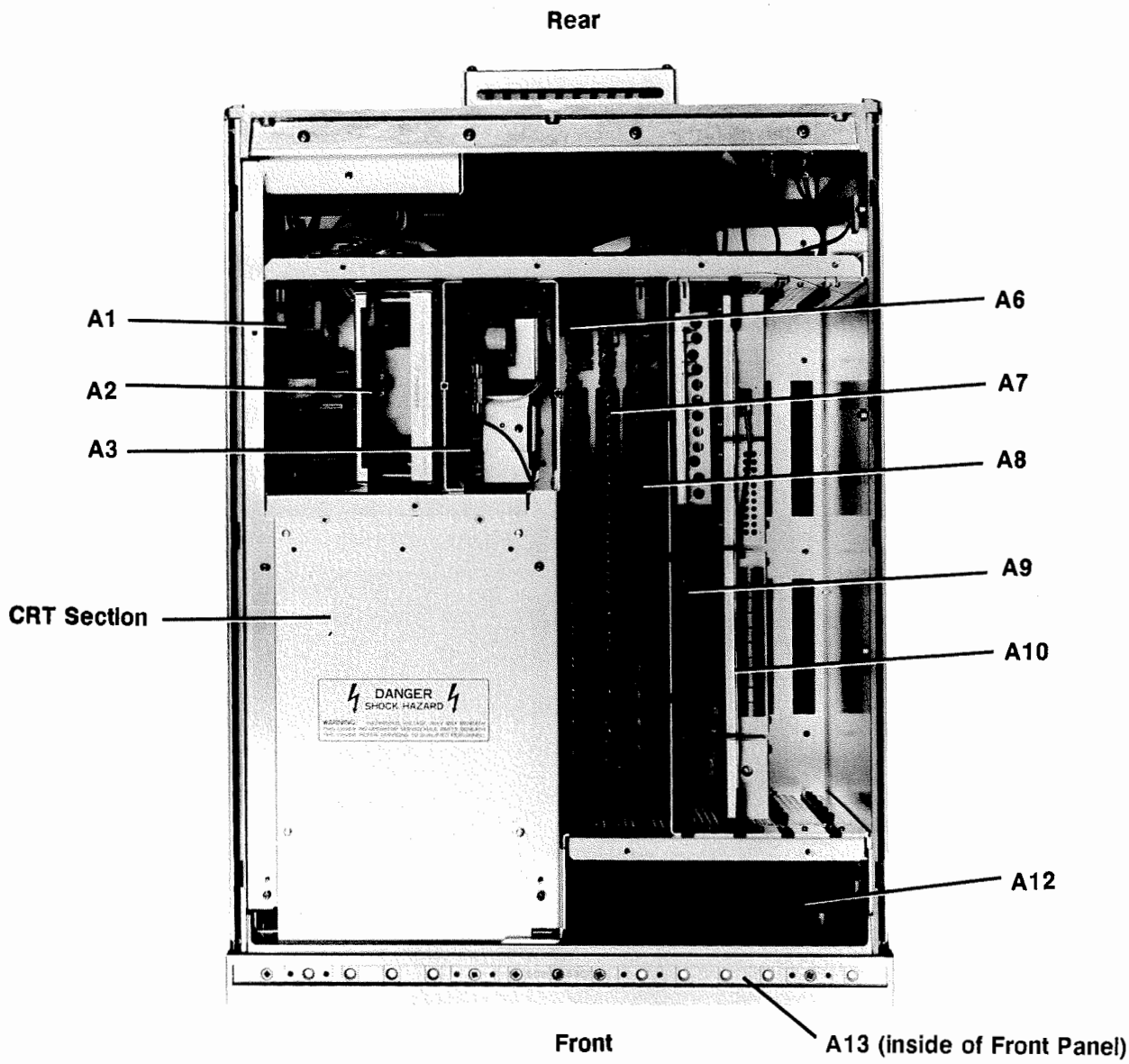

WARNING

CAPACITORS ON THE A1 BOARD REMAIN CHARGED WITH HAZARDOUS VOLTAGES FOR A PERIOD OF TIME AFTER THE INSTRUMENT IS TURNED OFF. ALLOW AT LEAST TWO MINUTES FOR THE CAPACITORS TO DISCHARGE AFTER THE INSTRUMENT IS TURNED OFF. (LEDS A1DS1 AND DS2 SHOW THAT DANGEROUS ENERGY REMAINS IN CAPACITORS ON A1 BOARD.)

CONTROL UNIT (UPPER UNIT) BOTTOM VIEW

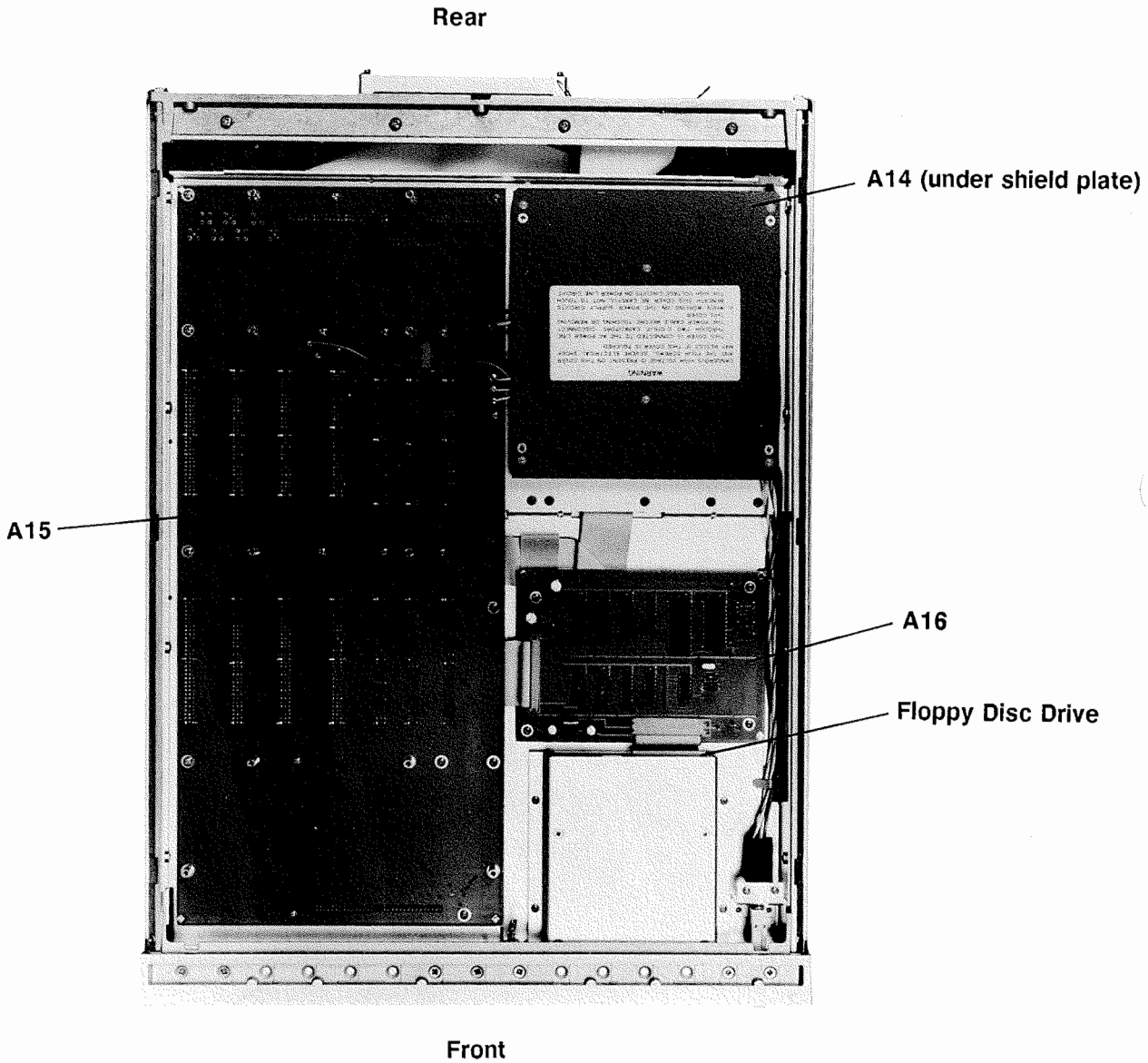

CRT SECTION TOP VIEW

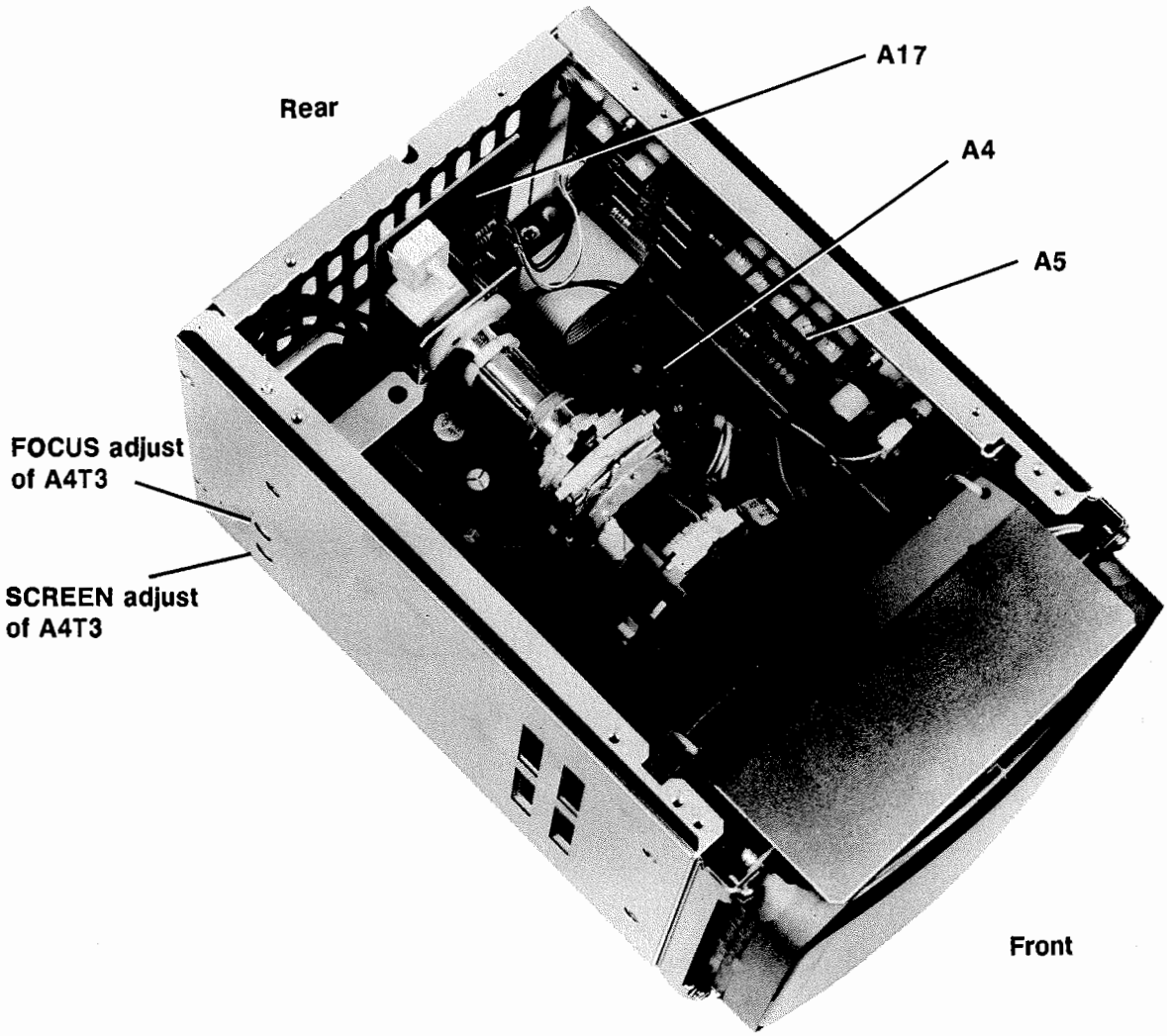

WARNING

HAZARDOUS VOLTAGE (16 kV MAX) EXISTS IN THE CRT SECTION.

MEASUREMENT UNIT (LOWER UNIT) TOP VIEW

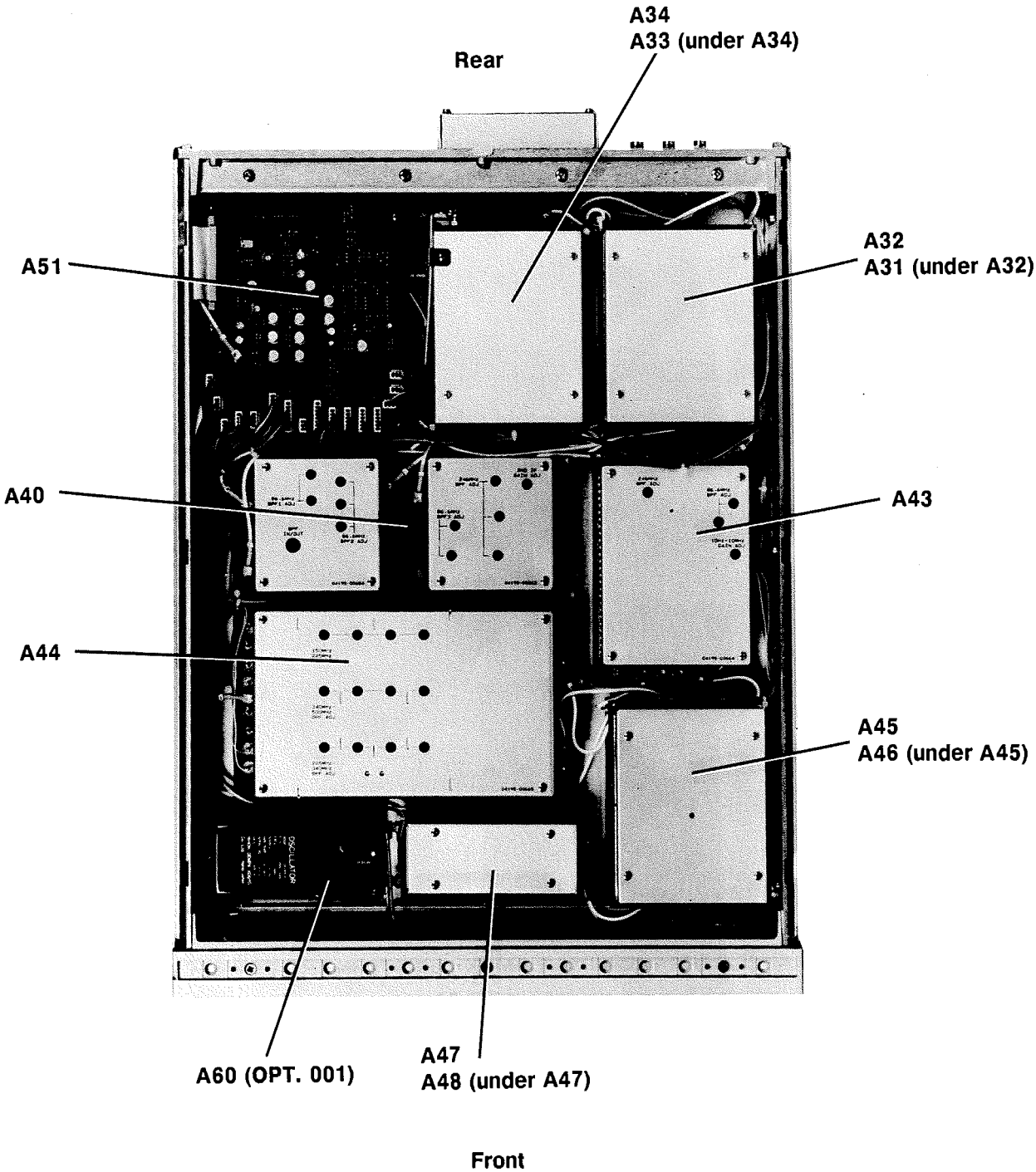

MEASUREMENT UNIT (LOWER UNIT) BOTTOM VIEW

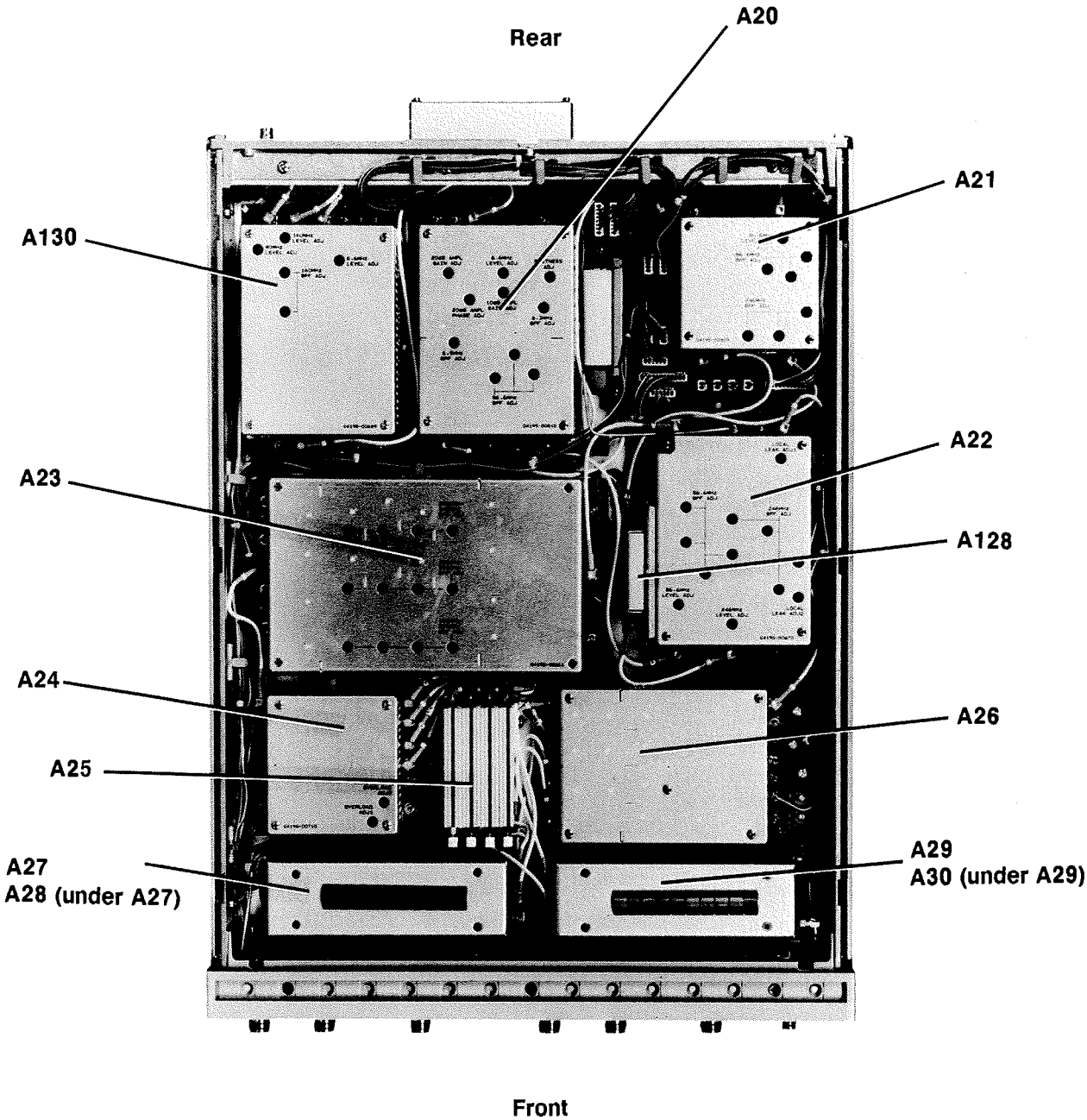

REGIONAL SALES AND SUPPORT OFFICES

For information relating to Sales or Support of Hewlett-Packard products first contact your local Hewlett-Packard office listed in the white pages of your telephone directory. If none is listed locally, contact one of the addresses listed below to obtain the address or phone number of the Hewlett-Packard Sales or Support office nearest you.

ASIA

Hewlett-Packard Asia Ltd.
47/F, 26 Harbour Road,
Wanchai, **HONG KONG**
G.P.O. Box 863, Hong Kong
Tel: (852)5-8330833
Telex: 76793 HPA HX
Cable HPASIAL TD

AUSTRALASIA

Hewlett-packard Australia Ltd.
31-41 Joseph Street
BLACKBURN, Victoria 3130
Australia
Tel: (61)895-2895
Telex: 31-024
Cable: HEWPARD Melbourne

CANADA

Hewlett-Packard (Canada) Ltd.
6877 Goreway Drive
MISSISSAUGA, Ontario L4V 1M8
Tel: (416)678-9430
Telex: 069-8644

JAPAN

Yokogawa-Hewlett-Packard Ltd.
29-21 Takaido-Higashi, 3 Chome
Suginami-ku **TOKYO** 168
Tel: 03(331)6111
Telex: 232-2024 YHPTOK

MEDITERRANEAN AND MIDDLE EAST

Hewlett-Packard S.A.
Mediterranean and Middle East
Operations
Atrina Centre
32 Kifissias Avenue
Paradissos-Amarousion, **ATHENS**
Greece
Tel: (30)682 88 11
Telex: 21-6588 HPAT GR
Cable: HEWPACKSA Athens

May, 1990

BENELUX & SCANDINAVIA

Hewlett-Packard S.A.
Uilenstede 475
P.O. Box 999
NL-1183 AG **AMSTELVEEN**
The Netherlands
Tel: (31)20/43 77 71
Telex: 18 919 hpner nl

SOUTH & EAST EUROPE, AFRICA

Hewlett-Packard S.A.
7 rue du Bois-du-Lan
CH-1217 **MEYRIN** 2, Geneva
Switzerland
Tel: (41)22/83 12 12
Telex: 27835 hmea
Cable: HEWPACKSA Geneva

FRANCE

Hewlett-Packard France
Parc d'activites du Bois Briard
2, avenue du Lac
91040 **EVRY** Cedex
Tel: 1 6/077 83 83
Telex: 6923 15F

GERMAN FEDERAL REPUBLIC

Hewlett-Packard GmbH
Hewlett-Packard-Strasse
Postfach 1641
D-6380 **BAD HOMBURG**
West Germany
Tel: 06172/400-0
Telex: 410 844 hpbhg

ITALY

Hewlett-Packard Italiana S.p.A.
Via G. Di Vittorio 9
1-20063 **CERNUSCO SUL NAVIGLIO**
(Milano)
Tel: 02/92 36-91
Telex: 334632

UNITED KINGDOM

Hewlett-Packard Ltd.
King Street Lane
Winnersh, **WOKINGHAM**
Berkshire RG11 5AR
Tel: 734/78/ 47 74
Telex: 847178

EASTERN USA

Hewlett-Packard Co.
4 Choke Cherry Road
ROCKVILLE, MD 20850
TEL: (301)670-4300

MIDWESTERN USA

Hewlett-Packard Co.
5201 Tollview Drive
ROLLING MEADOWS, IL 6008
Tel: (312)255-9800

SOUTHERN USA

Hewlett-Packard Co.
2000 South Park Place
P.O. Box 105005
ATLANTA, GA 30348
Tel: (404)955-1500

WESTERN USA

Hewlett-Packard Co.
5161 Lankershim Blvd.
P.O. Box 3919
NO. HOLLYWOOD, CA 91609
Tel: (818)506-3700

OTHER INTERNATIONAL AREAS

Hewlett-Packard Co.
Intercontinental Headquarters
3495 Deer Creek Road
PALO ALTO, CA 94304
Tel: (415)857-1501
Telex: 034-8300
Cable: HEWPACK

HP 4195A
Network/Spectrum Analyzer

MANUAL IDENTIFICATION

Model Number: HP 4195A
Date Printed: August 1988
Part Number: 04195-90200

This supplement contains information for correcting manual errors and for adapting the manual to newer instruments that contains improvements or modifications not documented in the existing manual.

To use this supplement
1. Make all ERRATA corrections
2. Make all appropriate serial-number-related changes listed below

SERIAL PREFIX OR NUMBER	MAKE MANUAL CHANGES
ALL	1

SERIAL PREFIX OR NUMBER	MAKE MANUAL CHANGES

▸ New Item

▸ ERRATA

Page A4-8, Table 2. A17 Replaceable Parts

See the Parts Information Table (1 of 2) at the end of this supplement.

▸ CHANGE 1

Page A20-4, A24-3, A26-5, A43-4, A44-4, A44-5 and A45-4, HP Part Number 1901-0948 on each Replaceable Parts list.

See the Parts Information Table at the end of this supplement.

Page A4-4, Table 1. A4 Replaceable Parts (1 of 4)

See the Parts Information Table (2 of 2) at the end of this supplement.

Page A4-5, Table 1. A4 Replaceable Parts (2 of 4)

See the Parts Information Table (2 of 2) at the end of this supplement.

Page A6-5, Table 1. A6 Replaceable Parts (2 of 4)

See the Parts Information Table (2 of 2) at the end of this supplement.

NOTE
Manual change supplement are revised as often as necessary to keep manuals as current and accurate as possible. Hewlett-Packard recommends that you periodically request the latest edition of this supplement. Free copies are available from all HP offices. When requesting copies, quote the manual identification information from your supplement, or the model number and print date from the title page of the manual.

PRINTED IN JAPAN

HEWLETT PACKARD

Page A27-3, Table 2. A27, A28, A29, A30 Replaceable Parts (1 of 2)

See the Parts Information Table (2 of 2) at the end of this supplement.

Page A47-2, Table 1. A47/A48 Replaceable Parts

See the Parts Information Table (2 of 2) at the end of this supplement.

Page A51-4, Table 1. A51 Replaceable Parts (2 of 4)

See the Parts Information Table (2 of 2) at the end of this supplement.

Parts Information Table (1 of 2)

Change	Page	Note	Reference Designator	HP Part Number	Qty.	Description
ERRATA	A4-8	C	A17J1	1200-1407	1	SOCKET CRT
1	A20-4	C	A20CR1	1901-1381	1	DIODE-SWITCHING
			A20CR2	1901-1381	1	DIODE-SWITCHING
			A20CR3	1901-1381	1	DIODE-SWITCHING
			A20CR4	1901-1381	1	DIODE-SWITCHING
			A20CR5	1901-1381	1	DIODE-SWITCHING
			A20CR6	1901-1381	1	DIODE-SWITCHING
			A20CR7	1901-1381	1	DIODE-SWITCHING
			A20CR8	1901-1381	1	DIODE-SWITCHING
	A24-3	C	A24CR2	1901-1381	1	DIODE-SWITCHING
			A24CR4	1901-1381	1	DIODE-SWITCHING
			A24CR6	1901-1381	1	DIODE-SWITCHING
			A24CR7	1901-1381	1	DIODE-SWITCHING
			A24CR8	1901-1381	1	DIODE-SWITCHING
			A24CR10	1901-1381	1	DIODE-SWITCHING
	A26-5	C	A26CR2	1901-1381	1	DIODE-SWITCHING
			A26CR8	1901-1381	1	DIODE-SWITCHING
			A26CR14	1901-1381	1	DIODE-SWITCHING
			A26CR22	1901-1381	1	DIODE-SWITCHING
	A43-4	C	A43CR1	1901-1381	1	DIODE-SWITCHING
			A43CR2	1901-1381	1	DIODE-SWITCHING
			A43CR3	1901-1381	1	DIODE-SWITCHING
			A43CR4	1901-1381	1	DIODE-SWITCHING
			A43CR5	1901-1381	1	DIODE-SWITCHING
			A43CR6	1901-1381	1	DIODE-SWITCHING
	A44-4	C	A44CR5	1901-1381	1	DIODE-SWITCHING
			A44CR6	1901-1381	1	DIODE-SWITCHING
			A44CR7	1901-1381	1	DIODE-SWITCHING
			A44CR8	1901-1381	1	DIODE-SWITCHING
			A44CR9	1901-1381	1	DIODE-SWITCHING
			A44CR10	1901-1381	1	DIODE-SWITCHING
			A44CR11	1901-1381	1	DIODE-SWITCHING
			A44CR12	1901-1381	1	DIODE-SWITCHING
			A44CR13	1901-1381	1	DIODE-SWITCHING
			A44CR22	1901-1381	1	DIODE-SWITCHING
			A44CR23	1901-1381	1	DIODE-SWITCHING
			A44CR24	1901-1381	1	DIODE-SWITCHING
			A44CR25	1901-1381	1	DIODE-SWITCHING
			A44CR26	1901-1381	1	DIODE-SWITCHING
			A44CR27	1901-1381	1	DIODE-SWITCHING

Note:
A: Add
C: Change
D: Delete

Parts Information Table (2 of 2)

Change	Page	Note	Reference Designator	HP Part Number	Qty.	Description
1	A44-4	C	A44CR28	1901-1381	1	DIODE-SWITCHING
			A44CR29	1901-1381	1	DIODE-SWITCHING
			A44CR32	1901-1381	1	DIODE-SWITCHING
			A44CR33	1901-1381	1	DIODE-SWITCHING
			A44CR34	1901-1381	1	DIODE-SWITCHING
			A44CR35	1901-1381	1	DIODE-SWITCHING
			A44CR36	1901-1381	1	DIODE-SWITCHING
			A44CR37	1901-1381	1	DIODE-SWITCHING
			A44CR38	1901-1381	1	DIODE-SWITCHING
			A44CR39	1901-1381	1	DIODE-SWITCHING
			A44CR40	1901-1381	1	DIODE-SWITCHING
	A44-5	C	A44CR45	1901-1381	1	DIODE-SWITCHING
			A44CR46	1901-1381	1	DIODE-SWITCHING
			A44CR47	1901-1381	1	DIODE-SWITCHING
	A45-4	C	A45CR1	1901-1381	1	DIODE-SWITCHING
			A44CR2	1901-1381	1	DIODE-SWITCHING
			A44CR3	1901-1381	1	DIODE-SWITCHING
			A44CR4	1901-1381	1	DIODE-SWITCHING
			A44CR8	1901-1381	1	DIODE-SWITCHING
			A44CR9	1901-1381	1	DIODE-SWITCHING
	A4-4	C	A4C11	0180-3297	1	CAPACITOR-FIXED 100UF
	A4-5	C	A4Q9	1853-0204	1	TRANSISTOR PNP 2N4918
	A6-5	C	A6U32	1820-4669	1	IC-82C54
	A27-3	C	A27K1	0490-1776	1	RELAY 4.5V
		C	A27K2	0490-1776	1	RELAY 4.5V
		C	A27K3	0490-1776	1	RELAY 4.5V
		C	A27K4	0490-1776	1	RELAY 4.5V
		C	A27K5	0490-1776	1	RELAY 4.5V
		C	A27K6	0490-1776	1	RELAY 4.5V
	A47-2	C	A47K6	0490-1776	1	RELAY 4.5V
	A51-4	C	A51Q1	1854-0523	1	TRANSISTOR NPN
		C	A51Q2	1854-0523	1	TRANSISTOR NPN
		C	A51Q6	1854-0523	1	TRANSISTOR NPN

Note:
A: Add
C: Change
D: Delete

HP 4195A

Network/Spectrum Analyzer

MANUAL IDENTIFICATION

Model Number: HP 4195A
Date Printed: August 1988
Part Number: 04195-90200

This supplement contains information for correcting manual errors and for adapting the manual to newer instruments that contain improvements or modifications not documented in the existing manual.

To use this supplement
1. Make all ERRATA corrections
2. Make all appropriate serial-number-related changes listed below

SERIAL PREFIX OR NUMBER	MAKE MANUAL CHANGES
ALL	1

SERIAL PREFIX OR NUMBER	MAKE MANUAL CHANGES

▶ New Item

▶ **ERRATA**

General Parts Listing, Pages 10 and 11

See the Parts Information Table at the end of this supplement.

A50 Board Service Sheet, Page A50-5, Table 1. (3 of 3)

Correct A50U15 as listed on the Parts Information Table at the end of this supplement

A27/A28/A29/A30 Boards Service Sheet, Page A27-5, Schematic Diagram

Correct the pin numbers of Relays K1 to K6 as shown.

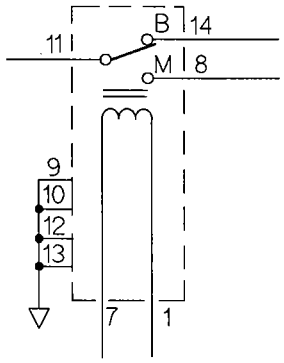

NOTE

Manual change supplements are revised as often as necessary to keep manuals as current and accurate as possible. Hewlett-Packard recommends that you periodically request the latest edition of this supplement. Free copies are available from all HP offices. When requesting copies, quote the manual identification information from your supplement, or the model number and print date from the title page of the manual.

HEWLETT PACKARD

PRINTED IN JAPAN

► **CHANGE 1**

General Parts Listing, Pages 5 and 6

Replace the sheet of pages 5 and 6 with pages 5A, 5B, and 6 attached with this supplement.

A6 Board Service Sheet, Page A6-5, Table 1. (2 of 4)

Change A6U32 as listed in the Parts Information Table at the end of this supplement.

A40 Board Service Sheet, Page A40-4, Table 1. (3 of 4)

Change A40R12, R13 and R14 as listed in the Parts Information Table at the end of this supplement.

A45/46 Board Service Sheet, Page A45-2, Table 1. (1 of 3)

Change A45C17 as listed in the Parts Information Table at the end of this supplement.

Parts Information Table

Change	Page	Note	Reference Designator	HP Part Number	Qty.	Description
ERRATA	GPL-10	►C	1	1250-0252	1	Connector BNC (for Opt. 001)
		►C		2950-0035	1	Nut (for Opt. 001)
		►C		2190-0102	1	Washer (for Opt. 001)
	GPL-11	►C	10	04195-64906	1	CRT Assembly
	A50-5	►C	A50U15	1826-1918	1	IC OP AMP LOW-OFS DUAL 8-DIC-PIN PKG
1	A6-5	►C	A6U32	1820-2837	1	IC-UPD8253-5
	A40-4	►C	A40R12	0757-0420	1	RESISTER 750 1% 0.125W
		►C	A40R13	0757-0421	1	RESISTER 825 1% 0.125W
		►C	A40R14	2100-0568	1	RESISTER-TRMR 100
	A45-2	►C	A45C17	0160-4385	1	CAPACITOR-FXD 15PF +-5%

GPL: General Parts Listing Section

Note: **A:** Add
C: Change
D: Deleted

Table 3. Major Mechanical Parts (Exploded View)

Control Unit

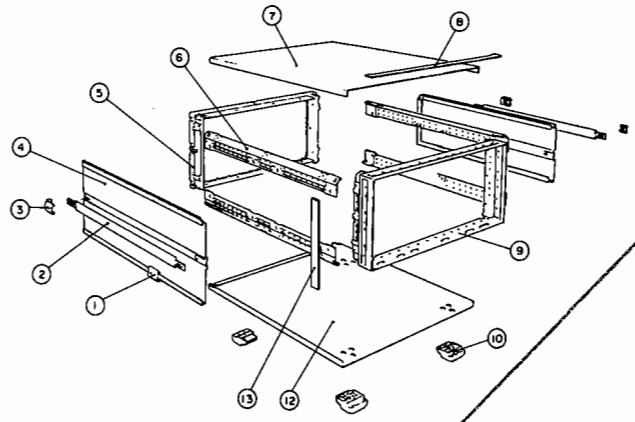

Measurement Unit

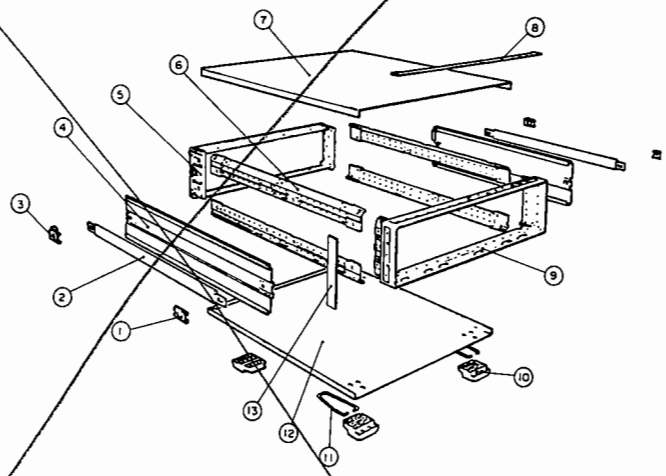

Ref. Desig.	Control Unit		Measurement Unit		Description
	Part Number	Qty	Part Number	Qty	
1	5041-6819	2	5041-6819	2	Cap Front
2	5060-9805	2	5060-9805	2	Strap Handle
3	5041-6820	2	5041-6820	2	Cap Rear
4	5060-9948	2	5060-9938	2	Cover Side
5	5021-5808	1	5021-5804	1	Frame Rear
6	5021-5838	4	5021-5838	4	Strut Corner
7	5061-9436	1	5061-9436	1	Cover Top
			04195-87106	1	Label
8	5040-7202	1	5040-7202	1	Trim Top
9	5021-5807	1	5021-5803	1	Frame Front
10	5040-7201	4	5040-7201	4	Foot
11	N/A	0	1460-1345	2	Stand Tilt
12	5061-9448	1	5061-9448	1	Cover Bottom
			04195-87107	1	Label
13	5001-0441	2	5001-0439	2	Trim Side

Table 4. Control Unit Front Panel Components

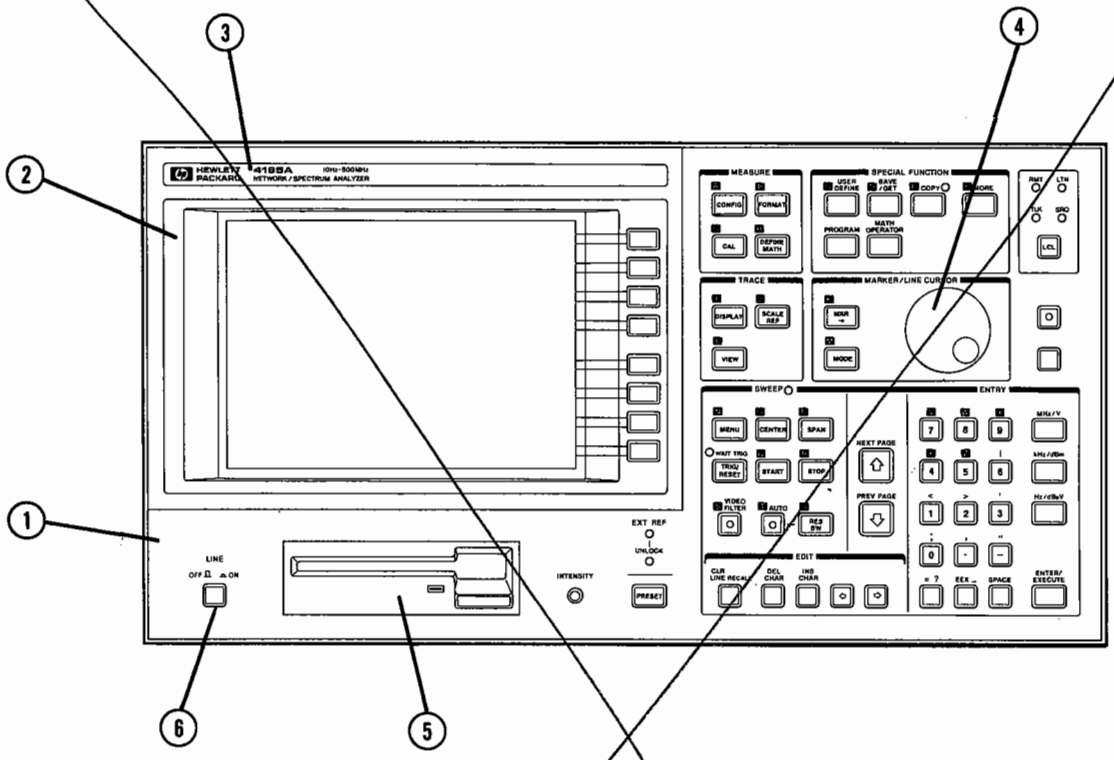

Reference Designator	Part Number	Qty.	Description
1	04195-00201	1	Panel Front
2	04195-40001	1	Bezel
	04195-00203	1	Panel, Sub Front
3	04195-87101	1	Label
4	0370-3033	1	Knob
5	0950-1752	1	Disc Drive
	04195-01201	1	Angle
	0515-0914	4	Screw Flat-Head
	0515-1550	4	Screw Pan-Head
6	5041-0564	1	Key Cap
	04194-40001	1	Rod

MANUAL CHANGES

HP 4195A

Network/Spectrum Analyzer

MANUAL IDENTIFICATION

Model Number: HP 4195A
Date Printed: August 1988
Part Number: 04195-90200

This supplement contains information for correcting manual errors and for adapting the manual to newer instruments that contain improvements or modifications not documented in the existing manual.

To use this supplement
1. Make all ERRATA corrections
2. Make all appropriate serial-number-related changes listed below

SERIAL PREFIX OR NUMBER	MAKE MANUAL CHANGES
ALL	1
2830J00760 and above	1, 2
2830J01177 and above	1, 2, 3
2904A and above 2904J and above	1, 2, 3, 4

SERIAL PREFIX OR NUMBER	MAKE MANUAL CHANGES

► New Item

► **ERRATA**

A6 Board Service Sheet, page A6-5, Table 1. A6 Replaceable Parts

Correct A6U32 as listed in Parts Information Table at the end of this supplement.

A6 Board Service Sheet, page A6-9, Schematic Diagram

Delete asterisks (*) from U13, U14, U29, U30.

Delete the note under the diagram which describes;

*: U13, U14, U15, U29, U30 and U31 are not installed.

NOTE

Manual change supplements are revised as often as necessary to keep manuals as current and accurate as possible. Hewlett-Packard recommends that you periodically request the latest edition of this supplement. Free copies are available from all HP offices. When requesting copies, quote the manual identification information from your supplement, or the model number and print date from the title page of the manual.

HEWLETT PACKARD

PRINTED IN JAPAN

A6 Board Service Sheet, page A6-11, Schematic Diagram

Delete the note under the diagram which describes:

*SW1-5 (bit4)
OFF: OPTION 350
ON: OPTION 375

A8 Board Service Sheet, page A8-2, Figure 1.

Correct the ROM number from 001 through 011 to 031 through 041 as listed below.

U1	U2	U3	U4	U5	U6	U7	U8	U9	U10	U11
031	032	033	034	035	036	037	038	039	040	041

A130 Board Service Sheet, page A130-8, Table 1.

Correct A130U1 and U2 as listed in the Parts Information Table at the end of this supplement.

A43 Board Service Sheet, page A43-7, Schematic Diagram

Correct the feedthrough capacitors' reference designators as listed below:

Signal Name	Error	Correct
OUT-IF1-HF	C44	C11
OUT-IF1-LF	C47	C6
OUT-S1-LF	C6	C44
OUT-S2-LF	C11	C43
+16 V	C140	C47
-16 V	C43	C40

A44 Board Service Sheet, page A44-9, Schematic Diagram

Correct IC lead connections as listed below:

IC Leads	Error	Correct
U4 - 4	-12 V	common
U3 - 4	common	-12 V
U3 - 2, 3, 8	(no error)	common

General Parts Listing, page 6, Table 4

Add the Measurement Unit's top shield plate. See Parts Information Table at the end of this supplement.

► CHANGE 1

A6 Board Service Sheet, page A6-2, 3. A6SW1, A6SW2, A6SW3, A6SW4:

Add a note describing:

A6SW1-7 should be set to ON, only when the A18 (Low Noise Oscillator) is not installed and the firmware revision number is 2.00 (or above).

A6 Board Service Sheet, page A6-7, Table 1.

Add Revision 2.00 ROMs. See the Parts Information Table at the end of this supplement.

A8 Board Service Sheet, page A8-6, Table 1.

Add Revision 2.00 ROMs. See the Parts Information Table at the end of this supplement.

► CHANGE 2

General Parts Listing, page 5, Table 3

Change the SYSTEM II Cabinet parts. See the Parts Information Table at the end of this supplement.

► CHANGE 3

A50 Board Service Sheet, page A50-3, Table 1.

Change the A50 assembly's HP part number. See the Parts Information Table at the end of this supplement.

A50 Board Service Sheet, page A50-7, Schematic Diagram

Change U25B's negative DC power from -16 V to -12 V.

► **CHANGE 4**

Overall Troubleshooting, page 15, Block Diagram

Partially change the Block Diagram as shown below. The changes are:

add the A18 block between A10 and the rear panel connectors (J2 and J3)
add a "÷4" divider in A10
delete the VTF from A10

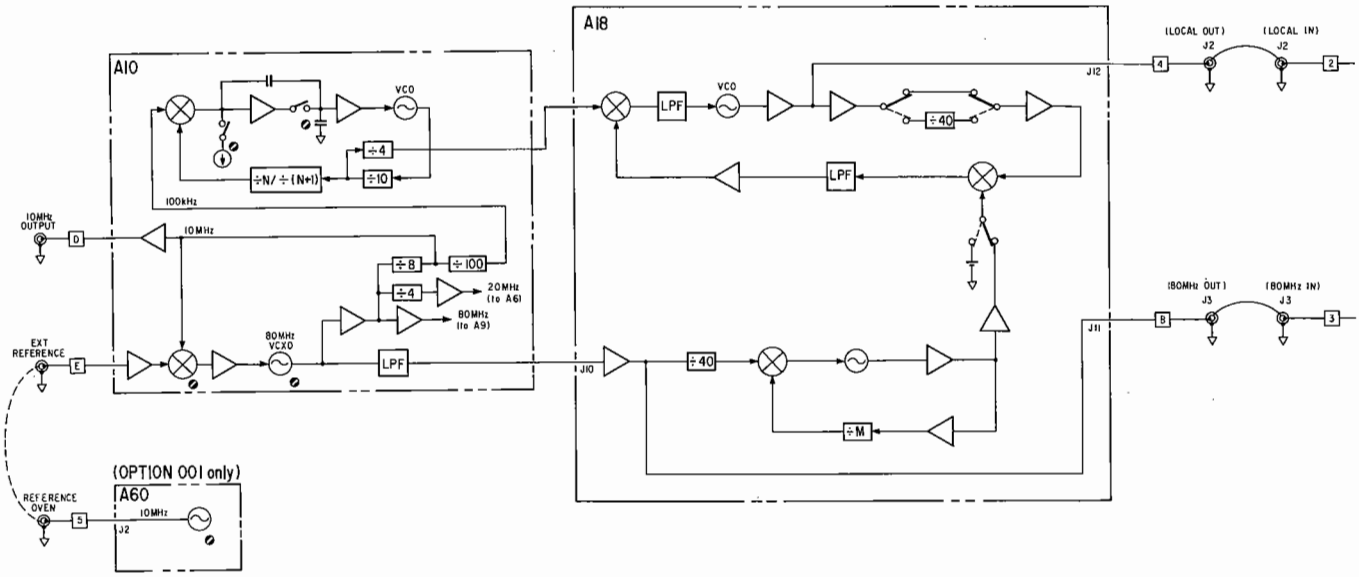

A6 Board Service Sheet

Add a note describing:

Only ROM based firmware revision 2.00 (or above) applies to HP 4195As with an A18 Low Noise Oscillator board. Firmware revision 2.00 (or above) also can be used for HP 4195A without an A18 board.

A8 Board Service Sheet

Add a note describing:

Only ROM based firmware revision 2.00 (or above) applies to HP 4195As with an A18 Low Noise Oscillator board. Firmware revision 2.00 (or above) also can be used for HP 4195As without an A18 board.

A10 Board Service Sheet, page A10-1, Figure 1.

Change Figure 1 as shown below.

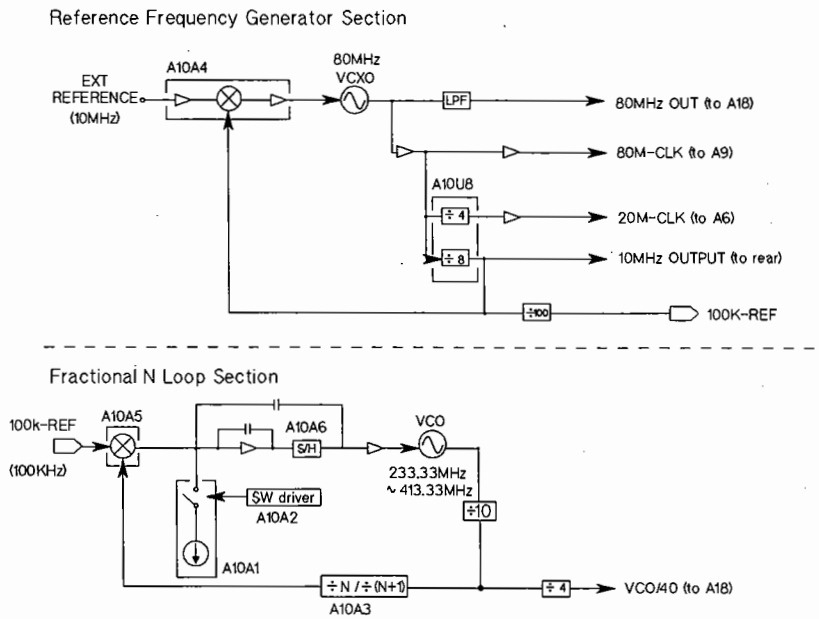

A10 Board Service Sheet, page A10-9 to A10-16, Table 1.

Change the A10 assembly's HP part Number and components. See the Parts Information Table at the end of this supplement.

A10 Board Service Sheet, page A10-18, Table 2.

Change the connector pin assignments as follows.

A10J5 (XR)	2	b	NC
	2	c	NC
	8	c	VCO/40
	12	b	NC
	12	c	NC
A10J4 (XL)	14	b	NC
	14	c	NC
	21	b	NC
	21	c	NC

A10 Board Service Sheet, page A10-19, Component Locations

Change C7's location to the space between C44 and C45. C7 is an aluminum electrolytic capacitor (radial lead type), and its minus lead is positioned closer to C45.

Insert R300 where C7 was installed.

Delete U9, C98, and J3.

A10 Board Service Sheet, page A10-19, Schematic Diagram (1 of 4)

Delete U9, C98, J3, and the coaxial cable between J2 and J3.

Add R300 and change C7 connection as shown below.

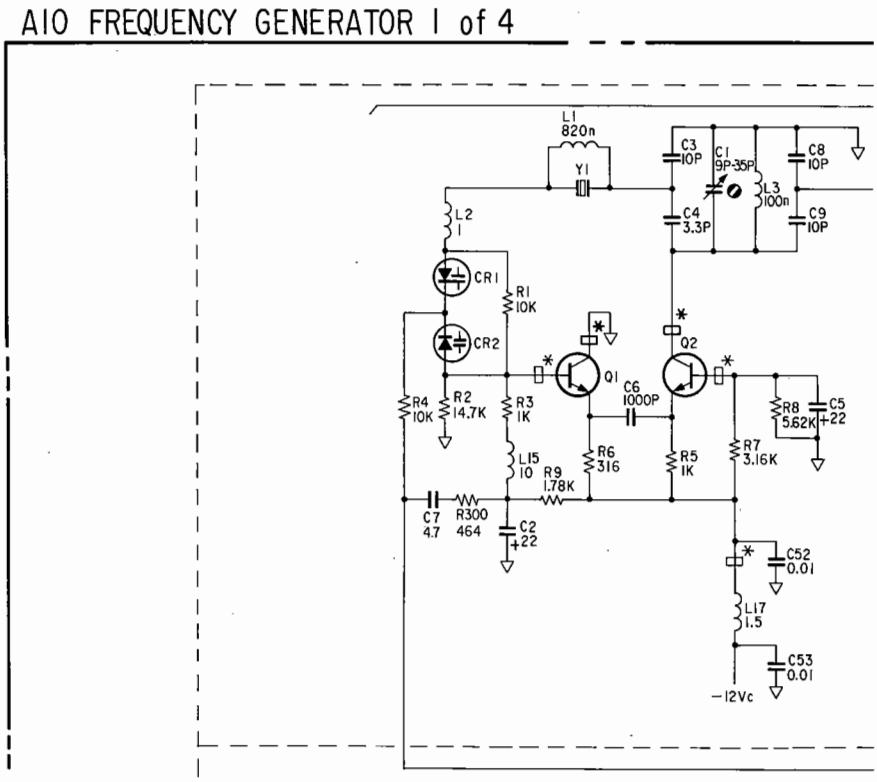

A10 Board Service Sheet, page A10-23, Component Locations

Delete the following components.

C128,	R78,	R214,	C203,	R211,	L35,
R79,	CR17,	CR18,	L33,	L36,	R212,
CR18,	CR19,	CR22,	CR23,	L34,	L37,
R213,	CR24,	CR23,	C206,	L204,	R80,
R81,	and R77.				

A10 Board Service Sheet, page A10-23, Schematic Diagram (3 of 4)

Partially change the diagram as show below. The changes are:

delete the TUNABLE LPF block and the 3 dB ATT block
change U17's positive dc supply connection
change **VCO/40** signal destination from "NC" to "to A18XR-8c"

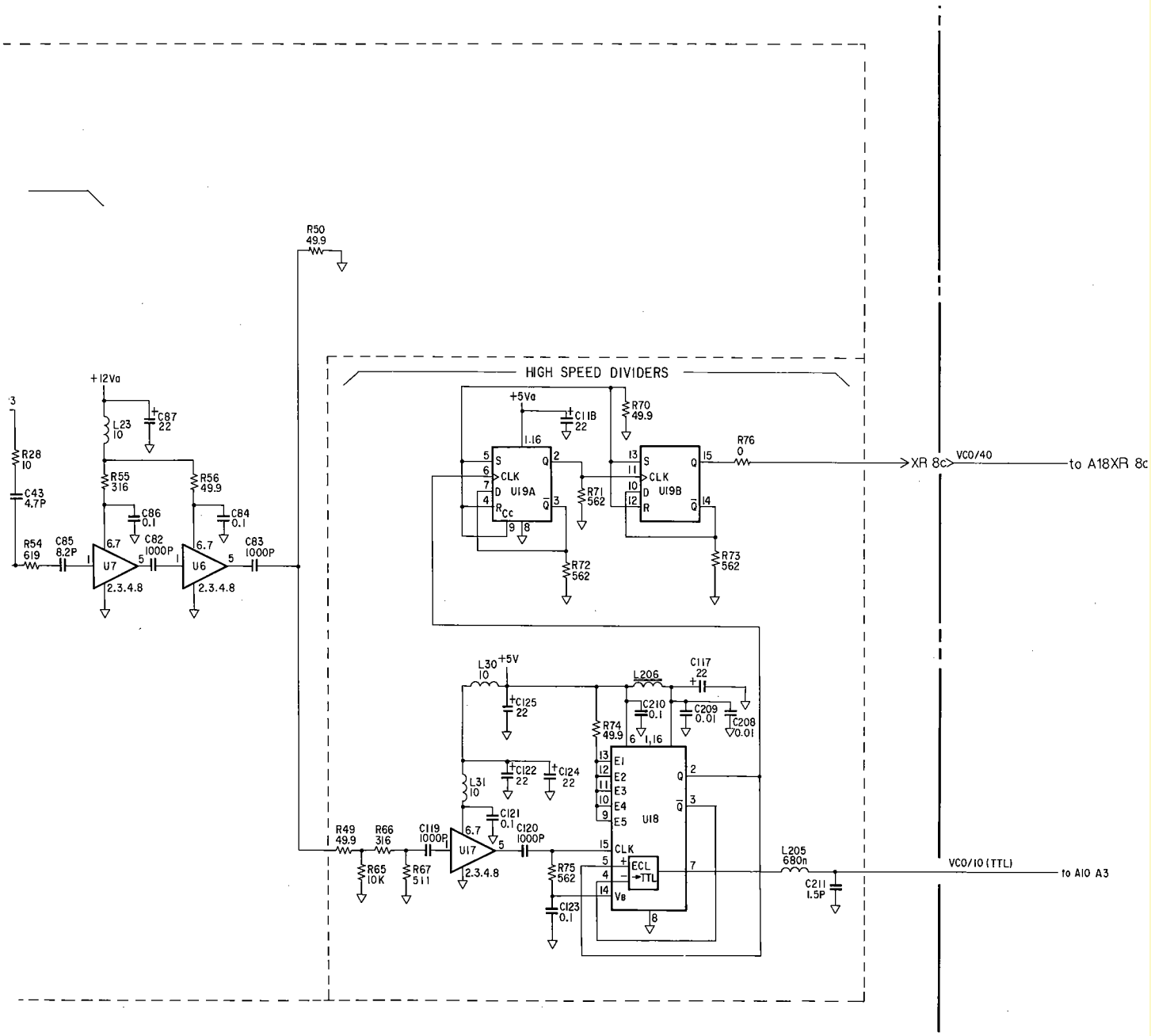

A18 Board Service Sheet

Add the A18 board service sheet (which is attached with this supplement) between the A10 and A12&A13 boards' service sheets.

General Parts Listing, page 6 through 12

See the Parts Information Table at the end of this supplement.

Appendix C, page C-1, CONTROL UNIT TOP VIEW

Add the A18 board which will be inserted in the slot to the right of and next to A10's slot.

Parts Information Table (1 of 3)

Change	Page	Note	Reference Designator	HP Part Number	Qty	Description
Errata	A6-5	►C	A6U32	1820-2873	1	IC UPD 8253-5
	A130-8	►C	A130U1	1826-1845	2	IC LT 1057CN8
		►C	A130U2	1826-1845	2	IC LT 1057CN8
	GPL-6	►A		04195-00605	1	Plate Top Shield
1	A6-7	►A	A6U4	04195-85401	1	ROM PROGRAMMED
		►A	A6U5	04195-85403	1	ROM PROGRAMMED
		►A	A6U6	04195-85405	1	ROM PROGRAMMED
		►A	A6U7	04195-85407	1	ROM PROGRAMMED
		►A	A6U8	04195-85409	1	ROM PROGRAMMED
		►A	A6U9	04195-85411	1	ROM PROGRAMMED
		►A	A6U10	04195-85413	1	ROM PROGRAMMED
		►A	A6U11	04195-85415	1	ROM PROGRAMMED
		►A	A6U12	04195-85417	1	ROM PROGRAMMED
		►A	A6U13	04195-85419	1	ROM PROGRAMMED
		►A	A6U14	04195-85421	1	ROM PROGRAMMED
		►A	A6U20	04195-85402	1	ROM PROGRAMMED
		►A	A6U21	04195-85404	1	ROM PROGRAMMED
		►A	A6U22	04195-85406	1	ROM PROGRAMMED
		►A	A6U23	04195-85408	1	ROM PROGRAMMED
		►A	A6U24	04195-85410	1	ROM PROGRAMMED
		►A	A6U25	04195-85412	1	ROM PROGRAMMED
		►A	A6U26	04195-85414	1	ROM PROGRAMMED
		►A	A6U27	04195-85416	1	ROM PROGRAMMED
		►A	A6U28	04195-85418	1	ROM PROGRAMMED
		►A	A6U29	04195-85420	1	ROM PROGRAMMED
		►A	A6U30	04195-85422	1	ROM PROGRAMMED
	A8-6	►A	A8U1	04195-85431	1	ROM PROGRAMMED
		►A	A8U2	04195-85432	1	ROM PROGRAMMED
		►A	A8U3	04195-85433	1	ROM PROGRAMMED
		►A	A8U4	04195-85434	1	ROM PROGRAMMED
		►A	A8U5	04195-85435	1	ROM PROGRAMMED
		►A	A8U6	04195-85436	1	ROM PROGRAMMED
2	GPL-5					**Control Unit**
		►C	1	5041-8819		Cap Front
		►C	2	5062-3705		Strap Handle
		►C	3	5041-8820		Cap Rear
		►C	4	5062-3848		Cover Side
		►C	7	5062-3736		Cover Top
		►C	8	5041-8802		Trim Top
		►C	9	5021-8407		Frame Front
		►C	10	5041-8801		Foot

GPL: General Parts Listing Section

Parts Information Table (2 of 3)

Change	Page	Note	Reference Designator	HP Part Number	Qty	Description
2 (cont'd)	GPL-5	►C	12	5062-3748		Cover Bottom
		►C	13	5001-0541		Trim Side
	GPL-5					**Measurement Unit**
		►C	1	5041-8819		Cap Front
		►C	2	5062-3705		Strap Handle
		►C	3	5041-8820		Cap Rear
		►C	4	5062-3838		Cover Side
		►C	7	5062-3736		Cover Top
		►C	8	5041-8802		Trim Top
		►C	9	5021-8403		Frame Front
		►C	10	5041-8801		Foot
		►C	12	5062-3748		Cover Bottom
		►C	13	5001-0539		Trim Side
3	A50-3	►C	A50	04195-66555		D/A INTERFACE BD
4	A10-9	►C	A10	04195-66519		REF OSC
		►A	A10	04195-69519		REF OSC (RE-BUILT)
		►C	A10A4	04195-66580		EXT REF LOCK BD
		►C	A10A3	04195-66581		FN LOGIC BD ASSY
		►C	A10C7	0180-3582		C-F 4.7µF 50 V AL
	A10-10	►C	A10C95	0180-3469		C-F 100µF 25 V AL
	A10-11	►D	A10C98			
		►D	A10C128			
		►D	A10C203			
		►D	A10C206			
	A10-12	►D	A10CR16			
		►D	A10CR17			
		►D	A10CR18			
		►D	A10CR19			
		►D	A10CR22			
		►D	A10CR23			
		►D	A10CR24			
		►D	A10CR25			
		►D	A10J3			
	A10-13	►D	A10L33			
		►D	A10L34			
		►D	A10L35			
		►D	A10L36			
		►D	A10L37			
		►D	A10L204			

GPL: General Parts Listing Section

Parts Information Table (3 of 3)

Change	Page	Note	Reference Designator	HP Part Number	Qty	Description
4 (cont'd)	A10-14	►C	A10R50	0757-0277		RES 49.9 1%
		►C	A10R76	0757-0277		RES 49.9 1%
		►D	A10R77			
		►D	A10R78			
	A10-15	►A	A10R300	0698-0082		RES 464 1% .125W
		►D	A10R79			
		►D	A10R80			
		►D	A10R81			
		►D	A10R211			
		►D	A10R212			
		►D	A10R213			
		►D	A10R214			
		►D	A10U9			
	A10-16	►C	1	04195-00632		Case Shield, Comp. side
		►C	2	04195-00633		Case Shield, Comp. side
		►C	3	04195-00634		Case Shield, Comp. side
		►C	4	04195-00635		Case Shield, Comp. side
		►A	1	0515-0914	4	Screw, Flat Head
		►A	2	0515-0914	5	Screw, Flat Head
		►A	3	0515-0914	6	Screw, Flat Head
		►A	4	0515-0914	4	Screw, Flat Head
		►D	3	0515-1550		
	GPL-6	►C		04195-00637		Top Shield Plate
	GPL-9	►D	10	6960-0041		
	GPL-10	►D	3	6960-0041		
	GPL-12	►A	"B" "B"	04195-61605		A18J11 to **J3** (Rear)
		►A	"4" "4"	04195-61606		A18J12 to **J2** (Rear)
		►A	"J" "J"	04195-61607		A10J2 to A18J10 (Included in A10 Assembly)
		►D	"B" "B"	04194-61605		
		►D	"C" "C"	04194-61606		

GPL: General Parts Listing Section

Note:
A: Add
C: Change
D: Deleted

NOTE

LOW NOISE OSCILLATOR SERVICE SHEET

The A18 Low Noise Oscillator board assembly contains two PLLs (Phase locked Loops), and provides the LO (local oscillator signal) to the HP 4195A measurement unit.

CIRCUIT DESCRIPTION:

Figure 1 shows a block diagram of the A18 board assembly. The A18 board consists of a step loop, a sum loop, and a control circuit for these loops.

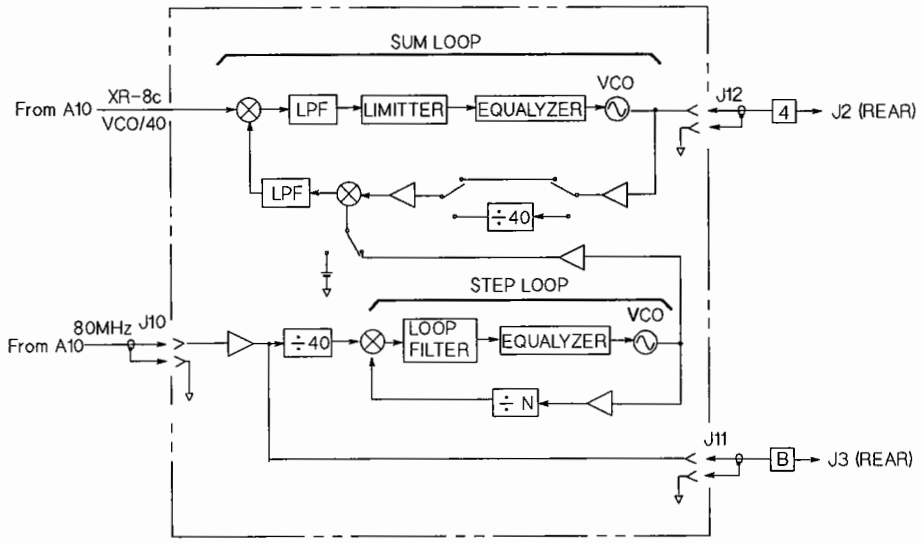

Figure 1. A18 Low Noise Oscillator Block Diagram

The 80 MHz signal from A10 (through A18J10) is amplified and divided to two paths. One signal goes to the rear panel J3 connector (through A18J11). The other signal is divided by 40 (equals to 2 MHz), and is used as the reference frequency for the step loop. The step loop is a PLL circuit which generates 226 MHz to 406 MHz in 2 MHz steps.

The sum loop is a PLL circuit which generates a frequency equal to the sum of the fractional N PLL output frequency (5.833333333 MHz to 10.333333333 MHz, VCO/40 signal) and the step loop output frequency (226 MHz to 406 MHz).

The mixer sums the signals from the sum loop's VCO and the step loop output. The sum frequency of the two signals filtered out by the lowpass filter. The difference frequency of the two signals is passed to the phase detector.

The fractional N PLL output from A10 (VCO/40 signal through A18XR-8c) goes to the phase detector as the reference frequency of the sum loop.

The phase detector outputs the difference frequency component of the lowpass filter output signal and the fractional N PLL output signal (VCO/40 signal).

Then the Sum Loop VCO is controlled so that its output frequency equals the sum of the fractional N PLL output (VCO/40 signal) frequency and the step loop output frequency.

The sum loop operation described above is applicable only when the set SPAN frequency is equal to or narrower than 2.4 MHz.

When the set frequency SPAN is wider than 2.4 MHz, a ÷40 divider is inserted in the sum loop before the mixer, and the step loop output is disabled and a dc voltage is applied to the mixer instead.

The sum loop's VCO output frequency divided by 40 and the fractional N PLL output frequency are compared by the phase detector, so that the VCO output frequency equals to the frequency of the fractional N PLL multiplied by 40.

LOOP FREQUENCIES

CASE 1. CENTER < 150 MHz and SPAN ≤ 2.4 MHz

SUM LOOP (MHz)	RF + 246.666666667
STEP LOOP (MHz)	238 (CENTER: 1 mHz to 416.666667 kHz)
	240 (CENTER: 416.666667 kHz to 2.416666667 MHz)
	242 (CENTER: 2.416666667 MHz to 4.416666667 MHz)
	:
	386 (CENTER: 146.416666667 MHz to 148.416666667 MHz)
	388 (CENTER: 148.416666667 MHz to 149.999999999 MHz)
VCO/40 (MHz)	RF + 246.666666667 - STEP

CASE 2. 150 MHz ≤ CENTER < 320 MHz and SPAN ≤ 2.4 MHz

SUM LOOP (MHz)	RF + 86.666666667
STEP LOOP (MHz)	228 (CENTER: 150 MHz to 150.416666667 MHz)
	230 (CENTER: 150.416666667 MHz to 152.416666667 MHz)
	232 (CENTER: 152.416666667 MHz to 154.416666667 MHz)
	:
	396 (CENTER: 316.416666667 MHz to 318.416666667 MHz)
	398 (CENTER: 318.416666667 MHz to 319.999999999 MHz)
VCO/40 (MHz)	RF + 86.666666667 - STEP

CASE 3. 320 MHz ≤ CENTER and SPAN ≤ 2.4 MHz

SUM LOOP (MHz)	RF - 86.666666667
STEP LOOP (MHz)	226 (CENTER: 320 MHz to 321.75 MHz)
	230 (CENTER: 321.75 MHz to 323.75 MHz)
	232 (CENTER: 323.75 MHz to 325.75 MHz)
	:
	396 (CENTER: 497.75 MHz to 499.75 MHz)
	398 (CENTER: 499.75 MHz to 500 MHz)
VCO/40 (MHz)	RF - 86.666666667 - STEP

NOTE

The SUM LOOP output can be monitored at the control unit's rear panel **J2** connector (LOCAL OUT). The **VCO/40** signal comes from A10 through A18XR-8c.

TROUBLESHOOTING GUIDE

1. 80 MHz INPUT CHECK

1-1. Disconnect the coaxial cable from A18J10.

1-2. Monitor the signal at the disconnected end of the coaxial cable comes from the A10 board, and confirm that its frequency is **80 MHz** and its amplitude is **-9 dBm** ±1 dB. If not, troubleshoot the A10 board.

1-3. Reconnect the coaxial cable to A18J10 and reinstall the A18 board.

2. 80 MHz OUTPUT CHECK

2-1. Monitor the signal at **J3** (80M OUT) on the control unit rear panel, and confirm that its frequency is **80 MHz** and its amplitude is **-8 dBm** ±2 dB. If not, replace the A18 board.

3. SUM LOOP OUTPUT CHECK (Single Loop Mode)

3-1. Extend the A18 board. Turn the HP 4195A on. Set up the HP 4195A as follows:

START	320 MHz
STOP	500 MHz
SWEEP TRIGGER MODE	MANUAL
MANUAL Frequency	320 MHz (use MARKER knob to control)

3-2. Monitor the signal at A18XR-8c using a high impedance (low capacitance) probe, and confirm that its frequency is **5.8333333333 MHz** and its amplitude is **0 dBm** ±2 dB. If is not, troubleshoot the A10 board.

3-3. Monitor the signal at connector **J2** (LOCAL OUT) on the control unit rear panel, and confirm that its frequency is **233.333333333 MHz** and its amplitude is **-8 dBm** ±2 dB. If not, replace the A18 board.

3-4. Change the HP 4195A MANUAL Frequency to 500 MHz using the MARKER knob.

3-5. Monitor the signal at A18XR-8c using a high impedance (low capacitance) probe, and confirm that its frequency is **10.333333333 MHz** and its amplitude is **0 dBm** ±2 dB. If not, troubleshoot the A10 board.

3-6. Monitor the signal at connector **J2** (LOCAL OUT) on the control unit rear panel, and confirm that its frequency is **413.333333333 MHz** and its amplitude is **-8 dBm** ±2 dB. If not, replace the A18 board.

3-7. Reinstall the A18 board in its normal position.

4. **STEP LOOP OPERATION CHECK (Triple Loop Mode)**

4-1. Cycle the HP 4195A off and on. Set up the HP 4195A as follows:

CENTER	320 MHz
SPAN	0 Hz (zero)

4-2. Monitor the signal at connector **J2** (LOCAL OUT) on the control unit rear panel, and confirm that its frequency is **233.333333333 MHz** and its amplitude is **-8 dBm** ±2 dB. If is not, replace the A18 board.

4-3. Change the CENTER frequency to 500 MHz.

4-4. Monitor the signal at connector **J2** (LOCAL OUT) on the control unit rear panel, and confirm that its frequency is **413.333333333 MHz** and its amplitude is **-8 dBm** ±2 dB. If not, replace the A18 board.

PARTS INFORMATION

Table 1. A18 Replaceable Parts

Reference Designator	HP Part Number	Description
A18	04195-66518	LOW NOISE OSC
	04195-69518	LOW NOISE OSC (RE-BUILT)
1	04195-00624	CASE SHIELD (Component Side)
	04195-00628	CASE SHIELD (Circuit Side)
2	04195-00625	CASE SHIELD (Component Side)
	04195-00629	CASE SHIELD (Circuit Side)
3	04195-00626	CASE SHIELD (Component Side)
	04195-00630	CASE SHIELD (Circuit Side)
4	04195-00627	CASE SHIELD (Component Side)
	04195-00631	CASE SHIELD (Circuit Side)

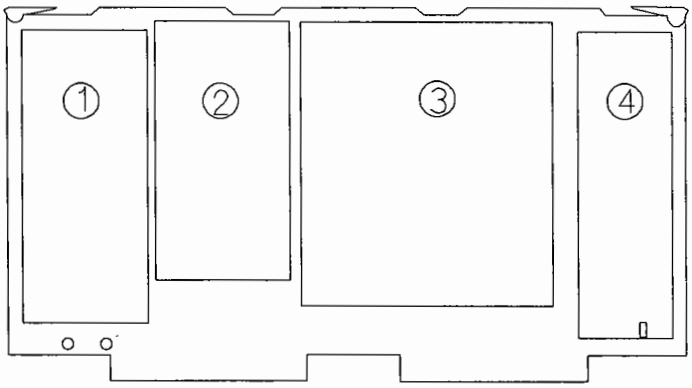

Figure 1. A18 Shield Cases