HAMEG Instruments

Low Distortion Generator HM8037-2

Service-Manual

Hersteller / Manufacturer / Fabricant

HAMEG Instruments GmbH
Industriestraße 6
D-63533 Mainhausen

KONFORMITÄTSERKLÄRUNG
DECLARATION OF CONFORMITY
DECLARATION DE CONFORMITE

Die HAMEG Instruments GmbH bescheinigt die Konformität für das Produkt
The HAMEG Instruments GmbH herewith declares conformity of the product
HAMEG Instruments GmbH déclare la conformite du produit

Bezeichnung / Product name / Designation:
Klirrarmer Sinus-Generator
Low Distrotion Generator
Générateur sinusoïdales à faible distorsion

Typ / Type / Type: **HM8037-2**

mit / with / avec: **HM8001/2**

Optionen / Options / Options: **–**

mit den folgenden Bestimmungen / with applicable regulations / avec les directives suivantes

EMV Richtlinie 89/336/EWG ergänzt durch 91/263/EWG, 92/31/EWG
EMC Directive 89/336/EEC amended by 91/263/EWG, 92/31/EEC
Directive EMC 89/336/CEE amendée par 91/263/EWG, 92/31/CEE

Niederspannungsrichtlinie 73/23/EWG ergänzt durch 93/68/EWG
Low-Voltage Equipment Directive 73/23/EEC amended by 93/68/EEC
Directive des equipements basse tension 73/23/CEE amendée par 93/68/CEE

Angewendete harmonisierte Normen / Harmonized standards applied / Normes harmonisées utilisées

Sicherheit / Safety / Sécurité
EN 61010-1: 1993 / IEC (CEI) 1010-1: 1990 A 1: 1992 / VDE 0411: 1994
EN 61010-1/A2: 1995 / IEC 1010-1/A2: 1995 / VDE 0411 Teil 1/A1: 1996-05
Überspannungskategorie / Overvoltage category / Catégorie de surtension: II
Verschmutzungsgrad / Degree of pollution / Degré de pollution: 2

Elektromagnetische Verträglichkeit / Electromagnetic compatibility / Compatibilité électromagnétique

EN 61326-1/A1
Störaussendung / Radiation / Emission: Tabelle / table / tableau 4, Klasse / Class / Classe B. Störfestigkeit / Immunity / Imunitee: Tabelle / table / tableau A1.

EN 61000-3-2/A14
Oberschwingungsströme / Harmonic current emissions / Émissions de courant harmonique: Klasse / Class / Classe D.

EN 61000-3-3
Spannungsschwankungen u. Flicker / Voltage fluctuations and flicker / Fluctuations de tension et du flicker.

Datum/Date/Date
15.01.2001

Unterschrift / Signature / Signatur

Manuel Roth
Manager

General information regarding the CE marking

HAMEG instruments fulfill the regulations of the EMC directive. The conformity test made by HAMEG is based on the actual generic- and product standards. In cases where different limit values are applicable, HAMEG applies the severer standard. For emission the limits for residential, commercial and light industry are applied. Regarding the immunity (susceptibility) the limits for industrial environment have been used.

The measuring- and data lines of the instrument have much influence on emmission and immunity and therefore on meeting the acceptance limits. For different applications the lines and/or cables used may be different. For measurement operation the following hints and conditions regarding emission and immunity should be observed:

1. Data cables
For the connection between instruments resp. their interfaces and external devices, (computer, printer etc.) sufficiently screened cables must be used. Without a special instruction in the manual for a reduced cable length, the maximum cable length of a dataline must be less than 3 meters and not be used outside buildings. If an interface has several connectors only one connector must have a connection to a cable.
Basically interconnections must have a double screening. For IEEE-bus purposes the double screened cables HZ72S and HZ72L from HAMEG are suitable.

2. Signal cables
Basically test leads for signal interconnection between test point and instrument should be as short as possible. Without instruction in the manual for a shorter length, signal lines must be less than 3 meters and not be used outside buildings.
Signal lines must screened (coaxial cable - RG58/U). A proper ground connection is required. In combination with signal generators double screened cables (RG223/U, RG214/U) must be used.

3. Influence on measuring instruments.
Under the presence of strong high frequency electric or magnetic fields, even with careful setup of the measuring equipment an influence of such signals is unavoidable.
This will not cause damage or put the instrument out of operation. Small deviations of the measuring value (reading) exceeding the instruments specifications may result from such conditions in individual cases.

HAMEG Instruments GmbH

50 kHz Low-Distortion Sine Wave Generator
HM8037

Frequency range 5 Hz to 50 kHz

A complete measurement system for AF measurement equipment in combination with the HM8027

3-digit digital frequency display

High amplitude stability

Distortion factor ‹ 0.01 % (20 Hz-10 kHz)

Output voltage 1.5 V_{rms} into 600 Ω

Mainframe HM8001-2 required for operation

Mainframe HM8001-2

HZ33, HZ34
Test cable BNC/BNC

Distortion Meter HM8027

50 kHz Low-Distortion Sine Wave Generator HM8037

Valid at 23 °C after a 30 minute warm-up period

Operating modes

Sine wave, continuous, amplitude-regulated

Frequency range:

5 Hz bis 50 kHz, 4 ranges
variable control 10:1, overlapping ranges

Frequency drift

(Frequency control in center position)

15 min.	0.08 %	(50 kHz range)
8 hrs.	0.6 %	(50 kHz range)
15 min.	0.08 %	(in all other ranges)
8 hrs.	0.5 %	(in all other ranges)

Frequency display

3-digit, 7-segment LED display

Display accuracy:	±1 digit

Distortion factor

5 Hz - 20 Hz:	max. 0.03 %
20 Hz -10 kHz:	max. 0.01 %
1 kHz:	typ. 0.005 %
10 kHz - 20 kHz:	max. 0.03 %
20 kHz - 50 kHz:	max. 0.05 %

Signal output (short-circuit proof)

Output voltage:	1.5 V into 600 Ω
Internal resistance:	approx. 600 Ω
Amplitude flatness:	max. ±0.2dB (5 Hz to 50 kHz)
Attenuation:	min. 60 dB 2 fixed attenuators: each 20 dB ± 0.2 dB
variable control:	0 dB to 20 dB
Amplitude stability:	0.12 % (4 hrs.)

Synchronous output (short-circuit proof)

Output voltage:	2 V_{pp}, sine wave
Internal resistance:	ca. 1 kΩ

Miscellaneous

The outputs can be isolated from the case ground by pressing a key.

Power supply (from mainframe):	+5 V/120 mA +15 V/30 mA –15 V/30 mA (∑ = 6.3 W)
Operating temperature:	+10° C to +40° C
Max. relative humidity:	80 % (without condensation)
Dimensions (W x H x D) (without 22-pole flat plug):	135 x 68 x 228 mm
Weight:	approx. 0.65 kg

Accessories supplied: Operator's Manual
Optional accessories: HZ33/34 BNC Test Cable; HZ22 50 Ω feed-through termination; HZ10 Silicone test leads

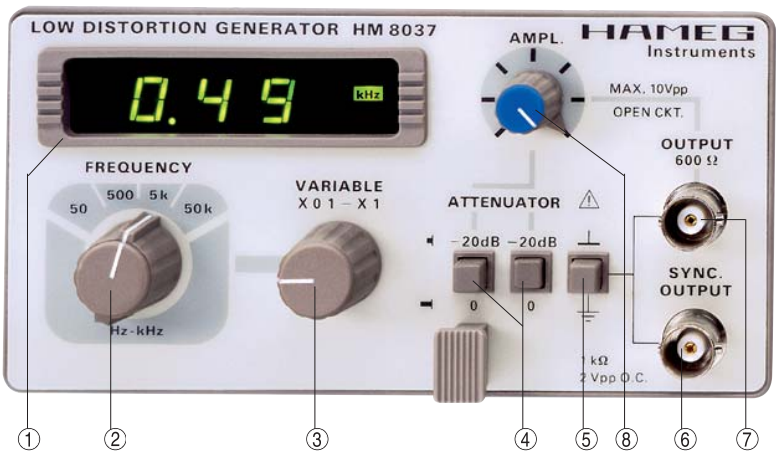

Control elements

① **DISPLAY** (7-segment LED + LED)
3-digit frequency meter. Accuracy ±1 digit. LED indicators for Hz and kHz.

② **FREQUENCY** (4-position rotary switch)
Frequency coarse adjustment from 5 Hz to 50 kHz in 4 decade steps.

③ **VARIABLE** (adjusting knob)
Continous frequency adjustment.
Overlapping the ranges selected with ②. Setting range is from x0,1 to x1 of selected range.

④ **–20 dB Attenuators** (pushbuttons)
Two fixed attenuators of –20 dB. They can be used separately. When all buttons are pressed, a total attenuation of –40 dB is obtained. Including the amplitude control ⑧, the max. attenuation amounts to –60 dB (factor: 1000).

⑤ **GROUND** (pushbutton)
When pressing, signal ground and chassis (earth) are not connected together; when released, signal ground and chassis are connected with each other.

⑥ **SYNCHRONIZING OUTPUT**
(BNC connector)
Short-circuit-proof trigger signal output of same phase and amplitude as ⑦. Output amplitude is 2 V_{pp} open circuit. Output impedance is 1 kΩ.

⑦ **600Ω OUTPUT** (BNC connector)
Short-circuit-proof signal output of generator. Output impedance 600Ω.

⑧ **AMPLITUDE** (adjusting knob)
Continous adjustment of output amplitude from 0dB to –20 dB when output ⑦ is terminated with 600Ω.

Adjustment

1 **ADJUSTMENT OF VREG (CONTROL LOOP ERROR VOLTAGE)**

a) Connect a DC multimeter (10V range) or an oscilloscope between REG and GND (CN6 connector).

b) Switch to 50 kHz frequency range.
Adjust the frequency control in order to have 50.0 kHz.

c) Switch to 500 Hz frequency range.
Note the voltage between REG and GND.

d) Switch to 50 kHz frequency range.
Adjust VC1 in order to have the same potential measured in step 3).

e) Repeat step 2 to 4.

2 **ADJUSTMENT OF OUTPUT VOLTAGE**

a) Adjust AMP control for maximum signal.

b) Adjust VARIABLE control for minimum frequency, 5 kHz range.

c) Connect an AC multimeter to OUTPUT 600Ω.

d) Adjust RV3 to get 3.250 V_{rms}.

3) **VERIFICATIONS**

a) Set the instrument to 5 kHz range.

b) Connect an oscilloscope to the OUTPUT 600Ω.

c) Check the signal stability for all frequencies.

d) Check the presence of a sine signal.

e) Check the isolation of the BNC from the earth.

Calibration

VISUAL CONTROL
Font panel, buttons

ELECTRICAL CONTROL

a) OUTPUT AMPLITUDE:
- Connect the multimeter (HM8012, 50 V_{AC}) to the OUTPUT 600Ω
- Select 5 kHz frequency range, VARIABLE control to the left, AMPL. control to the right
- Output voltage must be between 3.100 and 3.300 V_{rms}
- Set AMPL. Control to the left. Output voltage must be below 0.320 V_{rms}
- Connect the multimeter to the SYNC OUTPUT. Reading voltage must be between 0.6 and 0.750 V_{rms}

b) FREQUENCY LIMITS
- Select 50 kHz frequency range
- VARIABLE control to the left: frequency readings below 4.9
- VARIABLE control to the right: frequency readings above 50.5

c) DISTORSION LEVELS (with KROHN HITE)
- Check the VARIABLE control linearity. AMPL. Control to the right, 5 kHz range

VARIABLE	KROHN-HITE	MAX (%)	TYPICAL (%)
1.00 kHz	1-10 kHz range		
1.20 kHz			
1.40 kHz			
1.60 kHz			
1.80 kHz		0.01	0.003
2.00 kHz			
2.20 kHz			
2.40 kHz			
2.60 kHz			
2.80 kHz			

HM8037 RANGE	KROHN HITE RANGE	Variable	Max. (%)	TYPICAL (%)
50 Hz	10 - 100	20 Hz		
500 Hz	10-100	left		
500 Hz	100 - 1k	100 Hz	0.01	0.003
50 kHz	100 - 1k	left		
50 kHz	10 - 110k	10 kHz		
50 kHz	10 - 110k	20 kHz	0.03	0.0035
50 kHz	10- 110k	right	0.05	0.015

OUTPUT ATTENUATORS CHECK
- Connect a 600Ω load and an oscilloscope to the OUTPUT 600Ω
- Adjust the oscilloscope in order to have a 6 divisions amplitude signal
- Check that the amplitude is stable on all frequency ranges, for all positions of the VARIABLE control potentiometer.
- Turn slowly the AMPL. control from right to left. The signal must be a sine signal without visual distorsion
- Set the AMPL. control to the right. Push the first 20 dB button. Set the oscilloscope for 10 X sensitivity. The signal must have 6 divisions amplitude.
- Push the second 20 dB button and release the first one. The amplitude of the signal must be the same.
- Check the presence of the SYNC signal.

ISOLATION KEY CHECKING
Check the isolation between ground and earth with a component tester

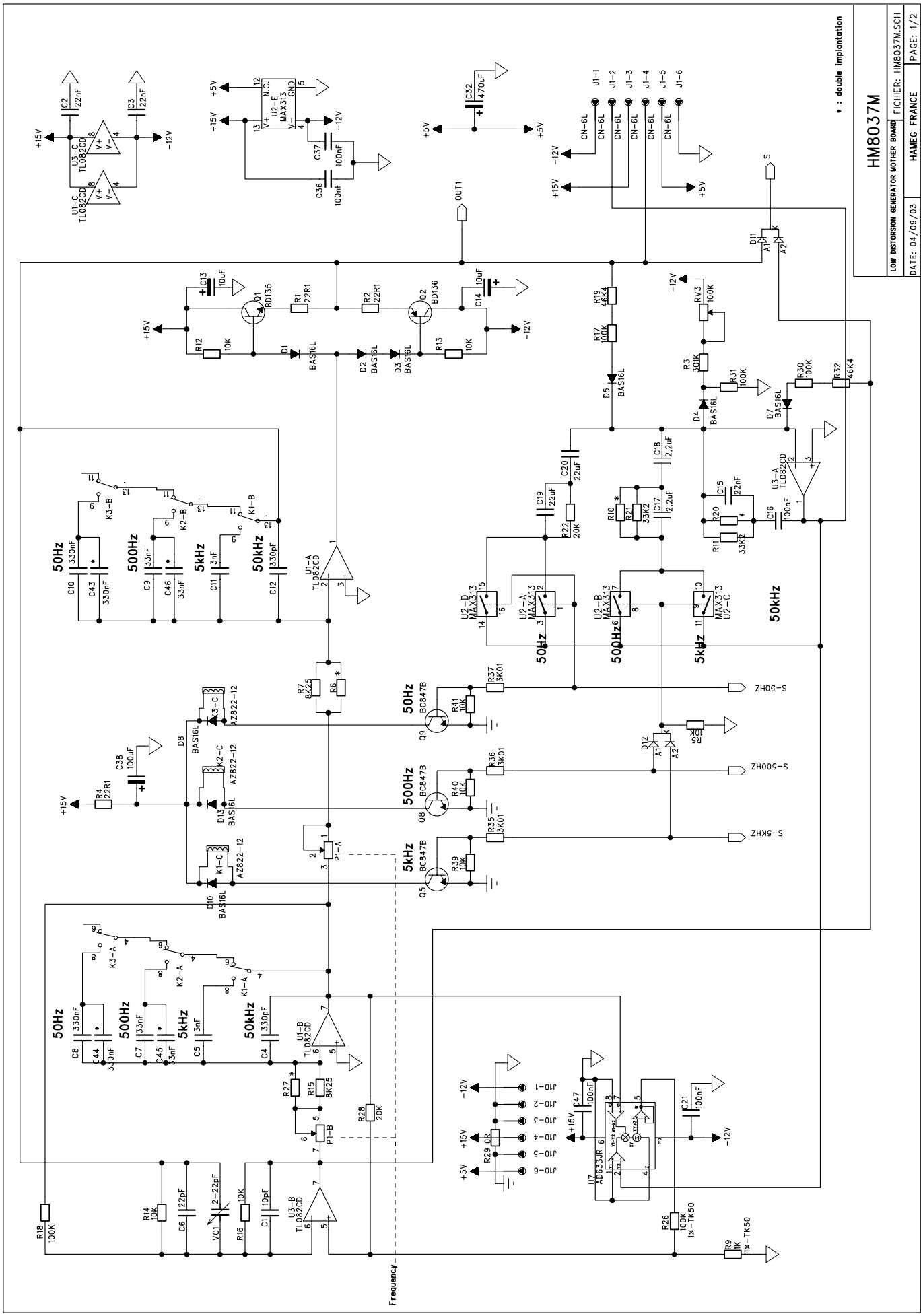

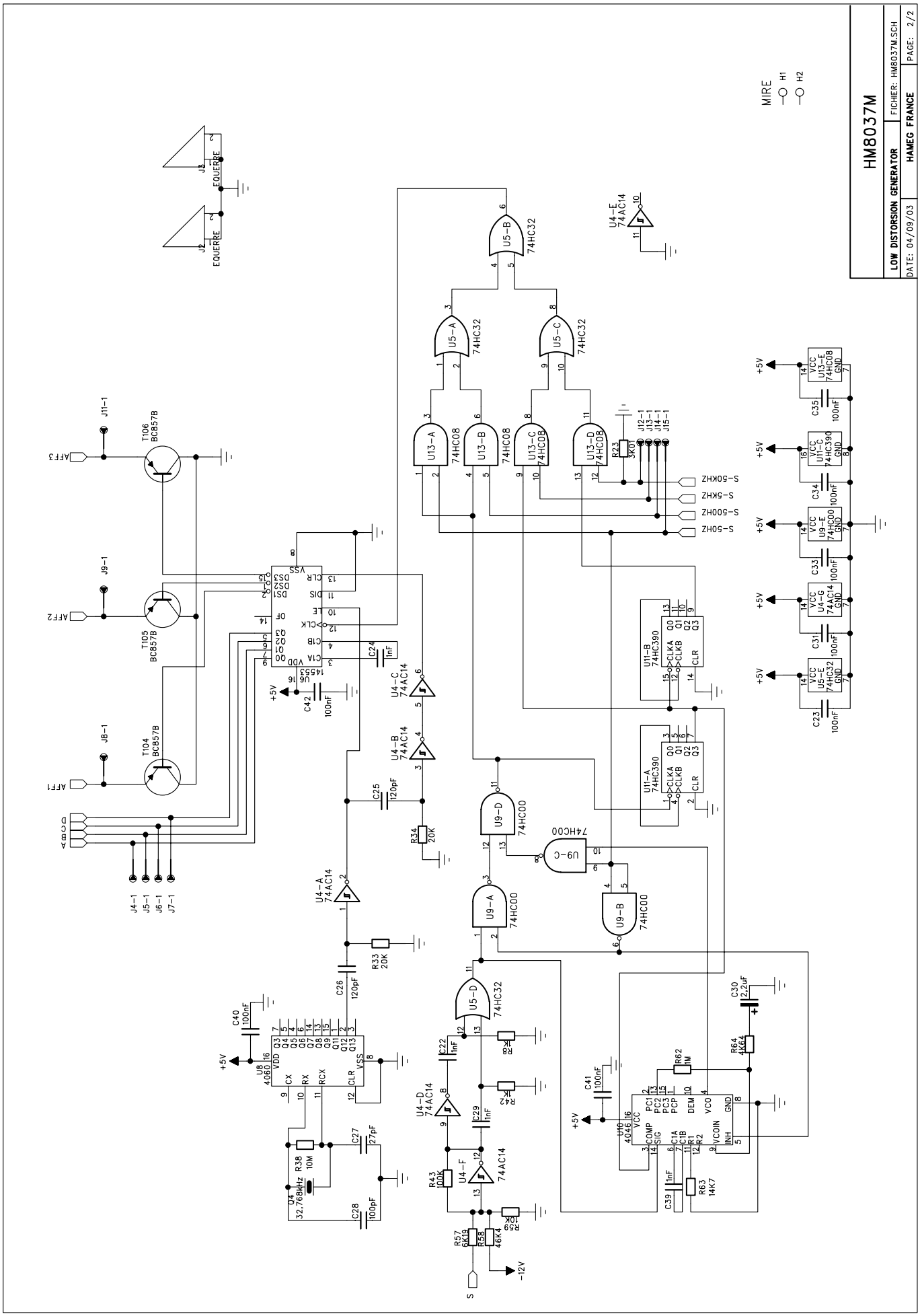
HM8037M
LOW DISTORSION GENERATOR
HAMEG FRANCE
FICHIER: HM8037M.SCH
DATE: 04/09/03
PAGE: 2/2
MIRE
H1
H2
EQUERRE
EQUERRE
U5-B 74HC32
U5-A 74HC32
U5-C 74HC32
U4-E 74AC14
U13-A 74HC08
U13-B 74HC08
U13-C 74HC08
U13-D 74HC08
R23 3K01
J12-1
J13-1
J14-1
J15-1
S-50KHZ
S-5KHZ
S-500HZ
S-50HZ
T106 BC857B
T105 BC857B
T104 BC857B
AFF3
AFF2
AFF1
J11-1
J9-1
J8-1
J4-1
J5-1
J6-1
J7-1
U6 14553
C24 1nF
C42 100nF
U4-C 74AC14
U4-B 74AC14
C25 120pF
R34 20K
U4-A 74AC14
R33 20K
C26 120pF
U9-D 74HC00
U9-C 74HC00
U9-A 74HC00
U9-B 74HC00
U11-B 74HC390
U11-A 74HC390
U13-E 74HC08
U11-C 74HC390
U9-E 74HC00
U4-G 74AC14
U5-E 74HC32
C35 100nF
C34 100nF
C33 100nF
C31 100nF
C23 100nF
U8 4060
C40 100nF
U4 32,768kHz
R38 10M
C27 27pF
C28 100pF
U5-D 74HC32
C22 1nF
C29 1nF
U4-D 74AC14
U4-F 74AC14
R43 100K
R57 6K19
R58 46K4
R59 10K
C41 100nF
U10 4046
R62 1M
R63 14K7
C39 1nF
C30 2,2uF
R64 4K64
S
-12V
+5V

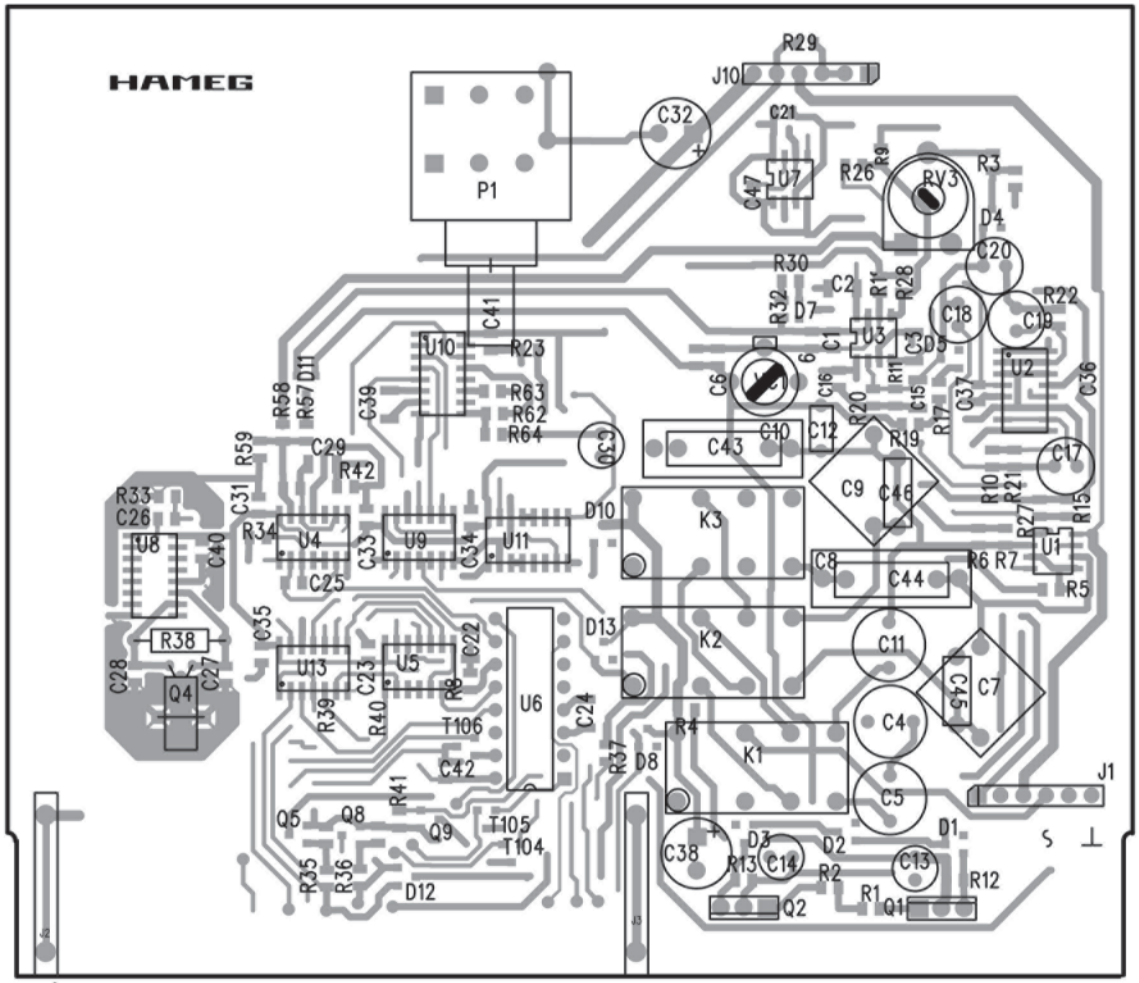
HAMEG
P1
J10
R29
C32
C21
C47
U7
R26
R9
RV3
R3
D4
C20
R30
C2
R1
R28
R32
D7
C18
C19
R22
C1
U3
C3
D5
U2
C36
C6
C16
R11
C15
R17
C37
U10
R23
R63
R62
R64
C41
R58
R57
D11
C39
C30
C43
C10
C12
R20
R19
C9
C46
C17
R59
C29
R42
R33
C26
C31
R34
U4
C33
U9
C34
U11
D10
K3
C8
C44
R6
R7
U1
R10
R21
R27
R15
R5
C40
U8
C25
R38
C35
C22
D13
K2
C11
C7
C45
C28
Q4
C27
U13
C23
U5
R8
U6
C24
R39
R40
T106
R4
K1
C4
R37
D8
C42
R41
C5
J1
Q5
Q8
Q9
T105
T104
C38
D3
R13
C14
D2
R2
C13
D1
R12
R35
R36
D12
R1
Q1
Q2
S
⊥

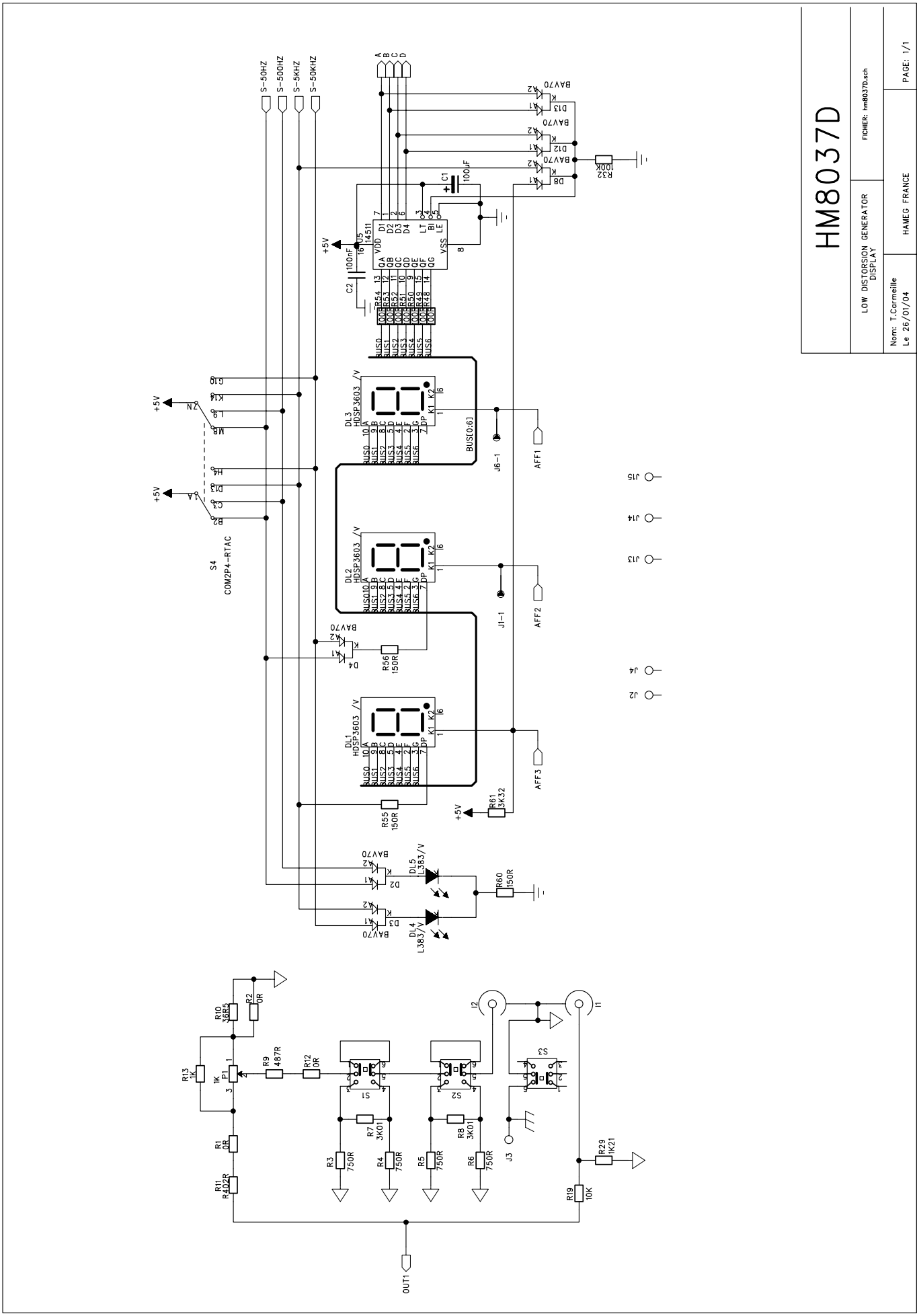
HM8037D
LOW DISTORSION GENERATOR
DISPLAY
FICHER: hm8037D.sch
PAGE: 1/1
Nom: T.Carmeille
Le 26/01/04
HAMEG FRANCE
S-50HZ
S-500HZ
S-5KHZ
S-50KHZ
A
B
C
D
BAV70
D13
D12
D8
R32
100K
C1
100µF
U5
14511
VDD
VSS
LE
LT
BI
D1
D2
D3
D4
Q4
QB
QC
QD
QE
QF
QG
C2
100nF
+5V
R54
R53
R52
R51
R50
R49
R48
BUS0
BUS1
BUS2
BUS3
BUS4
BUS5
BUS6
DL3
HDSP3603
DL2
HDSP3603
DL1
HDSP3603
BUS[0.6]
J6-1
J1-1
AFF1
AFF2
AFF3
S4
COM2P4-RTAC
G10
K10
L9
M8
H4
D13
C2
B2
1A
2N
D4
D3
D2
R56
150R
R55
150R
R61
3K32
DL5
L383/V
DL4
L383/V
R60
150R
J15
J14
J13
J4
J2
R10
36R5
R2
0R
R13
1K
P1
1K
R9
487R
R12
0R
S1
S2
S3
R7
3K01
R8
3K01
R3
750R
R4
750R
R5
750R
R6
750R
R1
0R
R11
R102R
I2
I1
J3
R29
1K21
R19
10K
OUT1

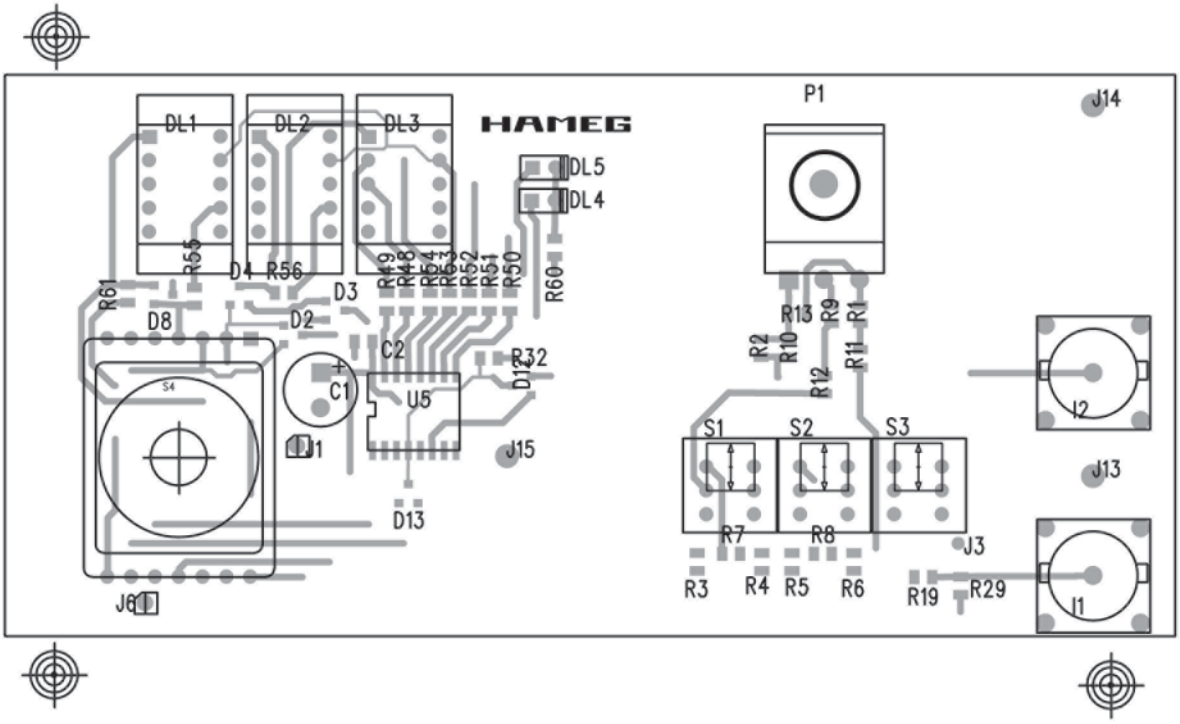
DL1
DL2
DL3
HAMEG
DL5
DL4
P1
J14
R55
D4
R56
R61
D8
D3
D2
R49
R48
R54
R53
R52
R51
R50
R60
C2
R32
D12
C1
U5
J1
J15
D13
J6
R13
R9
R1
R2
R10
R11
R12
S1
S2
S3
J2
J13
R7
R8
J3
R3
R4
R5
R6
R19
R29
J1

HAMEG Instruments

Oscilloscopes

Spectrum Analyzer

Power Supplies

Modular System
8000 Series

Programmable Instruments
8100 Series

authorized dealer

4S-8037-02E0

www.hameg.de

Subject to change without notice
4S-8037-02E0 / 04-11-2005-gw

DQS-Certification: DIN EN ISO 9001:2000
Reg.-Nr.: 071040 QM

HAMEG Instruments GmbH
Industriestraße 6
D-63533 Mainhausen
Tel +49 (0) 61 82 800-0
Fax +49 (0) 61 82 800-100
sales@hameg.de