Marconi
Instruments

560MHz DIGITAL FREQUENCY METER

TF 2432

Instruction Manual

EQUIPMENT	TF 2432
TITLE	500 MHz Digital Frequency Meter
CODE NOS.	52432-301T & -302P
SER. NOS.	Within series prefixed J 186772 and above
ACCOMPANYING DOCUMENTS	None

For use with manual issue 1a - 12/76, 1b - 10/77 and 1c - 6/78.

MANUAL CHANGE

Unit A11

(Parts list, p.27
Circuit diagram, p.37)

	MI code
Change R6 to Met film 360Ω 2% ¼W	24773-262T
and TR3 to BC171A	28455-421X

H 52432-900H
Change No. C3

For use with manual issue ... 1a-12/76 and 1b - 10/77

EQUIPMENT ... TF 2432

TITLE ..... 500 MHz Digital Frequency Meter

CODE NOS. .... 52432-301T & -302P

SER. NOS. ..... Within series prefixed J 186748 and above

ACCOMPANYING DOCUMENTS ... None

MANUAL CHANGE

Unit A1

(Parts list, p. 20
Circuit diagram, p.31)

		MI code
Change	C19 to Cer .001μF -20 +80% 500V	26383-242P

EQUIPMENT... TF 2432

TITLE..... 560 MHz Digital Frequency Meter

CODE No..... 52342-301T,-302P

SER.NOS.
PREFIXED.... 186776 onwards

ACCOMPANYING
DOCUMENTS... None

MANUAL CHANGE

Input filter

A filter which gives inproved noise immunity for low frequency measurements has been added to the input circuit of the counter. The filter is formed by the existing components R1 and C2. Input coupling capacitor C1 has been taken from its existing position between l.f. input connector SKA and the junction of R1 and C2 and inserted between the opposite end of the R1 C2 network and the junction of D1 and D2 etc. Switch SH has been added and is mounted on the front panel to the right of the l.f. input socket. When the filter is switched OUT, R1 and C2 are connected in parallel. When the filter is switched to IN, C2 is disconnected from the input end of R1 and earthed so that it forms the shunt element of a low-pass filter with R1 as the series input element. The filter provides approximately 20 dB of attenuation at 100 kHz.

Amendments to manual

Chap. 1

Page 4 : Add the following:

LF FILTER	Switchable low-pass filter reduces sensitivity above 10 kHz to improve noise immunity when counting l.f. signals. (Attenuation at least 20 dB above 100 kHz.)

Chap. 6

Page 24 : Add: SH LF FILTER s.p.d.t. 23462-252Z

Chap. 7

Fig. 7.2 : Function board A1

Amend the diagram to incorporate the l.f. filter switch and associated components as shown on the following diagram.

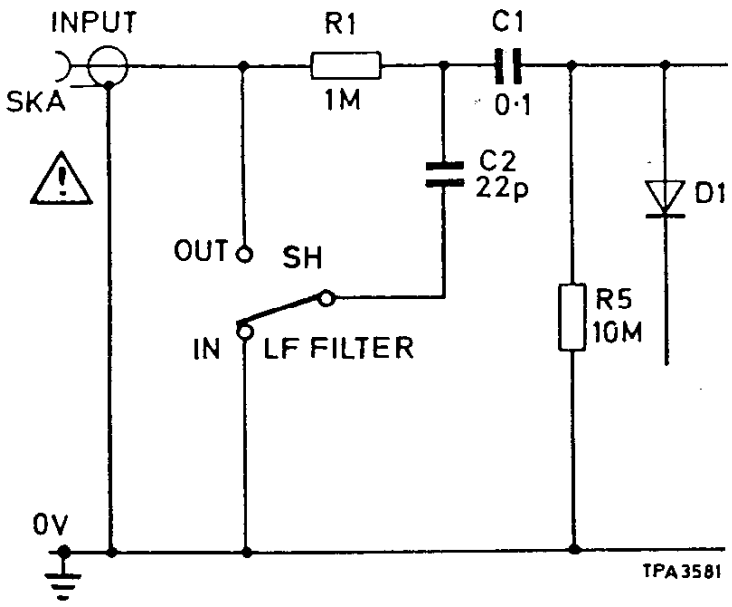

MARCONI INSTRUMENTS LIMITED
ST. ALBANS HERTFORDSHIRE ENGLAND.

SAFETY PRECAUTIONS

- For inclusion in instruction manuals for mains operated equipment -

This equipment is protected in accordance with IEC Safety Class 1. It has been designed and tested according to IEC Publication 348, 'Safety Requirements for Electronic Measuring Apparatus', and has been supplied in a safe condition. The following precautions must be observed by the user to ensure safe operation and to retain the equipment in a safe condition.

Defects and abnormal stresses

Whenever it is likely that protection has been impaired, for example as a result of damage caused by severe conditions of transport or storage, the equipment shall be made inoperative and be secured against any unintended operation.

Removal of covers

Removal of the covers is likely to expose live parts although reasonable precautions have been taken in the design of the equipment to shield such parts. The equipment shall be disconnected from the supply before carrying out any adjustment, replacement or maintenance and repair during which the equipment shall be opened. If any adjustment, maintenance or repair under voltage is inevitable it shall only be carried out by a skilled person who is aware of the hazard involved.

Note that capacitors inside the equipment may still be charged when the equipment has been disconnected from the supply. Before carrying out any work inside the equipment, capacitors connected to high voltage points should be discharged; to discharge mains filter capacitors, if fitted, set the equipment supply switch to ON.

Mains plug

The mains plug shall only be inserted in a socket outlet provided with a protective earth contact. The protective action shall not be negated by the use of an extension lead without protective conductor. Any interruption of the protective conductor inside or outside the equipment is likely to make the equipment dangerous.

Fuses

Note that the supply fuse is connected in series with the brown (live) wire of the supply lead. If the equipment is connected to the supply via a two-pin plug, it will be possible for the fuse to become connected to the neutral side depending upon the orientation of the plug in its socket. In these circumstances certain parts of the instrument could remain at supply potential even after the fuse has ruptured.

To provide protection against breakdown of the supply lead, its connectors, and filter where fitted, an external supply fuse (e.g. fitted in the connecting plug) should be used in the live lead. The fuse should have a continuous rating not exceeding 6 A.

Make sure that only fuses with the required rated current and of the specified type are used for replacement. The use of mended fuses and the short-circuiting of fuse holders shall be avoided.

Instruction Manual
No. H 52432-900H
for

560 MHz Digital Frequency Meter

TF 2432

Code Nos. 52432-301T and 52432-302P

RADIO FREQUENCY INTERFERENCE

This equipment conforms with the requirements of EEC Directive 76/889 as to limits of r.f. interference.

H 54881-030D:C1

MARCONI INSTRUMENTS LIMITED
ST. ALBANS HERTFORDSHIRE ENGLAND

M.I. 2c
4/78/E

H 52432-900H
1c - 4/78

Contents

Chapter I

General information

1.1 INTRODUCTION

TF 2432 is a general purpose instrument suitable for measuring the frequency of signals in the band 10 Hz to 560 MHz. Its versatile input buffer and amplifier incorporating a.g.c. has a high tolerance of signal distortion and noise and ensures reliable operation over a wide dynamic range of input levels without the need for a manual control.

The counter has a bright 8-digit, 7-segment l.e.d. display with memory, automatic position of decimal point, leading zero suppression and active indication of overflow, hold and external standard operation. Push button switches select the resolution required, the maximum being 0.1 Hz over the entire frequency range.

Gate times are derived from an internal 10 MHz crystal oscillator or from an external standard if required. The high-stability alternative version of the instrument Code No. 52432-302P is fitted with an oven-controlled internal 10 MHz standard.

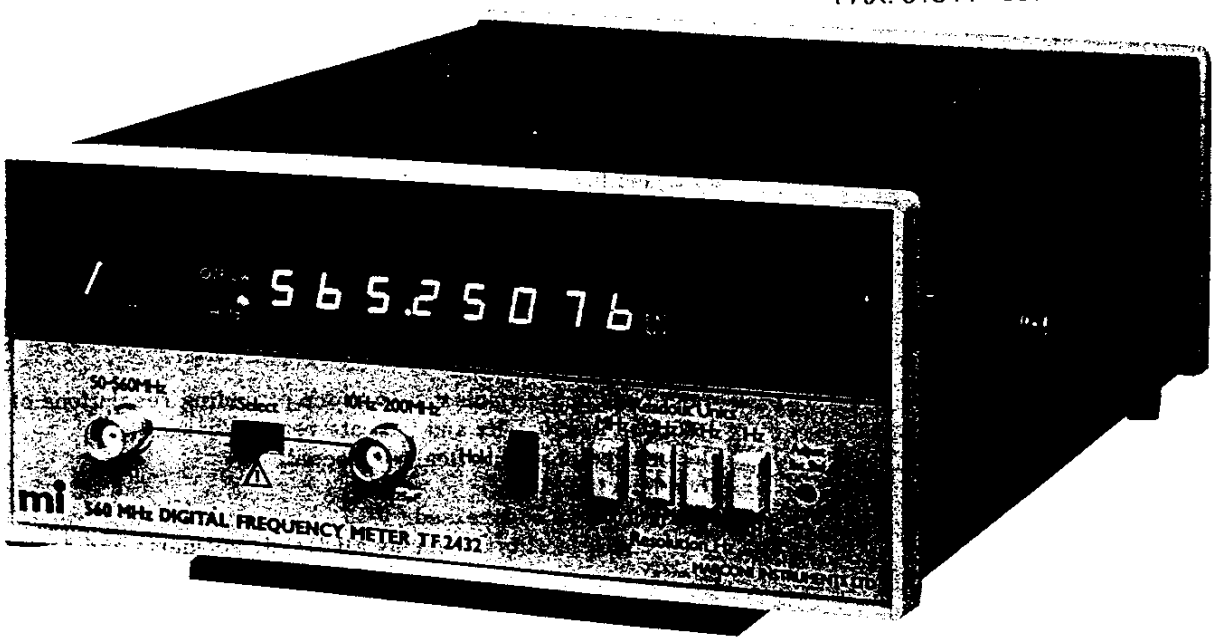

Fig. 1.1 560 MHz Digital Frequency Meter TF 2432

1.2 DATA SUMMARY

INPUT CHANNELS : Switch selected l.f. and h.f. input channels cover a total frequency range of 10 Hz to 560 MHz.

LF INPUT

Frequency range : 10 Hz to 200 MHz.

Sensitivity* : 10 mV r.m.s. sine wave from 10 Hz to 70 MHz.
25 mV r.m.s. sine wave from 70 MHz to 200 MHz.
Built-in a.g.c. provides capability for handling signals over a dynamic range of up to 90 dB automatically.

Maximum input : 260 V r.m.s. at 50 Hz nominal (sine wave),
5 V r.m.s. at 200 MHz (sine wave).
Maximum d.c. : 250 V.
Maximum a.c. + d.c. : 250 V r.m.s. at nominal 50 Hz, decreasing from 50 Hz to 200 MHz by approx. 1.3×10^{-6} V/Hz.

Input impedance : Approx. 1 MΩ in parallel with less than 25 pF. AC coupled via 0.1 μF.

HF INPUT

Frequency range : 50 MHz to 560 MHz.

Sensitivity* : 10 mV r.m.s. sine wave.
Built-in a.g.c. provides capability for handling signals over a dynamic range of up to 54 dB automatically.

Maximum input : 5 V r.m.s. from 50 MHz to 560 MHz.
Maximum d.c. : 5 V.

Input impedance : 50 Ω nominal.

DISPLAY : 8 digits with memory. (7 segment l.e.d's of 7 mm minimum height).

Units and resolution : Four push buttons select gate times providing resolutions of 100, 10, 1 or 0.1 Hz and indicate readout units.
Decimal point automatically selected.
Overflow indication.
Leading zeros suppressed.
Digit check facility to display all l.e.d. segments and decimal points.

Display time : Readout retained during gating period or held indefinitely by means of HOLD button.

* Sensitivity is specified in terms of p.d. measured at the input socket.

ACCURACY : ±1 count ± stability of frequency standard.

FREQUENCY STANDARD : Internal crystal oscillator or external standard automatically selected. (Application of external signal overrides internal oscillator.) Front panel indication when external standard is selected.

INTERNAL CRYSTAL OSCILLATOR (Version 52432-301T)

Frequency : 10 MHz.

Adjustment range : Compensation for ageing drift may be made by a front panel preset.

Temperature stability : Within ±5 parts in 10^6 over the operating temperature range of the instrument.

Ageing rate : Approx. ±2 parts in 10^9 per day at a constant temperature.

Auxiliary output level : Internal standard available at rear panel at approx. 2 kΩ source impedance. Greater than 130 mV p-p into 50 Ω.

INTERNAL CRYSTAL OSCILLATOR (Version 52432-302P)

Frequency : 10 MHz.

Adjustment range : Compensation for ageing drift may be made by a front panel preset.

Temperature stability : Within ±1 part in 10^7 over the operating temperature range of the instrument.

Ageing rate : ±1 part in 10^7 nominal per week after 1 month continuous use.

Warm-up time : Stabilizes to within ±1 part in 10^6 of final value in 5 minutes from switch-on at ambient temperatures above +20 °C.

Auxiliary output level : Internal standard available at rear panel at approx. 2 kΩ source impedance. Greater than 130 mV p-p into 50 Ω.

EXTERNAL INPUT

Frequency : Rear panel switch selects 100 kHz or 1 MHz input for frequency measurement. Useable from 10 kHz to 10 MHz for ratio measurement.

Input impedance : Approx. 1 MΩ in parallel with less than 25 pF.

OPERATING TEMPERATURE RANGE : 0 to 40 °C.

POWER REQUIREMENTS

AC mains :	95 to 130 V (115 V nominal), 190 to 264 V (230 V nominal).
Frequency :	45 to 500 Hz.
Consumption :	15 VA approx.

DIMENSIONS AND WEIGHT :	Height	Width	Depth	Weight
	100 mm (4 in)	220 mm (8 3/4 in)	310 mm (12 in)	2.2 kg (4 3/4 lb)

1.3 VERSIONS AND ACCESSORIES

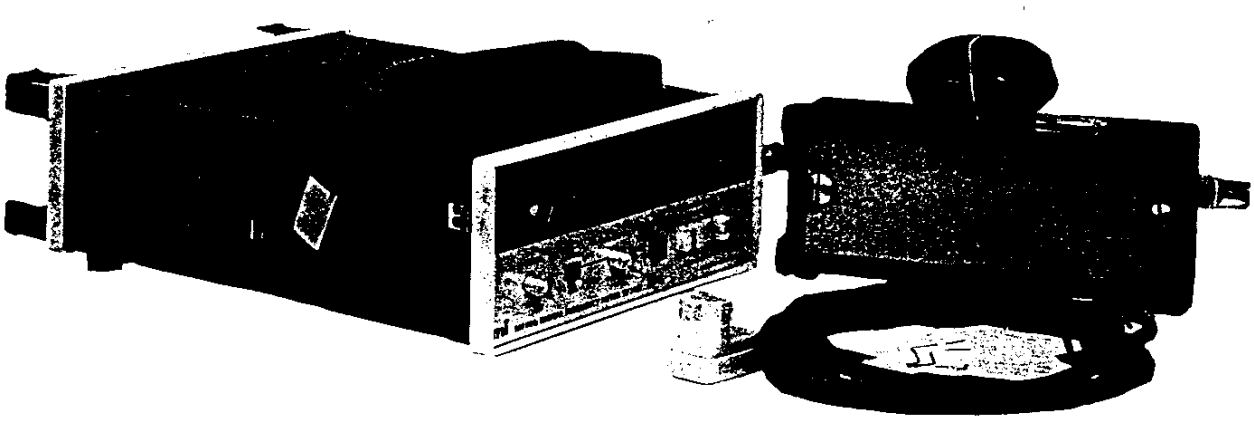

Fig. 1.2 Instrument complete with accessory kit

Versions	MI code
Standard version	52432-301T
Alternative version with stability internal frequency standard	52432-302P

Supplied accessories

Mains lead (detachable)	43123-076Y

Optional accessories	MI code
Accessory kit comprising :- Stowage lid, Rear stand, Hand strap, Shoulder strap, Right angle entry mains lead	46883-281N
Rack mounting tray	46883-282L
Coaxial lead, 1 m long, with BNC plug at each end	43126-013W

2.1 INSTALLATION

The instrument is supplied ready for bench mounting but a rack mounting tray is available as an accessory. This consists of a housing with two compartments either of which will accommodate a TF 2432 without its case. The other compartment is covered with a blank panel or can be used to house a second TF 2432 or similarly sized instrument. Full fitting instructions are supplied with the tray.

The mains lead supplied is a free cable fitted at one end with a socket that connects with the 3-pin plug at the rear of the instrument. When fitting a mains plug to the lead make sure the following colour coding is observed :-

Live	-	Brown
Neutral	-	Blue
Earth	-	Green/Yellow

Before connecting the instrument to the power supply, check that the AC SUPPLY switch at the rear is correctly set and that the corresponding value of fuse is fitted. The instrument is normally despatched with the switch set to 230 V, i.e. for operation from 190 to 264 V supplies.

To change to the 95 to 130 V supply range remove the switch locking plate, switch to 110 V and refit the plate to suit. Note that the fuse must also be changed to the rating indicated beside the switch.

2.2 CONTROLS AND CONNECTORS

Front panel

(1) SUPPLY switch - Turn clockwise to switch on. The display will illuminate when supply is on.

(2) SELECT switch - For l.f. or l.f. input channel.

⚠ CAUTION : Do not exceed the maximum a.c. or d.c. input levels stated in Sect. 1.2 - Data Summary.

(3) HF INPUT socket - 50 MHz to 560 MHz range. BNC 50 Ω connector.

(4) LF INPUT socket - 10 Hz to 200 MHz range. BNC 50 Ω connector.

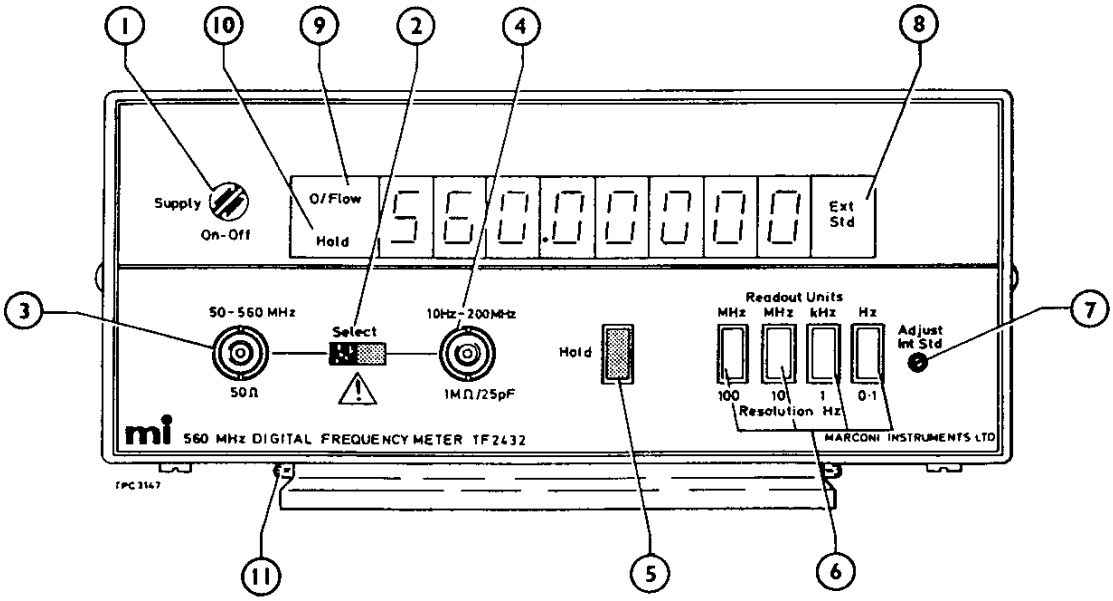

Fig. 2.1 Front panel controls and connectors

(5) HOLD - Push button action prevents the memory being updated. This allows the display to be retained indefinitely even if the input is removed. Push again to release and allow updating of the memory to continue.

(6) READOUT UNITS - Four interlocking push buttons select gate time and hence resolution and decimal point position.

(7) ADJ INT STD - A screwdriver adjustable trimmer with 10 turns allows fine adjustment of the internal frequency standard (see Sect. 4.5).

(8) EXT STD indicator - Shows that rear panel 10 MHz STANDARD - EXT has been selected.

(9) O/FLOW indicator - Shows that the most significant digit or digits have overflowed the display.

(10) HOLD indicator - Shows that HOLD button has been engaged.

(11) SUPPORT - Hinges down to raise the front of the instrument.

Rear panel

EXT STANDARD - 50 Ω BNC socket accepts 1 MHz or 100 kHz signal depending on setting of switch. Signal applied here overrides the internal standard.

INT STANDARD - 50 Ω BNC socket provides 1 MHz output from internal oscillator.

⚠ CAUTION : Do not exceed 10 V r.m.s. p-p at the EXT STD socket at 100 kHz or 1 MHz. No damage will be caused to the instrument if voltage inputs up to 250 V r.m.s. at 50 Hz are applied.

AC SUPPLY - Position of locking plate allows switch to select either 230 V or 110 V supply and reveals appropriate fuse rating.

2.3 FREQUENCY MEASUREMENT

(1) Set the SELECT switch to suit the input frequency and connect the signal to be measured to the selected input socket.

(2) The instrument is controlled from its internal 1 MHz standard unless an external standard is connected as in Sect. 2.4.

(3) Select the required READOUT UNITS, noting the corresponding resolution figure, i.e. the value of the smallest units in the display. The decimal point position, readout calibration and gate and display times are shown in Fig. 2.2.

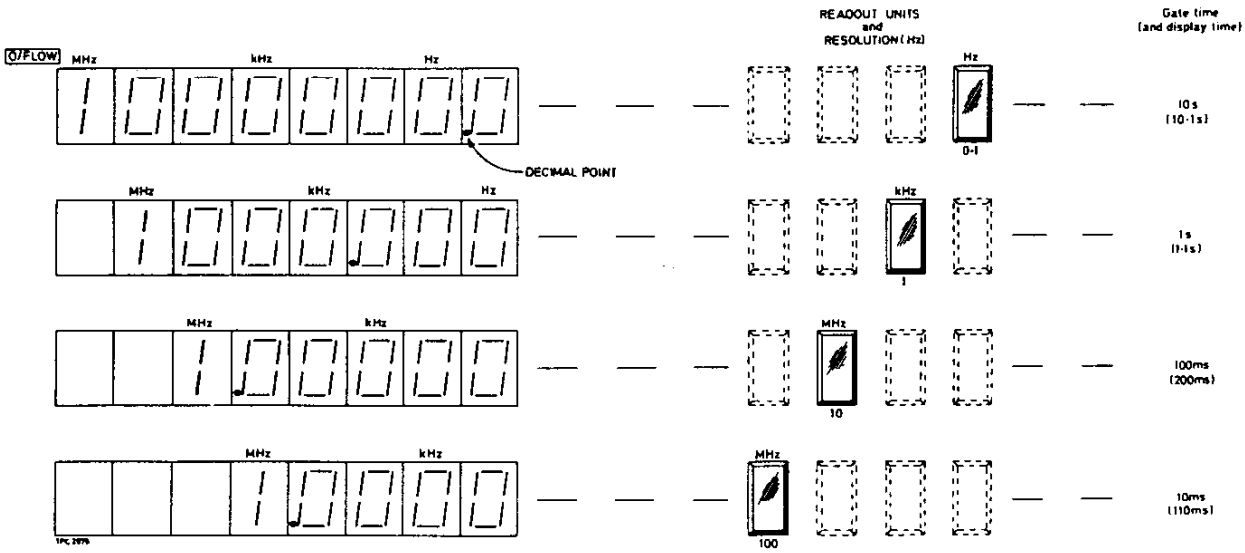

Fig. 2.2 Readout calibration and display data for a 10 MHz signal

(4) If the resolution selected results in a display of more than 8 digits the overflow indicator illuminates and the most significant digits are 'lost'.

The display will be updated at the intervals shown in Fig. 2.2 unless the HOLD button is pressed. In this case the HOLD indicator will light and the display will be held indefinitely, even if the input signal is removed.

2.4 USE OF EXTERNAL STANDARD

A 100 kHz or 1 MHz external standard can be used in place of the internal 1 MHz standard. To do this, set the rear panel EXT STD to 100 kHz or 1 MHz as appropriate and connect the external standard signal to the associated socket. This automatically overrides the internal standard and causes the front panel EXT STD indicator to light.

2.5 SELF CHECK PROCEDURE

A simple test to show that the instrument is working correctly can be performed by using it to measure its own standard output. This does not, of course, verify the accuracy of indication since any error in the standard will be cancelled by a corresponding error in the gating time which is derived from the same source.

To do the test proceed as follows :

(1) Connect the 1 MHz INT STD socket to the selected INPUT socket and terminate the signal into 50 Ω by using a T-connector.

(2) Remove any connection to the EXT STD socket.

(3) Select each of the READOUT UNITS in turn and check that the readout is within ±1 count of that shown in Fig. 2.2.

(4) Press the HOLD button and check that the HOLD indicator lights and that the readout is retained when the input lead is disconnected.

2.6 DIGIT CHECK PROCEDURE

To verify that the readout display tubes are all working correctly, disengage the four READOUT UNITS buttons and the HOLD button. All l.e.d. segments and decimal points should now be illuminated.

Chapter 3

Technical description

3.1 INPUT AMPLIFIER, GATE AND HIGH SPEED DECADES

LF input

The input signal is fed into an input buffer comprising a dual gate m.o.s. f.e.t. and emitter follower whose gain and, for high level signals, attenuation can be controlled by a d.c. voltage applied to the m.o.s. f.e.t. The output of the buffer is detected and converted into a proportional d.c. voltage which controls the buffer.

The output signal from the subsequent wide band amplifier is of constant amplitude and its level just exceeds the hysteresis window of the Schmitt trigger thus ensuring reliable triggering even when the signal has a poor signal-to-noise ratio.

The output from the Schmitt trigger, when selected by a relay, is fed to the input of the high speed i.c. decade which contains an integral main gate. The pulse train from the main gate is counted by an eight decade counter, two and a half decades of which are discrete i.c's and the remainder part of a custom designed l.s.i. m.o.s. i.c.

HF input

The input signal is fed into an overload protected and gain controlled input buffer comprising an r.f. fuse, an active limiting circuit and fast acting p.i.n. diode attenuator. The signal is then amplified and fed via a diode switch to the high speed decade. This signal is also detected, converted into a proportional d.c. voltage and used to control the p.i.n. diode attenuator. The constant amplitude signal thus derived is counted as described above.

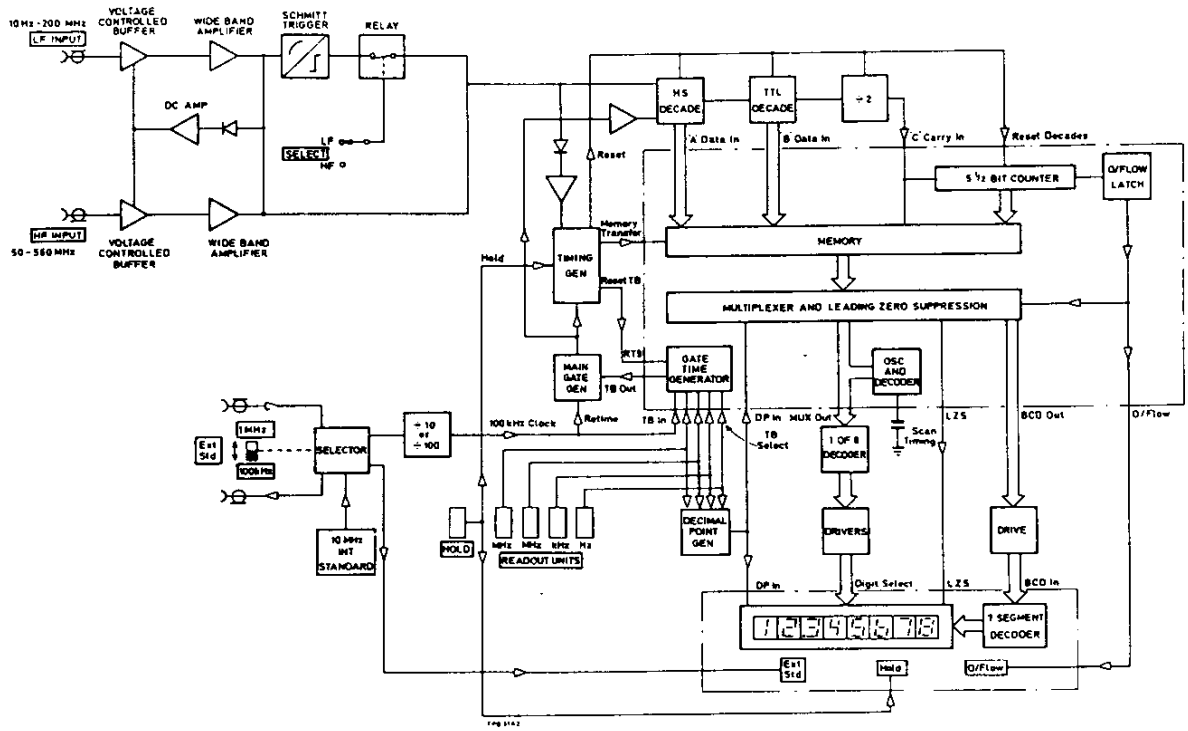

Fig. 3.1 Block diagram

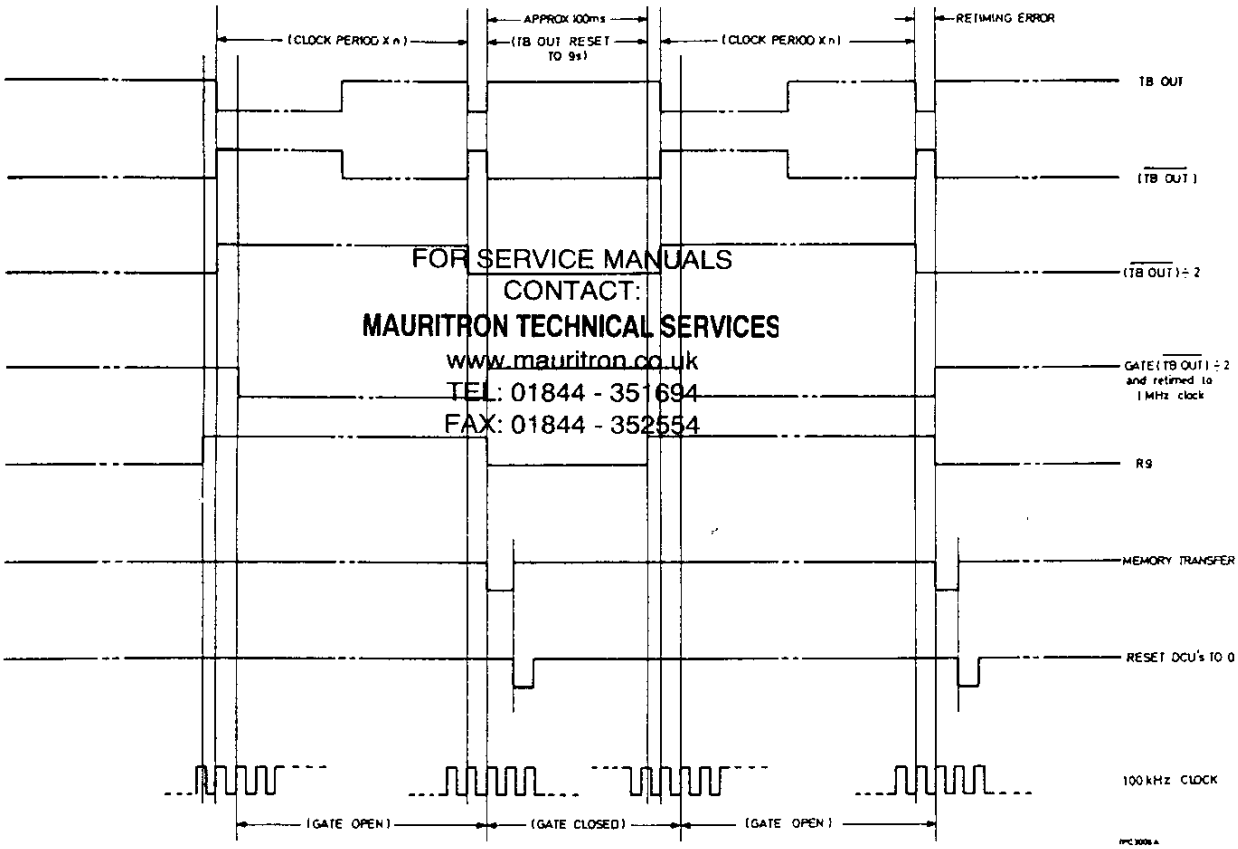

Fig. 3.2 Timing sequence

3.2 CLOCK SELECTION AND GATE GENERATOR

The counter's main reference clock can be generated from an internal 10 MHz crystal oscillator or introduced from an external 1 MHz or 100 kHz source via the EXT STD socket. A signal applied to the EXT STD socket will automatically override the counter's internal standard.

Before being used to generate the gating signal or to retime the main gate the internal 10 MHz signal is divided by 100. This 100 kHz clock is fed into the m.o.s. i.c. and divided down by the selected ratio, the maximum being 10^6.

The time base output is divided by two and retimed with the original 100 kHz clock signal before being applied to the main gate.

3.3 TIMING GENERATOR

TTL monostable integrated circuits generate a timing sequence which describes the display time, memory transfer and reset times. Waveform diagrams which show the timing sequences are illustrated in Fig. 3.2.

3.4 LOGIC CIRCUIT

A custom designed l.s.i. m.o.s. integrated circuit is the heart of the counter and contains all the digital logic that does not need to run at high currents or speeds.

The i.c. contains a $5\frac{1}{2}$ decade counter with overflow latch and an eight decade memory. Two and a half decades of the memory have a parallel data loading capability to enable the i.c. to be used with higher speed logic. The data from the memories are fed into a multiplexer which is controlled by an on-chip oscillator and 1 of 8 encoder.

A signal for providing leading zero suppression is generated in the i.c. The 40 pin package also contains a time base section comprising a seven decade divider and a 1 of 7 data selector.

3.5 SWITCHING

Front panel controls select HOLD and one of four gate times. The 10 ms, 100 ms, 1 s or 10 s gates describe the display resolution, units and decimal point position.

3.6 DISPLAY BOARD

The display board contains the 7 segment l.e.d. displays and b.c.d. to 7 segment encoder with its associated current limiting resistors. The board requires 1 of n digit drive (where n = number of displays), multiplexed b.c.d. information, a decimal point signal and leading zero suppression signal. Three lamps are mounted on this board indicating HOLD, OVERFLOW and EXTERNAL STANDARD operation.

Chapter 4

Maintenance

4.1 GENERAL

This section is intended as a general guide to the servicing of the instrument. In case of difficulties that cannot be resolved with the aid of this book, or for advice on maintaining the instrument, please write or phone our Service Division or nearest Area Office or Agent. Always mention the type number or serial number of your instrument. (Address on rear cover.)

The only part of the instrument which should need regular attention is the 10 MHz oscillator. This should be periodically checked to ensure that it is operating at the correct frequency, and adjusted to offset any ageing drift that has taken place.

CAUTION Static sensitive components

Components identified with the symbol ⚠ on the circuit diagrams and/or parts list are static sensitive devices. The presence of such devices is also indicated in the equipment by orange discs, flags or labels bearing the same symbol. Certain handling precautions must be observed to prevent these components being permanently damaged by static charges or fast surges.

(1) If a printed board containing static sensitive components (as indicated by a warning disc or flag) is removed, it must be temporarily stored in a conductive plastic bag.

(2) If a static sensitive component is to be removed or replaced the following anti-static equipment must be used.

A work bench with an earthed conductive surface.

Metallic tools earthed either permanently or by repeated discharges.

A low-voltage earthed soldering iron.

An earthed wrist strap and a conductive earthed seat cover for the operator, whose outer clothing must not be of man-made fibre.

(3) As a general precaution, avoid touching the leads of a static sensitive component. When handling a new one, leave it in its conducting mount until it is required for use.

4.2 FUSES

The counter is protected by a delay fuse in the line conductor of the mains supply. The instrument should be turned off while the fuse is changed. Access is by means of a screw cap on the rear panel.

The h.f. input circuit is protected by a 0.1 A r.f. fuse in series with SKB. To gain access to this fuse which is located near the front of the function board, switch off the instrument, remove the control board/display board assembly and unscrew the metal screen near the input socket. To change a fuse unsolder it from the printed board and replace it with the adjacent spare one.

4.3 REMOVING COVERS

The cover is retained by two screws at the back of the instrument. These screws also hold the protective clamps and their removal allows the case to be slid backwards over the rear panel. The separation of instrument and case is best achieved with the instrument upside down.

4.4 ACCESS TO POWER SUPPLY

The function board, control board and transformer support chassis are held between the two side frames of the uncased instrument.

Power supply components are below the chassis and access to them can be gained by hinging the chassis forward into a vertical position. This is done by first removing the control board and then removing the two chassis retaining screws on the rear panel and the rear two screws holding the chassis to the side frames. The remaining side frame screws should then be slackened, so that the chassis may hinge about them, and tightened to hold it in a convenient position. No electrical connections need to be removed.

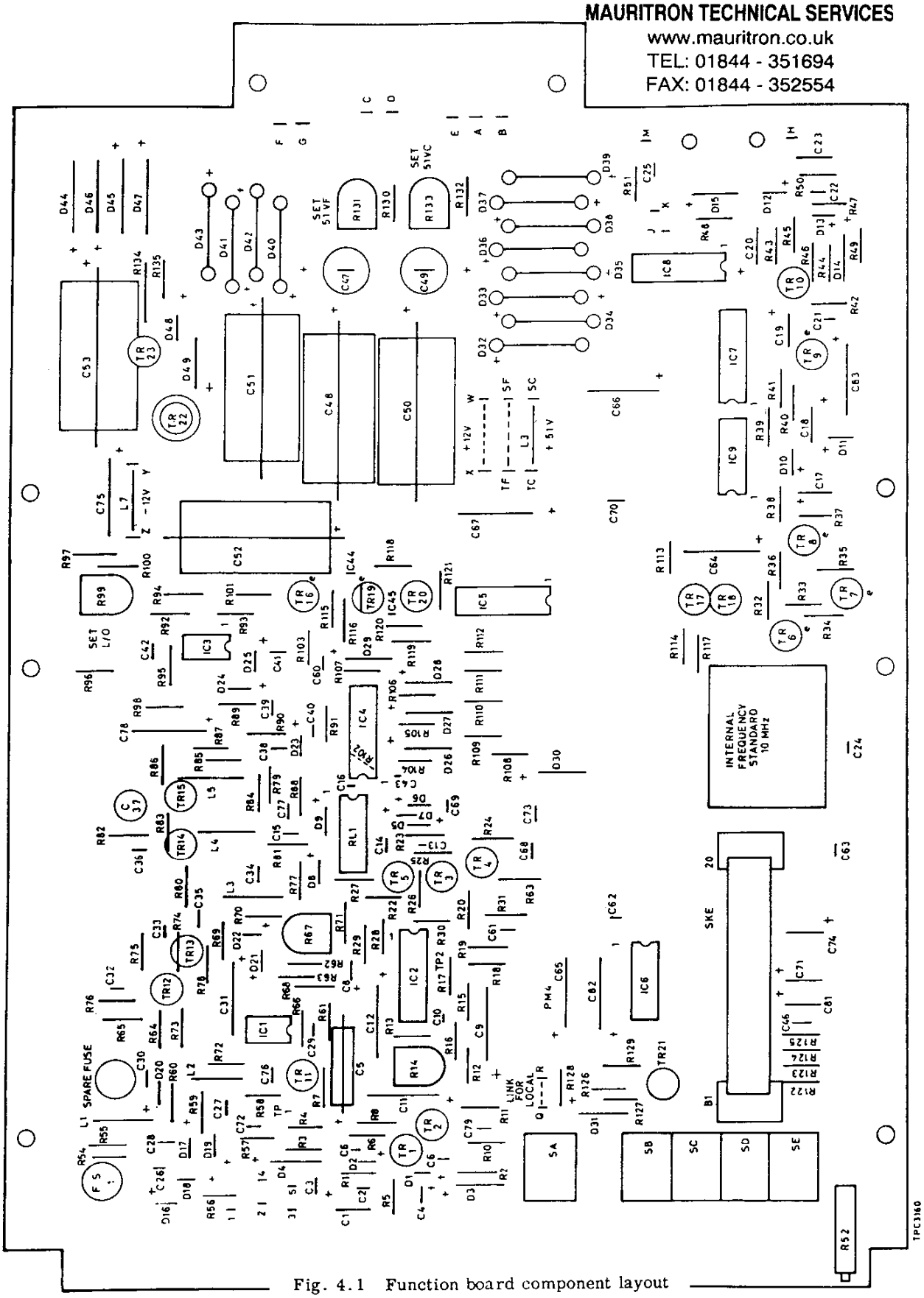

Fig. 4.1 Function board component layout

4.5 ADJUSTMENT OF INTERNAL 10 MHz STANDARD

The accuracy of the internal standard can be checked by comparing it with an accurately known external standard as follows :-

(1) Connect a known external frequency to the selected input socket. The value of the frequency is unimportant, although higher frequency allows greater discrimination.

(2) If necessary fine adjustment of the internal standard can be done, without removing the instrument from its case, by means of the ADJ INT STD facility on the front panel.

If the internal standard cannot be set accurately with the ADJ INT STD, coarse adjustment to the oscillator frequency can be carried out by means of a preset variable capacitor (A3C2 or A4C2). Access to this is obtained by removal of the instrument case.

4.6 ACCESS TO CONTROL BOARD AND DISPLAY BOARD

The display board is connected to the control board via a 40 way edge connector at the front of the instrument. The control board itself is fixed to the top of the instrument and electrically connected to the lower function board via a 20 way double sided link board. When the seven fixing screws have been removed, the control board/display board assembly can be pulled away from the instrument. For servicing purposes, the control board/display board assembly can be fitted into the edge connector on the function board as shown in Fig. 4.2 after removing the link board that normally provides the interconnection. (The front panel need not be removed.) The instrument will still operate in this position.

The display board may be removed from the control board by simply pulling away from the front of the control board.

4.7 ACCESS TO AMPLIFIER BUFFER

The amplifiers are located under a metal screen near the input socket. Should it be necessary to remove this screen the procedure is as follows :-

(1) Turn off the instrument.

(2) Remove the control board/display board assembly.

(3) Remove the retaining screws at the top front end of the input bracket.

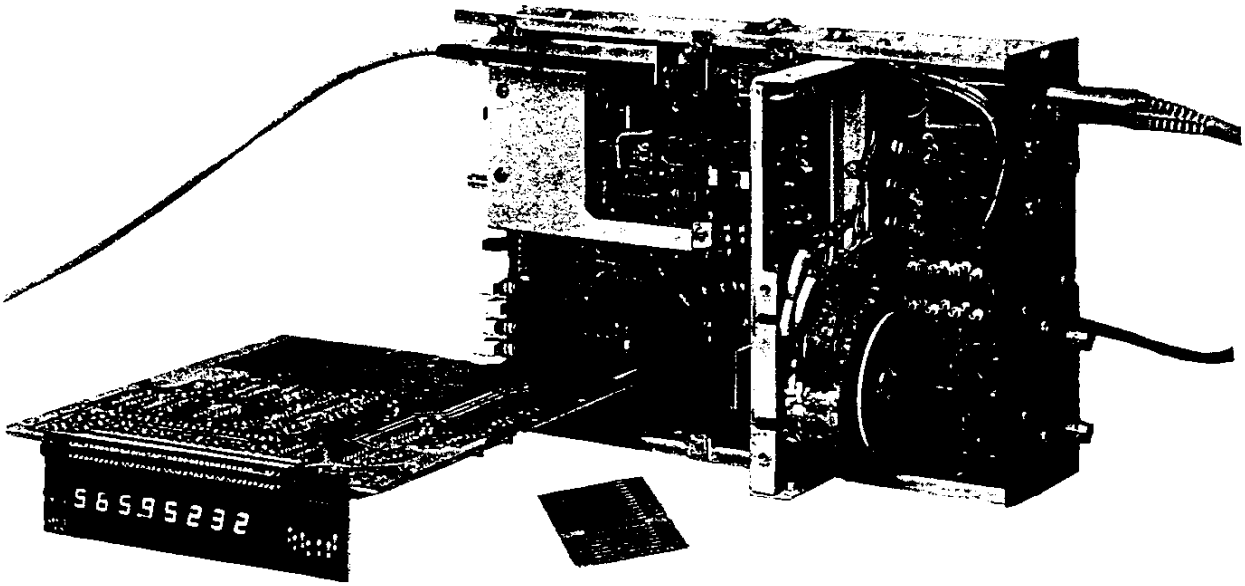

Fig. 4.2 Control board and display board operating in the servicing position

(4) Turn the instrument upside down and remove the screws on the bottom of the input bracket and screen.

(5) Replace the control board/display board assembly and switch on the instrument.

4.8 POWER SUPPLY LINKS

Inductors L6 and L7 between tags SC - TC and Y - Z below the mains switch, and the wire links between tags SF - TF and W - X can be removed to isolate the power supply from the counter circuit. Adjustment of the preset variable resistors R131 and R133 which sets 5.1 VF and 5.1 VC should be carried out with these links in position, i.e., with a load on the power supply.

4.9 POWER SUPPLY ADJUSTMENT

If repairs have been made to the power supply the 5.1 V lines should be reset as follows :-

(1) Connect a digital voltmeter such as the Fluke 8000 A set to d.c. volts, 10 mV resolution, to link TF - SF.

(2) Adjust R131 until the d.v.m. reads 5.11 V ±0.1 V.

(3) Transfer the d.v.m. to link SC - TC and adjust R133 for a reading of 5.11 V ±0.1 V.

4.10 AMPLIFIER ADJUSTMENT

The response of the h.f. amplifier can be adjusted by C37 on the function board. The measurement technique best used is to apply a swept frequency to the input of the instrument and to pick off the signal appearing at pin 14 of IC4 via an a.c. coupled 100 Ω detector. The response should be set for optimum flatness over the range of the amplifier.

4.11 AGC ADJUSTMENT

Monitor TP1 (at the emitter of TR11 on the function board) with a voltmeter or oscilloscope and set the d.c. potential at this point to be +4 V using R67 on the function board.

4.12 IC4 BIAS ADJUSTMENT

Miscounting when using the l.f. input can be caused by an incorrect d.c. bias at the input (pin 14) of IC4. This bias can be corrected using R27. The mid-point of the signal appearing at this point should correspond to the no-signal d.c. level when the front panel input switch is selecting the h.f. input.

4.13 SET LOCKOUT ADJUSTMENT

A characteristic of IC4 is that with no signal input it will oscillate at a frequency around 300 to 400 MHz. With the h.f. input selected and no signal applied to it, R99 should be set so that the counter just fails to read the oscillating frequency.

Chapter 6

Replaceable parts

Introduction

Each sub-assembly or printed circuit board in this instrument has been allocated a unit identification in the sequence A0 to A11.

The complete component reference carries its unit number as a prefix e.g. A1C1 but for convenience in the text and on circuit diagrams the prefix is not used.

However, when ordering replacements or in correspondence the complete component reference must be quoted.

The components are listed in alphanumerical order of the complete circuit reference and the following abbreviations are used :

C : capacitor
Carb : carbon
Cer : ceramic
Cerm : cermet
D : semiconductor diode
DI : digital indicator
Elec : electrolytic
FS : fuse
IC : integrated circuit
L : inductor
Max : maximum
ME : meter
Met : metal
Mic : mica
Min : minimum value
Ox : oxide
PL : plug
Plas : plastic dielectric
R : resistor
REG : regulator
S : switch
SK : socket
T : transformer
Tant : tantalum
TP : terminal
TR : transistor
Var : variable
WW : wirewound
XL : crystal
† : value selected during test; nominal value listed
Ø : feed-through component
W : watts at 70 °C
⚠ : static sensitive component

NOTE : One or more of the components fitted in this instrument may differ from those listed in this chapter for any of the following reasons :

(a) Components indicated by a † have their value selected during test to achieve particular performance limits.

(b) Owing to supply difficulties, components of different value or type may be substituted provided the overall performance of the instrument is maintained.

(c) As part of a policy of continuous development components may be changed in value or type to obtain detail improvements in performance.

When there is a difference between the component fitted and the one listed, always use as a replacement the same type and value as found in the instrument.

Ordering

When ordering replacements, address the order to our Service Division (address on rear cover) or nearest agent and specify the following for each component required.

(1) Type* and serial number of instrument.

(2) Complete circuit reference.

(3) Description.

(4) MI code number.

* As given on the serial number label at the rear of the instrument; if this is superseded by a number label, quote the model number instead of the type number.

Circuit reference	Description	M.I. code
Unit A0 : Overall assembly		
FS1	250mA	23411-055P
	Fuse holder	23416-191C
	Cover for fuse holder	37575-121B
PLA	Mains plug/filter assembly	23423-150L
	Cover for mains plug/filter	37590-150P
REG1	Voltage regulator (5V) 7805	28461-707G
REG2	Voltage regulator (5V) 7805	28461-707G
REG3	Voltage regulator (12V) 7812	28461-708V
SA	SUPPLY ON/OFF	23462-353A
	Cover for SA	37590-177D
	Extension spindle for SA	37590-143S
SB	230V/115V	23467-155G
	Cover (red) for SB	37573-145C
	Locking plate for SB	34444-116Y
T1	Mains transformer	43490-035R
	* Rubber cushion pad for T1	37490-263X

* Replace pad when replacing T1.

Circuit reference	Description	M.I. code
Unit A1 : Function board		
	Complete board	44827-500U
C1	Plas 0.1μF 20% 250V	26582-799N
C2	Cer 22pF 2.5pF 750V	26324-715T
C3	Tant 0.47μF 20% 35V	26486-207L
C4	Tant 0.47μF 20% 35V	26486-207L
C5	Elec 100μF -20+100% 25V	26415-813U
C6	Cer 0.047μF -20+80% 25V	26383-017U
C7	Cer 0.047μF -20+80% 25V	26383-017U
C8	Tant 4.7μF 20% 10V	26486-554G
C9	Tant 47μF 20% 6V	26486-593D
C10 †	Cer 10pF 5% 50V	26343-465H
C11	Tant 47μF 20% 6V	26486-593D
C12	Tant 47μF 20% 6V	26486-593D
C13	Cer 22pF 5% 50V	26343-469N
C14	Cer 0.047μF -20+80% 25V	26383-017U
C15	Cer 0.001μF -20+80% 500V	26383-242P
C16	Cer 47pF 5% 50V	26343-473L
C17	Tant 4.7μF 20% 10V	26486-554G
C18	Tant 4.7μF 20% 10V	26486-554G
C19	Cer 0.001μF -20+80% 500V	26383-242P
C20	Tant 4.7μF 20% 10V	26486-554G
C21	Cer 0.01μF -20+80% 100V	26383-055L
C22	Cer 22pF 2.5pF 750V	26324-715T
C23	Plas 0.1μF 20% 250V	26582-799N
C24	Cer 0.047μF -20+80% 25V	26383-017U
C25	Cer 0.047μF -20+80% 25V	26383-017U
C26	Cer 0.001μF -20+80% 500V	26383-242P
C27	Cer 0.047μF -20+80% 25V	26383-017U
C28	Cer 0.001μF -20+80% 500V	26383-242P
C29	Cer 0.01μF -20+80% 100V	26383-055L
C30	Cer 0.001μF -20+80% 500V	26383-242P
C31	Tant 22μF 20% 15V	26486-583L
C32	Cer 0.047μF -20+80% 25V	26383-017U
C33	Cer 22pF 2.5pF 750V	26324-715T
C34	Cer 22pF 2.5pF 750V	26324-715T
C35	Cer 22pF 2.5pF 750V	26324-715T
C36	Cer 10pF ±0.25pF 750V	26324-709S
C37	Var cer 4.5-15pF	26847-115H
C38	Cer 0.001μF -20+80% 500V	26383-242P
C39	Cer 22pF ±2.5pF 750V	26324-715T
C40	Cer 0.001μF -20+80% 500V	26383-242P
C41	Cer 0.047μF -20+80% 25V	26383-017U

For symbols and abbreviations see introduction to this chapter

Circuit reference	Description	M.I. code
C42	Cer 0.01μF -20+80% 100V	26383-055L
C43	Cer 47pF 5% 50V	26343-473L
C44	Cer 33pF 5% 50V	26343-471Y
C45	Cer 330pF 2% 50V	26343-483D
C46	Cer 0.047μF -20+80% 25V	26383-017U
C47	Elec 470μF -20+100% 16V	26423-262J
C48	Elec 1000μF -20+100% 16V	26415-825W
C49	Elec 470μF -20+100% 16V	26423-262J
C50	Elec 1000μF -20+100% 16V	26415-825W
C51	Elec 470μF -20+100% 40V	26415-823V
C52	Elec 470μF -20+100% 40V	26415-823V
C53	Elec 470μF -20+100% 40V	26415-823V
C60	Cer 0.047μF -20+80% 25V	26383-017U
C61	Cer 0.047μF -20+80% 25V	26383-017U
C62	Cer 0.047μF -20+80% 25V	26383-017U
C63	Cer 0.047μF -20+80% 25V	26383-017U
C64	Tant 47μF 20% 6V	26486-593D
C65	Tant 47μF 20% 6V	26486-593D
C66	Tant 47μF 20% 6V	26486-593D
C67	Tant 47μF 20% 6V	26486-593D
C68	Cer 0.047μF -20+80% 25V	26383-017U
C69	Cer 0.047μF -20+80% 25V	26383-017U
C70	Cer 0.047μF -20+80% 25V	26383-017U
C71	Tant 4.7μF 20% 10V	26486-554G
C72	Cer 0.047μF -20+80% 25V	26383-017U
C73	Cer 0.047μF -20+80% 25V	26383-017U
C74	Tant 2.2μF 20% 20V	26486-540K
C75	Tant 22μF 20% 15V	26486-583L
C76	Cer 0.047μF -20+80% 25V	26383-017U
C77	Cer 0.047μF -20+80% 25V	26383-017U
C78	Tant 22μF 20% 15V	26486-583L
C79	Cer 0.047μF -20+80% 25V	26383-017U
C81	Tant 2.2μF 20% 20V	26486-540K
C82	Tant 22μF 20% 15V	26486-583L
C83	Tant 22μF 20% 15V	26486-583L
C84	Cer 2.2μF 5% 50V	26343-457R
D1	1N4148	28336-676J
D2	1N4148	28336-676J
D3	Z5B10.0	28371-843E
D4	Z5B10.0	28371-843E
D5	1N4148	28336-676J
D6	1N4148	28336-676J
D7	1N4148	28336-676J
D8	1N4148	28336-676J
D9	1N4148	28336-676J
D10	1N4148	28336-676J
D11	1N4148	28336-676J
D12	1N4148	28336-676J
D13	1N4148	28336-676J
D14	Z5B3.0	28371-203G
D15	Z5B3.0	28371-203G
D16	MBD102	28349-004A
D17	MBD102	28349-004A
D18	MBD102	28349-004A
D19	MBD102	28349-004A
D20	5082-3080	28383-999X
D21	MBD102	28349-004A
D22	MBD102	28349-004A
D23	1N4148	28336-676J
D24	MBD102	28349-004A
D25	MBD102	28349-004A
D26	Z5B4.7	28371-373V
D27	Z5B4.7	28371-373V
D28	Z5B4.7	28371-373V
D29	Z5B4.7	28371-373V
D30	Z5B5.1	28371-403N
D31	Z5B3.6	28371-223Z

For symbols and abbreviations see introduction to this chapter

Circuit reference	Description	M.I. code
D32	1N4004	28357-028K
D33	1N4004	28357-028K
D34	1N4004	28357-028K
D35	1N4004	28357-028K
D36	1N4004	28357-028K
D37	1N4004	28357-028K
D38	1N4004	28357-028K
D39	1N4004	28357-028K
D40	1N4004	28357-028K
D41	1N4004	28357-028K
D42	1N4004	28357-028K
D43	1N4004	28357-028K
D44	1N4004	28357-028K
D45	1N4004	28357-028K
D46	1N4004	28357-028K
D47	1N4004	28357-028K
D48	1N4148	28336-676J
D49	Z5B13.0	28372-213U
D50	1N825	28371-494Z
FS1	RF Littel fuse 0.1A 125V	23411-801L
IC1	μA741	28461-304T
IC2	MC1692L	28469-170N
IC3	μA741	28461-304T
IC4	SP8635SB	28464-012G
IC5	82S90	28464-010J
IC6	7472	28462-003L
IC7	74132	28469-202E
IC8	7490	28464-002E
IC9	7490	28464-002E
L1	Choke 33μH	23642-558W
L2	Choke 33μH	23642-558W
L3	Choke 0.22μH	23642-545E
L4	Choke 1μH	23642-549L

Circuit reference	Description	M.I. code
L5	Choke 1μH	23642-549L
L6	Choke 1μH	23642-549L
L7	Choke 10μH	23642-555G
R1	Carb 1MΩ 5% 1/8W	24311-945Y
R2	Met film 4.7kΩ 2% ¼W	24773-289W
R3	Met film 4.7kΩ 2% ¼W	24773-289W
R4	Met film 10kΩ 2% ¼W	24773-297M
R5	Carb 10MΩ 10% 1/8W	24321-885W
R6	Met film 220kΩ 2% ¼W	24773-329T
R7	Met film 510Ω 2% ¼W	24773-266C
R8	Met film 510Ω 2% ¼W	24773-266C
R9	Met film 51Ω 2% ¼W	24773-242Z
R10	Met film 33Ω 2% ¼W	24773-237K
R11	Met film 1kΩ 2% ¼W	24773-273A
R12	Met film 2.2Ω 2% ¼W	24773-209E
R13	Met film 1kΩ 2% ¼W	24773-273A
R14	Var cer 10kΩ 10% ½W	25711-543D
R15	Met film 510Ω 2% ¼W	24773-266C
R16	Met film 68Ω 2% ¼W	24773-269K
R17	Met film 15kΩ 2% ¼W	24773-301P
R18	Met film 510Ω 2% ¼W	24773-266C
R19	Met film 510Ω 2% ¼W	24773-266C
R20	Met film 2.2Ω 2% ¼W	24773-209E
R21	Met film 82Ω 2% ¼W	24773-247N
R22	Met film 330Ω 2% ¼W	24773-261D
R23	Met film 100Ω 2% ¼W	24773-249J
R24	Met film 560Ω 2% ¼W	24773-267R
R25	Met film 220Ω 2% ¼W	24773-257W
R26	Met film 510Ω 2% ¼W	24773-266C
R27 †	Met film 820Ω 2% ¼W	24773-271B
R28	Met film 200Ω 2% ¼W	24773-256S
R29	Met film 510Ω 2% ¼W	24773-266C
R30	Met film 330Ω 2% ¼W	24773-261D
R31	Met film 220Ω 2% ¼W	24773-257W

For symbols and abbreviations see introduction to this chapter

Circuit reference	Description	M.I. code	Circuit reference	Description	M.I. code
R32	Met film 1kΩ 2% ¼W	24773-273A	R68	Met film 22kΩ 2% ¼W	24773-305R
R33	Met film 1kΩ 2% ¼W	24773-273A	R69	Met film 22kΩ 2% ¼W	24773-305R
R34	Met film 10kΩ 2% ¼W	24773-297M	R70	Met film 10kΩ 2% ¼W	24773-297M
R35	Met film 10kΩ 2% ¼W	24773-297M	R71	Met film 47Ω 2% ¼W	24773-241A
R36	Met film 1kΩ 2% ¼W	24773-273A	R72	Met film 4.7kΩ 2% ¼W	24773-289W
R37	Met film 4.7kΩ 2% ¼W	24773-289W	R73	Met film 1.8kΩ 2% ¼W	24773-279N
R38	Met film 4.7kΩ 2% ¼W	24773-289W	R74	Met film 4.7kΩ 2% ¼W	24773-289W
R39	Met film 750Ω 2% ¼W	24773-270R	R75	Met film 100Ω 2% ¼W	24773-249J
R40	Met film 47Ω 2% ¼W	24773-241A	R76	Met film 100Ω 2% ¼W	24773-249J
R41	Met film 22kΩ 2% ¼W	24773-305R	R77	Met film 390Ω 2% ¼W	24773-263P
R42	Met film 750Ω 2% ¼W	24773-270R	R78	Met film 1kΩ 2% ¼W	24773-273A
R43	Met film 47Ω 2% ¼W	24773-241A	R79	Met film 100Ω 2% ¼W	24773-249J
R44	Met film 22kΩ 2% ¼W	24773-305R	R80	Met film 22Ω 2% ¼W	24773-233M
R45	Met film 33Ω 2% ¼W	24773-237K	R81	Met film 1.8kΩ 2% ¼W	24773-279N
R46	Met film 22kΩ 2% ¼W	24773-305R	R82	Met film 15Ω 2% ¼W	24773-229X
R47	Carb 10MΩ 10% 1/8W	24321-885W	R83	Met film 620Ω 2% ¼W	24773-268B
R48	Met film 4.7kΩ 2% ¼W	24773-289W	R84	Met film 510Ω 2% ¼W	24773-266C
R49	Met film 4.7kΩ 2% ¼W	24773-289W	R85	Met film 2.2Ω 2% ¼W	24773-209E
R50	Carb 1MΩ 5% 1/8W	24311-945Y	R86	Met film 68Ω 2% ¼W	24773-245U
R51	Met film 1kΩ 2% ¼W	24773-273A	R87	Met film 1kΩ 2% ¼W	24773-273A
R52	Var cer 10kΩ 10% 0.3W	25748-507X	R88	Met film 560Ω 2% ¼W	24773-267R
			R89	Met film 510Ω 2% ¼W	24773-266C
R54	Met film 220Ω 2% ¼W	24773-257W	R90	Met film 560Ω 2% ¼W	24773-267R
R55	Met film 220Ω 2% ¼W	24773-257W	R91	Met film 56kΩ 2% ¼W	24773-315U
R56	Met film 1.2kΩ 2% ¼W	24773-275H	R92	Met film 4.7kΩ 2% ¼W	24773-289W
R57	Met film 1.2kΩ 2% ¼W	24773-275H	R93	Met film 100kΩ 2% ¼W	24773-321L
R58	Met film 390Ω 2% ¼W	24773-263P	R94	Met film 100kΩ 2% ¼W	24773-321L
R59	Met film 220Ω 2% ¼W	24773-257W	R95	Carb 2.2MΩ 10% 1/8W	24321-877J
R60	Met film 2kΩ 2% ¼W	24773-280U	R96	Met film 510Ω 2% ¼W	24773-266C
R61	Carb 1MΩ 5% 1/8W	24311-945Y	R97	Met film 510Ω 2% ¼W	24773-266C
R62	Met film 100kΩ 2% ¼W	24773-321L	R98	Met film 15kΩ 2% ¼W	24773-301P
R63	Met film 100kΩ 2% ¼W	24773-321L	R99	Var cer 2.2kΩ 10% ½W	25711-547M
R64	Met film 10Ω 2% ¼W	24773-225W	R100	Met film 15kΩ 2% ¼W	24773-301P
R65	Met film 100Ω 2% ¼W	24773-249J	R101	Met film 10kΩ 2% ¼W	24773-297M
R66	Met film 22kΩ 2% ¼W	24773-305R			
R67	Var cer 10kΩ 10% ½W	25711-543D	R103	Met film 1kΩ 2% ¼W	24773-273A

For symbols and abbreviations see introduction to this chapter

Circuit reference	Description	M.I. code
R104	Met film 3.3kΩ 2% ¼W	24773-285F
R105	Met film 3.3kΩ 2% ¼W	24773-285F
R106	Met film 3.3kΩ 2% ¼W	24773-285F
R107	Met film 3.3kΩ 2% ¼W	24773-285F
R108	Met film 4.7kΩ 2% ¼W	24773-289W
R109	Met film 22kΩ 2% ¼W	24773-305R
R110	Met film 22kΩ 2% ¼W	24773-305R
R111	Met film 22kΩ 2% ¼W	24773-305R
R112	Met film 22kΩ 2% ¼W	24773-305R
R113	Met film 47Ω 2% ¼W	24773-241A
R114	Met film 10kΩ 2% ¼W	24773-297M
R115	Met film 680Ω 2% ¼W	24773-269K
R116	Met film 10Ω 2% ¼W	24773-225W
R117	Met film 1kΩ 2% ¼W	24773-273A
R118	Met film 47Ω 2% ¼W	24773-241A
R119	Met film 82Ω 2% ¼W	24773-247N
R120	Met film 560Ω 2% ¼W	24773-267R
R121	Met film 560Ω 2% ¼W	24773-267R
R122	Met film 510Ω 2% ¼W	24773-266C
R123	Met film 510Ω 2% ¼W	24773-266C
R124	Met film 510Ω 2% ¼W	24773-266C
R125	Met film 510 2% ¼W	24773-266C
R126	Met film 200Ω 2% ¼W	24773-256S
R127	Met film 33Ω 2% ¼W	24773-273K
R128	Met film 200Ω 2% ¼W	24773-256S
R129	Met film 510Ω 2% ¼W	24773-266C
R130	Met film 10kΩ 2% ¼W	24773-297M
R131	Var cer 100Ω 10% ½W	25711-545P
R132	Met film 10kΩ 2% ¼W	24773-297M
R133	Var cer 100Ω 10% ½W	25711-545P
R134	WW 100Ω 5% 1½W	25123-050L
R135	Met film 1.8kΩ 2% ¼W	24773-279N
R136	Met film 750Ω 2% ¼W	24773-270R
RL1	Reed relay	23486-445S
SA	HOLD	44338-055L

Circuit reference	Description	M.I. code
SB, SC, SD, SE	Push-button switch assembly	44338-054N
SF	SELECT	23467-155G
SG	EXT STD	23467-155G
SKA	LF INPUT 50Ω BNC receptacle	23443-406R
SKB	HF INPUT 50Ω BNC receptacle	23443-406R
SKC	EXT STD 50Ω BNC receptacle	23443-446H
SKD	INT STD 50Ω BNC receptacle	23443-446H
SKE	Edge connector 20-way	23435-056W
TR1	40673 ⚠	28459-010V
TR2	2N5179	28451-697Y
TR3	2N5179	28451-697Y
TR4	2N5179	28451-697Y
TR5	2N5179	28451-697Y
TR6	BC238B	28452-781A
TR7	BC238B	28452-781A
TR8	BC238B	28452-781A
TR9	2N5179	28451-697Y
TR10	40673 ⚠	28459-010V
TR11	BSX20	28452-197H
TR12	BFR90	28452-167U
TR13	BFR90	28452-167U
TR14	BFR90	28452-167U
TR15	BFR90	28452-167U
TR16	BC238B	28452-781A
TR17	BC238B	28452-781A
TR18	BC238B	28452-781A
TR19	MPS-L08	28431-767E
TR20	2N5179	28451-697Y
TR21	BC173C	28452-771P

For symbols and abbreviations see introduction to this chapter

Circuit reference	Description	M.I. code
TR22	MM4001	28438-436V
	Heat sink for TR22	28488-448H
TR23	BC308B	28433-455R

Unit A2 : Control board

Circuit reference	Description	M.I. code
	Complete board	44827-498J
C1	Cer 0.001μF -20+80% 500V	26383-242P
C2	Cer 0.001μF -20+80% 500V	26383-242P
C3	Tant 22μF 20% 15V	26486-583L
C4	Cer 0.001μF -20+80% 500V	26383-242P
C5	Cer 0.001μF -20+80% 500V	26383-242P
C6	Cer 0.001μF -20+80% 500V	26383-242P
C7	Cer 0.001μF -20+80% 500V	26383-242P
C8	Cer 0.001μF -20+80% 500V	26383-242P
C9	Cer 0.001μF -20+80% 500V	26383-242P
C10	Cer 0.001μF -20+80% 500V	26383-242P
C11	Cer 0.001μF -20+80% 500V	26383-242P
C12	Cer 0.01μF -20+80% 100V	26383-055L
C13	Elec 220μF -20+100% 10V	26415-817J
C14	Tant 6.8μF 20% 6V	26486-560W
C15	Tant 6.8μF 20% 6V	26486-560W
C16	Tant 47μF 20% 6V	26486-593D
C17	Tant 6.8μF 20% 6V	26486-560W
C18	Cer 0.047μF -20+80% 25V	26383-017U
C19	Cer 0.047μF -20+80% 25V	26383-017U
C20	Cer 0.047μF -20+80% 25V	26383-017U
C21	Cer 0.047μF -20+80% 25V	26383-017U
C22	Cer 0.047μF -20+80% 25V	26383-017U
IC1	7474	28462-002N
IC2	74123	28468-302D
IC3	74123	28468-302D
IC4	SN7400	28460-321L
IC5	7403A	28466-322J
IC6	MA150A ⚠	28469-379V
	Socket for IC6, 40 pin DIL	28488-047F
IC7	74145	28465-018E
IC8	SN7400	28466-321L
R1	Met film 330Ω 2% ¼W	24773-261D
R2	Met film 3.3kΩ 2% ¼W	24773-285F
R3	Met film 3.3kΩ 2% ¼W	24773-285F
R4	Met film 560Ω 2% ¼W	24773-267R
R5	Met film 22kΩ 2% ¼W	24773-305R
R6	Met film 22kΩ 2% ¼W	24773-305R
R7	Met film 22kΩ 2% ¼W	24773-305R
R8	Met film 1kΩ 2% ¼W	24773-273A
R9	Met film 47Ω 2% ¼W	24773-241A
R10	Met film 3.3kΩ 2% ¼W	24773-285F
R11	Met film 330Ω 2% ¼W	24773-261D
R12	Met film 3.3kΩ 2% ¼W	24773-285F
R13	Met film 330Ω 2% ¼W	24773-261D
R14	Met film 3.3kΩ 2% ¼W	24773-285F
R15	Met film 330Ω 2% ¼W	24773-261D
R16	Met film 3.3kΩ 2% ¼W	24773-285F
R17	Met film 3.3kΩ 2% ¼W	24773-285F
R18	Met film 3.3kΩ 2% ¼W	24773-285F
R19	Met film 3.3kΩ 2% ¼W	24773-285F
R20	Met film 330Ω 2% ¼W	24773-261D
R21	Met film 3.3kΩ 2% ¼W	24773-285F
R22	Met film 330Ω 2% ¼W	24773-261D
R23	Met film 3.3kΩ 2% ¼W	24773-285F
R24	Met film 330Ω 2% ¼W	24773-261D
R25	Met film 3.3kΩ 2% ¼W	24773-285F
R26	Met film 330Ω 2% ¼W	24773-261D
R27	Met film 3.3kΩ 2% ¼W	24773-285F
R28	Met film 330Ω 2% ¼W	24773-261D
R29	Met film 3.3kΩ 2% ¼W	24773-285F
R30	Met film 330Ω 2% ¼W	24773-261D
R31	Met film 3.3kΩ 2% ¼W	24773-285F
R32	Met film 330Ω 2% ¼W	24773-261D
R33	Met film 3.3kΩ 2% ¼W	24773-285F

For symbols and abbreviations see introduction to this chapter

Circuit reference	Description	M.I. code
R34	Met film 330Ω 2% ¼W	24773-261D
R35	Met film 4.7kΩ 2% ¼W	24773-289W
R36	Met film 4.7kΩ 2% ¼W	24773-289W
R37	Met film 4.7kΩ 2% ¼W	24773-289W
SKA	Edge connector 2 x 20 way	23435-056W
TR1	BC238	28452-781A
TR2	BC308	28433-455R
TR3	BC238	28452-781A
TR4	BC238	28452-781A
TR5	BC238	28452-781A
TR6	BC238	28452-781A
TR7	BC238	28452-781A
TR8	2N5448	28433-838Z
TR9	2N5448	28433-838Z
TR10	2N5448	28433-838Z
TR11	2N5448	28433-838Z
TR12	2N5448	28433-838Z
TR13	2N5448	28433-838Z
TR14	2N5448	28433-838Z
TR15	2N5448	28433-838Z

Unit A3 : Display board

	Complete board	44827-636N
C1	Cer 0.047μF -20+80% 25V	26383-017U
DI 1	7 segment display, 3620	28624-206W
DI 2	7 segment display, 3620	28624-206W
DI 3	7 segment display, 3620	28624-206W
DI 4	7 segment display, 3620	28624-206W
DI 5	7 segment display, 3620	28624-206W
DI 6	7 segment display, 3620	28624-206W
DI 7	7 segment display, 3620	28624-206W
DI 8	7 segment display, 3620	28624-206W

Circuit reference	Description	M.I. code
LP1	LED, red, FLV140	28624-109M
LP2	LED, red, FLV140	28624-109M
LP3	LED, red, FLV140	28624-109M
LP4	LED, red, FLV140	28624-109M
R1	Met film 56Ω 2% ¼W	24773-243H
R2	Met film 56Ω 2% ¼W	24773-243H
R3	Met film 56Ω 2% ¼W	24773-243H
R4	Met film 56Ω 2% ¼W	24773-243H
R5	Met film 56Ω 2% ¼W	24773-243H
R6	Met film 56Ω 2% ¼W	24773-243H
R7	Met film 56Ω 2% ¼W	24773-243H
SKA	Edge connector (40 way)	23435-073Z

Unit A4 : Interconnecting board

	Complete board	44827-637L
R1	Met film 1kΩ 2% ¼W	24773-243H
R2	Met film 10kΩ 2% ¼W	24773-297M
R3	Met film 10kΩ 2% ¼W	24773-297M
R4	Met film 10kΩ 2% ¼W	24773-297M
R5	Met film 10kΩ 2% ¼W	24773-297M

Unit A10 : 10 MHz oscillator board

	Complete board	44827-563E
C1	Cer 22pF 5% 50V	26343-469N
C2	Var cer 4.5pF - 15pF	26847-115H
C3	Cer 100pF 2% 50V	26343-477V
C4	Cer 220pF 2% 50V	26343-481S
C5	Cer 0.01μF -20+80% 100V	26383-055L
C6	Cer 0.01μF -20+80% 100V	26383-055L
D1	BB142	28381-097W
R1	Met film 47kΩ 2% ¼W	24773-313H
R2	Met film 47kΩ 2% ¼W	24773-313H
R3	Met film 2.2kΩ 2% ¼W	24773-281Y

For symbols and abbreviations see introduction to this chapter

Circuit reference	Description	M.I. code
R4	Met film 2.2kΩ 2% ¼W	24773-281Y
R5	Met film 68kΩ 2% ¼W	24773-317N
R6	Met film 680Ω 2% ¼W	24773-269K
R7	Met film 100kΩ 2% ¼W	24773-321L
TR1	BC238B	28452-781A
TR2	BC238B	28452-781A
XL1	10MHz AT cut	28312-047U

Unit A11 : 10 MHz HS oscillator board

	Complete board	44990-195Z
C1	Cer 0.0047μF -20+80Ω 100V	26383-321K
C2	Var cer 6pF - 22pF	26847-093S
C3	Cer 22pF 5% 50V	26343-469N
C4	Cer 220pF 2% 50V	26343-481S
C5	Cer 220pF 2% 50V	26343-481S
C6	Cer 0.0047μF -20+80% 100V	26383-321K
C7	Cer 0.0047μF -20+80% 100V	26383-321K
D1	BB142	28381-097W
IC1	μA741C	28461-313B
R1	Met film 27kΩ 2% ¼W	24773-307K
R2	Met film 27kΩ 2% ¼W	24773-307K
R3	Met film 2.2kΩ 2% ¼W	24773-281Y
R4	Met film 2.2kΩ 2% ¼W	24773-281Y
R5	Thermistor 220kΩ 20% 25°C	25685-242W
R6	Met film 270Ω 2% ¼W	24773-259T
R7	Met film 1.5Ω 2% ¼W	24773-205K
R8	Met film 47kΩ 2% ¼W	24773-307K
R9	Met film 47kΩ 2% ¼W	24773-307K
R10	Met film 2.2kΩ 2% ¼W	24773-281Y
R11	Met film 2.2kΩ 2% ¼W	24773-281Y
R12	Met film 68kΩ 2% ¼W	24773-313H
R13	Met film 680Ω 2% ¼W	24773-269K
R14	Met film 100kΩ 2% ¼W	24773-321L
TR1	BC308	28433-455R
TR2	2N4918	28434-896Y
TR3	BC238B	28452-780K
TR4	BC173C	28452-771P
XL1	10MHz	28312-043A

Miscellaneous mechanical parts

Wrap-round case	35901-943N
Case base plate (less handle assembly)	35901-942Y
Aperture plate for rear panel	35901-572V
Edging surround for case (1 of 2)	41700-179R
Tilt handle	37587-925L
Handle attachment	37588-110B
Case foot (1 of 2)	22315-663B
Earthing contact on side frame (1 of 2)	31559-005X
Buttress moulding, red, supporting display board (1 of 2)	37590-141G

Accessories

Mains lead, with straight 3-way socket	43123-076Y
Mains lead, with angled 3-way socket	43129-163L
Coaxial lead, with BNC plugs	43126-013W
Stowage lid for front panel, complete with clips	41690-158L
Retaining cover for stowage lid	35901-684M
Fixing stud for cover (1 of 2)	21186-362J
Rubber washer for fixing stud (1 of 2)	21186-362J
Rear stand	35901-686R
Hand strap	22315-578S
Shoulder strap	22315-577V

For symbols and abbreviations see introduction to this chapter

Chapter 7

Circuit diagrams

CIRCUIT NOTES

1. COMPONENT VALUES

Resistors : No suffix = ohms, k = kilohms, M = megohms.
Capacitors : No suffix = microfarads, p = picofarads.
Inductors : No suffix = henries, m = millihenries, μ = microhenries.
SIC : value selected during test; nominal value shown.

2. VOLTAGES

Voltages are d.c. and relative to chassis unless otherwise indicated. Measured with 20 kΩ/V meter.

3. SYMBOLS

Generally in accordance with BS 3939.

⚠ see CAUTION notes in Sects. 2.2 and 4.1.

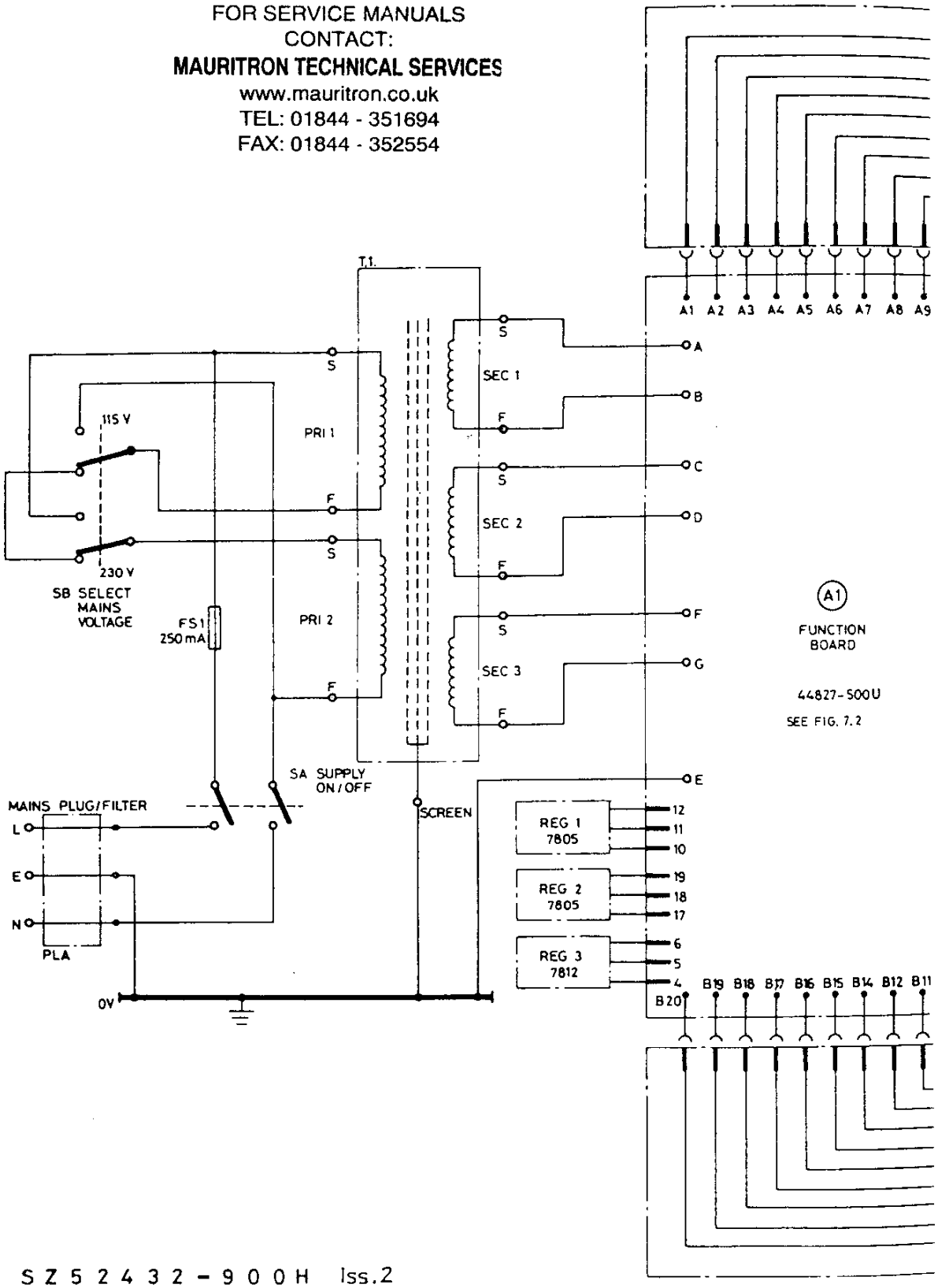

S Z 5 2 4 3 2 - 9 0 0 H Iss.2

(inc Z44827-637L Iss.1)

INTERCONNEC

2432-900 (1a)

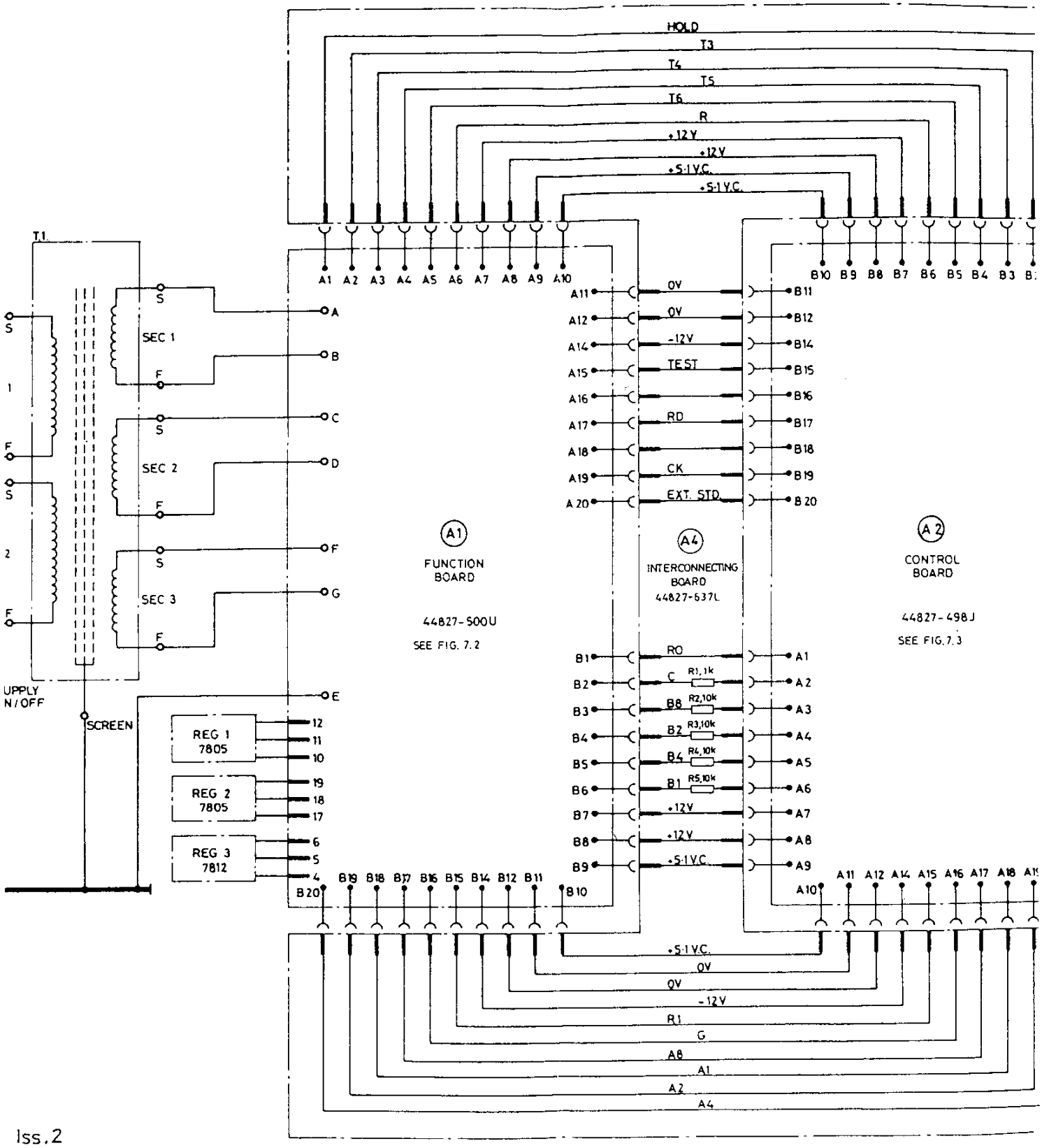

Iss.2

INTERCONNECTION DIAGRAM : A0

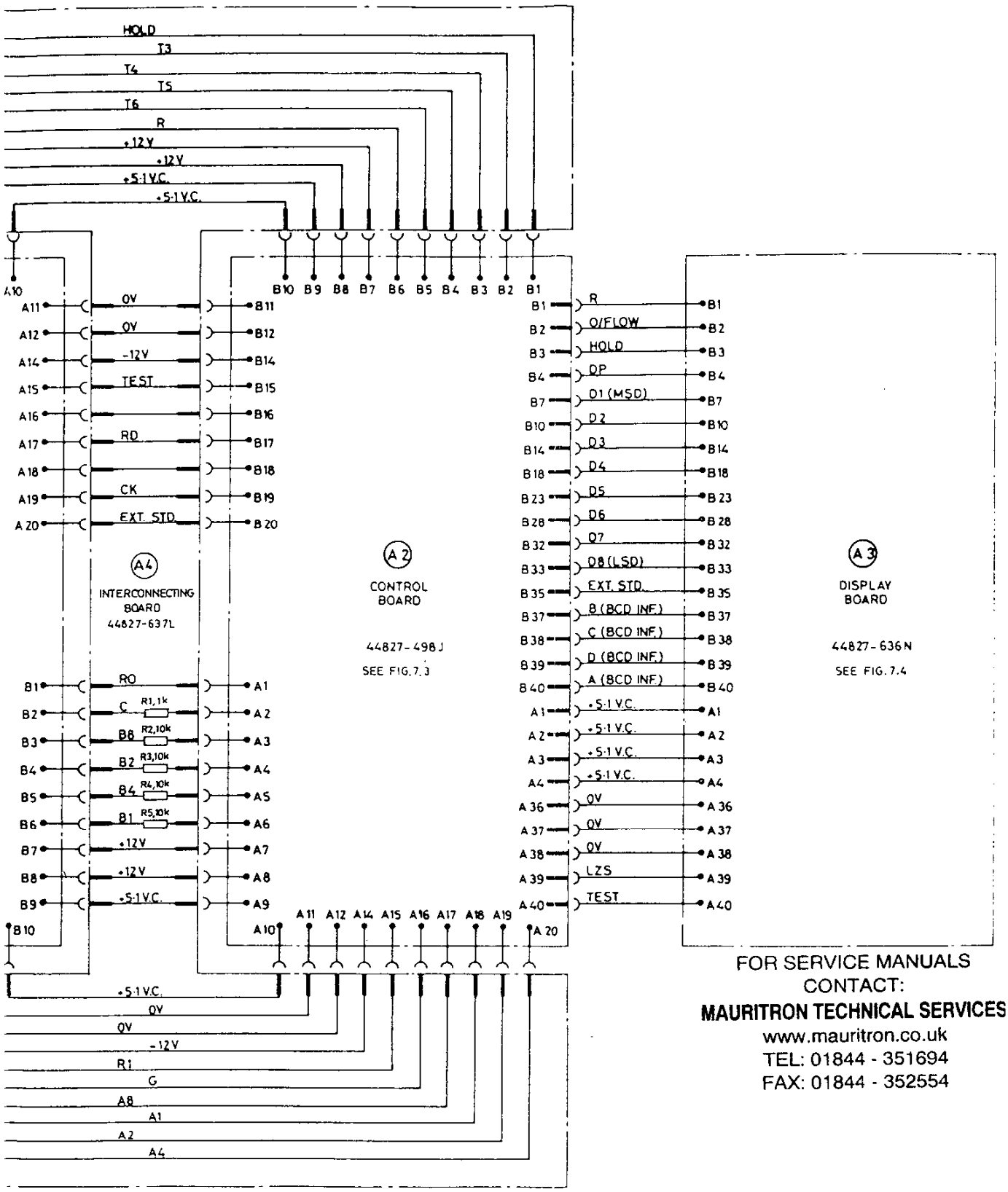

FOR SERVICE MANUALS
CONTACT:
MAURITRON TECHNICAL SERVICES
www.mauritron.co.uk
TEL: 01844 - 351694
FAX: 01844 - 352554

TION DIAGRAM : A0

Fig.7.1

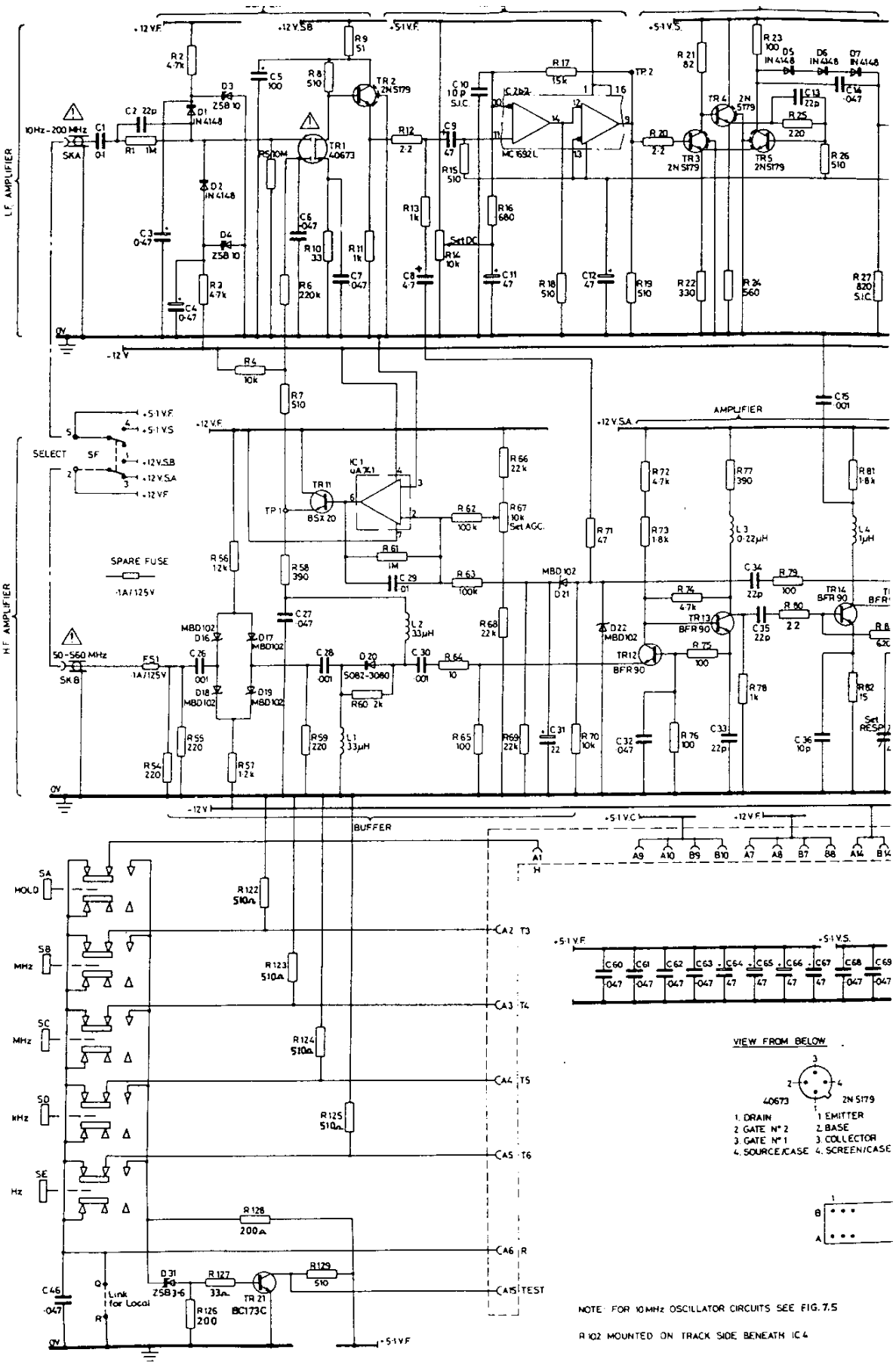

S Z 4 4 8 2 7 - 5 0 0 U Iss. 6

2432-900 (1b)

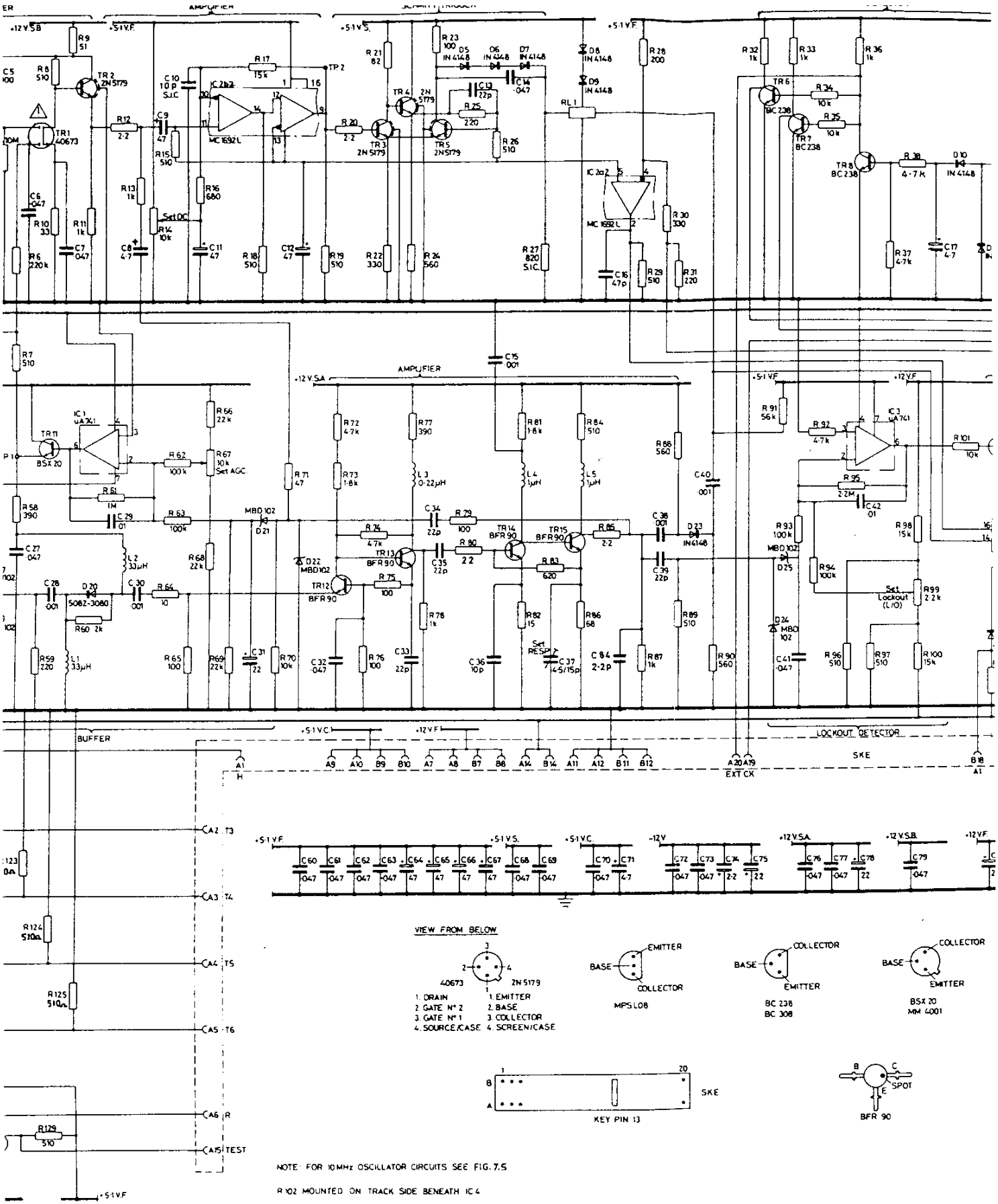

FUNCTION BOARD : A1

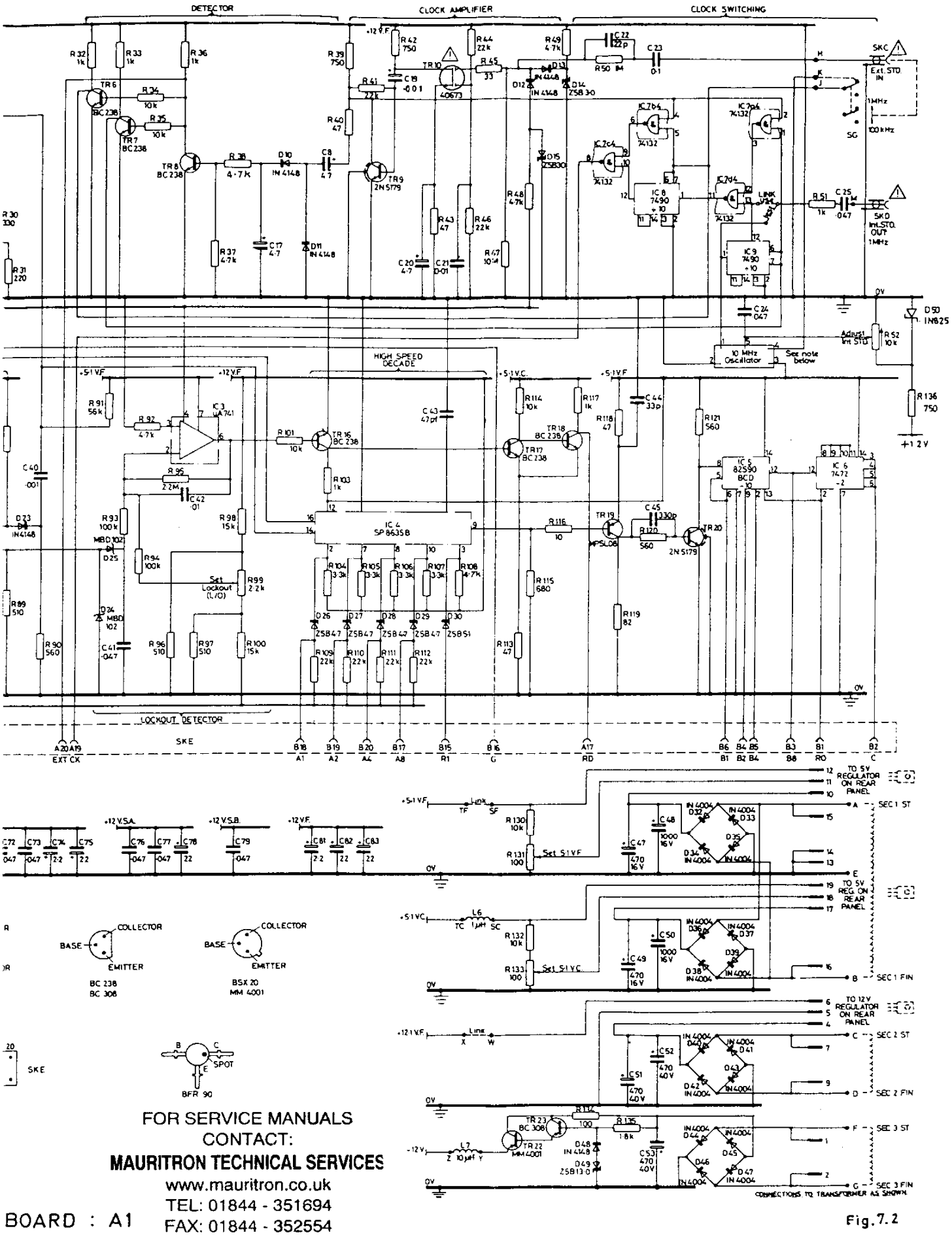

FOR SERVICE MANUALS
CONTACT:
MAURITRON TECHNICAL SERVICES
www.mauritron.co.uk
TEL: 01844 - 351694
FAX: 01844 - 352554

BOARD : A1

Fig.7.2

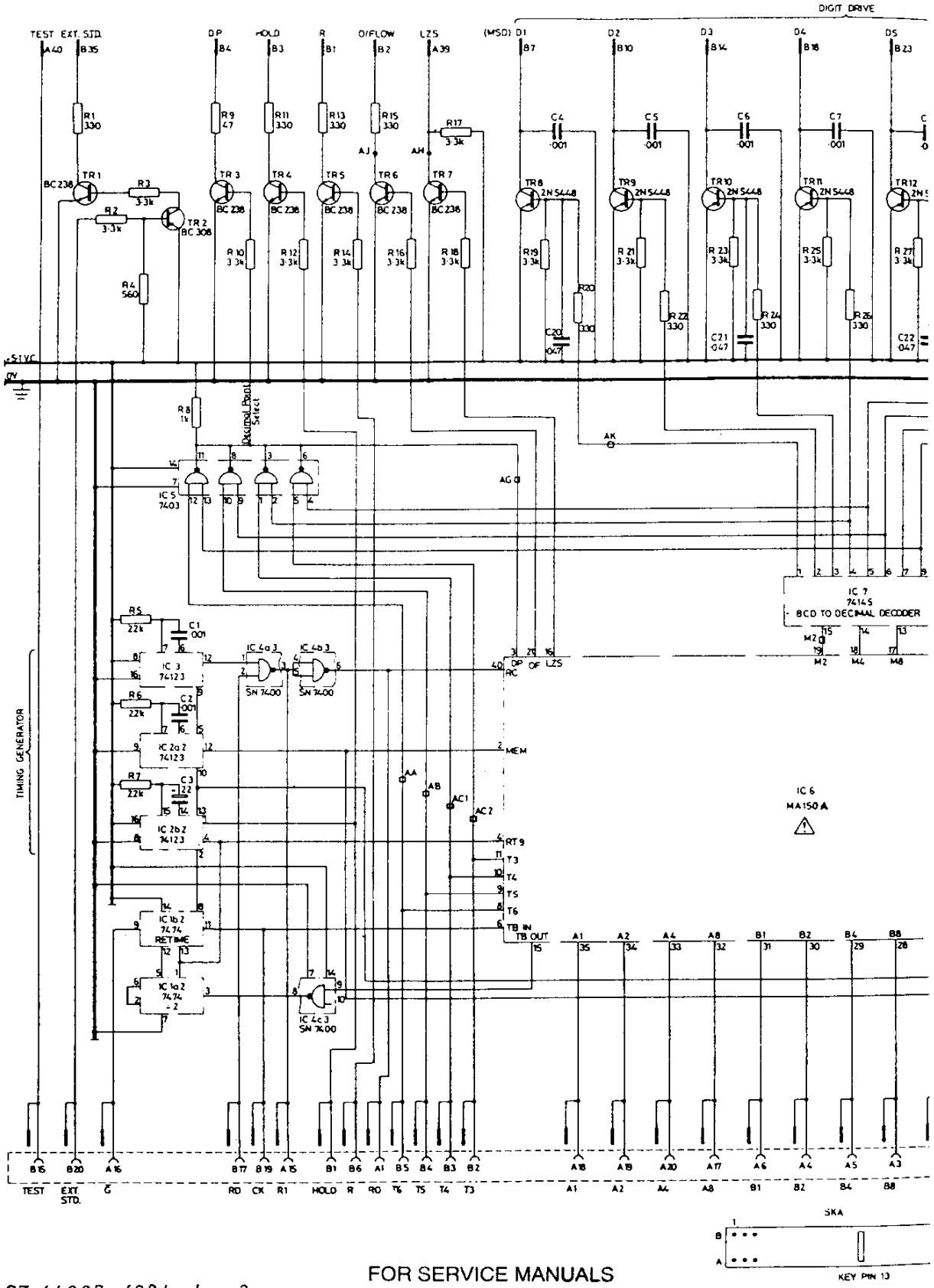

SZ 44827-498J Iss. 3

FOR SERVICE MANUALS
CONTACT:
MAURITRON TECHNICAL SERVICES
www.mauritron.co.uk
TEL: 01844 - 351694
FAX: 01844 - 352554

CONTROL BOARD

2432-900 (1b)

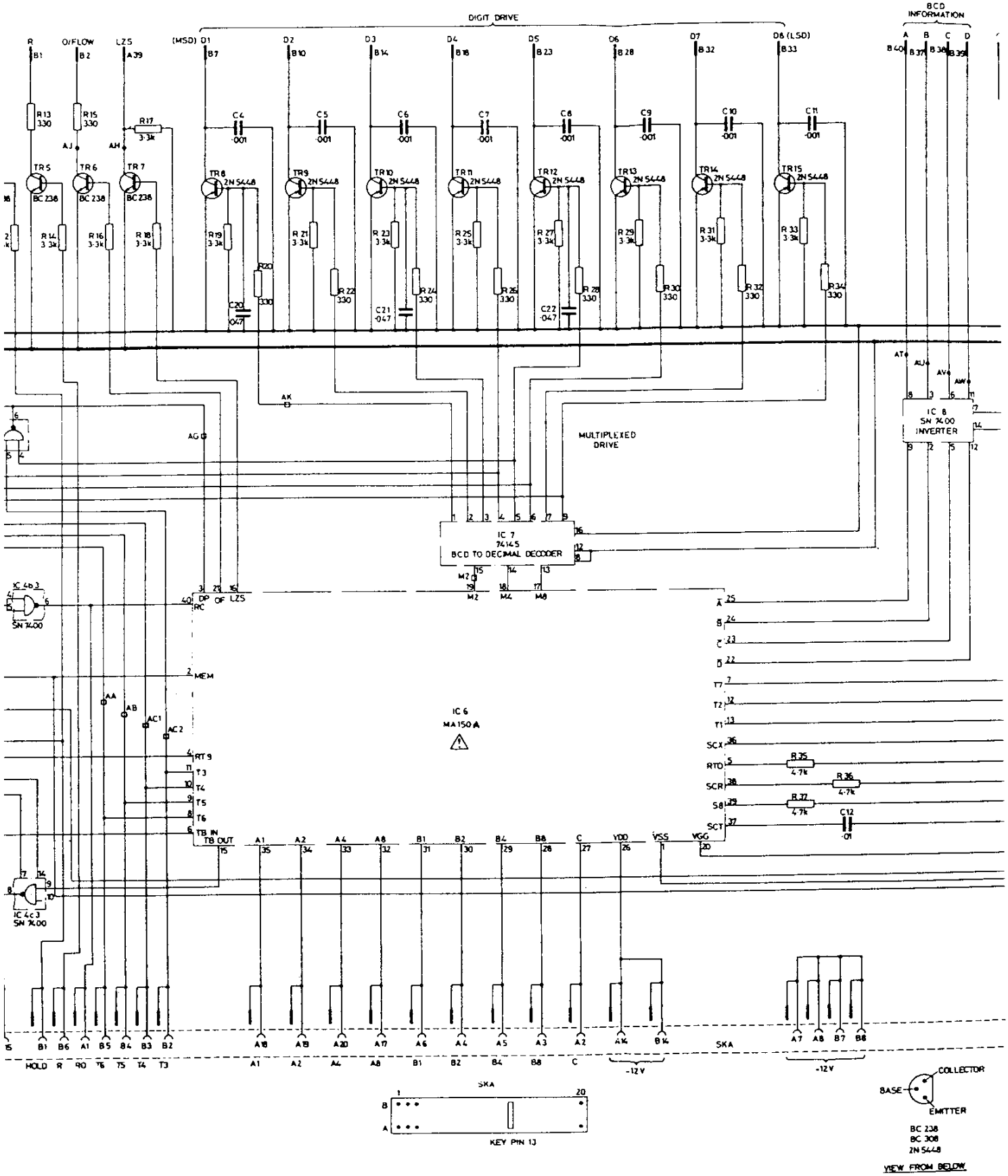

CONTROL BOARD : A2

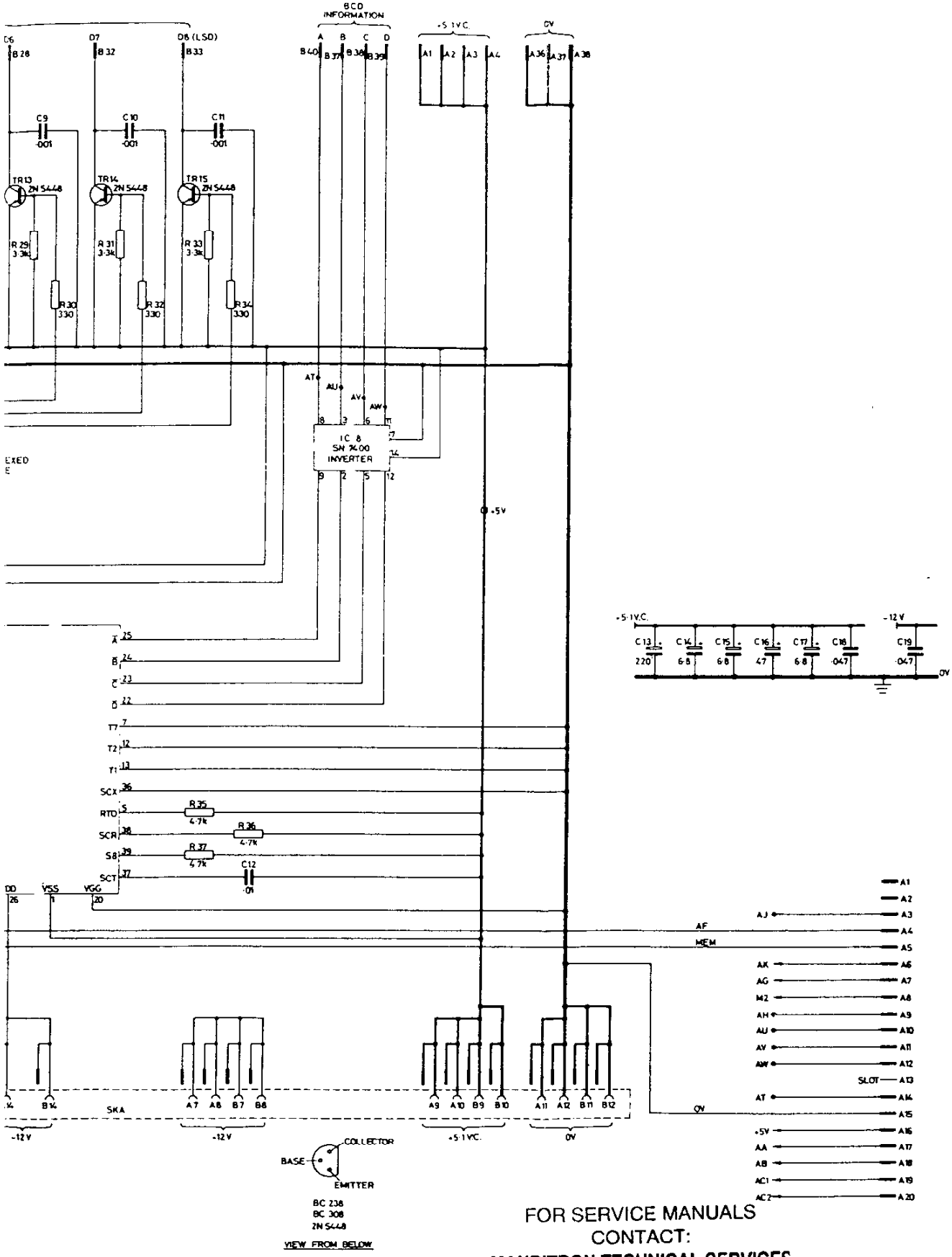

A2

Fig. 7.3

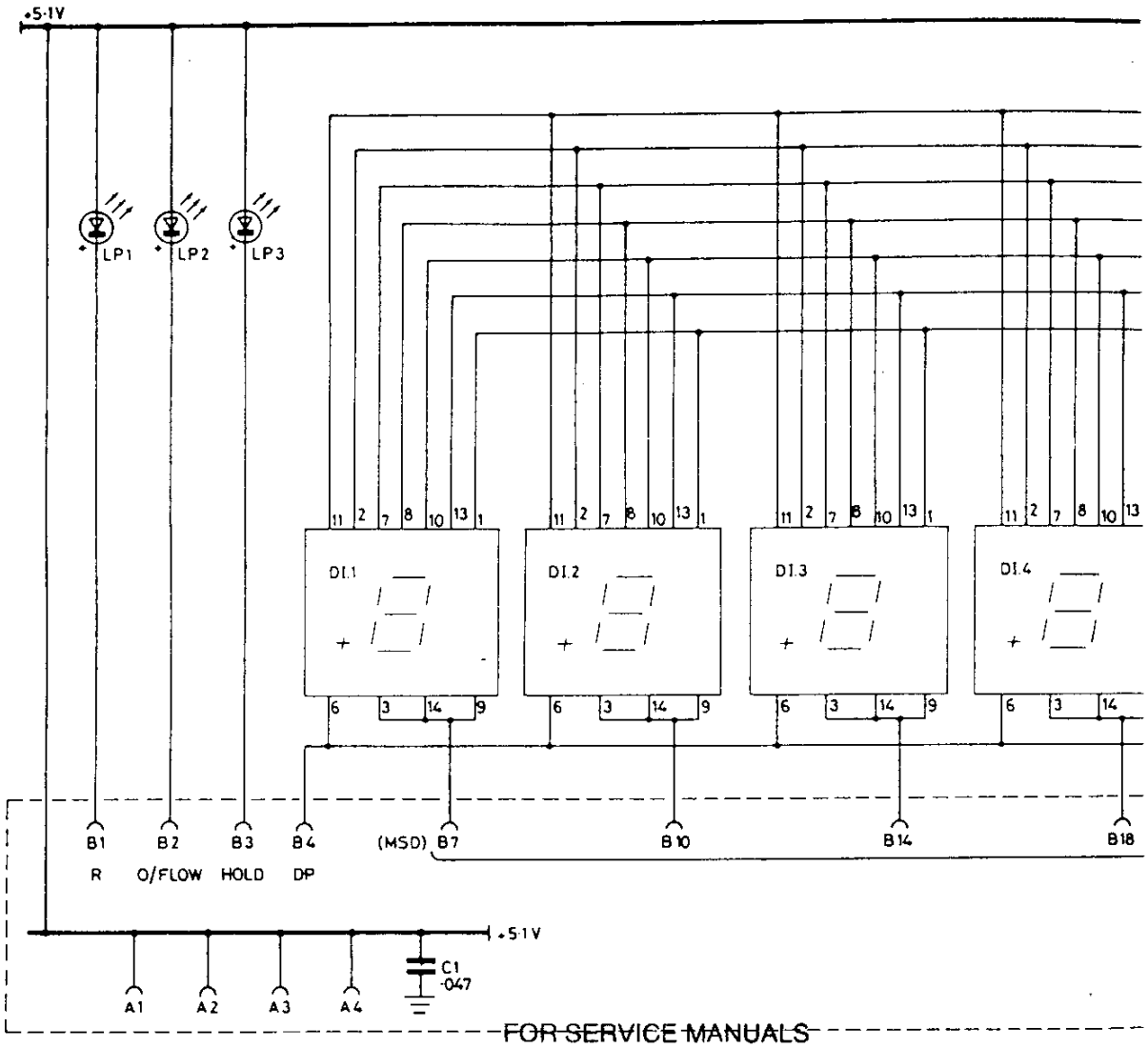

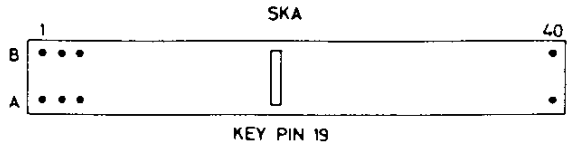

SZ44827-636N Iss.1

DI

2432-900 (1)

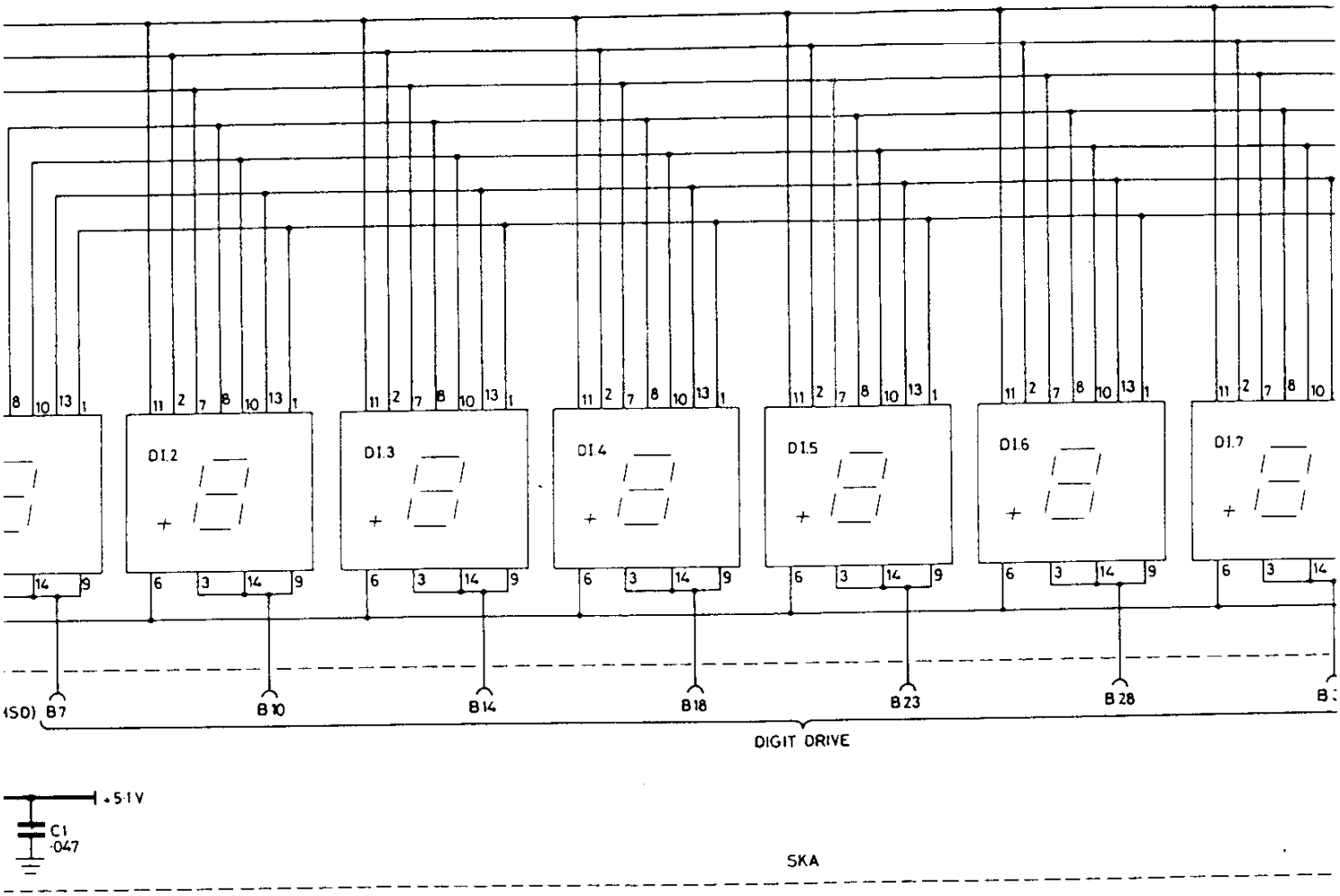

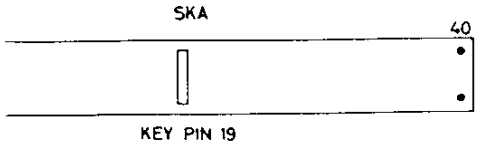

Iss.1

DISPLAY BOARD : A3

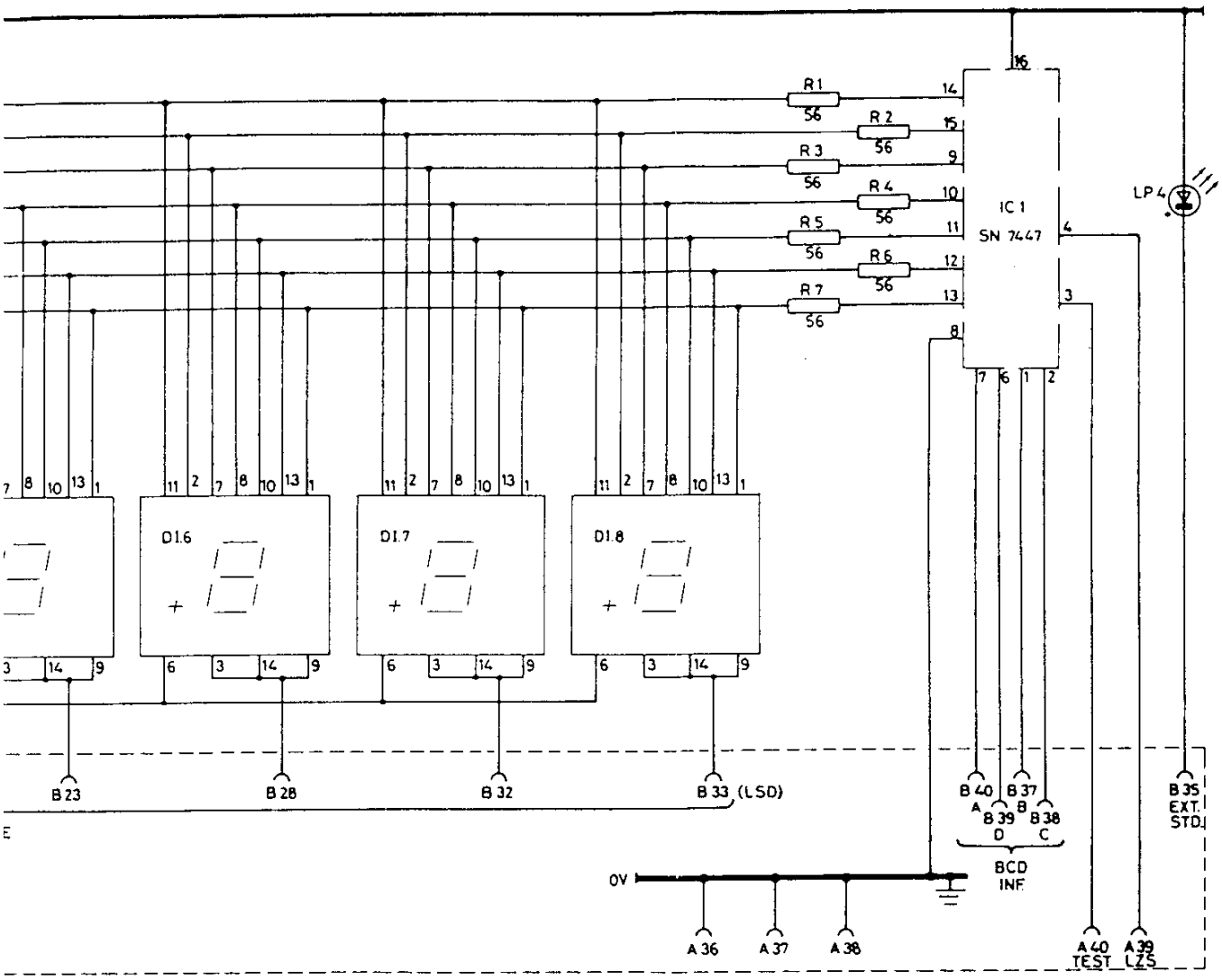

BOARD : A3

Fig.7.4

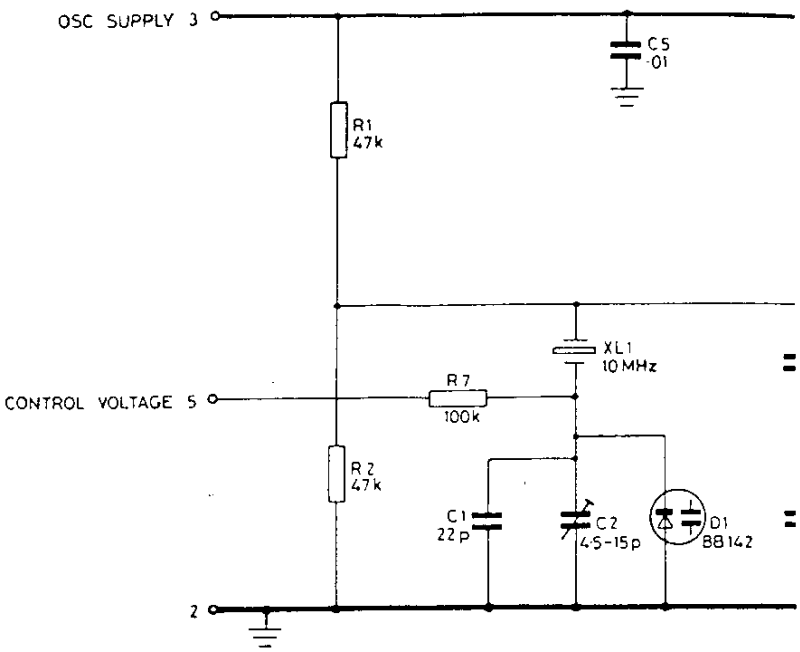

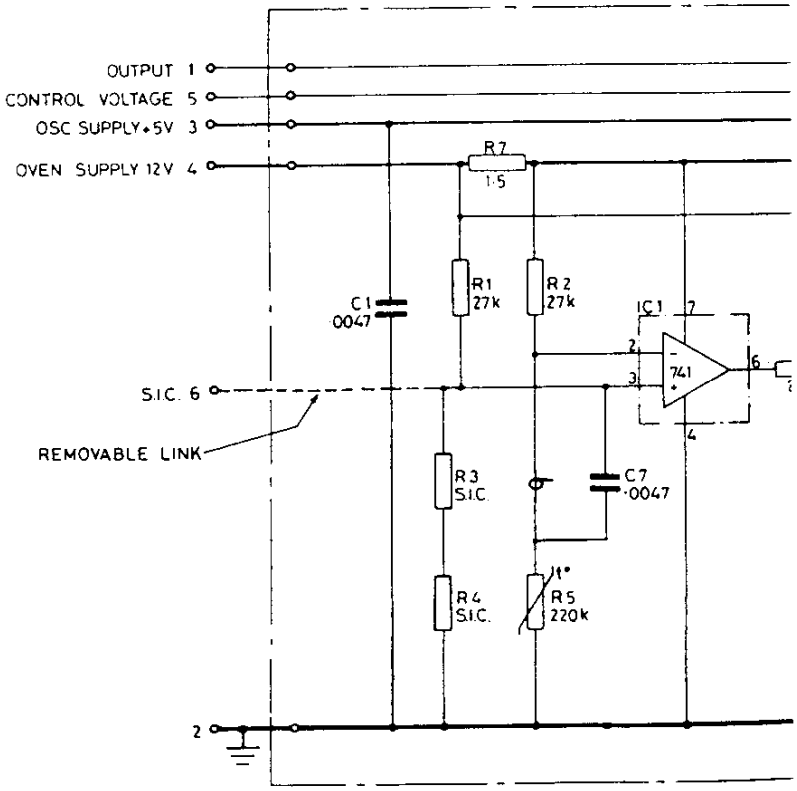

2432-900 (1a)

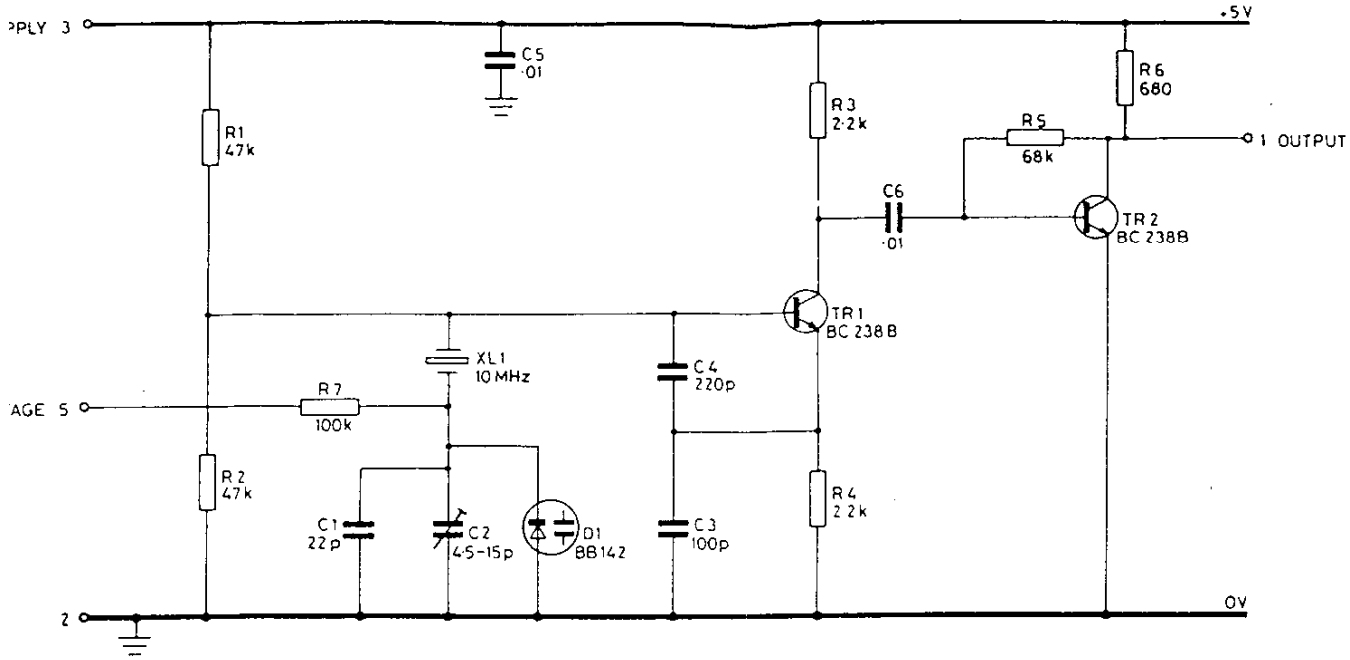

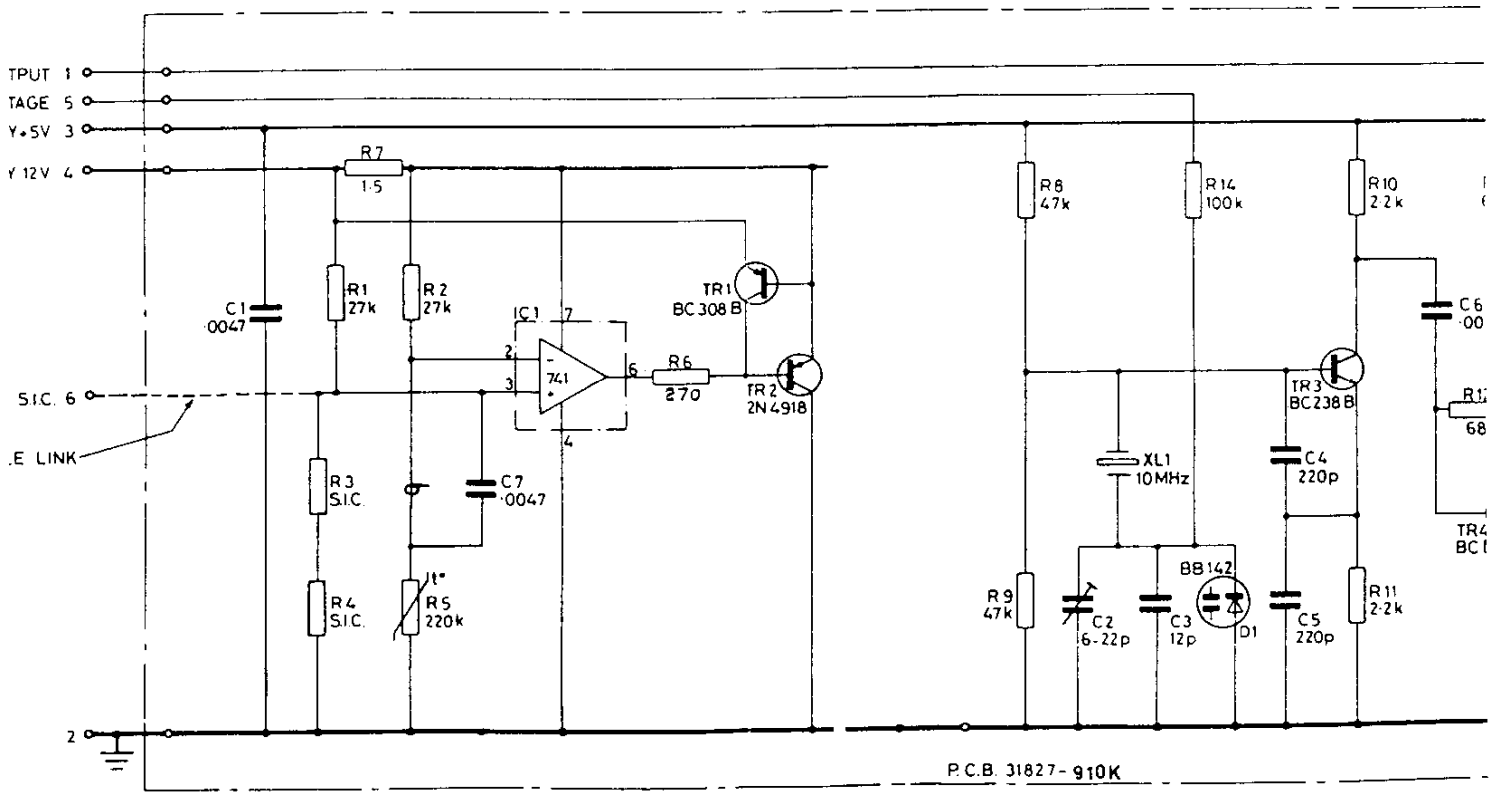

Indicates sleeved wire

10 MHz OSCILLATORS

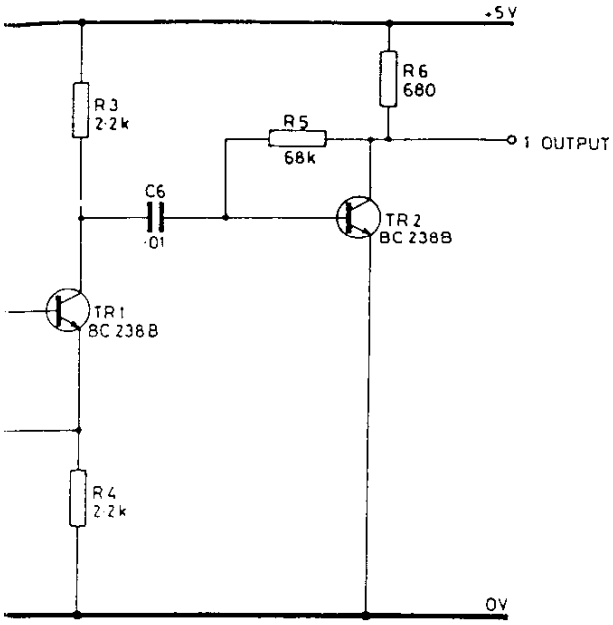

A10

SZ44827-563E
Iss.1

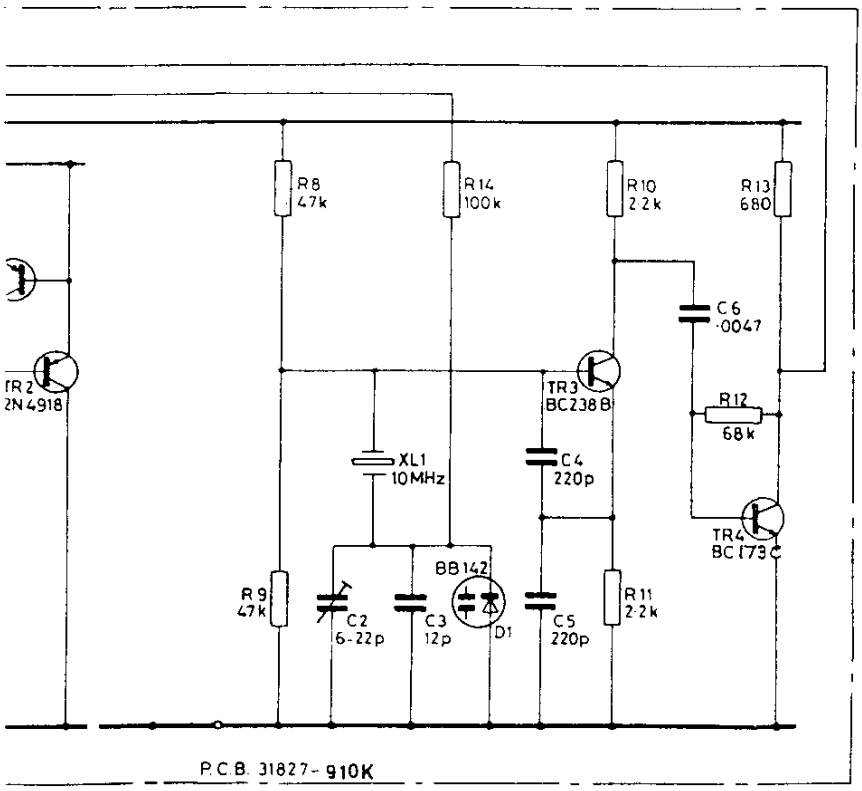

A11

SZ44990-195Z
Iss 1

Indicates sleeved wire

OSCILLATORS

Fig. 7.5