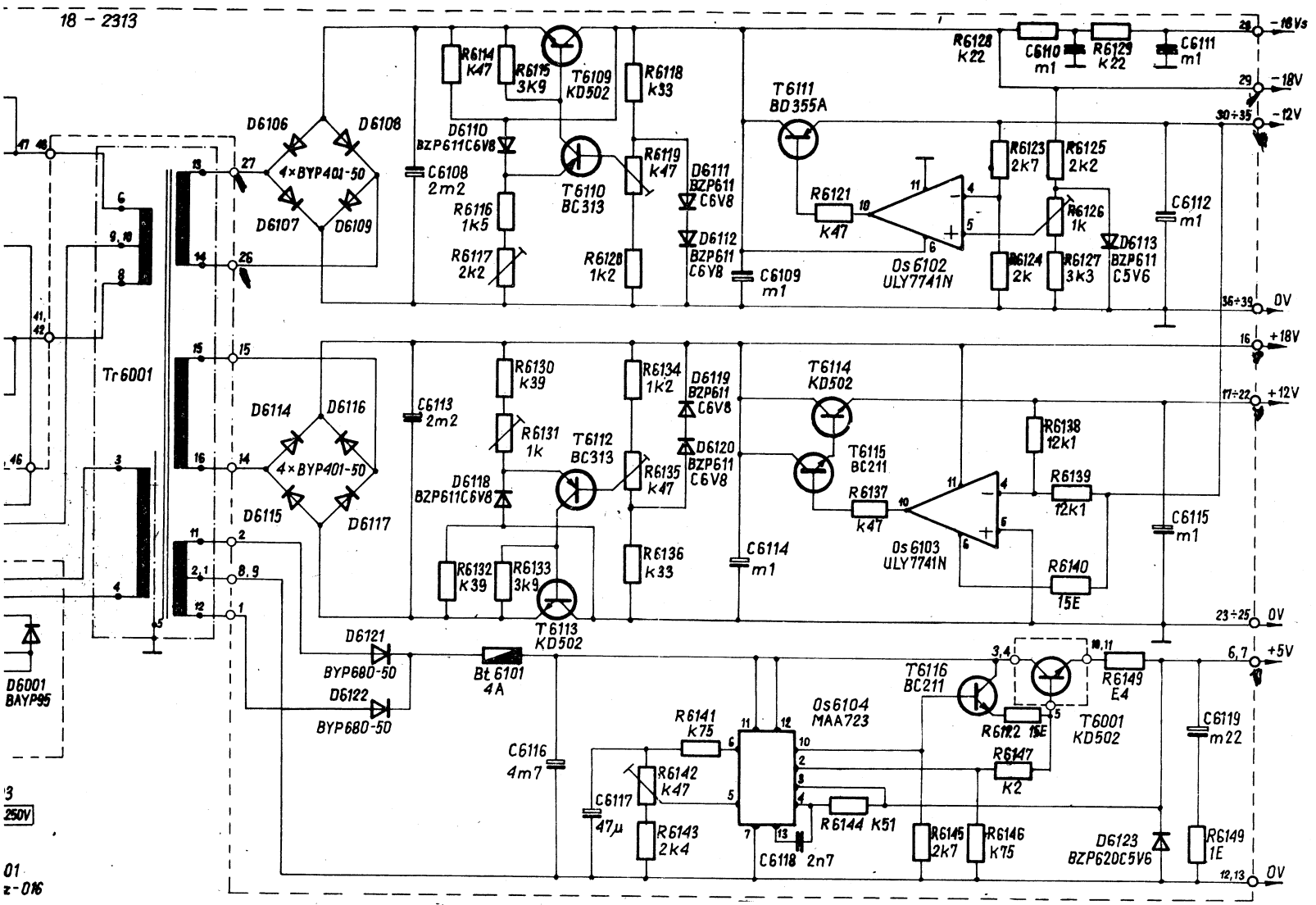

ZASILACZ

POWER SUPPLY

OT-327

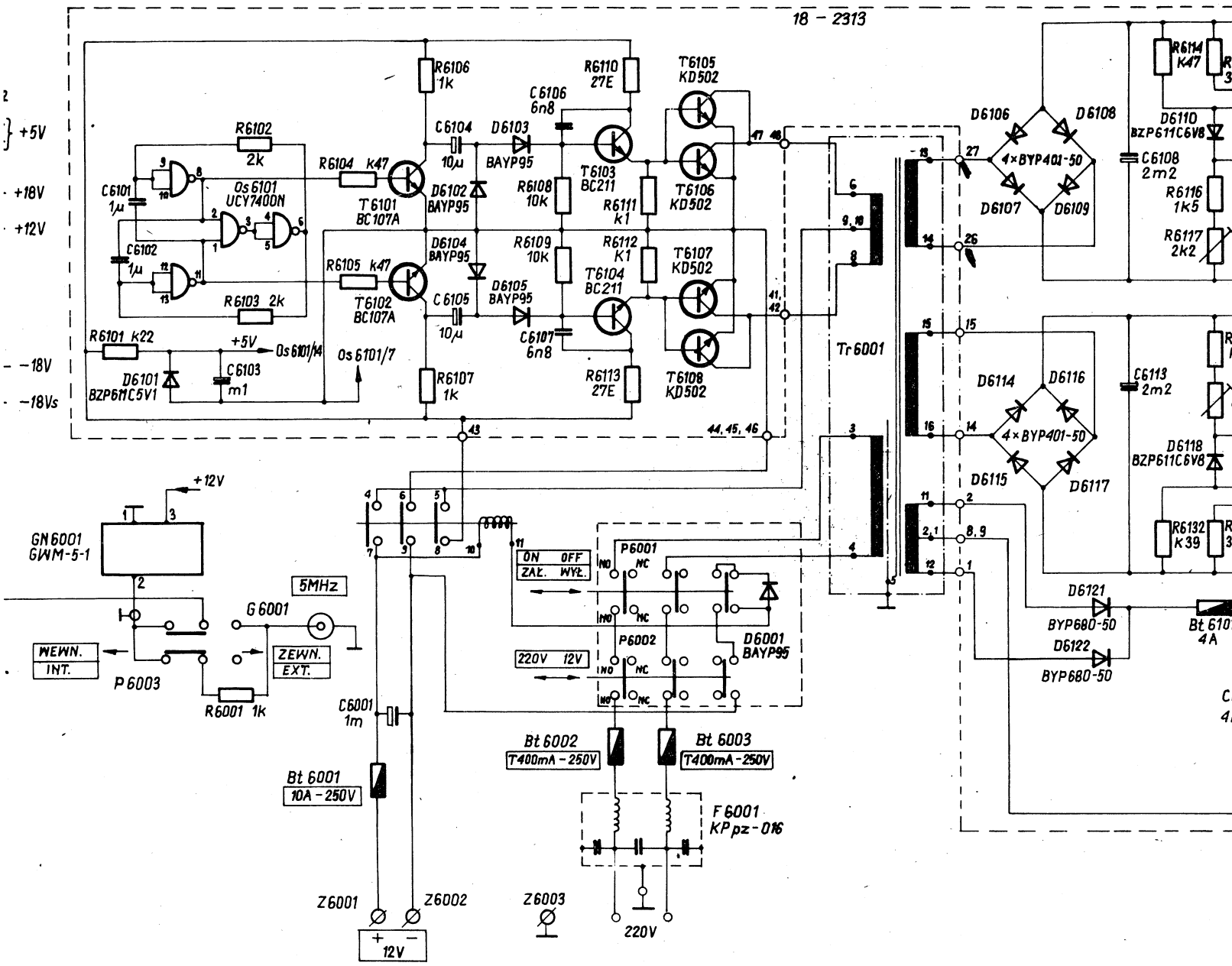
18 - 2313
+5V
+18V
+12V
-18V
-18Vs
R6102 2k
C6101 1µ
C6102 1µ
Os 6101 UCY7400N
R6103 2k
R6101 k22
D6101 BZP611C5V1
C6103 m1
+5V
Os 6101/14
Os 6101/7
R6104 k47
R6105 k47
T6101 BC107A
T6102 BC107A
R6106 1k
R6107 1k
C6104 10µ
C6105 10µ
D6102 BAYP95
D6104 BAYP95
D6103 BAYP95
D6105 BAYP95
C6106 6n8
C6107 6n8
R6108 10k
R6109 10k
R6110 27E
R6113 27E
R6111 k1
R6112 K1
T6103 BC211
T6104 BC211
T6105 KD502
T6106 KD502
T6107 KD502
T6108 KD502
Tr 6001
D6106
D6108
D6107
D6109
4×BYP401-50
D6114
D6116
D6115
D6117
4×BYP401-50
R6114 K47
D6110 BZP611C6V8
C6108 2m2
R6116 1k5
R6117 2k2
C6113 2m2
D6118 BZP611C6V8
R6132 K39
D6121 BYP680-50
D6122 BYP680-50
+12V
GN 6001 GWM-5-1
5MHz
G 6001
WEWN. INT.
ZEWN. EXT.
P 6003
R6001 1k
C6001 1m
Bt 6001 10A-250V
ON OFF
ZAŁ. WYŁ.
P6001
P6002
220V 12V
D6001 BAYP95
Bt 6002 T400mA-250V
Bt 6003 T400mA-250V
F 6001 KPpz-016
Z6001
Z6002
Z6003
12V
220V