7150plus Digital Voltmeter
MAINTENANCE MANUAL

Schlumberger Technologies
Instruments Division

Revised edition of scanned manual
10th November 2010

7150plus
Digital Multimeter

MAINTENANCE MANUAL

Issue 3 : August 1988 Part No. 71500026

Schlumberger

Schlumberger Technologies, Instruments Division,
Victoria Road, Farnborough, Hampshire, England GU14 7PW
Telephone: Farnborough (0252) 376666 Fax (0252) 543854 Telex: 858245 Schlmf G.

Schlumberger pursue a policy of continuous development and product improvement.
The specification in this document may therefore be changed without notice.

19©92

SOLARTRON 7150plus SERVICE MANUAL ADDENDUM

The first edition of this scanned manual was produced from an original printed manual in August 2009.

In November 2010 an error was identified in the first scanned section of page 2.13, page 25 of this manual, due to a drawing error in the original document.

For reference, the original incorrect section is shown below followed by the corrected section, which now matches that of the original model 7150.

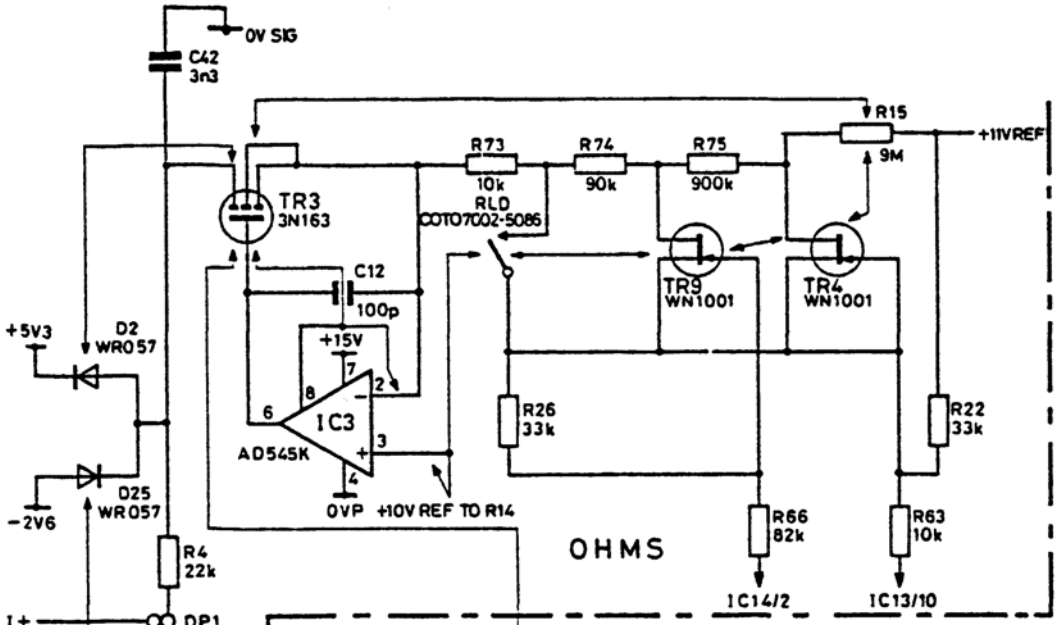

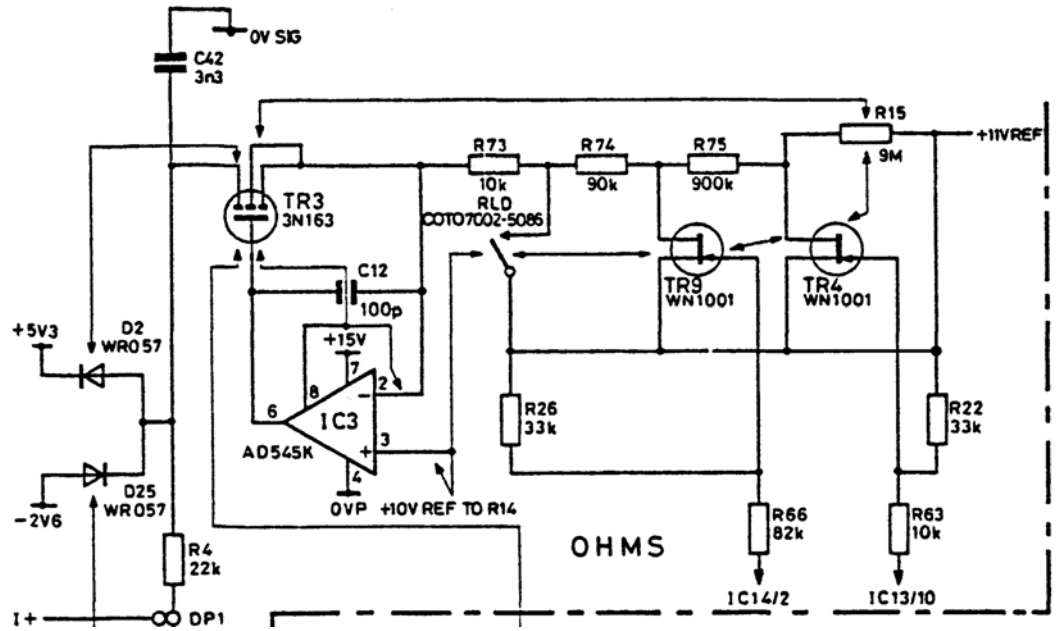

SAFETY PRECAUTIONS

The equipment described in this manual has been designed in accordance with IEC publication 348 (Class 1) Safety Requirements for Electronic Measuring Apparatus, and has been supplied in a safe condition. To avoid injury to an operator or service technician the safety precautions given below, and throughout the manual, must be strictly adhered to, whenever the equipment is operated, serviced or repaired. The equipment is designed soley for electronic measurement and should be used for no other purpose. Schlumberger accept no responsibility for accidents or damage resulting from any failure to comply with these precautions.

GROUNDING

To minimize the hazard of electrical shock it is essential that the equipment is connected to a protective ground whenever the power supply, measurement or control circuits are connected, even if the equipment is switched off. The protective ground for ac and dc supplies is connected separately.

AC GROUND is connected via the ac supply cord. The cord should be plugged into an ac line outlet with a protective ground contact. When an extension lead is used, this must also contain a ground conductor. Always connect the ac supply cord to the supply outlet before connecting the control and signal cables; and, conversely, always disconnect control and signal cables before disconnecting the ac supply cord. The ac ground connection should be capable of carrying the potential ac fault current, i.e. 6A.

DC GROUND is connected via a ground stud on the equipment power supply unit (PSU). This must be connected to a suitable ground, capable of carrying the potential dc fault current, i.e.35A.

Where both protective grounds are used it must be ensured that these grounds are, and will remain, at the same potential.

AC SUPPLY VOLTAGE

Before switching on the equipment ensure that the ac voltage selector is set to correspond with the local ac supply voltage. (See installation instructions in Operating Manual.)

Never operate the equipment from a line voltage or frequency in excess of that specified for the voltage selector setting used. Otherwise, the insulation of internal components may break down and cause excessive leakage currents.

FUSES

Before switching on the equipment check that the fuses accessible from the exterior of the equipment are of the correct rating. The rating of the ac line fuse must be in accordance with the voltage of the ac supply. (See installation instructions in operating manual.)

Should any fuse continually blow, do not insert a fuse of a higher rating. Switch the equipment off, clearly label it "unserviceable" and inform a service technician.

EXPLOSIVE ATMOSPHERES

NEVER OPERATE the equipment in a potentially explosive atmosphere. It is NOT intrinsically safe and could possibly cause an explosion.

Continued overleaf.

SAFETY PRECAUTIONS *(continued from previous page)*

SAFETY SYMBOLS

For the guidance and protection of the user, the following safety symbols appear on the equipment:

SYMBOL	MEANING
	Refer to operating manual for detailed instructions of use.
	Hazardous voltages.
	Protective conductor terminal. This must be connected to ground before operating the equipment.

NOTES, CAUTIONS AND WARNINGS

For the guidance and protection of the user, Notes, Cautions and Warnings appear throughout the manual. The significance of these is as follows:

NOTES	highlight important information for the reader's special attention.
CAUTIONS	guide the reader in avoiding damage to the equipment.
WARNINGS	guide the reader in avoiding a hazard that could cause injury or death.

AVOID UNSAFE EQUIPMENT

The equipment may be unsafe if any of the following statements apply:

- The equipment shows visible damage.
- The equipment has failed to perform an intended operation.
- The equipment has been subjected to prolonged storage under unfavorable conditions.
- The equipment has been subjected to severe physical stress.

If in any doubt as to the serviceability of the equipment, don't use it. Get it properly checked out by a qualified service technician.

LIVE CONDUCTORS

When the equipment is connected to its measurement inputs or supply, the opening of covers or removal of parts could expose live conductors. The equipment must be disconnected from all power and signal sources before it is opened for any adjustment, replacement, maintenance or repair. Adjustments, maintenance or repair, must be done only by qualified personnel, who should refer to the Maintenance Manual.

EQUIPMENT MODIFICATION

To avoid introducing safety hazards, never install non-standard parts in the equipment, or make any unauthorized modification. To maintain safety, always return the equipment to Schlumberger for service and repair.

Contents

Chapter		*Page*
1.	General Information	1.1
2.	Circuit Descriptions	2.1
3.	Setting-up and Calibration Procedures	3.1
4.	Disassembly and Assembly Procedures	4.1
5.	Parts Lists and Layout Diagrams	5.1
6.	Fault Diagnosis Guide	6.1

Chapter 1
General Information

Section		*Page*
1	General	1.3
2	Safety	1.3
3	Scheduled Maintenance	1.3
4	Accessories	1.4
5	Printed Circuit Boards	1.4
6	IEEE 488/GP-IB Operation	1.4
7	DMM - Summary of Operation	1.4

Fig.

1.1	7150plus Functional Block Diagram	1.5

1 GENERAL

The '7150plus' Digital Multimeter (DMM) is suitable for general-purpose bench applications and for systems use. It performs all common measurement functions and has a scale length in excess of 200000. The DMM has a built-in GP-IB Systems Interface which conforms with the internationally recognised IEEE 488 (1978) standard, thus ensuring the compatibility of 7150plus with a wide range of system devices produced both by Schlumberger and by other manufacturers.

The DMM is designed to be calibrated 'digitally', either via the front panel controls or via the GP-IB Interface. The DMM's built-in facilities obviate the need for special tools and mechanical strip-down, thus significantly reducing calibration down-time.

2 SAFETY

The 7150plus has been designed in accordance with the recommendations of IEC348. To ensure the user's safety and the continued safe operation of the DMM, the user is advised to read carefully the procedures and specifications given in the Operating Manual and this Maintenance Manual.

Care should always be exercised whenever the input leads are being connected or removed especially where high voltages are known to exist or high transients occur.

The DMM is protected against measurement overload, up to 1.2kV peak on voltage measurement and 240V rms on resistance measurements.

When using the DMM on equipment which is capable of delivering high voltages (eg, inductive circuitry giving high back-emfs) it is strongly recommended that the equipment under test is **not** switched off while the DMM is still connected. The DMM leads should be carefully disconnected before switching off the equipment, this will help to prevent the hazards of back-emfs. The following example illustrates this. Consider the inputs connected across the secondary of a large mains transformer. The very high input impedance of the DMM is such that in the event of the mains supply being interrupted, the resultant back emf induced in the undamped secondary could be in the order of 100kV. This is obviously hazardous to the user and would certainly damage the DMM. User safety may be preserved by the inclusion of a switch between the DMM and the transformer secondary. The switch could then be switched on and off while the transformer remained powered.

Whenever it is likely that the safety of the DMM has been impaired - eg, if it shows visible signs of damage, if it fails to perform correctly, or if the specifications have been exceeded in any way - it should be made inoperative and referred to a suitable repair depot.

Any maintenance, adjustment or repair of the DMM must only be carried out by skilled personnel. Such adjustment, maintenance or repair should be carried out in accordance with the procedures and precautions detailed in this Maintenance Manual.

3 SCHEDULED MAINTENANCE

The DMM should be calibrated annually (see Chap. 3 of this manual for calibration details). No further scheduled maintenance is necessary.

4 ACCESSORIES

The following accessories may be used with the DMM:

Radio Frequency Probe (Part No.70457F)
High Voltage Probe (Part No.70457E)
10A Current Shunt (Part No.70457X)
Temperature Probes:
Insertion Probe (71517A)
Surface Probe (71517B)
Rack Mounting Kit (Part No.71501)

Instuctions in the use of the accessories and for fitting the Rack Mounting Kit are given in the associated Operating Manual, Part No.71500024

5 PRINTED CIRCUIT BOARDS

The following three printed circuit boards, identified respectively as pcbs 1, 22 and 3, are fitted to the DMM:

Pcb 1 - Floating Analog and Logic , Part No. 71510501.
Pcb 22 - Earthy Logic , Part No. 71500522
Pcb 3 - Display and Keyboard, Part No. 71500503.

There is no separate pcb for the dc power supplies, this circuit is distributed between pcb 1, pcb 22 and the rear panel. A circuit diagram of the dc power supplies is given in Chapter 2.

6 IEEE 488/GP-IB OPERATION

The operation of the DMM in conjunction with the IEEE 488 interface bus is described in the 7150plus operating manual. Part 2 of the operating manual contains example programs for controlling the DMM using various types of controller.

7 DMM - SUMMARY OF OPERATION

A functional block diagram of the DMM is shown in Fig 1.1. The 'pulse-width' analog-to-digital (A-to-D) conversion technique is used in the DMM. The DMM is basically a voltage measuring instrument. The resistance and current range inputs are converted to a dc voltage and suitably scaled in the signal conditioning circuits prior to A-to-D conversion. The input analog and A-to-D conversion circuits are contained in the 'floating' section of the DMM.

The A-to-D converter produces two balanced pulse trains at its output. Any measured input causes the pulse width of one of the trains to increase, with a proportionate decrease in the width of the other. These outputs, converted into a single pulse train and synchronised to clock, are used to gate clock into a reversible counter within the MPU. The nett result is a count which is proportional to the measure of input.

Power supplies for the DMM are derived from conventional mains operated dc supplies.

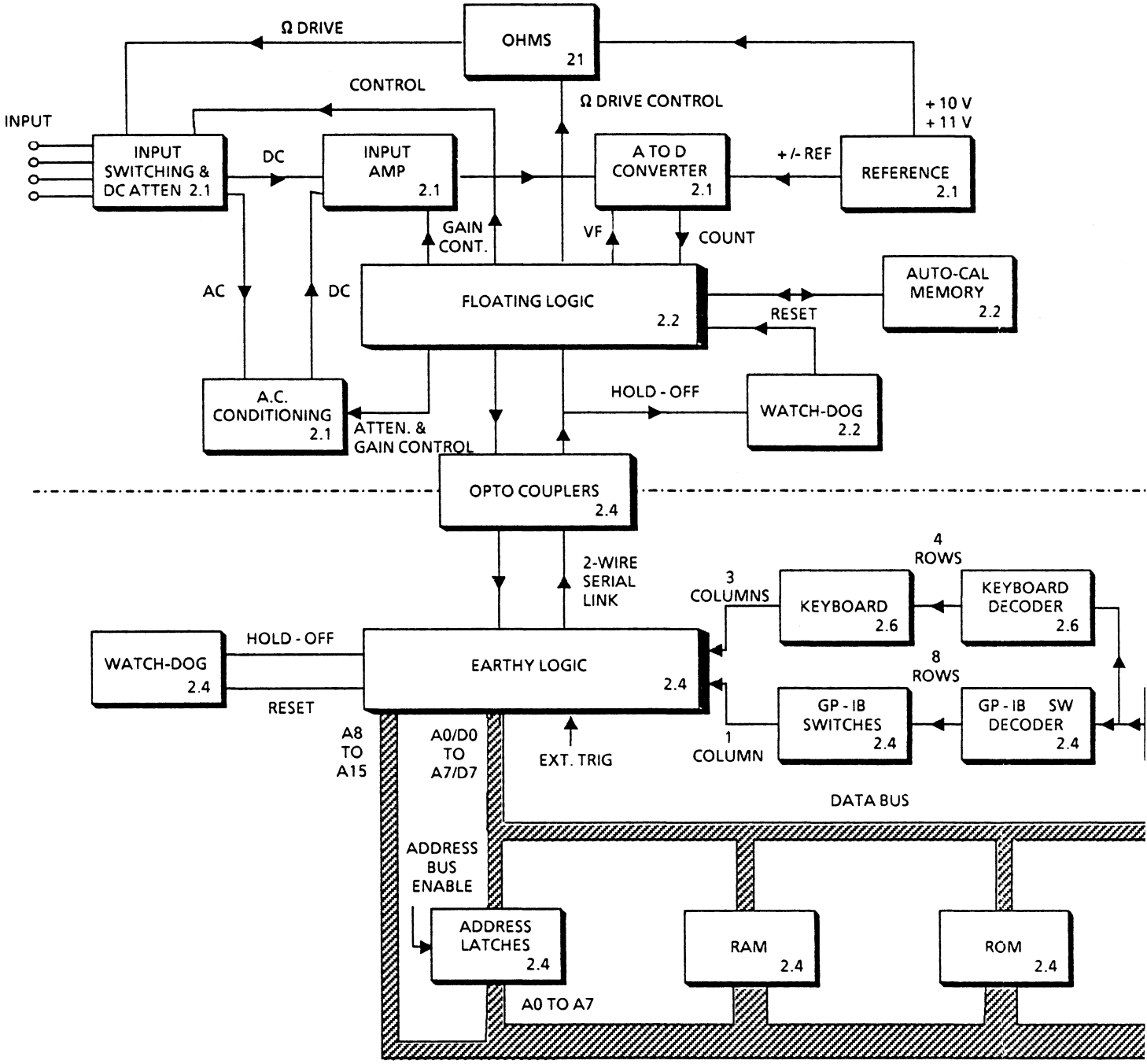
Ω DRIVE
OHMS
21
CONTROL
Ω DRIVE CONTROL
+ 10 V
+ 11 V
INPUT
INPUT SWITCHING & DC ATTEN 2.1
DC
INPUT AMP 2.1
A TO D CONVERTER 2.1
+/- REF
REFERENCE 2.1
GAIN CONT.
VF
COUNT
AC
DC
FLOATING LOGIC 2.2
AUTO-CAL MEMORY 2.2
RESET
A.C. CONDITIONING 2.1
ATTEN. & GAIN CONTROL
HOLD - OFF
WATCH-DOG 2.2
OPTO COUPLERS 2.4
2-WIRE SERIAL LINK
4 ROWS
3 COLUMNS
KEYBOARD 2.6
KEYBOARD DECODER 2.6
8 ROWS
WATCH-DOG 2.4
HOLD - OFF
EARTHY LOGIC 2.4
RESET
GP - IB SWITCHES 2.4
GP - IB SW DECODER 2.4
1 COLUMN
A8 TO A15
A0/D0 TO A7/D7
EXT. TRIG
DATA BUS
ADDRESS BUS ENABLE
ADDRESS LATCHES 2.4
RAM 2.4
ROM 2.4
A0 TO A7

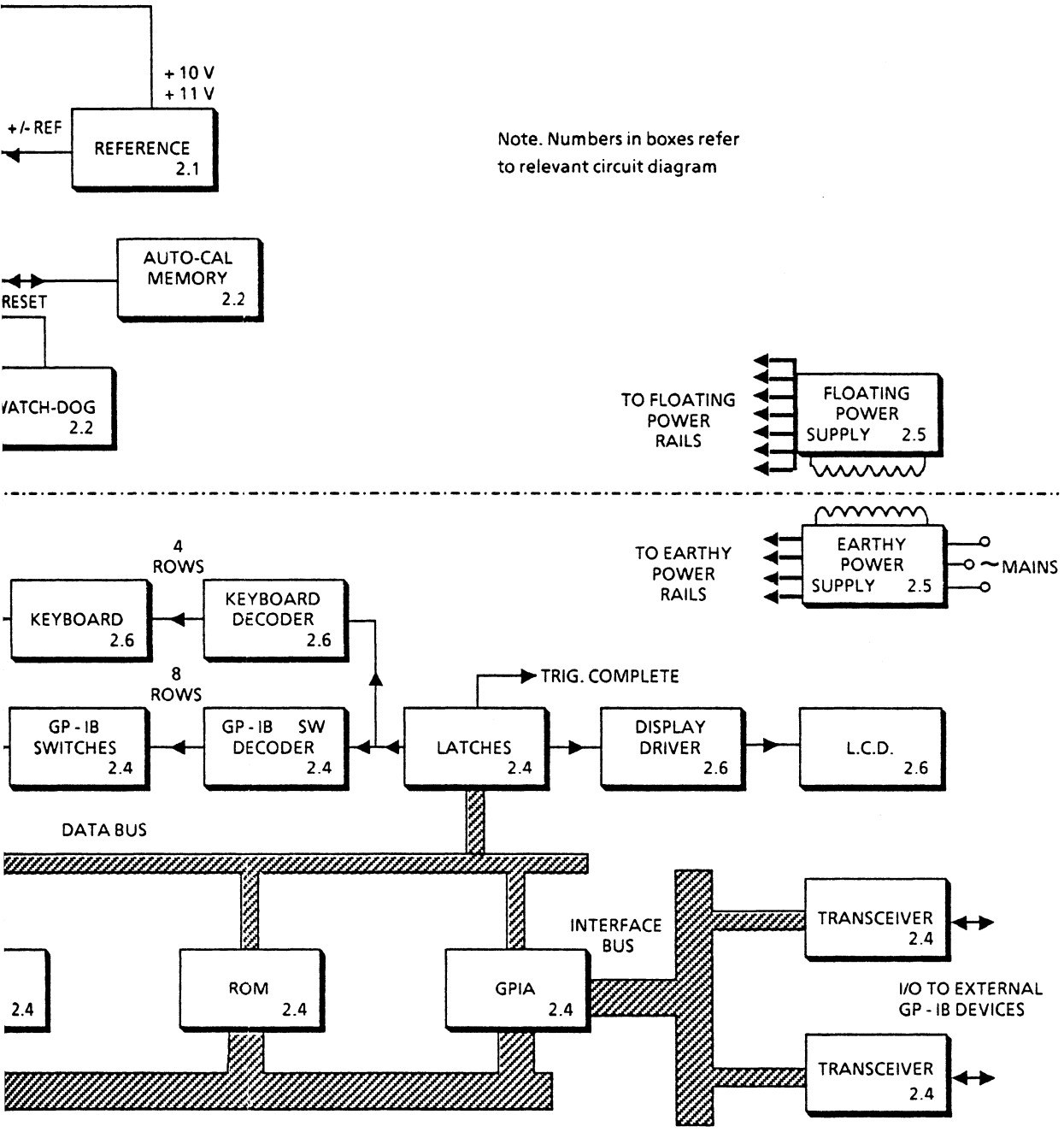

Fig 1.1 *7150plus FUNCTIONAL BLOCK DIAGRAM*

Chapter 2
Circuit Descriptions

Section		*Page*
1	DC Voltage Measurement (Diag 2.1)	2.3
1.1	Signal Conditioning	2.3
1.2	Input Switching	2.3
2	AC Voltage Measurement (Diag 2.1)	2.4
2.1	Signal Conditioning	2.4
2.2	AC-DC Conversion	2.4
3	Resistance Measurement (Diag. 2.1)	2.5
3.1	Current Generator Circuit	2.5
3.2	Four - Wire Resistance Checks	2.5
3.3	Input Protection	2.5
4	Current Measurement (Diag 2.1)	2.6
4.1	DC Current Input	2.6
4.2	AC Current Input	2.6
4.3	Protection	
5	Input Amplifier (Diag 2.1)	2.7
5.1	Drift Correct	2.7
5.2	Input Protection	2.8
6	A-to-D Converter (Diag 2.1)	2.8
6.1	The Integrator	2.8
7	Reference Supply (Diag 2.1)	2.8
8	Floating Logic (Diag. 2.2)	2.9
8.1	Analog Control Lines	2.9
8.2	Forcing Waveform	2.9
8.3	Counting Circuit	2.9
8.4	Non-Volatile Memories	2.9
8.5	Floating Logic Reset Watchdog	2.9
9	Earthy Logic (Diag 2.3)	2.10
9.1	MPU Set	2.10
9.2	GP-IB Interface	2.10
9.3	Address Decoders	2.10
9.4	Reset Watchdog	2.10
10	Display and Keyboard (Diag 2.4)	2.11
10.1	Display	2.11
10.2	Keyboard	2.11

Contd.

Section		*Page*
11	Power Supplies (Diag 2.5 and 2.6)	2.12
11.1	Mains Power Input Unit	2.12
11.2	Cal. Enable	2.12

Diag.

2.1	PCB 1, Floating Analog	2.13
2.2	PCB 1, Floating Logic	2.15
2.3	PCB 1, Floating Analog Power Supplies	2.17
2.4	Pcb 22, Earthy Logic	2.19
2.5	Earthy Power Supplies	2.21
2.6	PCB 3, Display and Keyboard	2.23

1 DC VOLTAGE MEASUREMENT (Diag. 2.1)

All DMM inputs, including dc voltage inputs, are processed by the Analog-to-Digital Converter (ADC). The operating range of the ADC is limited to ±2.6V. The measurement range of the DMM is extended beyond these limits by scaling all inputs to the 2 volt range. For example, a 200V input scaled by a factor of 0.01 would be seen by the ADC as only 2V.

In practice scaling (or signal conditioning) is a two-stage operation performed by the dc input attenuator (for dc volts) and the input amplifier IC1A. The input amplifier is described on page 2.7.

The dc voltage input circuit has two main functions:

1. Signal conditioning,
2. Input switching, to the input amplifier.

1.1 SIGNAL CONDITIONING

The dc voltage input attenuator consists of resistors , R1A to R1D. The attenuator is switched by FETs TR7, TR8 and relay RLK in response to range control inputs from the floating logic. The attenuator setting, either x 1, x 0.01 or x 0.001, depends upon the selected voltage range ie:

Range (V)	Attenuation	Circuit Path
0.2	x 1	Direct to Input Amp via RLB contact
2.0	x 1	(as above)
20	x 0.01	RLK contact, TR7, with RLB contact open
200	x 0.01	(as above)
1000	x 0.001	RLK contact and TR8, with RLB contact open

The attenuated outputs are amplified by the input amplifier. The gain of the amplifier is arranged to be either x 1 or x 10 in order to ensure satisfactory scaling at the ADC.

1.2 INPUT SWITCHING

DC voltage inputs to the input amplifier are selected via series FET TR5. When TR5 is ON, shunt FET TR6 is OFF and vice versa. TR6 is switched ON during ac voltage or current measurement and also during dc current measurement. (An additional function of TR6 - during a 'drift correct' - is described on page 2.7) .

2 AC VOLTAGE MEASUREMENT (Diag. 2.1)

In Vac operating mode, inputs are first scaled to the 2 volt range by the ac signal conditioning circuits and then converted into a dc voltage. Mode control signals then switch the converted output to the dc input amplifier. A-to-d conversion follows in the manner described on page 2.8.

2.1 SIGNAL CONDITIONING

AC voltage signal conditioning is performed by the ac input attenuator and by Operational Amplifier IC15. The attenuator is switched by IC18, TR1 and TR2. The gain of IC15 is set via IC18 to be either x 1 or x 10.

For inputs on the lower two ranges (0.2V and 2V) no conditioning is required. Quad analog switch IC18 selects the gain of IC15 (via matched resistors R21A and R21B) to be at unity, with inputs to the amplifier connected direct via RLA, RLE, and RLF contacts. The overall circuit gain for other input ranges is selected by TR1 and IC18 in response to range and control inputs from the floating logic. Details are as follows:

Range (V)	Attenuation	Amp I/P (V)	Gain	Amp O/P (V)
0.2	x 1	0.2	x 10	2.0
2.0	x 1	2.0	x 1	2.0
20	x 0.01	0.2	x 10	2.0
200	x 0.01	2.0	x 1	2.0
1000	x 0.001	1.0	x 1	1.0

2.2 AC-DC CONVERSION

AC to DC conversion is carried out by true rms-to-dc converter IC21. The maximum 2V output from this IC is switched to the dc input amplifier IC1 via the shunt input FET TR6 via quad analog switch IC5.

3 RESISTANCE MEASUREMENT (Diag. 2.1)

Resistance measurement is achieved by measuring the voltage developed across the unknown resistance when a known current is passed through it. The resultant voltage is then measured by the dc voltage measurement circuit.

3.1 CURRENT GENERATOR CIRCUIT

IC3 is a precision operational amplifier which is connected to +10 volts from the reference supply circuit. The other amplifier input is a +11 volts reference supply. Thus IC3 will drive TR3 to maintain a 1 volt differential across R73, R74, .R75 and R15.

Control inputs from the logic circuitry switch this resistor chain (via TR4, TR9 and RLD) to define one of four test currents. The test current made available depends upon the selected resistance range, ie:.

Nominal Range	Test Current
20MΩ	100ηA
2MΩ	1μA
200kΩ	10μA
20kΩ	100μA
2kΩ	100μA

3.2 FOUR-WIRE RESISTANCE CHECKS

During four-wire resistance checks, all of the current available at the Hi Ω Source terminal should be returned to source via the LO Ω Source terminal.

On the lower resistance ranges (2MΩ, 200kΩ, 20kΩ and 2kΩ) the logic control, via IC2, also switches the resistor chain R7, R27 and R56 which is connected to the Lo source terminal and to the -3V reference supply. This part of the circuit acts as a calibrated current sink for the test current generator.

3.3 INPUT PROTECTION

Input protection for the resistance measurement circuit is provided by resistor R4 (22kΩ) which is in series with both I+ and V+ input terminals. Diodes D2 and D25 limit the voltage at the junction of TR3 and R4 to +5.3 and –2.6V

4 CURRENT MEASUREMENT (Diag. 2.1)

Current measurement is achieved by measuring the potential across a known resistance when the current to be measured flows through it. The voltage thus obtained is measured by the dc input amplifier either direct, or for ac inputs, via the AC-DC converter.

4.1 DC CURRENT INPUT

Resistor R3 is a 0.1Ω shunt resistor through which the current to be measured flows. The potential across R3 is switched to the dc input amplifier IC1 via quad switch IC5 and shunt FET TR6. The gain of IC1 is set to x 10 in dc current mode; the amplifier output is thus correctly scaled on the 2 volt range for A-to-D conversion.

4.2 AC CURRENT INPUT

In ac mode, the potential across shunt resistor R3 is switched, via quad switch IC18 and FET TR2, to the ac operational amplifier IC15. The gain of this amplifier is set to x 10 in ac current mode, thus the inputs to the AC-DC converter are scaled to the 2 volt input range.

After AC-DC conversion, the output voltage is switched to the dc input amplifier via quad switch IC5 and shunt FET TR6.

4.3 PROTECTION

Current overload protection is by 2 amp fuse, F1.

5 INPUT AMPLIFIER (Diag. 2.1)

Input amplifier IC1 is a precision FET input operational amplifier. Signals for IC1 are first amplified by the dual FET preamplifier TR13 whose bias is provided by trasistor TR14 and diode D7.

Inputs to the preamplifier depend on the selected DMM function which in turn controls the action of FETS, TR5 and TR6. Either TR5 (series FET), or TR6 (shunt FET). is switched on. For dc measurement functions, including resistance, TR5 conducts. For ac functions, TR6 conducts. (See also the function of the FETs during drift corrections)

The gain of the preamplifier is controlled by IC2 in response to range control signals from the floating logic. IC2 is a quad analog switch connected across IC1 feedback resistors R18 and R19. The switching of IC2 sets the overall gain of the preamplifier and IC1 to be either X1 or X10 depending on the selected input range or measurement function. Gain settings are summarised as follows:

DC Voltage Ranges (V)	**Gain**
0.2	x 10
2	x 1
20	x 10
200	x 1
1000	x 1

DC Current Range (mA)	**Gain**
2000	x 10

AC Current Range (mA)	**Gain**
2000	x 1

5.1 DRIFT CORRECT

A correction for drift (a 'drift correct') is necessary in order to compensate for any drift originating in the input amplifier or from the A-to-D Converter. Typically, drift results from component aging or from variations in temperature.

During a drift correct, the input amplifier is isolated from any measured input by switching off series FET TR5. The amplifier input is then connected to signal 0V via shunt FET TR6 (on) and quad analog switch IC5. With zero input to the amplifier, any resultant count must be due to drift. This is subsequently subtracted from a measurement count to provide a final count (ie, the result) which is free from error.

A 'timed' drift correct is carried out automatically every 10 seconds; further drift corrections are made after a change of mode, range, or integration time.

With the multimeter in remote, a timed drift correct can be controlled using command Yn (where n is an integer between 0 and 2). For more information on command Yn and other commands, refer to Part 2 of the 7150plus Operating Manual.

5.2 INPUT PROTECTION

Input protection against voltage overload for the input amplifier is by spark-gap SG2 (1400V Nom.) which is connected across the V Hi and Lo terminals. Resistors R9 and R25 form a current limiter and diodes D6 and D26 limit series inputs to the amplifier to ± 2.6 Volts.

6 ANALOG-TO-DIGITAL CONVERTER (Diag. 2.1)

The analog-to-digital converter (ADC) converts the analog output from the input amplifier into pulses. These are used to gate clock into a reversible counter in MPU IC103, to produce a count proportional to the measured input.

6.1 THE INTEGRATOR

Integrator IC8A has the following inputs connected to its summing point:

The input to be measured.
The forcing waveform.
The + or – reference.

With zero input to the multimeter and a 300Hz forcing square wave applied continuously to the integrator, the output is driven alternatively positive and negative through the thresholds of the comparators, IC9 and IC10.

The states of the two comparators are followed by bistable IC11 which synchronises the two transitions to clock. Outputs from IC11 control analog switch IC16 which switches the + and – reference supplies (through 0V) to the integrator input. This closed loop feedback arrangement is such that irrespective of the input to the integrator, the output will always remain dynamically balanced about zero.

The + and – reference levels from IC11 are NANDded by IC17a to produce a single clock-synchronised pulse train. This output is connected to counting circuits in the MPU, IC103.

7 REFERENCE SUPPLY (Diag. 2.1)

This circuit generates the +10V and +11V supplies for the ohms current generator and the + and – 3.1V reference supplies for the A-to-D converter.

Reference diode D20, together with resistor network R38, R42, R17and RV1 hold the input to IC4 at +3.1V. This input, via IC6A and IC16, is the + reference supply for the ADC whilst the inverted output from IC4 is the –3.1V reference supply. (All reference values are with respect to '0V ROME')

The + reference voltage is also used as the input to IC6b. This amplifier drives a current through R14, R57 and R16 in order to maintain the amplifier at balance. The resistor chain is tapped to provide the +10V and +11V reference voltages for the ohms current generator.

8 FLOATING LOGIC (Diag. 2.2)

This circuit includes the floating logic MPU, IC103. This IC communicates with the earthy logic MPU via a 2-wire optically coupled serial link. The circuit can be considered as having four separate functions:

1. Controls range and mode switching on the analog pcb.
2. Generates the forcing waveform for the ADC.
3. Counts the pulsed output from the ADC.
4. Stores calibration constants and checksum for use during auto-cal procedures.

8.1 ANALOG CONTROL LINES

These MPU outputs are connected to drivers, comparators and bi-lateral switches on the analog pcb. The outputs, via their respective switching devices, correctly configure the DMM circuits for the selected range and function.

8.2 FORCING WAVEFORM

The 'timer-out' signal from the MPU is a 300Hz waveform which is used to generate the forcing waveform for the ADC. The TTL level signal is converted into a 0 to 8V square wave by bi-lateral switch IC7 in the analog circuit.

8.3 COUNTING CIRCUIT

'Timer-in' is an input to the MPU which is derived from the ADC. The input is a single, clock synchronised pulse-train; the pulse widths indicating alternately, the length of time the + and – reference voltages were applied in order to balance the integrator. Within the MPU, these pulses are used to gate clock into a reversible counter to produce a nett count proportional to the measured input.

8.4 NON-VOLATILE MEMORIES

ICs 105 and 106 are EAROMs which hold the automatic calibration program for the multimeter and the calibration constants for each mode/range selected.

8.5 FLOATING LOGIC RESET WATCHDOG

This circuit is responsible for controlling the reset state of the floating logic MPU IC103. The circuit operation is similar to that of the earthy logic reset circuit.

A 1.2288 MHz, clock derived output from the IC103 is divided by a 12-bit binary counter IC107. The 300Hz (3.333 ms period) output from this IC is counted by a 4-bit counter, IC108.

The serial link TX DATA line from the earthy MPU, is also connected, via split pad (SP) 1, to IC108. This input holds-off the RESET output to IC103 unless the RX DATA line to IC 103 becomes inactive for ⟩ than 26.666 ms (8 x period). On power-up, the circuit holds IC103 in reset for ⟩ 26.666ms and then releases the RESET line (ie, the line goes hi). With RESET released, IC103 will function.

The circuit also has a 'time-out' watchdog function which allows the earthy MPU, IC510, to reset IC103. During normal operations, IC510 will be in frequent serial dialogue with IC103 via pin 2 of IC102a. This signal also connects to the reset circuit via SP1 and providing there is activity on this line, the RESET line will remain

inactive. Should the signal at SP1 remain high for) than 26ms, the watchdog circuit will 'time-out' and put IC103 into the RESET state.

With the RESET line active, bistable IC11 (see ADC) is also reset, thus MPU pin 8 (TIMER IN) is set to a logic 1 state. Pins 8, 9 and 10 are set to this state at initialisation.

9 EARTHY LOGIC (Diag. 2.4)

The earthy logic includes the main microprocessor set (MPUset) the GP-IB interface, the interface switch decoders and the watchdog reset circuitry.

9.1 MPU SET

The MPU set comprises the following:

IC510; 8-bit MPU.
IC508; 16K x 8 bit PROM.
IC506; 2K x 8 bit RAM.

9.2 GP-IB INTERFACE

The GP-IB interface has the following ICs:

IC503; General Purpose Interface Interface Adapter (GPIA)
IC502; Octal Transceiver
IC501; Octal Transceiver

IC503 consists essentially of 15 registers, 7 of which can be written into by the MPU and depending on the state of control lines R/W and RS0 to RS2, eight can be read by the MPU.

Transceivers IC501 and IC502 are bidirectional, each consisting of eight driver/receiver pairs. Each driver/receiver is enabled by a send/receive input (TR/1 and TR/2) with the disabled output forced to a high impedance state. All GPIB signals are at TTL levels.

9.3 ADDRESS DECODERS

The MPU addresses the various bus connected devices and the watchdog reset circuit via 3-to-8 decoder IC512. The PROM (IC508) is separately addressed via address line A15 which, when active, deselects IC512. PROM IC508 is addressed separately via A15 (inverted) address line.

9.4 RESET WATCHDOG

A 1.2288MHz, clock derived output from MPU IC 510 is further divided by 12-bit binary counter IC516. The 300Hz (3.33ms period) output from This IC is counted by 4-bit binary counter, IC517.

With MPU IC510 functioning normally, IC 517 is loaded every 10 ms (decode $4000) to hold off the reset output. Should pin 1 of IC 407 remain inactive for more than 26.64 ms (8 x period) then IC 517 output resets both the MPU and the display.

10 DISPLAY AND KEYBOARD (Diag. 2.6)

This circuit has two main functions:

1. To decode display and command data.
2. To transfer keyboard selections to the MPU.

10.1 DISPLAY

The display circuit includes custom LCD, X401. Electrically the LCD can be considered as being a set of 8, 3 x 3 matrices whose columns are separately controlled, but whose rows are common:

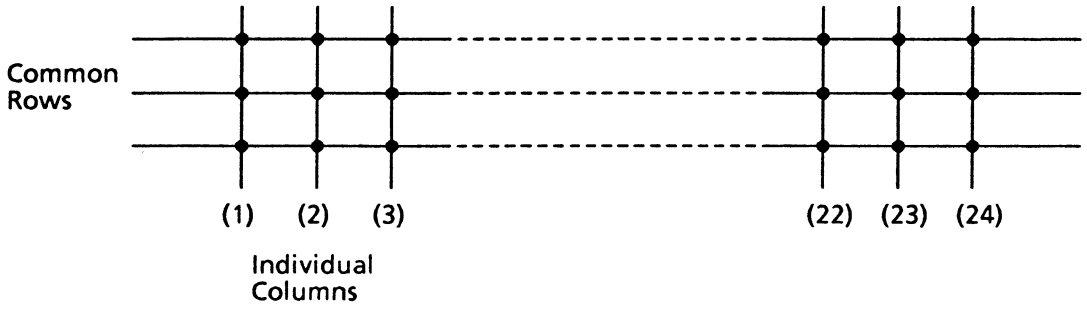

The intersections between the rows and columns form active elements which correspond to individual segments, decimal points, or annunciators that appear on the display. The display is driven by pulses that alternate about 0V; this ensures that the crystals do not become permanently polarised.

IC401 is the driver for the LCD. It is serially interfaced with IC510 (earthy logic MPU). Interconnect lines include SI (serial input), SCK (serial clock), CS (chip select), C/D (contropl data), BUSY, and RESET.

With CS pulled low, data may be sent on the SI line. The data are clocked bit-by-bit on each positive transition of SCK. On the eighth positive transition, the BUSY line is made active low by IC401 until it is ready to accept more data.

The serial input may simply be data for display, in which case the control data (C/D) line remains in its active low state. If however a driver command is sent, for example the command to blank the display or one to cause it to flash, then C/D will be set to the logic 1 state.

10.2 KEYBOARD

The (vertical) column outputs from the keyboard are connected directly to the MPU and, with no selections made, held in the logic 1 state via pull-up resistors on the earthy logic pcb. Keyboard (horizontal) rows are scanned via output latch IC511 and BCD-to-decimal decoder, IC402. Thus keyboard settings data are made available to the MPU.

11 POWER SUPPLIES (Diags. 2.3 and 2.5)

The power supply circuit provide both earthy and floating power for the multimeter. The circuit is distributed between pcb 1, and pcb 2, with a
mains power input unit and a calibration (cal) enable switch are included on the rear panel.

11.1 MAINS POWER INPUT UNIT

Contacts a to e within the mains power input, unit are set by positioning the voltage selector/cam assembly, to the required voltage setting as seen through the aperture at the rear of the DMM.

11.2 CAL ENABLE

IC306 acts as a switch for the -25V output. This supply, which is required by the auto-calibration EAPROMs, will only be made available when the transistor conducts, ie, when the calibration jack-plug is inserted. This is to prevent unauthorised interference to calibration coefficients.

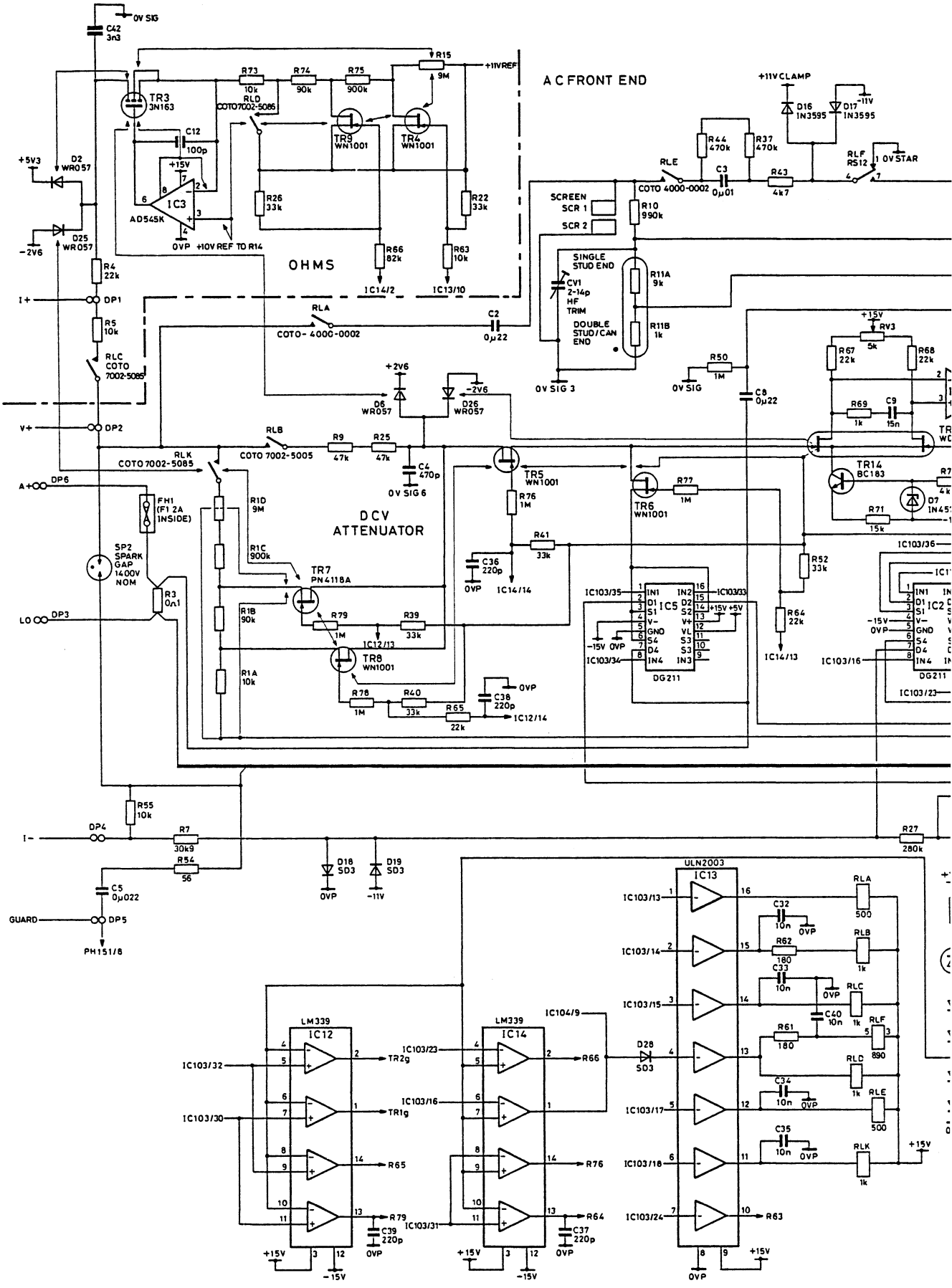

A C FRONT END
OHMS
DCV ATTENUATOR
TR3 3N163
TR9 WN1001
TR4 WN1001
IC3 AD545K
TR5 WN1001
TR6 WN1001
TR7 PN4118A
TR8 WN1001
TR14 BC183
IC5 DG211
IC2 DG211
IC13 ULN2003
IC12 LM339
IC14 LM339
SP2 SPARK GAP 1400V NOM
FH1 (F1 2A INSIDE)
RLC COTO 7002-5085
RLA COTO- 4000-0002
RLB COTO 7002-5005
RLK COTO 7002-5085
RLD COTO7002-5086
RLE COTO 4000-0002
RLF RS12
SCREEN SCR 1
SCR 2
SINGLE STUD END
DOUBLE STUD/CAN END
CV1 2-14p HF TRIM
+11V CLAMP
+11VREF
+10V REF TO R14
0V SIG
0V STAR
0V SIG 3
0V SIG 6
GUARD
PH151/8

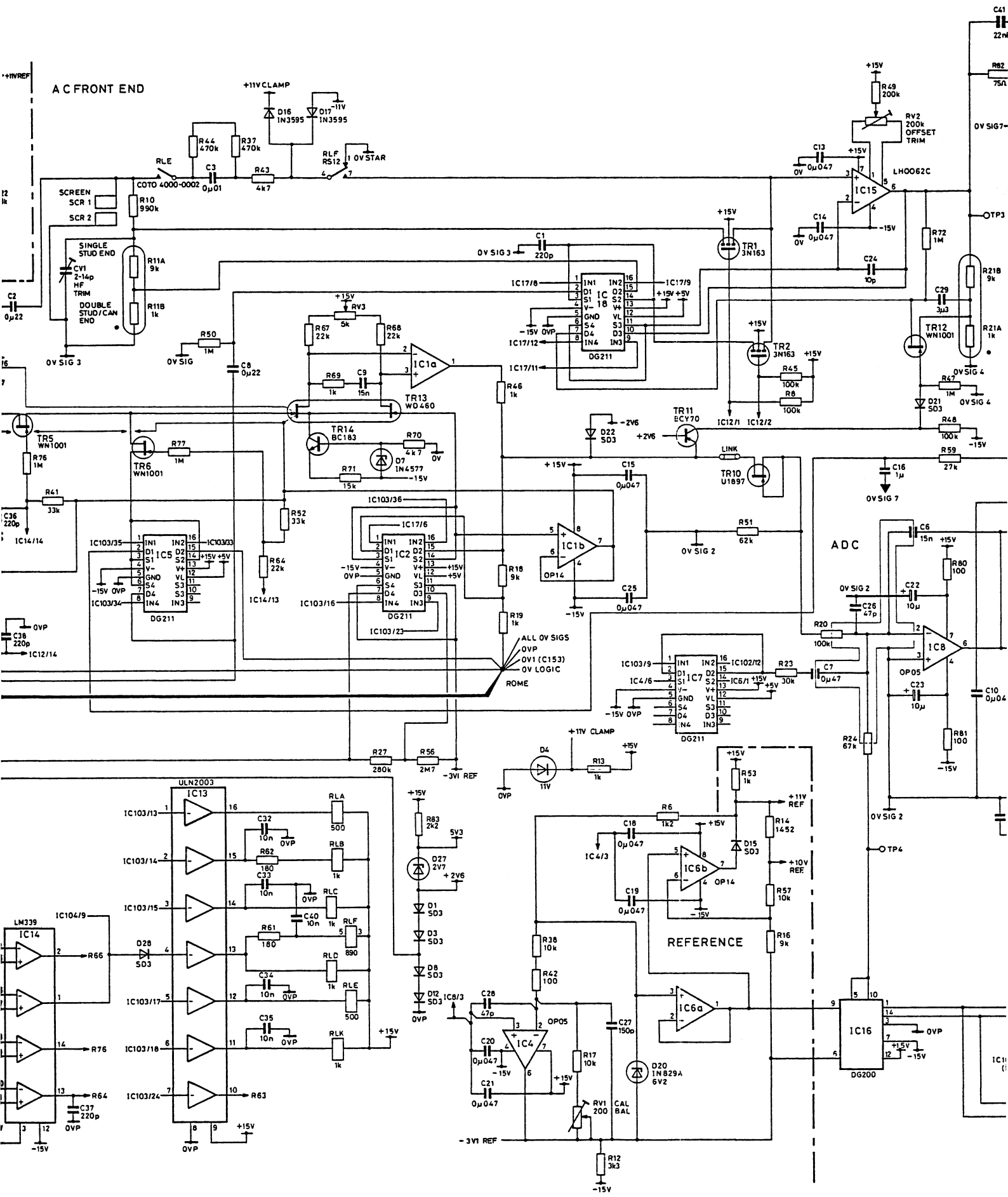
A C FRONT END
ADC
REFERENCE
+11V CLAMP
-11V
RLE
COTO 4000-0002
RLF
RS12
1 0V STAR
SCREEN
SCR 1
SCR 2
SINGLE STUD END
DOUBLE STUD/CAN END
CV1 2-14p HF TRIM
R10 990k
R11A 9k
R11B 1k
R44 470k
R37 470k
R43 4k7
C3 0µ01
D16 1N3595
D17 1N3595
R49 200k
RV2 200k OFFSET TRIM
LH0062C
IC15
C13 0µ047
C14 0µ047
R72 1M
R21B 9k
R21A 1k
C29 3µ3
TR12 WN1001
TR1 3N163
TR2 3N163
C24 10p
C1 220p
IC18
DG211
IC17/8
IC17/9
IC17/12
IC17/11
IC12/1
IC12/2
R45 100k
R8 100k
R47 1M
D21 SD3
R48 100k
R59 27k
C16 1µ
TR11 ECY70
D22 SD3
LINK
TR10 U1897
C15 0µ047
R51 62k
C25 0µ047
IC1b
OP14
IC1a
TR13 WD460
R46 1k
R67 22k
R68 22k
RV3 5k
R69 1k
C9 15n
R50 1M
C8 0µ22
TR14 BC183
R70 4k7
D7 1N4577
R71 15k
R77 1M
TR5 WN1001
TR6 WN1001
R76 1M
R41 33k
R52 33k
R64 22k
IC5
IC2
IC103/35
IC103/33
IC103/34
IC103/36
IC17/6
IC103/16
IC103/23
R18 9k
R19 1k
ALL 0V SIGS
0VP
0V1 (C153)
0V LOGIC
ROME
IC7
IC103/9
IC102/12
IC6/1
IC4/6
R23 30k
C7 0µ47
R20 100k
C6 15n
R80 100
C22 10µ
C26 47p
IC8
OP05
C23 10µ
C10 0µ04
R81 100
R24 67k
R27 280k
R56 2M7
-3V1 REF
D4 11V
R13 1k
R53 1k
+11V REF
R14 1452
+10V REF
R57 10k
R16 9k
R6 1k2
C18 0µ047
IC4/3
IC6b
OP14
D15 SD3
C19 0µ047
IC6a
IC16
DG200
ULN2003
IC13
IC103/13
IC103/14
IC103/15
IC103/17
IC103/18
IC103/24
RLA 500
RLB 1k
RLC 1k
RLF 890
RLD 1k
RLE 500
RLK 1k
C32 10n
C33 10n
C40 10n
C34 10n
C35 10n
R62 180
R61 180
LM339
IC14
IC104/9
R66
R76
R64
R63
C37 220p
D28 SD3
R83 2k2
D27 2V7
D1 SD3
D3 SD3
D8 SD3
D12 SD3
IC8/3
C28 47p
C20 0µ047
C21 0µ047
IC4
OP05
R38 10k
R42 100
R17 10k
C27 150p
D20 1N829A 6V2
RV1 200 CAL BAL
R12 3k3
-3V1 REF
TP3
TP4
0V SIG 3
0V SIG
0V SIG 4
0V SIG 7
0V SIG 2
IC14/14
IC14/13
IC12/14
C36 220p
C38 220p
0VP
+15V
-15V
+5V
-5V
5V3
+2V6
-2V6

Diag.

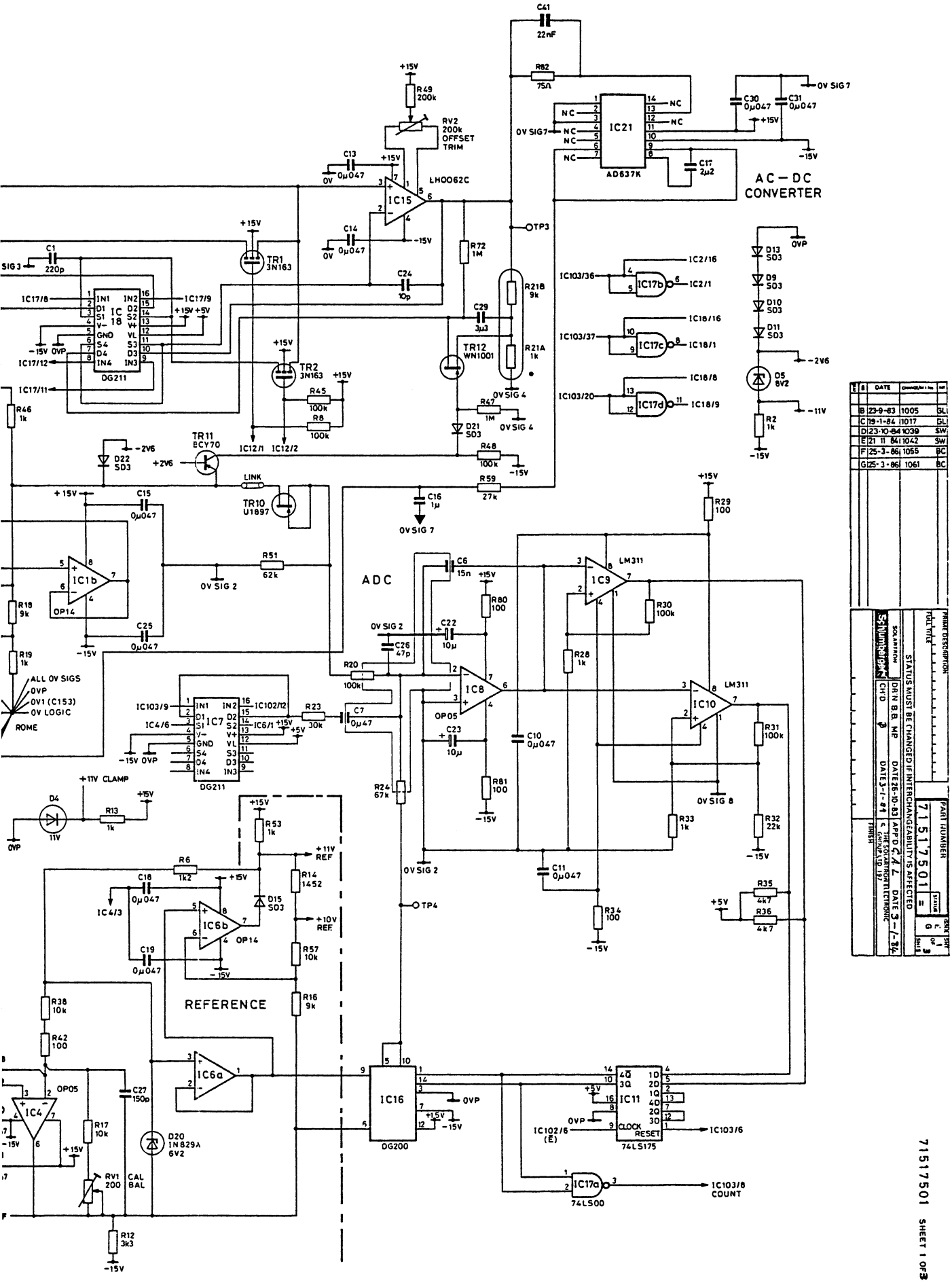

Diag. 2.1 *PCB 1, FLOATING ANALOG*

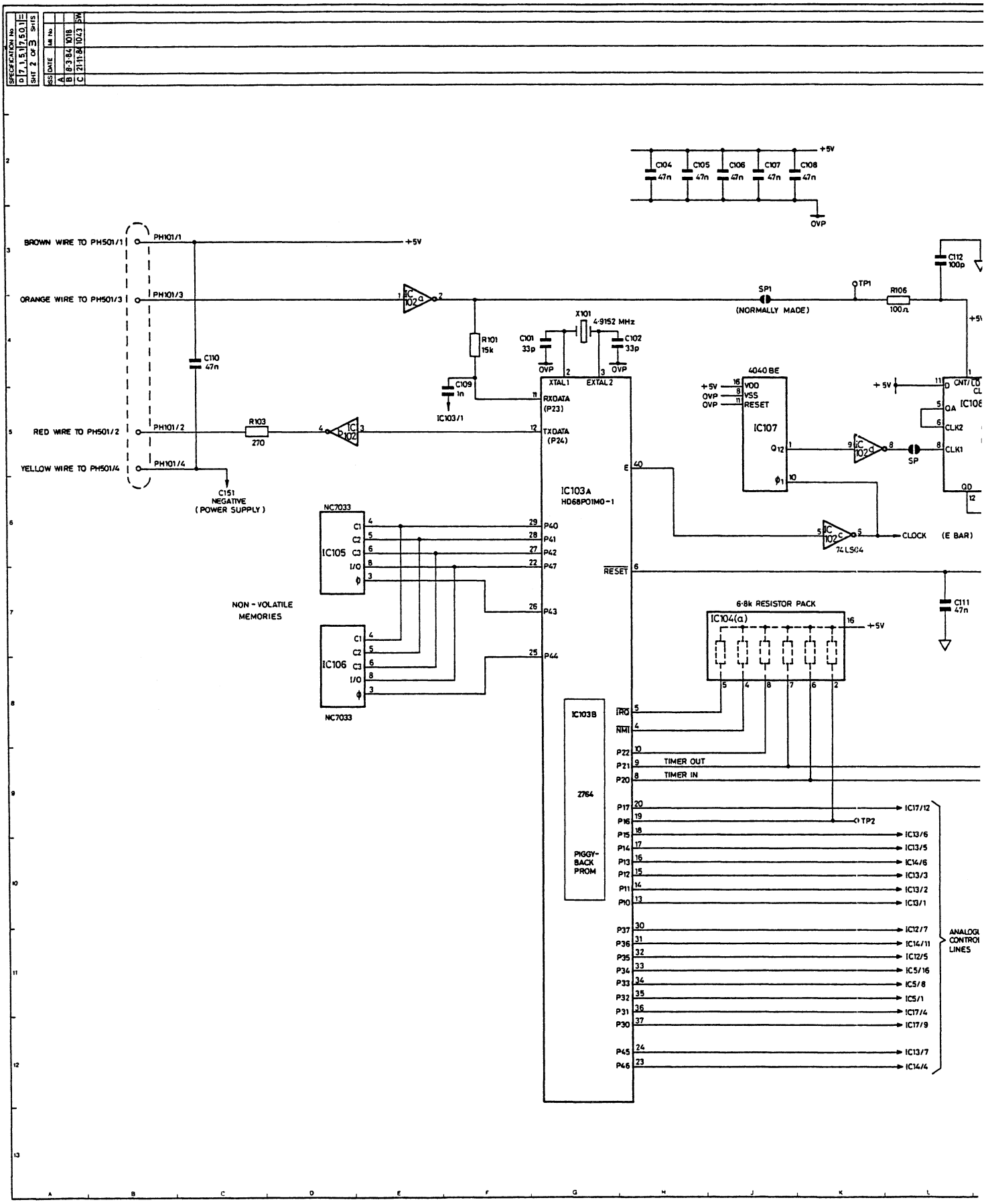

SPECIFICATION No
D 7,1,5,1 7,5,0,1 E
SHT 2 OF 3 SHTS
ISS DATE MI No
A 8-3-84 1018
B 21-11-84 1043 SW
C 21-11-84 1043 SW
BROWN WIRE TO PH501/1
ORANGE WIRE TO PH501/3
RED WIRE TO PH501/2
YELLOW WIRE TO PH501/4
PH101/1
PH101/3
PH101/2
PH101/4
+5V
C110 47n
C151 NEGATIVE (POWER SUPPLY)
R103 270
IC102a
IC102b
R101 15k
C109 1n
IC103/1
C101 33p
C102 33p
X101 4·9152 MHz
OVP
XTAL1
EXTAL2
RXDATA (P23)
TXDATA (P24)
IC103A HD68P01M0-1
E
RESET
P40
P41
P42
P47
P43
P44
NC7033
IC105
IC106
C1
C2
C3
I/O
NON - VOLATILE MEMORIES
IC103B
2764
PIGGY-BACK PROM
IRQ
NMI
P22
P21
P20
P17
P16
P15
P14
P13
P12
P11
P10
P37
P36
P35
P34
P33
P32
P31
P30
P45
P46
TIMER OUT
TIMER IN
TP2
IC17/12
IC13/6
IC13/5
IC14/6
IC13/3
IC13/2
IC13/1
IC12/7
IC14/11
IC12/5
IC5/16
IC5/8
IC5/1
IC17/4
IC17/9
IC13/7
IC14/4
ANALOGUE CONTROL LINES
C104 47n
C105 47n
C106 47n
C107 47n
C108 47n
SP1 (NORMALLY MADE)
TP1
R106 100Ω
C112 100p
4040 BE
VDD
VSS
RESET
IC107
Q12
SP
CNT/LD
QA
CLK2
CLK1
QD
IC108
74LS04
CLOCK
(E BAR)
C111 47n
6·8k RESISTOR PACK
IC104(a)

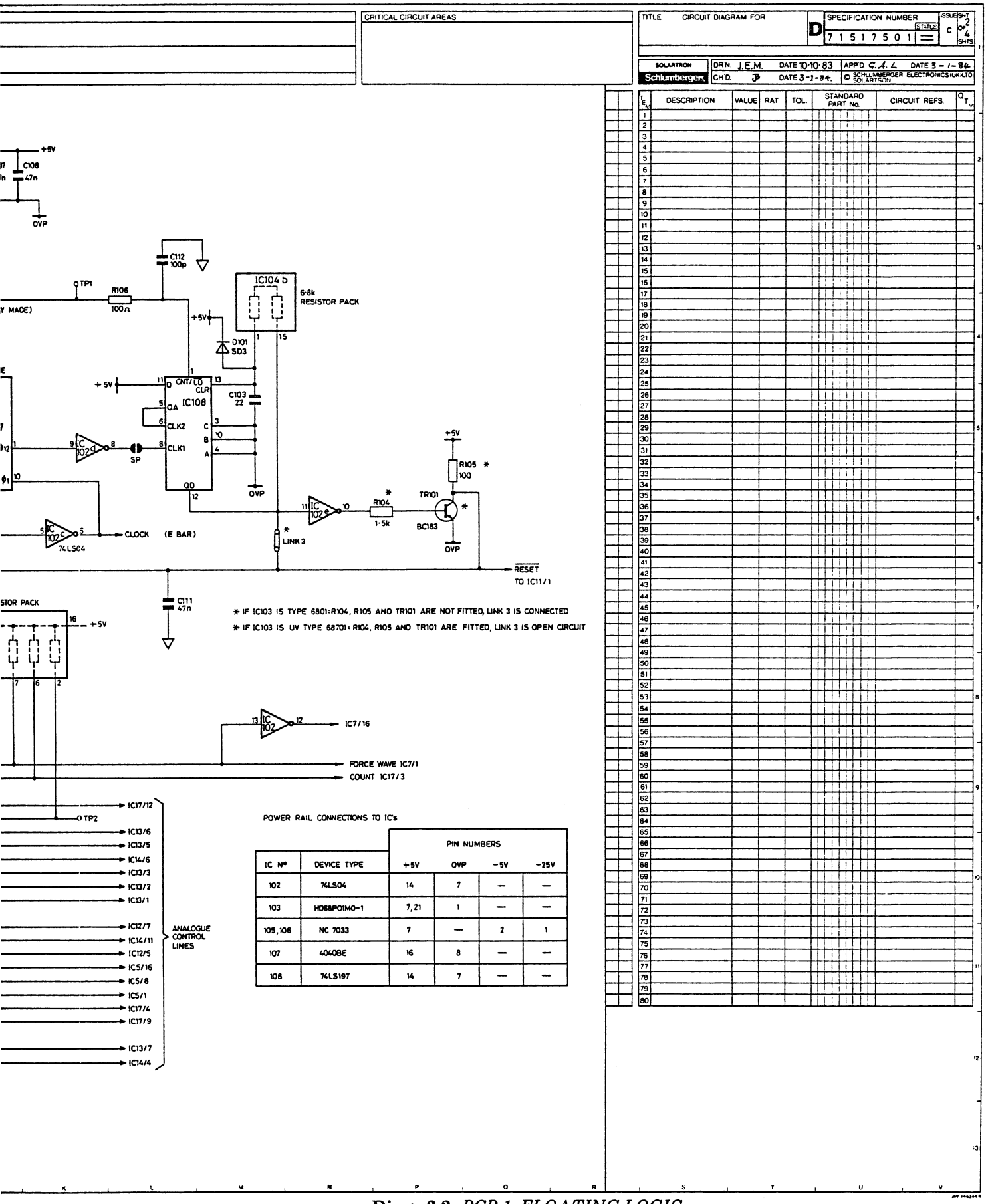

POWER RAIL CONNECTIONS TO ICs

IC N°	DEVICE TYPE	PIN NUMBERS +5V	0VP	−5V	−25V
102	74LS04	14	7	—	—
103	HD68P01M0-1	7,21	1	—	—
105,106	NC 7033	7	—	2	1
107	4040BE	16	8	—	—
108	74LS197	14	7	—	—

Diag. 2.2 *PCB 1, FLOATING LOGIC*

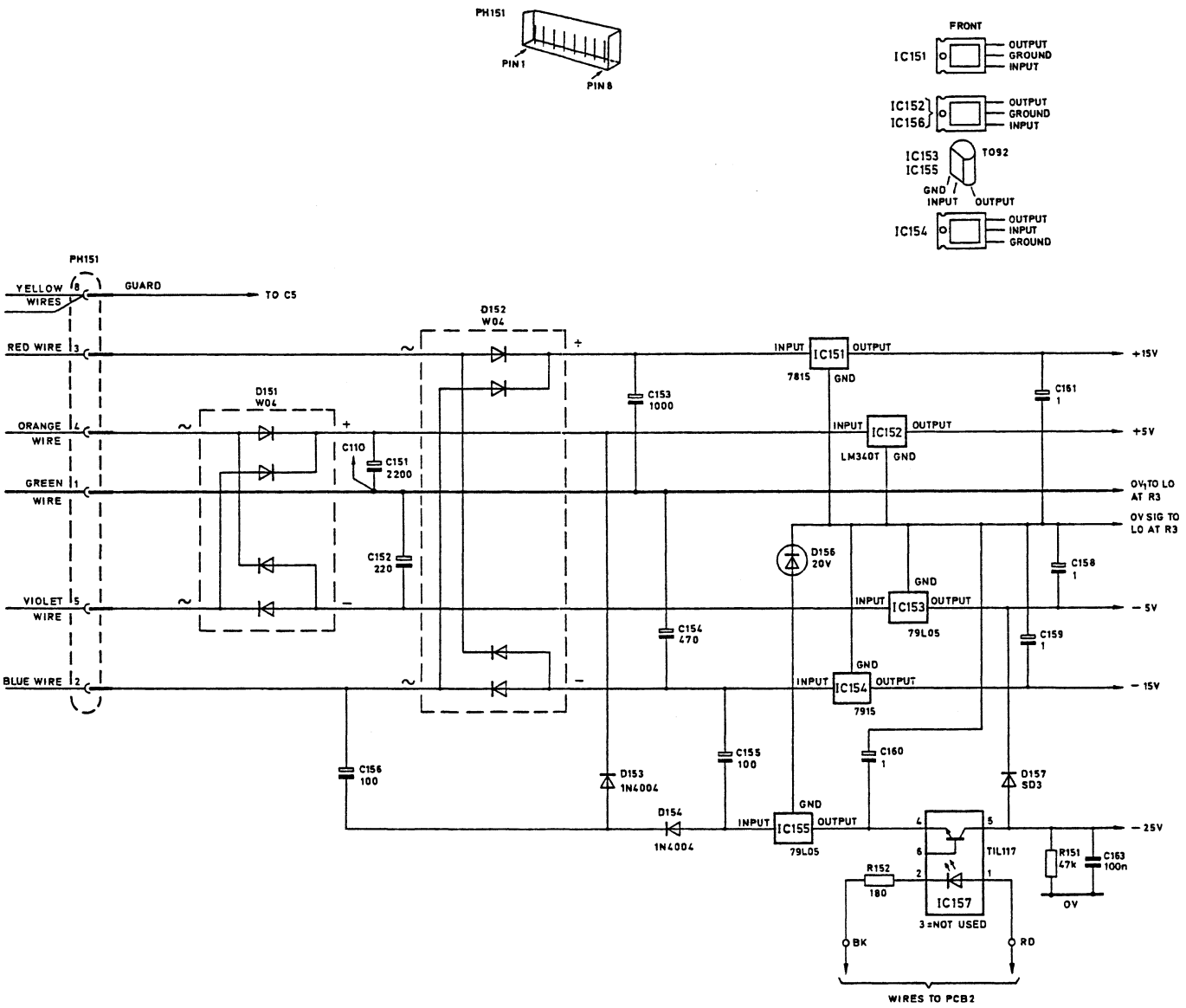

Diag. 2.3 *PCB 1, FLOATING ANALOG POWER SUPPLIES*

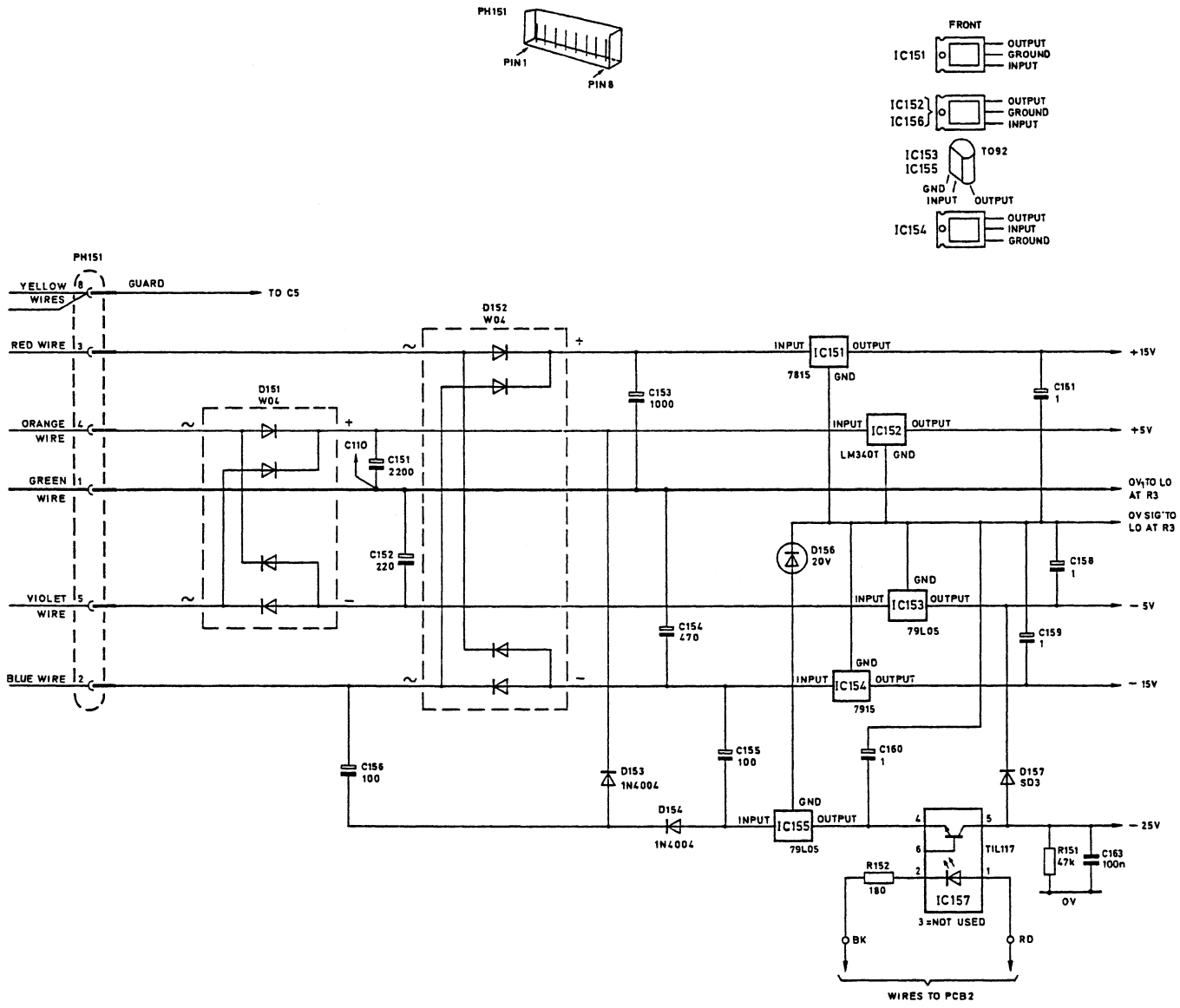

Diag. 2.3 *PCB 1, FLO*

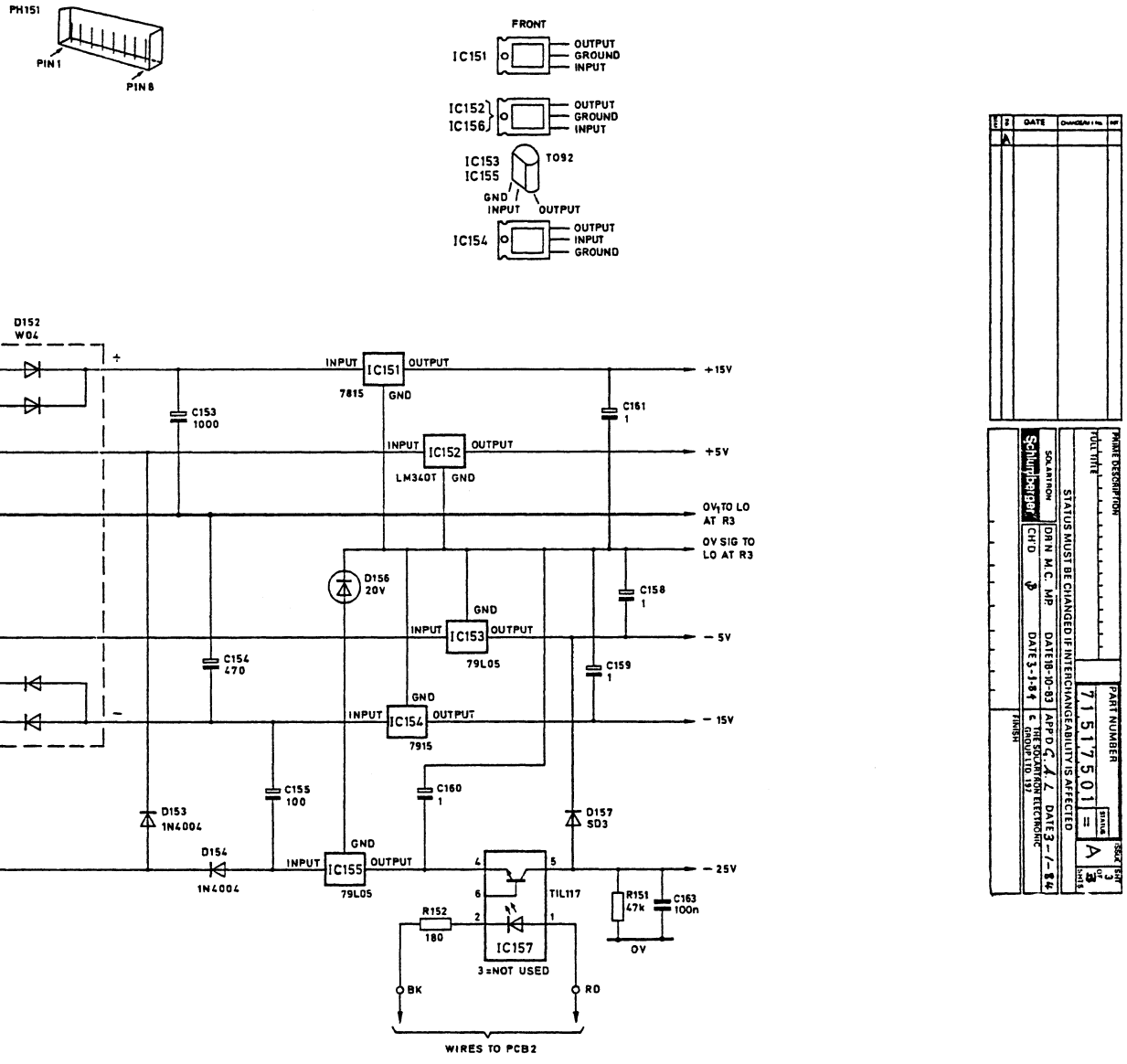

71517501

Diag. 2.3 *PCB 1, FLOATING ANALOG POWER SUPPLIES*

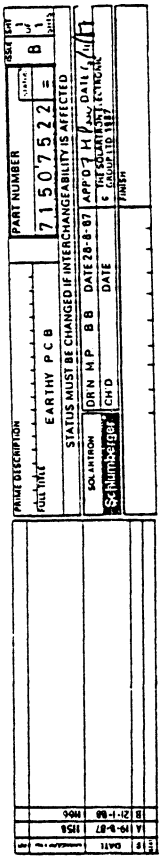

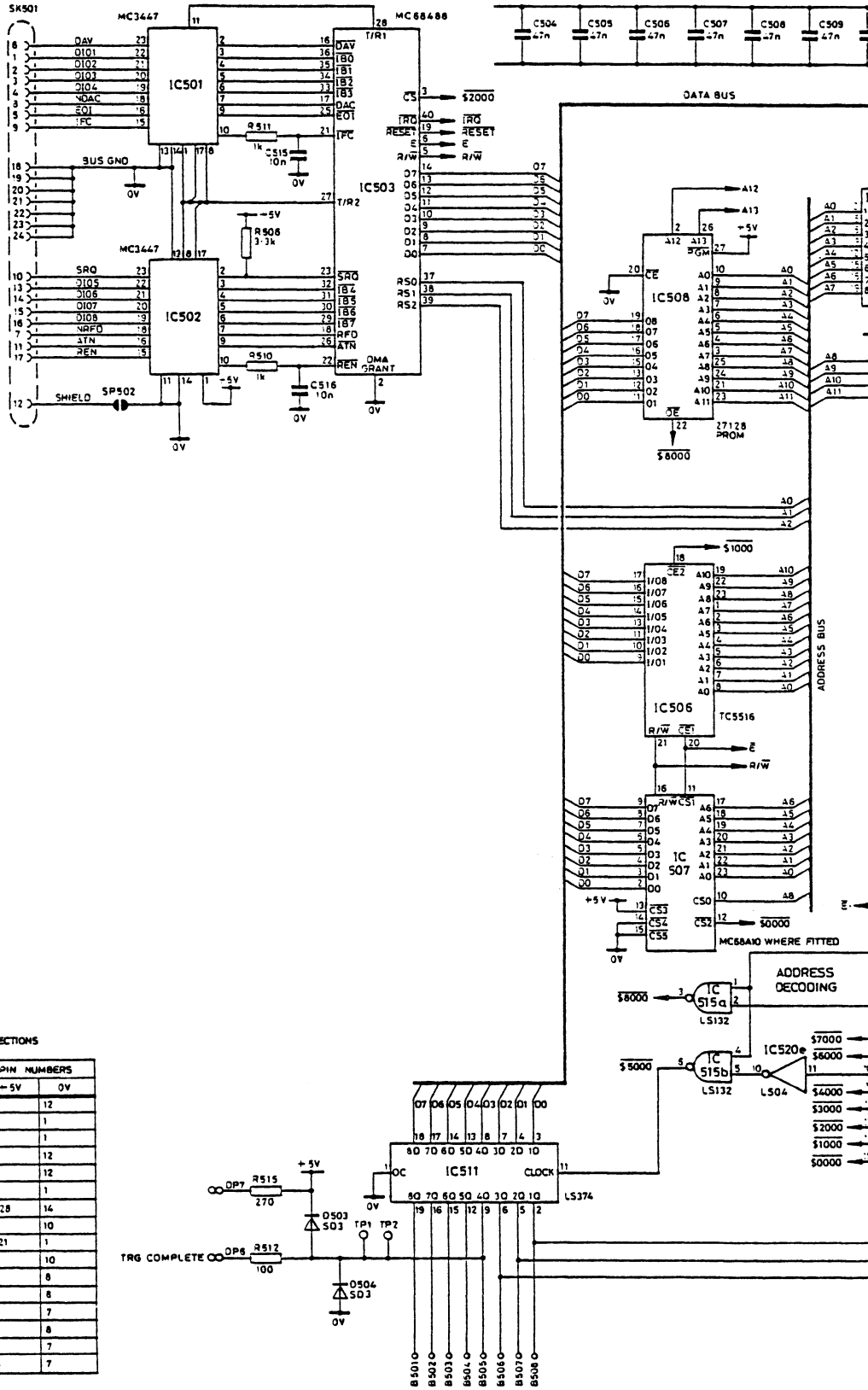

POWER CONNECTIONS

IC No.	DESCRIPT	PIN NUMBERS +5V	PIN NUMBERS 0V
501, 502	MC3447	24	12
503	MC68488	20	1
504	SY6551	15	1
505	AD558	11	12
506	TC5516	24	12
507	MC68A10	24	1
508	2532	1, 28	14
509	LS373	20	10
510	63A03	7, 21	1
511	LS374	20	10
512	LS138	16	8
513	LS145	16	8
515	LS132	14	7
516	MC14040	16	8
517	LS197	14	7
520	LS04	14	7

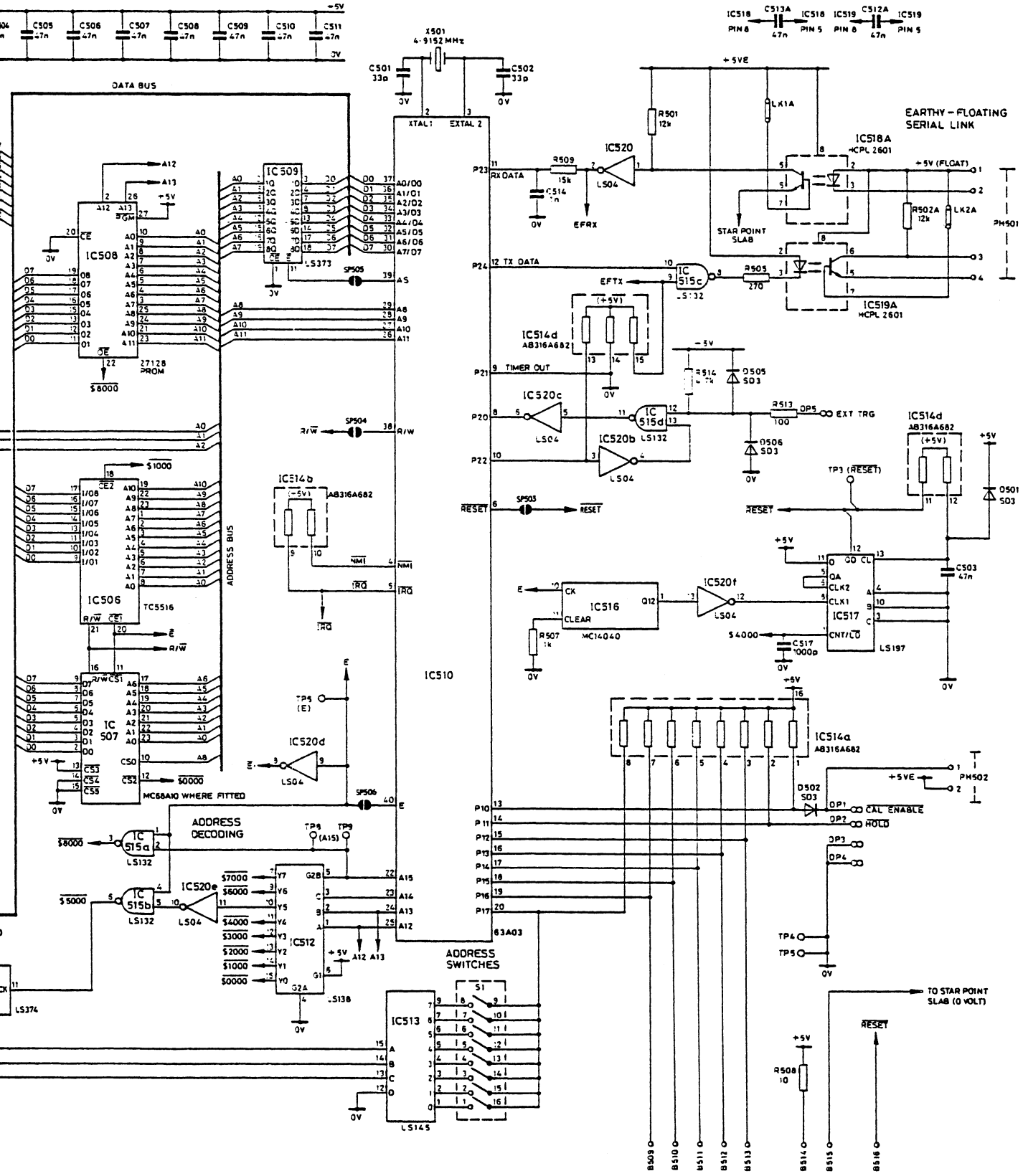

Diag. 2.4 *Pcb 22, EARTHY LOGIC*

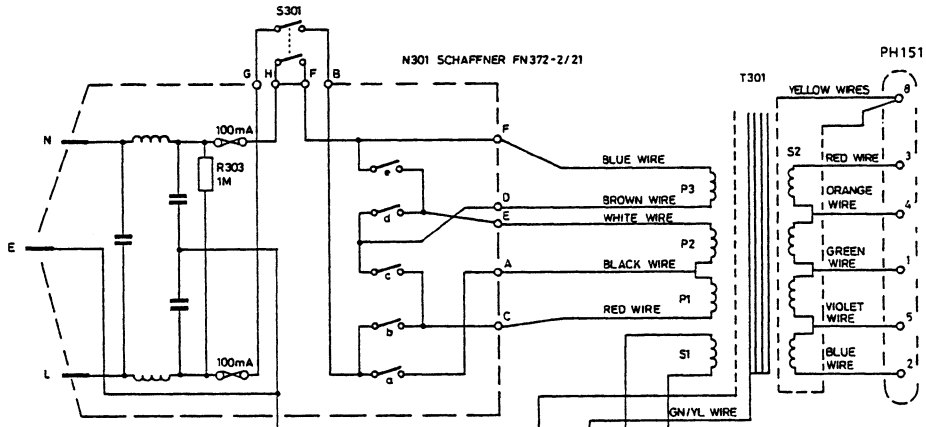

SEE CIRCUIT DIAG. 2.3

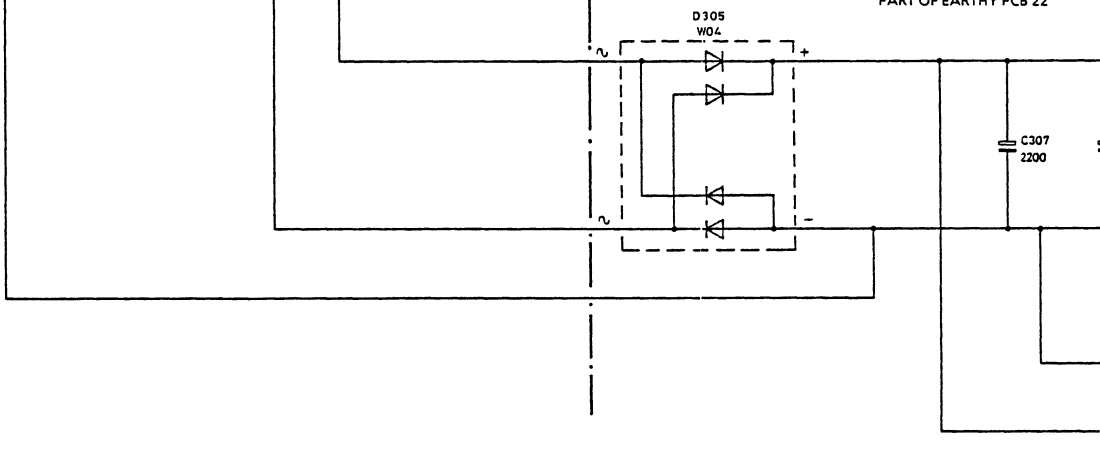

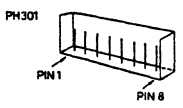

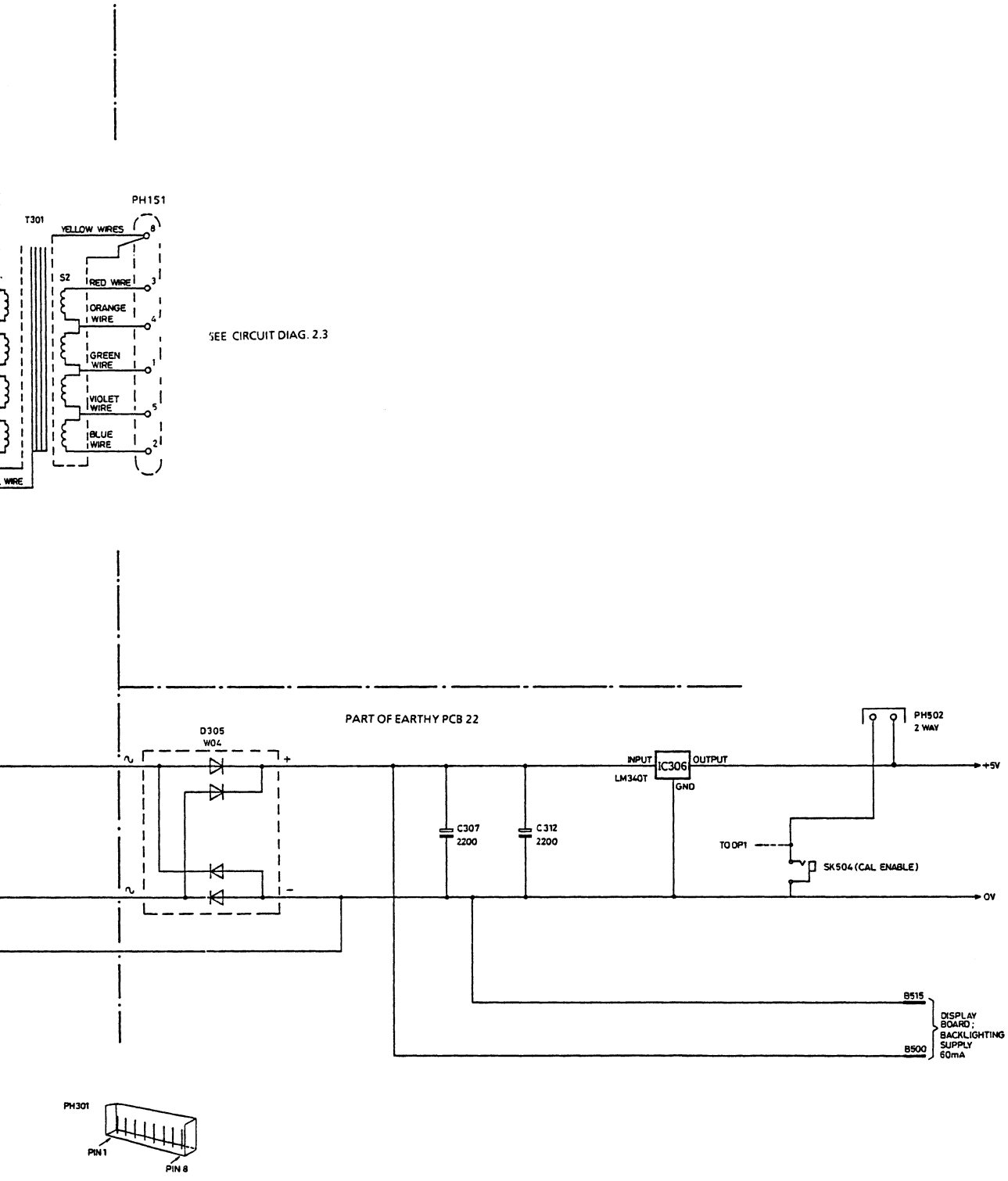

Diag. 2.5 *EARTHY POWER SUPPLIES*

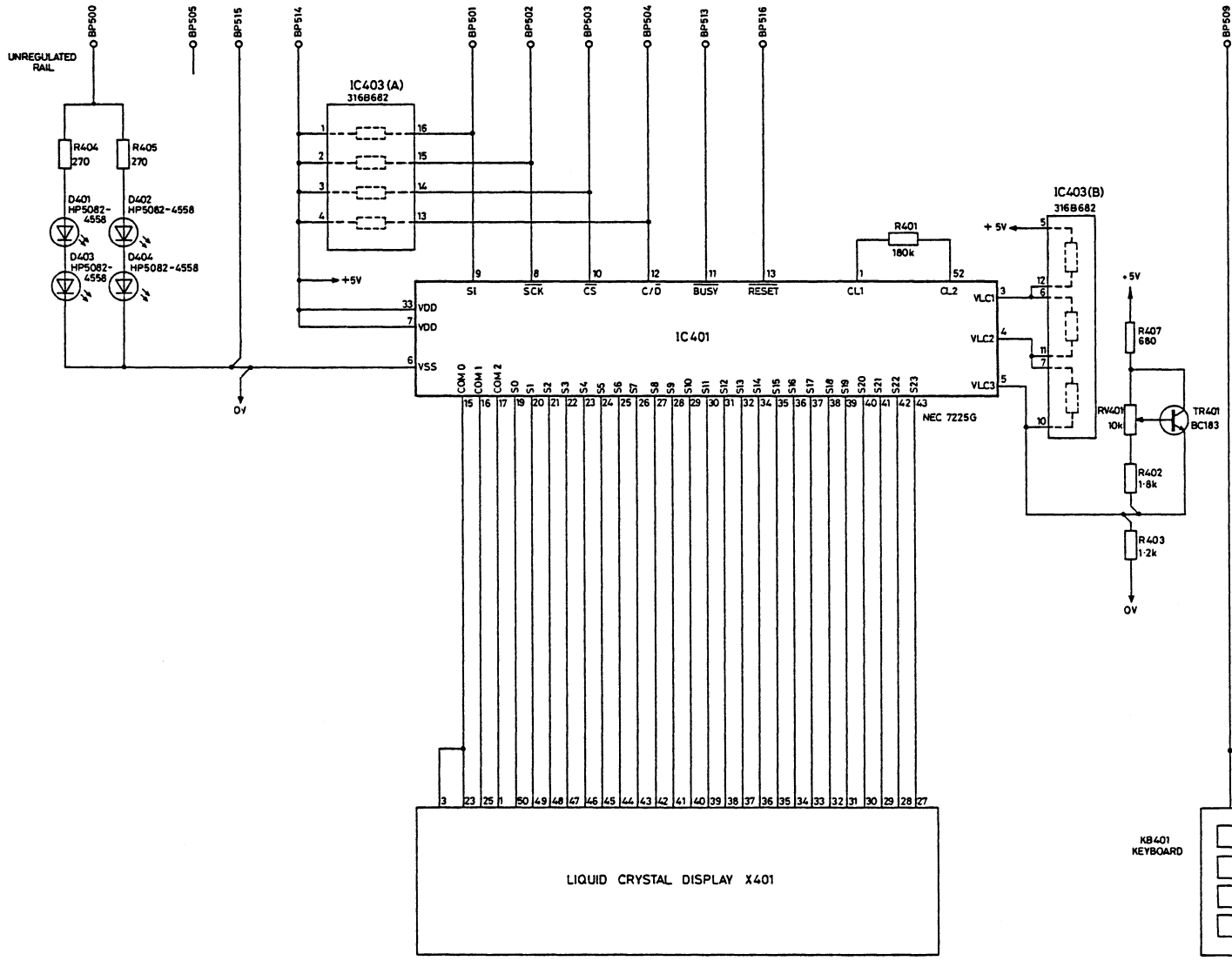
UNREGULATED RAIL
BP500
BP505
BP515
BP514
BP501
BP502
BP503
BP504
BP513
BP516
BP509
R404 270
R405 270
D401 HP5082-4558
D402 HP5082-4558
D403 HP5082-4558
D404 HP5082-4558
IC403(A) 3168682
IC403(B) 3168682
R401 180k
+5V
0V
IC401
NEC 7225G
SI
SCK
CS
C/D
BUSY
RESET
CL1
CL2
VDD
VSS
VLC1
VLC2
VLC3
R407 680
RV401 10k
TR401 BC183
R402 1·8k
R403 1·2k
LIQUID CRYSTAL DISPLAY X401
KB401 KEYBOARD

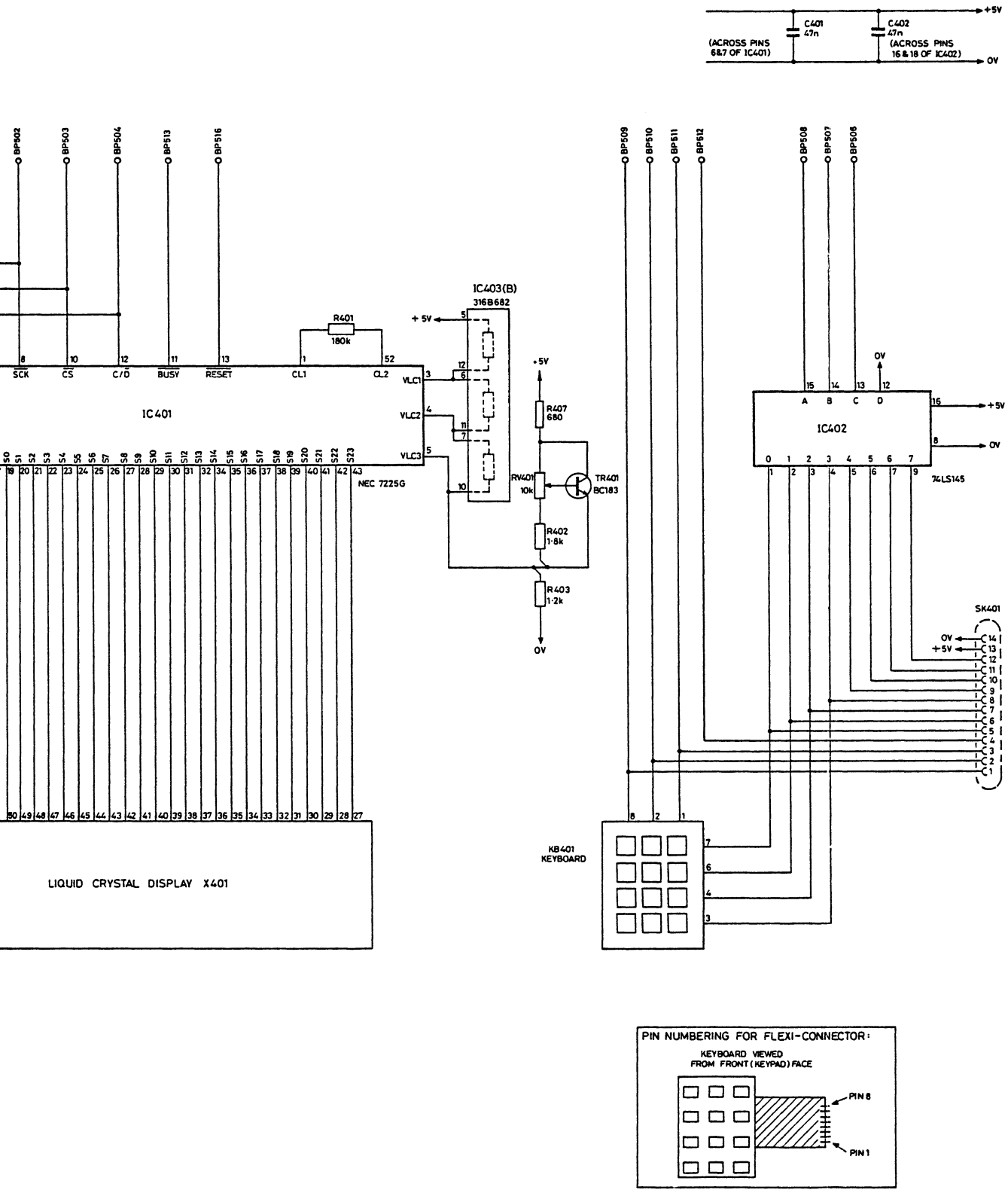
+5V
C401
47n
(ACROSS PINS
6&7 OF IC401)
C402
47n
(ACROSS PINS
16 & 18 OF IC402)
0V
BP502
BP503
BP504
BP513
BP516
SCK
CS
C/D
BUSY
RESET
CL1
CL2
IC401
R401
180k
IC403(B)
316B682
+5V
VLC1
VLC2
VLC3
R407
680
RV401
10k
TR401
BC183
R402
1·8k
R403
1·2k
0V
NEC 7225G
LIQUID CRYSTAL DISPLAY X401
BP509
BP510
BP511
BP512
BP508
BP507
BP506
IC402
74LS145
SK401
KB401
KEYBOARD

PIN NUMBERING FOR FLEXI-CONNECTOR:
KEYBOARD VIEWED
FROM FRONT (KEYPAD) FACE
PIN 8
PIN 1

Dia

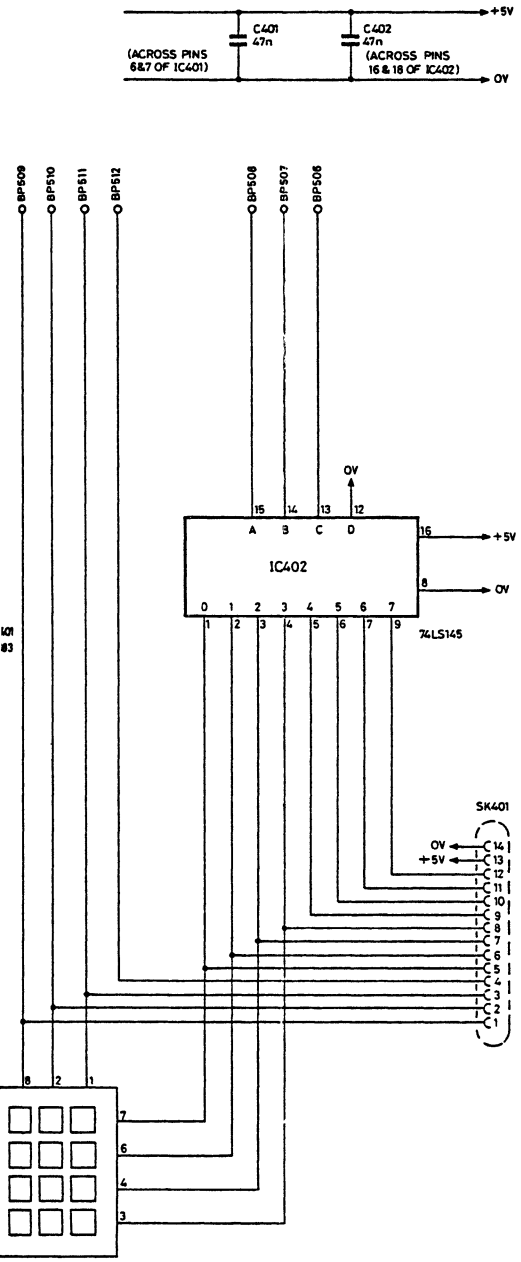

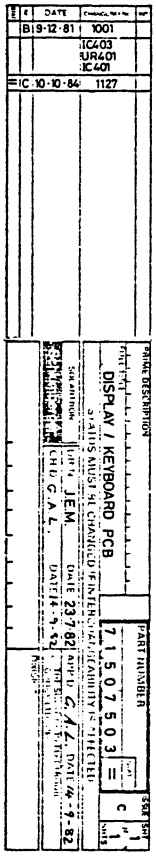

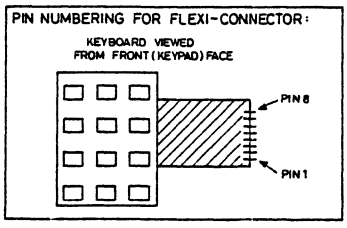

Diag. 2.6 *PCB 3, DISPLAY AND KEYBOARD*

Chapter 3
Setting-up and Calibration Procedures

Section		*Page*
1	General	3.3
2	Safety	3.3
3	Disassembly and Preset Controls	3.3
4	Equipment Requirements	3.3
5	General Tests	3.4
6	Initial Set -up	3.5
	Power Supply Tests	3.4
	Display Tests	3.4
	Keyboard Tests	3.5
	Rear Panel Tests	3.5
7	Initial Calibration	3.7
7.1	Direct Voltage	3.7
7.2	Alternating Voltage	3.7
7.3	Resistance	3.8
7.4	Direct Current	3.8
7.5	Alternating Current	3.9
7.6	End of Calibration	3.9
8	Initial Calibration Checks	3.9
8.1	Direct Current	3.9
8.2	Resistance Checks	3.9
8.3	Direct Voltage Checks	3.10
8.4	Alternating Voltage	3.11
9	Final Calibration	3.13
9.1	Direct Voltage	3.13
9.2	Resistance	3.13
9.3	Alternating Voltage	3.14
9.4	Direct Current	3.14
9.5	Alternating Current	3.14

Cont.

Section		*Page*
10	Post Calibration Checks	3.15
11	Safety Checks	3.16
12	Alternative Calibration Method	3.16

1 GENERAL

These procedures enable the instrument to be set-up and calibrated to the factory despatch standards.

2 SAFETY

This instrument must be disconnected from the mains supply when partially dismantling it to gain access to the preset controls and also when it is being reassembled.

When adjusting preset controls beware of high test voltages, the guard potential on the guard plate and also the mains input supply.

3 DISASSEMBLY AND PRESET CONTROLS

To gain access to the preset controls refer to the disassembly instructions given in Chapter 4. The various preset controls are identified in Fig 3.1 on page 3.7.

4 EQUIPMENT REQUIREMENTS

The following equipment is required :

1. General purpose DMM, of at least 100000 scale length and:

   a. ≥ 10MΩ i/p impedance on Vdc.
   b. ≥ 1MΩ i/p impedance on Vac.
   c. < 10 ohm load on Idc and Iac.

2. General purpose oscilloscope.

3. Controller; Commodore PET fitted with BASIC 3 or BASIC 4 firmware.

4. Calibrator; Fluke 5100 or 5101 fitted with GP-IB Interface.

5. ACV Calibrator; Hewlett-Packard 745 (or equiv.)

6. ACV High Voltage Amplifier Hewlett-Packard 746 (or equiv.)

7. 10 MΩ resistor connected across a twin 4mm connector.

8. PET printer.

9. Software 71506598 and 71506599.

10. Schlumberger 7081 DVM. (Required for final and post calibration only).

11. Two screened input leads (to reduce series mode interference on high ohms).

12. 7150 test box for SK505 (test gear number 71506004).

5 GENERAL TESTS

General tests are carried out on the following:

Power supply
Display
Keyboard
Rear panel

5.1 POWER SUPPLY TESTS

The mains selector should indicate 240 volts and the fusing should be 100mA SLO-BLO. Line voltage should be 240V.

Rail	Limits
15V unreg. floating.	+21V min. +27V max.
15V reg. floating.	+15V ± 0.75V.
-15V unreg. floating.	+22V min. +28V max.
-15 reg. floating.	+15V ± 0.75.
5V unreg. floating.	+9V min. +11.5V max.
5V reg. floating.	+5V ± 0.25V.
5V unreg. earthy.	+9V min. +11.5V max.
5V reg. earthy.	+5V ± 0.25V.

5.2 DISPLAY TESTS

The display contrast is adjusted using RV 401. The potentiometer should be adjusted to satisfy two criteria:

a. The digits should appear as black as possible.

b. The digits should appear to change quickly from one value to another.

It is possible, but incorrect, to satisfy criterion a. but have the numbers appear to slur from one value to another.

The display must be checked to confirm that all digits posses all their bars and decimal points; that all the top row annunciators are available; that all the mode annunciators (Vdc, Iac etc) are available.

5.3 KEYBOARD TESTS

Keyboard tests may be done manuallyor as part of a larger automated routine. The keys Vdc, Vac, kΩ/diode, Idc, Iac and °C/°F should be pressed and the display annunciators checked to confirm that the requested mode is shown.

The range keys should be pressed to confirm that ranging up/down operates satisfactorily and that AUTORANGE can be selected and deselected. The LOCAL key can only be checked when the DMM is already in REMOTE. Check that the REM annunciator goes out when LOCAL is pressed. The NULL key should be pressed and the display observed for nulling activity. The DIGITS key should be pressed to ensure that 4½ , 5½ and 6½ digits (see Note) can be obtained . With 6½ digits selected, the FILT annunciator should flash.

Ensure that the 7150plus is left in the 5½ digits setting at the end of the keyboard tests.

Note. With 7150plus, a '½- digit' display window can display only the numbers 1 or 2. If the DMM is commanded remotely via the GP-IB Interface, then the figure 3 may also appear on a print-out.

5.4 REAR PANEL TESTS

Select a 5½ digit operation on the DMM using the front panel DIGITS button. Connect test box 71506004 to SK505 on the rear panel and check that the power LED in the test box illuminates. Then:

a. Operate the HOLD switch and check that the HOLD annunciator appears on the DMM display.

b. Press the EXTERNAL TRIGGER button on the test box and ensure that the HOLD annunciator on the DMM extinguishes for approximately 1 second and then re-appears with the display showing a new 'frozen' measurement result.

c. Check also that the TRIGGER COMPLETE led on the test box flashes once for each press of the EXTERNAL TRIGGER button on the test box and that the COMP (measurement complete) annunciator on the front panel also flashes with each external trigger.

6 INITIAL SET-UP

The initial set-up procedures must be performed before any calibration of the DMM is attempted. During the procedure, ensure that the calibration jack plug is fitted only at the appropriate time.

6.1 PRELIMINARIES

Fit the GP-IB adapter, then make the following switch settings on the DMM :

a. Set the GP-IB ON/OFF switch to ON, set an appropriate address for the DMM and set both the TALK ONLY and LISTEN ONLY switches to OFF.

b. Set front/rear switch to FRONT.

c. Set the DMM power ON.

Insert the calibration jack-plug, then set-up the DMM using the following table and Fig 3.1 . Once the steps in the table have been completed, proceed with the Initial Calibration.(Section 7).

Test	Range & Mode	Input	Action	Limits	Comment
1.	2Vdc	s/cV-Ω Hi/Lo	Adjust RV3 on 'DVM between LK2 & Rome DMM on HOLD	± 1mV	Input amp. gross offset null.
2.	2Vdc	s/cV-Ω Hi/Lo	Check display for scatter using ext. trigs with HOLD	3 adjacent values	2V Range noise test
3.	0.2Vdc	s/cV-Ω Hi/Lo	As above	4 adjacent values	0.2 Range noise test
4.	2Vdc	20Vdc V-Ω Hi/Lo	Measure across C4	between +3.90& +3.05	Positive input clamp test (D6)
5.	2Vdc	-20Vdc V-Ω Hi/Lo	As above	-3.90& -3.05	Negative input clamp test (D26)
6.	2Vdc	o/c V-Ω Hi/Lo	Adjust RV1, alternately measure each end of D20 (ref. Rome)	∠300µV difference (ignoring (polarity)	Cal. Bal. adjustment
7.	20Vac	s/cV-Ω Hi/Lo	Adjust RV2 for minimum dc voltage at TP3	∠ ± 50mV refered to 0V.	IC 15 offset null adjust.Use DMM to monitor TP3. Transformer laminations to be mains-grounded.

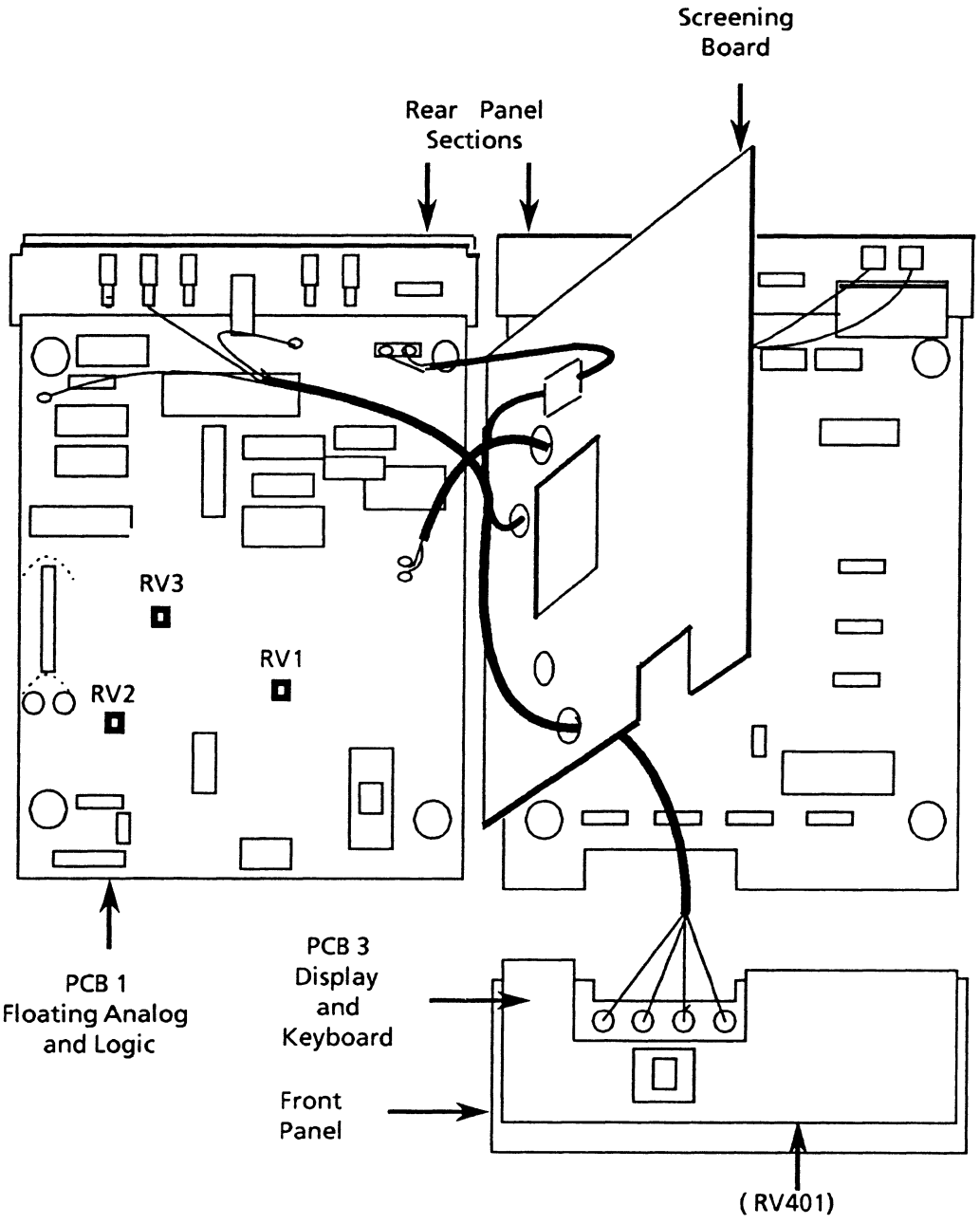

Fig 3.1 Locations of Preset Controls

7 INITIAL CALIBRATION

In the following sections, where the action is to perform a calibration of the DMM, the method using the front panel controls (as described in the Operating Manual) may be used. If these procedures are being performed with the use of software package 71506598/9 then calibration will be performed by the controller over the GP-IB bus and additional prompts will be displayed on the controller screen at the appropriate times.

Unless otherwise stated, use the Fluke 5101 Universal Calibrator.

7.1 DIRECT VOLTAGE

Test	Range & Mode	Input	Action	Limits	Comment
1.	2Vdc	+1.99999V & 0.00000V	Calibrate		Initial cal.
2.	0.2Vdc	+0.199999V & 0.000000V	Calibrate		Initial cal.
3.	20Vdc	+19.9999V & 0.0000V	Calibrate		Initial cal.
4.	200Vdc	+199.999V & 0.000V	Calibrate		Initial cal.
5.	1kVdc	+1000.00V & 0.00V	Calibrate		Initial cal. The calibrator Lo and the DMM Lo input should be mains grounded.

7.2 ALTERNATING VOLTAGE

Test	Range & Mode	Input	Action	Limits	Comment
1.	0.2Vac	0.199999V & 0.019999V 400Hz	Calibrate		Initial cal.
2.	2Vac	1.99999V & 0.19999V 400Hz	Calibrate		Initial cal.
3.	20Vac	19.9999V & 1.9999V 400Hz	Calibrate		Initial cal.

Test	Range & Mode	Input	Action	Limits	Comment
4.	200Vac	199.999V & 19.999V 400Hz	Calibrate		Initial cal.
5.	1kVac	750.00V & 199.99V 400Hz	Calibrate		Initial cal.

7.3 RESISTANCE

Notes:
1. Initial calibration requires only 2-terminal measurements.
2. On 2MΩ and 20MΩ ranges, a 0.1µF polypropylene capacitor across the input terminals may help to reduce scatter.

Test	Range & Mode	Input	Action	Limits	Comment
1.	2kΩ	1.00000k & 1 Ω	Calibrate		Initial cal.
2.	20kΩ	10.0000k & 1Ω	Calibrate		Initial cal.
3.	200kΩ	100.000k & 1Ω	Calibrate		Initial cal.
4.	2MΩ	1.00000M & 1Ω	Calibrate		Initial cal.
5.	20MΩ	10.0000M & 1Ω	Calibrate		Initial cal.

7.4 DIRECT CURRENT

Test	Range & Mode	Input	Action	Limits	Comment
1.	Idc	+1.00000A & o/c.	Calibrate		Initial cal.

7.5 ALTERNATING CURRENT

Test	Range & Mode	Input	Action	Limits	Comment
1.	Iac	1.99999A & 0.19999A 400Hz	Calibrate		Initial cal.

7.6 END OF INITIAL CALIBRATION

If manual calibration has been carried out using the front panel, then exit cal. mode to return keyboard to normal operation.

Remove calibration jack-plug and record calibration temperature.

8. INITIAL CALIBRATION CHECKS

For the following checks, all displayed measurement results from the DMM are produced with HOLD off (continuous measurements).

8.1 DIRECT CURRENT

Test	Range & Mode	Input	Action	Limits	Comment
1.	Idc	1.99999A	Measure voltage across DMM input terminals	0.8V	Burden

8.2 RESISTANCE CHECKS

Test	Range & Mode	Input	Action	Limits	Comment
1.	20kΩ	o/c	Measure current from -I into Lo on rear i/ps (front/rear sw.set to REAR)	100 ± 5µA	Refer to spec. of general purpose DMM(c.f. Sect. 2)
2.	200kΩ	o/c	As above	10.0 ± 0.5µA	As above

Test	Range & Mode	Input	Action	Limits	Comment
3.	2MΩ	o/c	Measure current from -I into Lo on rear input terminals (front/rear sw. set to rear).	1.0± 0.05μA	Refer to spec. of general urpose DMM (c.f. Sec. 2)
4.	20kΩ	o/c	Measure the o/c volts at input terminals	+5.2± 1V	Ohms source positive clamp
5.	2MΩ	240Vac	Apply for 10 seconds		Ohms overload protection test
6.	2MΩ	1.00000MΩ		1.00000MΩ ± 50 bits	Survival check for damage from previous test

8.3 DIRECT VOLTAGE CHECKS

Test	Range & Mode	Input	Action	Limits	Comment
1.	0.2Vdc shunt V-Ω Hi/Lo	10MΩ (with HOLD off)	Check reading	± 200mV	Input current measurement
2.	2Vdc	+2.00000V -2.00000V	Measure. Re-adjust RV1 if necessary	± 2 bits pos-neg.	Linearity check. Change polarity by changing over the inputs
3.	2Vdc	+1.00000V -1.00000V	Measure pos-neg.	± 2 bits	Linearity check. Change polarity by changing over the inputs
4.	Vdc	+1000V and o/c	Connect Lo and GUARD of the DMM to LO of calibrator. Apply 1000V 5 times	± 10 bits	1kVstep input test. Ensure the DMM does reset and measures within limits
			Apply 1000V	± 2 bits	Drift over

			for 1 minute.		this period should not exceed limits

8.4 ALTERNATING VOLTAGE CHECKS

Test	Range & Mode	Input	Action	Limits	Comment
1.	20Vac 200Vac	19.999V 199.999V 400Hz	Note readings		Using HP 745/6 or equivalent
2.	200Vac 20V	199.999V 19.999V 100Hz	Adjust CV1 to minimise errors between the two ranges	Typically ∠ 300 bits difference	Attenuator HF trim. Calibrator as above. Presence/absence of case lid does influence results
3.	0.2Vac	30kHz 0.199999V	Check	0.199999V ±0.000120V	
4.	0.2Vac	10kHz 0.199999V	Check	0.199999V ±0.000096V	
5.	2Vac	10kHz 1.99999V	Check	1.99999V ±0.0096V	
6.	2Vac	30kHz 1.99999V	Check	1.99999V ±0.00120V	
7.	20Vac	30kHz 19.9999V	Check	19.9999V ±0.0120V	
8.	20Vac	10kHz 19.9999V	Check	19.9999V ±0.0096V	
9.	200Vac	10kHz 199.999V	Check	199.999V ±0.096V	Using HP 745/6 or equivalent
10.	200Vac	30kHz 199.999V	Check	199.999V ±0.120V	As above
11.	1kVac	10kHz 750.00V	Check	750.00V ±0.46V	As above
12.	1kVac	30kHz 750.00V	Check	750.00V ±0.70V	As above

Test	Range & Mode	Input	Action	Limits	Comment
13.	0.2Vac	s/c	Check	≤150µV	S/c zero. Transformer laminations to be mains -grounded.
14.	2Vac	10Hz 2.00000V	Check	2.00000V ±0.01655V	HP 745
15.	2Vac	20Hz 2.00000V	Check	2.00000V ±0.00416V	HP 745
16.	2Vac	40Hz 2.00000V	Check	2.00000V ±0.00096V	HP 745
17.	2Vac	100kHz 2.00000V	Check	2.00000V ±0.0880V	HP 745
18.	0.2Vac	100kHz 0.19999V	Check	0.199999V ±0.00880V	HP 745
19.	20Vac	100kHz 20.0000V	Check	20.0000V ±0.088V	HP 745
20.	200Vac	100kHz 200.000V	Check	200.000V ±0.880V	HP 745 + HP 746
21.	Vac Auto.	750V 400Hz	Lo and Guard of DMM to be connected to Lo of calibrator. Apply input 5 times ensuring proper down-range between each application.	750.00 V ±0.46	750 Vac autorange test

9 FINAL CALIBRATION

The DMM is calibrated in a fully cased condition using the equipment itemised in Section 4, items 10 and 11. It should be placed in a 20°C environment and switched on for at least 3 hours prior to calibration. Guard and Lo inputs should be mains grounded to minimise series-mode interference when calibrating the voltage modes.

The use of screened leads is essential for Hi ohms measurement. After the calibration sequence, a re-check is performed. Limits are given in the final table.

For Vdc re-checks only, the limits apply to to the errors between the 7150plus reading and and the 7081 reading of the same input.

The Fluke 5101B calibrator is to be characterised for calibration errors every three months. Errors from cardinal values are noted and are used as corrections within the software program.

9.1 DIRECT VOLTS

Test & Mode	Range	Input	Action
1.	0.2Vdc	+0.199999V & 0.000000V	Calibrate
2.	2Vdc	+1.99999V & 0.00000V	Calibrate
3.	20Vdc	+19.9999V & 0.0000V	Calibrate
4.	200Vdc	+199.999V & 0.000V	Calibrate
5.	1kVdc	+1000.00V & 0.00V	Calibrate

9.2 RESISTANCE

Make 4-terminal measurements using rear input terminals. The DMM I+ and I- should be connected to the Calibrator 'output' and the DMM Hi and Lo to the to Calibrator 'sense'. Screened leads should be used.

Test	Range & Mode	Input	Action
1.	2kΩ	1kΩ & 1Ω	Calibrate
2.	20kΩ	10KΩ & 1 Ω	Calibrate

Test	Range & Mode	Input	Action
3.	200kΩ	100KΩ & 1 Ω	Calibrate
4.	2MΩ	1MΩ & 1 Ω	Calibrate
5.	20MΩ	10MΩ & 1 Ω	Calibrate

9.3 ALTERNATING VOLTS

All calibrations to be performed using frequencies between 400Hz and 1 kHz.

Test	Range & Mode	Input	Action
1.	0.2Vac	0.199999V & 0.019999V	Calibrate
2.	2Vac	1.99999V & 0.19999V	Calibrate
3.	20Vac	19.9999V & 1.9999V	Calibrate
4.	200Vac	199.999V & 19.999V	Calibrate
5.	1000Vac	750.00V & 150.00V	Calibrate

9.4 DIRECT CURRENT

Test	Range & Mode	Input	Action
1.	2A Idc	1.00000A & o/c	Calibrate

9.4 ALTERNATING CURRENT

All calibrations to be performed using frequencies between 400Hz and 1 kHz.

Test	Range & Mode	Input	Action
1.	2A Iac	1.99999A & 0.19999A	Calibrate

10. POST CALIBRATION CHECKS

Unless otherwise specified, all ac checks are to be performed using frequencies between 400Hz and 1kHz.

Test	Range & Mode	Input	Limits (bits)
1	20MΩ	10.0000MΩ	40
2	2MΩ	1.00000MΩ	7
3	200kΩ	100.000kΩ	5
4	20k	10.0000kΩ	5
5	2kΩ	1.00000kΩ	5
6	0.2Vac	0.199999V	70
7	2Vac	1.99999V	70
8	20Vac	19.9999V	80
9	200Vac	199.999V	80
10	1kVac	750.00V	45
11	0.2Vac	0.000000V	250
12	20Vac	19.9999V, 50kHz	300
13	0.2Vdc	0.199999V	6
14	2Vdc	1.99999V	6
15	20Vdc	19.9999V	6
16	200Vdc	199.999V	6
17	1kVdc	1000.00V	4
18	1kVdc	-1000.00	4
19	200Vdc	-199.999V	6
20	20Vdc	-19.9999V	6
21	2Vdc	-1.99999V	6
22	0.2Vdc	-0.199999V	6
23	2A Idc	+1.00000A	20
24	2A Iac	1.99999A	120

11 SAFETY CHECKS

Test	Range & Mode	Input	Action	Limits	Comments
1		1.5k max. Clare test gear	Do flash test		Safety test to IEC-348. Refer to Solartron Specification 09/00/105.02 Power sw. ON
2	Vdc Auto	See Fig. 1	Check display	± 160µV	Vdc common mode rejection 150dB. With 10kΩ
3	Vdc Auto	See Fig. 2	Check display	0± 34µV	Vac common mode rejection 140dB. With 1kΩ This test need not be done on all DMMs. Random sampling would suffice.
4	25 Amps 5 seconds		Perform continuity test	0.5Ω	Use test equipment: Clare modelA241 /CE No.30032 or equivalent
5			Fit mains fuses	250mA SLO-BLO for U.S. 100mA SLOBLO for U.K. and Europe	
6		1.5kV rms Clare test	Flash test Lo to ground		

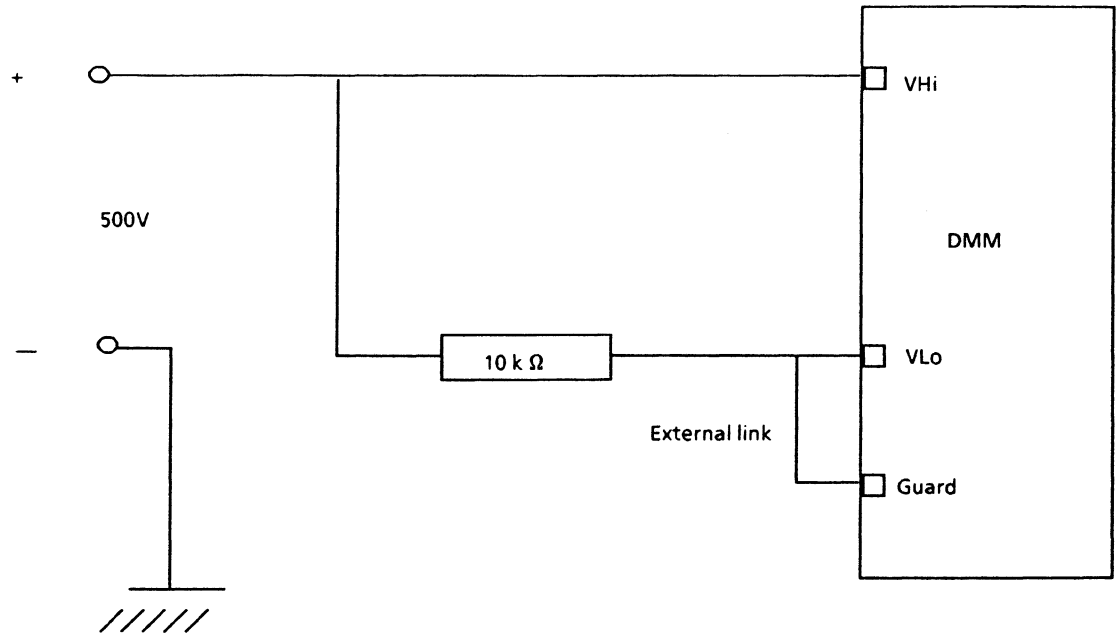

Fig. 1. Vdc Common Mode Rejection

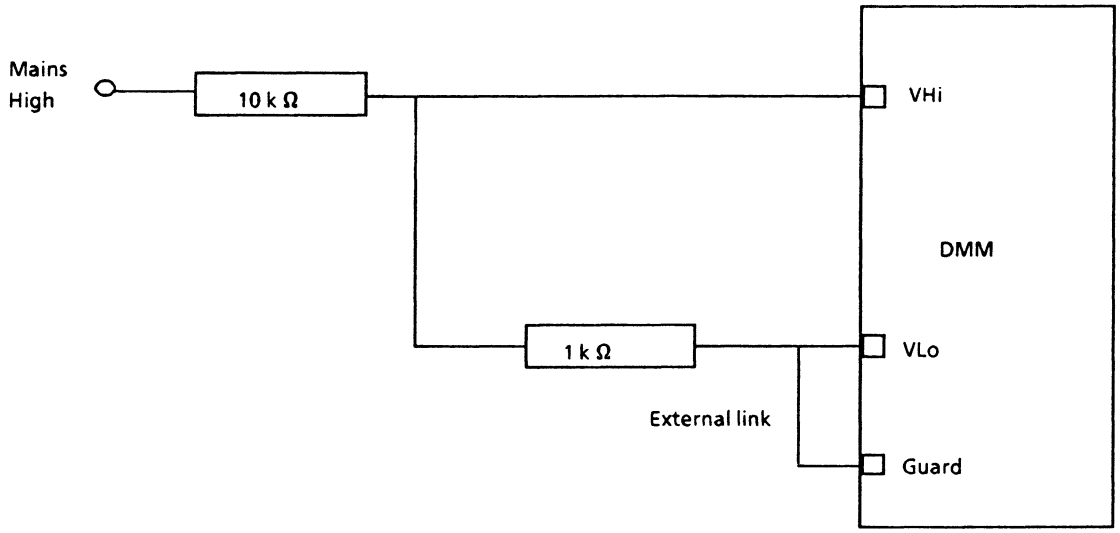

Fig. 2. Vac Common Mode Rejection

Chapter 4
Disassembly and Assembly Procedures

Section		*Page*
1	Safety	4.3
2	Disassembly	4.3
3	Assembly	4.3

Fig.

4.1	7150plus Disassembled	4.5

1 SAFTEY

The 7150plus must be disconnected from the mains supply before proceeding with these instructions.

2 DISASSEMBLY

1. Pivot the carrying handle to the rear of the case. Pull out the handle lugs from the pivot points on each side of the case and remove the handle.

2. Remove the four plastic caps and screws from the bottom of the case and then withdraw the top section of the case to expose the copper track side of pcb 1.

3. Compress the two plastic snap fasteners, located on the right hand side of pcb 1 (as viewed from the unit front) to release the pcb. Pivot the pcb outwards to gain access to the board components and to expose the screening pcb and the mains transformer.

4. Remove the two screws from the holes located in the mains transformer laminations and withdraw the complete instrument assembly from the bottom section of the case. Pcb 22 can now be accessed by unclipping the plastic stand-off fasteners which retain the screening board to the pcb.

5. At the left of the front panel assembly, remove the self- tapping screw which secures the front panel assembly to a clip on pcb 22. Unplug the front panel assembly from the pcb.

6. To gain access to pcb 3, remove the six screws which secure the pcb to the front panel. Note that pcb 3 remains attached to the front panel by the keyboard ribbon cable.

3 ASSEMBLY

1. Fit pcb 3 to the front assembly using the six screws (Sect 2, step 6).

2. Carefully plug the front panel assembly into pcb 22. Check that all of the connecting pins on the front panel assembly are correctly inserted into the socket pins on pcb 22.

3. Fit the self-tapping screw which secures the front panel assembly to pcb 22.

4. Attach the screening board to pcb 22 by using the plastic stand- off fasteners.

5. Insert the complete instrument assembly into the bottom section of the case. Insert the two screws into the holes on the mains transformer laminations and tighten to secure the bottom section of the case.

6. Secure pcb 1 by use of the two plastic snap fasteners located on the right hand side of the pcb.

7. Dress the cables on the top of the screening board clear of the holes in the board which locate the extended lugs in the top section of the case.

8. Insert the top section of the case onto the instrument assembly and secure the top section to the bottom section by the four screws inserted into the bottom section of the case.

   Note: It is important that these four screws are fully tightened otherwise the case screening is made ineffective and consequently, the ac calibration could be impaired.

9. Fit the handle by lining up the locating lugs on the handle with the pivot points on each side of the case and then press the handle lugs into the pivoting points on the case.

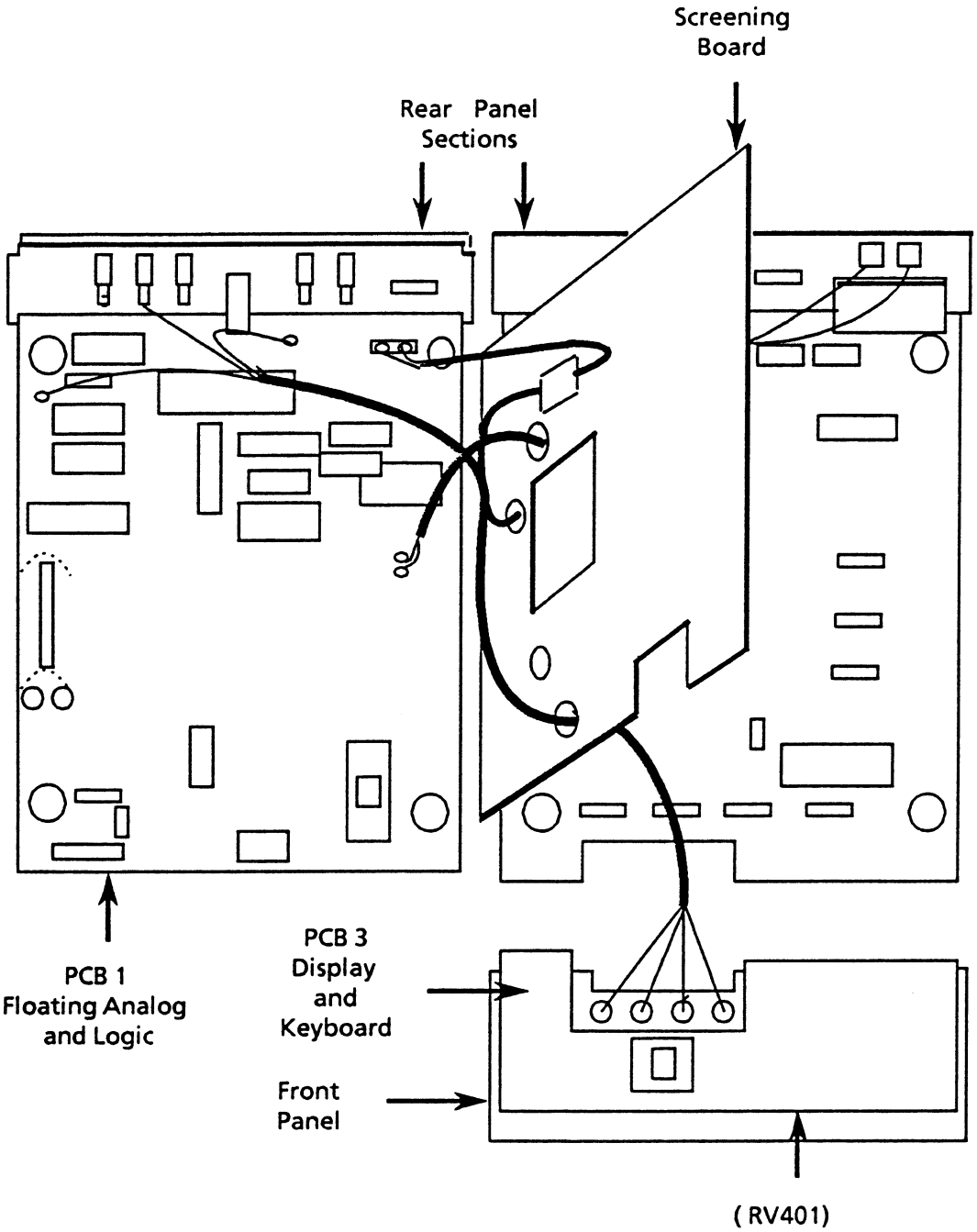

Fig. 4.1 *7150plus Disassembled*

Chapter 5
Parts Lists and Layout Diagrams

Section		*Page*
1	Introduction	5.3
2	PCB 1 (71500501) Floating Analog and Logic	5.5
3	PCB 22 (71500522) Earthy Logic	5.11
4	PCB 3 (71500503) Display and Keyboard	5.13
5	Front Panel Assembly	5.13
6	Rear Panel Assembly	5.14
7	Power Supplies	5.14

Fig.		
1	PCB 1 Component Location	5.15
2	PCB 22 Component Location	5.17
3	PCB 3 Component Location	5.19

1 INTRODUCTION

This section contains component layout diagrams and detailed parts lists for each of the three printed circuit boards and the front and rear panels. When ordering spare parts, it is essential to quote the instrument serial number located on the rear panel as well as the full description of the item given in the appropriate parts list.

A description of the abbreviations used in the parts list is given overleaf.

COMPONENT PARTS LIST ABBREVIATIONS

CIRCUIT REFERENCES

AE	Aerial
B	Battery
C	Capacitor (µF)
CSR	Controlled Silicon Rectifier (thyristor)
CV	Capacitor, Variable (µF)
D	Diode
FS	Fuse
HS	Heatsink
IC	Integrated Circuit
JP	Jumper
L	Inductor
LK	Link
ME	Meter
MSP	Mains Selector Panel
PL	PLug
R	Resistor (Ω)
RE	Recording Instrument
RL	Relay
RNL	Resistor, Non-linear (Ω)
RP	Resistor Pack (Ω)
RV	Resistor, Variable (Ω)
S	Switch
SK	Socket
T	Transformer
TP	Test Point (or Terminal Post)
TR	Transistor
V	Valve
ZD	Zener Diode

COMPONENT TYPES

Fixed Resistors

CACP	Carbon Composition
CAFM	Carbon Film
CKCA	Cracked Carbon
MEFM	Metal Film
MEGL	Metal Glaze
MEOX	Metal Oxide
POWW	Power, Wirewound
PRWW	Precision, Wirewound
TEMP	Temperature Sensitive
TKFM	Thick Film
TNFM	Thin Film
VOLT	Voltage Sensitive

Variable Resistors

CAFM	Carbon, Front Panel, Multiturn
CAFS	Carbon, Front Panel, Single Turn
CAPM	Carbon, Preset, Multiturn
CAPS	Carbon, Preset, Single Turn
CMFM	Cermet, Front Panel, Multiturn
CMFS	Cermet, Front Panel, Single Turn
CMPM	Cermet, Preset, Multiturn
CMPS	Cermet, Preset, Single Turn
WWFM	Wirewound, Front Panel, Multiturn
WWFS	Wirewound, Front Panel, Single Turn
WWPM	Wirewound, Preset, Multiturn
WWPS	Wirewound, Preset, Single Turn

Capacitors

AIR	Air
ALME	Aluminium Electrolytic
ALMS	Aluminium Solid
CARB	Polycarbonate
CERM	Ceramic
ESTF	Polyester Foil
ESTM	Polyester, Metallised
GLAS	Glass
MICA	Mica
MLAC	Metallised Lacquer
PAPF	Paper Foil
PAPM	Paper Metallised
PTFE	Polytetrafluoroethylene
PYLN	Polypropylene Film
STYR	Polystyrene
TAND	Tantalum, Dry
TANF	Tantalum Foil
TANW	Tantalum, Wet

PCB 1 (71510501) FLOATING ANALOG AND LOGIC

Cct Ref.	General Description				Schlumberger Part No.
R1	TKFM	CAD 1776			
R2	MEOX	1k	0.25W	5%	195631000
R3	PRWW	0.1		0.5%	160300506
R4	MEGL	22k	3W	5%	176442200
R5	CACP	10k	0.5W	10%	172341000
R6	MEFM	1.2k	0.125W	0.5%	192731202
R7	MEFM	30.9k	0.125W	0.25%	192843094
R8	MEOX	100k	0.25W	5%	195651000
R9	MEGL	47k	3W	2%	175244700
R10	MEFM	990k	2W	0.5%	160400487
R11	TKFM	1k+9k	0.2W	0.1%	160400582
R12	MEOX	3.3k	0.25W	5%	195633300
R13	MEOX	1k	0.25W	5%	195631000
R14	-	1452	matched		
R15	-	9k	pair.	0.25%	169617201
R16	TKFM	CAD1776k			160400583
R17	MEFM	10k	0.125W	0.5%	192741002
R18	-	9k	matched		
R19		1k	pair	0.25%	169617001
R21	TKFM	1k+9k	0.2W	0.1%	160400582
R20		100k	matched .		169617101
R24	-	67k	pair		
R22	MEOX	33k	.25W	5%	195643300
R23	MEFM	30k	0.125W	0.5%	192743002
R25	MEGL	47k	3W	2%	175244700
R26	MEOX	33k	0.25W	5%	195643300
R27	MEFM	280k	0.125W	0.25%	192852804
R28	MEOX	1k	0.25W	5%	195631000
R29	MEOX	100	0.25W	5%	195621000
R30	MEOX	100k	0.25W	5%	195651000
R31	MEOX	100k	0.25W	5%	195651000
R32	MEOX	22k	0.25W	5%	195642200
R33	MEOX	1k	0.25W	5%	195631000
R34	MEOX	100	0.25W	5%	195621000
R35	MEOX	4.7k	0.25W	5%	195634700
R36	MEOX	4.7k	0.25W	5%	195634700
R37	CACP	470k	0.5W	10%	172354700
R38	MEFM	10k	0.125W	0.5%	192741002

PCB1 (CONTINUED)

Cct Ref.	General Description				Schlumberger Part No.
R39 to R41	MEOX	33k	0.25W	5%	195643300
R42	MEFM	100	0.125W	0.5%	192721002
R43	MEOX	4.7k	3W	5%	193734700
R44	CACP	470k	0.5W	10%	172354700
R45	MEOX	100k	0.25W	5%	195651000
R46	MEOX	1k	0.25W	5%	195631000
R47	MEOX	1M	0.5W	5%	193561000
R48	MEOX	100k	0.25W	5%	195651000
R49	MEFM	200k	0.125W	0.5%	192752002
R50	MEFM	1M	0.25W	0.5%	198261002
R51	MEFM	62k	0.125W	0.5%	192746202
R52	MEOX	33k	0.25W	5%	195643300
R53	MEOX	1k	0.25W	5%	195631000
R54	MEOX	56	0.25W	5%	195615600
R55	CACP	10k	0.5W	10%	172341000
R56	CACP	2.7M	0.125W	10%	172062700
R57	MEFM	10k	0.125W	0.5%	192741004
R59	MEFM	27k	0.125W	0.5%	192742702
R61	MEOX	180	0.25W	5%	195621800
R62	MEOX	180	0.25W	5%	195621800
R63	MEOX	10k	0.25W	5%	195641000
R64	MEOX	22k	0.25W	5%	195642200
R65	MEOX	22k	0.25W	5%	195642200
R66	MEOX	82k	0.25W	5%	195648200
R67	MEFM	22k	0.125W	0.5%	192742202
R68	MEFM	22k	0.125W	0.5%	192742202
R69	MEOX	1k	0.25W	5%	195631000
R70	MEFM	4.7k	0.125W	0.5%	192734702
R71	MEFM	15k	0.125W	0.5%	192741502
R72	MEOX	1M	0.5W	5%	193561000
R73	PRWW	10k	0.2W	0.25%	160300505
R74	PRWW	90k	0.2W	0.01%	160300438
R75	PRWW	900k	o.3W	0.25%	160300504
R76 to R79	CACP	1M	0.25W	10%	172061000
R80	MEOX	100	0.25W	5%	195621000
R81	MEOX	100	0.25W	5%	195621000
R82	MEFM 33	0.125W		0.5%	192713302

PCB1 (CONTINUED)

Cct Ref.	General Description				Schlumberger Part No.
R101	MEOX	15k	0.25W	5%	195641500
R103	MEOX	270	0.25W	5%	195622700
R104	MEOX	1.5k	0.25W	5%	195631500
R105	MEOX	100	0.5W	1%	195421000
R106	MEOX	100	0.25W	5%	195621000
R151	MEOX	47k	0.25W	5%	195644700
R152	MEOX	180	0.25W	5%	195621800
RV1	CMPM	200	0.5W	10%	130922000
RV2	CMPM	200k	0.5W	10%	110016220
RV3	CMPM	2k	0.5W	10%	130932000
C1	CERM	200p	500V	20%	241322200
C2	ESTM	0.22	400V	20%	226152200
C3	ESTF	0.01	1000V	10%	222841000
C4		470p			208100201
C5	ESTF	22n	400V	10%	222342200
C6	ESTM	15n	100V	10%	225441500
C7	ESTM	0.47	100V	10%	225454700
C8	ESTM	0.22	100V	10%	225452200
C9	ESTF	15n	400V	10%	222341500
C10	CERM	47n	25V	25%	241944700
C11	CERM	47n	25V	25%	241944700
C12	CARB	100p	160V	20%	208900004
C13 to C15	CERM	47n	25V	25%	241944700
C16	ESTM	1	100V	10%	225461000
C17	ESTM	2.2	100V	10%	225462200
C18 to C21	CERM	47n	25V	25%	241944700
C22	TAND	10	25V	20%	208700108
C23	TAND	10	25V	20%	208700108
C24	CERM	6.8p	500V	20%	241306800
C25	CERM	47n	25V	25%	241944700
C26	CERM	47p	500V	20%	241314700
C27	CERM	150p	500	20%	241321500
C28	CERM	47p	500V	20%	241314700
C29	ESTM	4.7	63V	10%	225164700
C30	CERM	47n	25V	25%	241944700
C31	CERM	47n	25V	25V	241944700

PCB1 (CONTINUED)

Cct Ref.	General Description				Schlumberger Part No.
C32 to C35	CERM	10n	25V	25%	241941000
C36 to C39	CERM	220p	500V	20%	241322200
C40	CERM	10n	25V	25%	241941000
C41	CERM	47n	25V	25%	241944700
C42		33n			208100207
C101	CERM	33p	500V	20%	241313300
C102	CERM	33p	500V	20%	241313300
C103	TAND	22	16V	20%	208700106
C104 to C108	CERM	47n	25V	25%	241944700
C109	CERM	47n	25V	25%	241944700
C110	CERM	47n	25V	25%	241944700
C111	CERM	47n	25V	25%	241944700
C112	CERM	100p	500V	20%	241321000
C151	ALME	2200	16V		273392200
C152	ALME	200	16V		273382200
C153	ALME	1000	40V		273791000
C154	ALME	470	40V		273784700
C155	ALME	100	25V		273581000
C156	ALME	100	25V		273581000
C158 to C161	TAND	1	35V	20%	266061000
C163	CERM Multi-layer	100n	50V	20%	208450140
CV1	PTFE	2-14p			290060030
D1	SD3				300522160
D2	WR057				300525770
D3	SD3				300522160
D4	BZY88 Zen. 400mW		5.6V		300521450
D5	BZY88 Zen. 400mW		8.2V		300521330
D6	WR057				300525770
D7	IN4577				300525050
D8 to D15	SD3				300522160

PCB1 (CONTINUED)

Cct Ref.	General Description				Schlumberger Part No.
D16	IN3595				300523590
D17	IN3595				300523590
D18	SD3				300522160
D19	SD3				300522160
D20	IN829A Zen.	400mW	6.2V Ref.		300525400
D21	SD3				300522160
D22	SD3				300522160
D25	WR057				300525770
D26	WR057				300525770
D27	BZY88 Zen.	400mW	20V		300523790
D28	SD3				300522160
D101	SD3				300522160
D151	W04	400V			300524700
D152	W04	400V			300524700
D153	IN4004				300522070
D154	IN4004				300522070
D156	BZY88 Zen.	400mW		5%	300523790
D157	SD3				300522160
TR1	3N163				300554530
TR2	3N163				300554530
TR3	3N163				300554530
TR4 to TR6	WN1001				300555770
TR7	PN4118A				300555880
TR8	WN1001				300555770
TR9	WN1001				300555770
TR10	U1897				300553800
TR11	BCY70				300553590
TR12	WN1001				300555770
TR13	WD460				300555820
TR14	BC183				300555590
TR101	BC183				300555590
IC1	OP14	Op. Amp.(matched withIC6)			510091360
IC2	DG211	Quad. Analog SPST switch			510091180
IC3	AD545K	Precision FET Op. Amp.			510090741
IC4	OP05	Op.Amp.			510091130

PCB1 (CONTINUED)

Cct Ref.	General Description		Schlumberger Part No.
IC5	DG211	Quad. Analog SPST switch	510091180
IC6	OP-14	Op. Amp.(matched withIC1)	510091360
IC7	DG211	Quad. Analog SPST switch	510091180
IC8	OPO5	Op. Amp.	510091130
IC9	LM311	Voltage Comparator	510091280
IC10	LM311	Voltage Comparator	510091280
IC11	74LS175		510003170
IC12	LM339	Quad O/Collector Comparator	510090490
IC13	ULN2003		510004980
IC14	LM339	Quad O/Collector Comparator	510090490
IC15	AD528J	FET Op. Amp.	510090380
IC16	DG200	Dual Analog Switch	510091170
IC17	74LS00	Quad Dual i/p Nand Gate	510002000
IC18	DG211	Quad. Analog SPST switch	510091180
IC21	AD637K	RMS-to-DC Converter	510091460
IC102	74LS04	Hex. Inverters	510002690
IC103	HD68P01V05P Microprocessor		510006250
IC104	Resistor Pack 6.8k		160400569
IC105	NC7033		510005150
IC106	NC7033		510005150
IC107	4040BE	12-Stage Ripple Counter	510001820
IC108	74LS197	4-Bit Binary Counter	510005750
IC151	7815 CKC	15V 0.5A pos. Voltage Reg.	510090320
IC152	LM340T5	5V 0.5A pos. Voltage Reg.	510090500
IC153	79L05ACZ	5V 0.1A neg. Voltage Reg.	510090950
IC154	7915	15A neg. Voltage Reg.	510090330
IC155	19L05ACZ	5V 0.1A neg. Voltage Reg.	510090950
IC157	TIL 117	Opto Transistor	300540240
PH151	Header 8- way 0.1" Pitch		352308060
SG1	Ceramic Surge Voltage Protector 1400V		300011470
FH	Fuse Holder		360206040
F1	Fuse 2A 5mm x 20mm		360106150
RLA	Coto 4000-0002		301203400
RLB	Coto 7002-5005		301203300
RLC	Coto 7002-5085		301203500
RLD	Coto 7002-5086		301203600
RLE	Coto 4000-0002		301203400
RLF	RS12		300652190
RLK	Coto 7002-5085		301203500

PCB1 (CONTINUED)

Cct Ref.	General Description	Schlumberger Part No.
X101	4.9152MHz Crystal, 30pF 0.01%	300810590
TP1 to TP4	Test Hook	355400760

3. PCB 22 (71500522) EARTHY LOGIC

Cct Ref.	General Description				Schlumberger Part No.
R501A	MEOX	12k	0.25W	5%	195641200
R502A	MEOX	12k	0.25W	5%	195641200
R505A	MEOX	270	0.25W	5%	195622700
R506	MEOX	3.3k	0.25W	5%	195633300
R507	MEOX	1k	0.25W	5%	195631000
R508	CACP	10	0.125W	10%	172011000
R509	MEOX	15k	0.25W	5%	195641500
R510	MEOX	1k	0.25W	5%	195631000
R511	MEOX	1k	0.25W	5%	195631000
R512	GPMF	100	0.25W		195321000
R513	GPMF	100	0.25W		195321000
R514	GPMF	4.7k	0.25		195334700
R515	GPMF	270	0.25		195622700
C307	ALME	2200	16V		273392200
C312	ALME	2200	16V		273392200
C501	CERM	33p	500V	20%	241313300
C502	CERM	33p	500V	20%	241313300
C503	CERM	47n	25V	+50% -25%	241944700
C504 to C511	CERM	47n	25V	+50% -25%	241944700
C512A	CERM	47n	25V	+50% -25%	241944700
C513A	CERM	47n	25V	+50% -25%	241944700
C514	CERM	1n	500V	20%	241331000
C515	CERM	10n	25V	+ 50% -20%	241941000
C516	CERM	10n	25V	+ 50% -25%	241941000
C517	CERM	1n	500V	20%	241331000

PCB 22. (CONTINUED)

Cct Ref.	General Description			Schlumberger Part No
D305	W04		400V	300524700
D501	SD3			300522160
D502	SD3			300522160
D503 to D506	SD3	0.075A	75V	300522160
IC306	LM340T5			510090500
IC501	MC3447			510005700
IC502	MC3447			510005700
IC503	MC68488			510004291
IC506	TC5516			510005470
IC508	27128-30			510006271
IC509	LS373			510004870
IC510	HD6303P			510006170
IC511	LS374			510004390
IC512	LS138			510003530
IC513	LS145			510004990
IC514	AB316A682			160400569
IC515	LS132			510002980
IC516	MC14040			510001820
IC517	LS197			510005750
IC518A	HCPL 2601			300540260
IC519A	HCPL 2601			300540260
IC520	LS04			510002690
S1	Switch			375000600
SK501	GPIB socket			352524320
PH501A	4 - Way Header post			352304080
PH502	2 - Way Header post			352302080
T301	Transformer			309617106
IC503	Socket, 40-pin DIL			300585190
IC508	Socket, 28-pin DIL			300585160
IC510	Socket			300585190
TP 1 to TP6	Test Hook			355400760
TP8	Test Hook			355400760
TP9	Test Hook			355400760

PCB 22. (CONTINUED)

Cct Ref.	General Description	Schlumberger Part No.
LK1A	TCW, 22 SWG	480080080
X501	4.9152 MHz Crystal	300810590

4. PCB 3 (71500503) DISPLAY AND KEYBOARD

Cct Ref.	General Description				Schlumberger Part No.
R401	MEOX	180k	0.25W	5%	195651800
R402	MEOX	1.8k	0.25W	5%	195631800
R403	MEOX	1.2k	0.25W	5%	195631200
R404	MEOX	270	0.25W	5%	195622700
R405	MEOX	270	0.25W	5%	195622700
RV401	CMPM	10k	0.5W	10%	130641000
C401	CERM	47n	25V	+50% -25%	241944700
C402	CERM	47n	25V	+50% -25%	241944700
D401 to D404	LED HP5082 - 4558				300750270
TR401	BC183				300555590
IC401	NEC 7225G				510005890
IC402	74LS145				510004990
IC403	316B 6.8k				192136800
SK402	25-way				352525090
SK403	25-way				352525090
KB401	Keyboard Matrix				71502019A
X401	Liquid Crystal Display				71502006A

5. FRONT PANEL ASSEMBLY

Cct Ref.	General Description	Schlumberger Part No.
Socket	Red, 4mm	352501470
Socket	Black, 4mm	352501480
Socket	Brown, 4mm	352501750
Socket	Green, 4mm	352501490

6. REAR PANEL ASSEMBLY

Cct Ref.	General Description		Schlumberger Part No.
R303	Resistor 1MΩ		172361000
FH1	Fuse Fast Blow	2A	360106150
	Fuse Slow Blow	100mA	360106260
S301	Mains switch		375500030
	Socket Jack		352501740
	Mains Input Unit - Schaffner FN372		550001480
Socket	Red 4mm		352501470
Socket	Black 4mm		352501480
Socket	Green 4mm		352501490
Socket	Blue 4mm		352501710
Socket	Yellow 4mm		352501720

7. POWER SUPPLIES

The power supply components are distributed between PCB 1, PCB 22 and the rear panel, refer to the appropriate parts list.

8. ACCESSORIES

The 7150plus is supplied with the following accessories:

General Description				Schlumberger Part No.
Mains cable (UK)				359900380
Mains cable (USA & Canada)				359900390
Mains cable (Europe)				359900250
Mains cable (Other)				480140220
Set of test leads and probes				359900360
Calibration Jack plug				351302120
Calibration Overlay				71502070A
5-Pin Din Plug				351305070
Fuses	Slow Blow	100mA	Glass 20 x 5 mm	360106260
	Fast blow	2A	Glass 20 x 5 mm	360100150
	750VDC	250 mA	Glass 1.25 x 0.25	360103050
Fuse Holder Size 0		1.25 x 0.25		360208150
Operating Manual				71500024

9. OPTIONS

The following Options are available for 7150plus:

Radio Frequency Probe	70457F
High Voltage Probe	70457E
Current Shunt	70457X
Temperature Probe, Insertion	71517A
Temperature Probe, Surface	71517B
Rack Mounting Kit	71501
Maintenance Manual	7150026
Nato Connection Set	71517C
Carrying Case	71509A

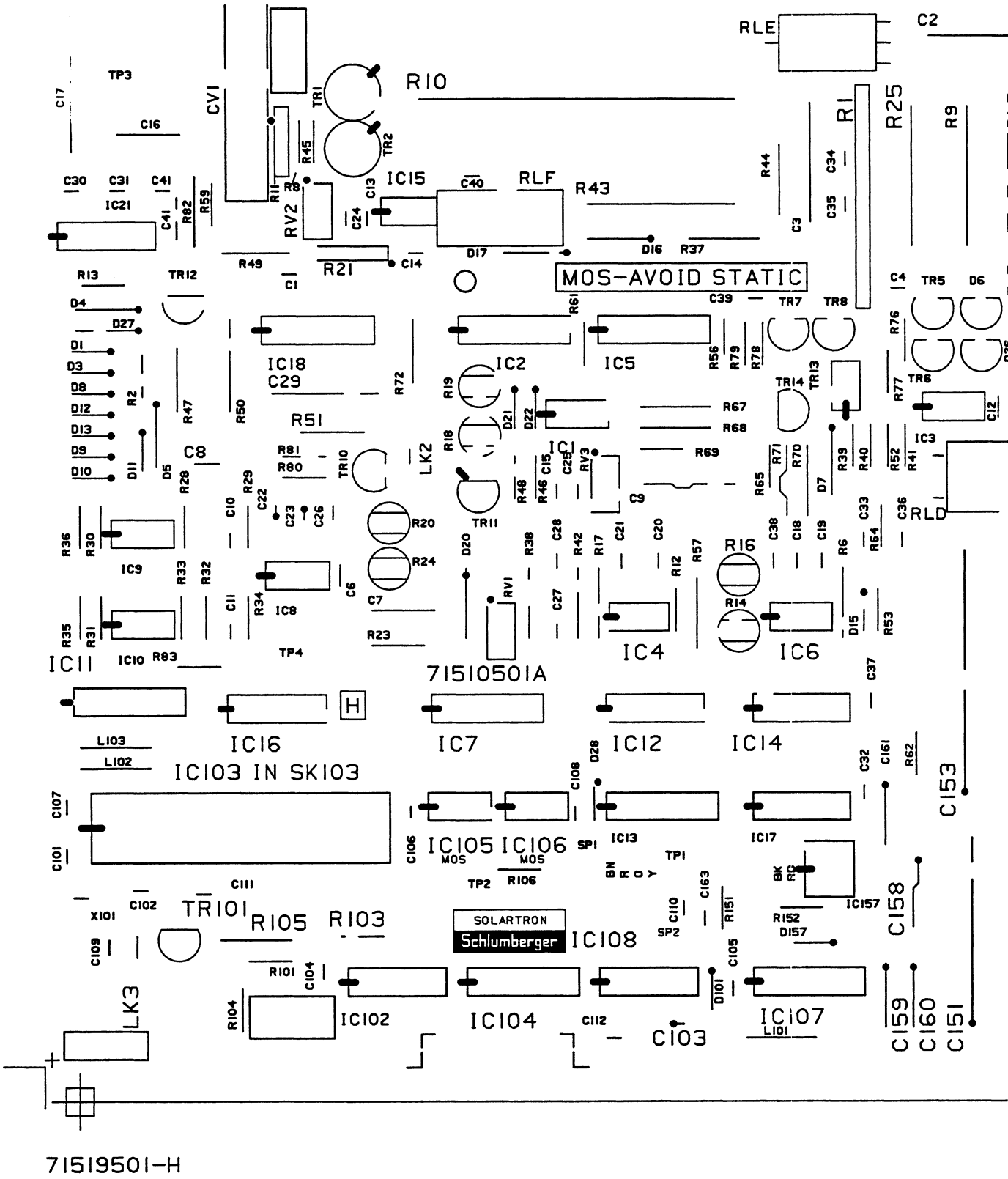
MOS-AVOID STATIC
SOLARTRON
Schlumberger
IC103 IN SK103
71510501A
71519501-H

Fig 5.

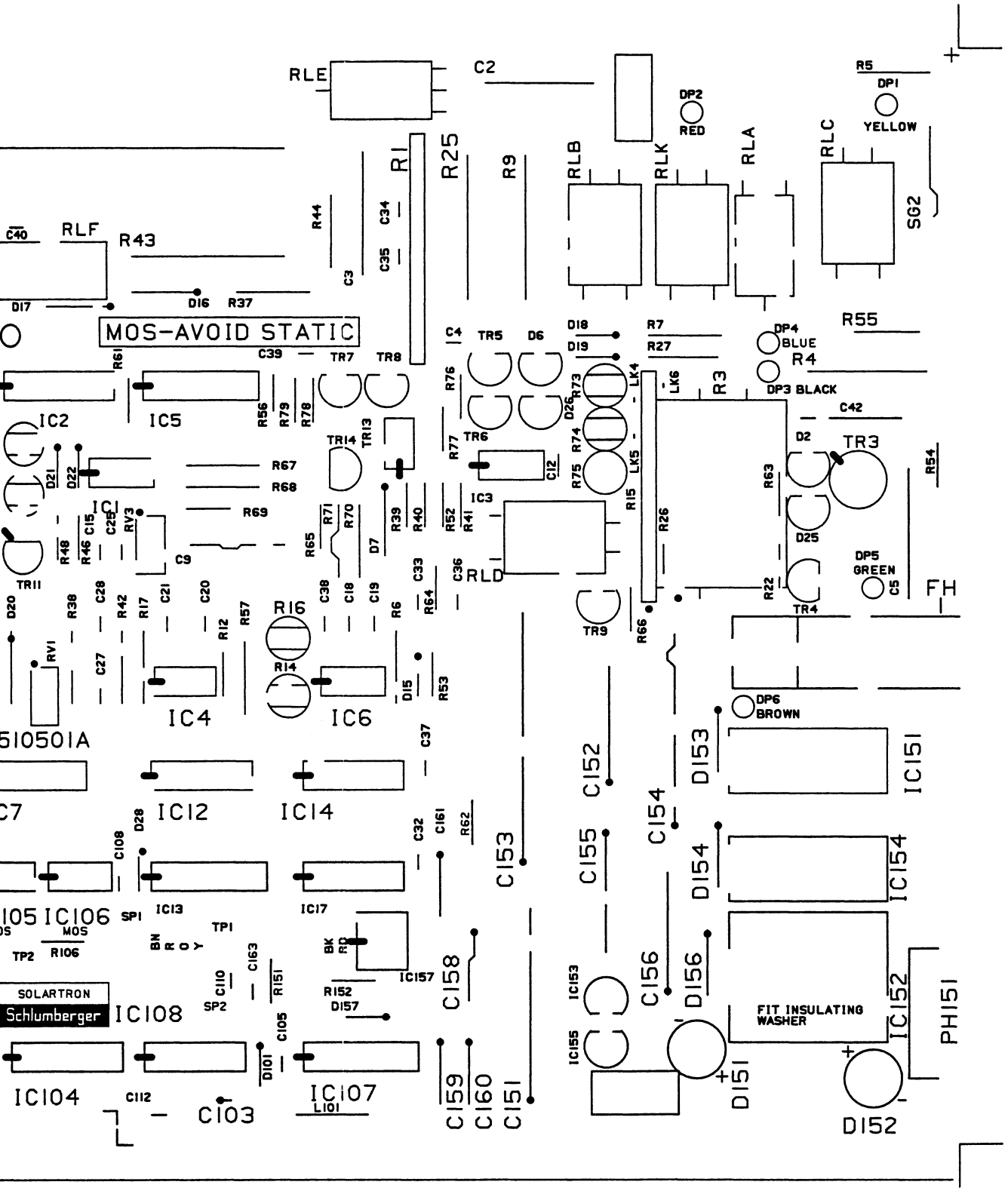

Fig 5.1 *PCB 1 COMPONENT LAYOUT*

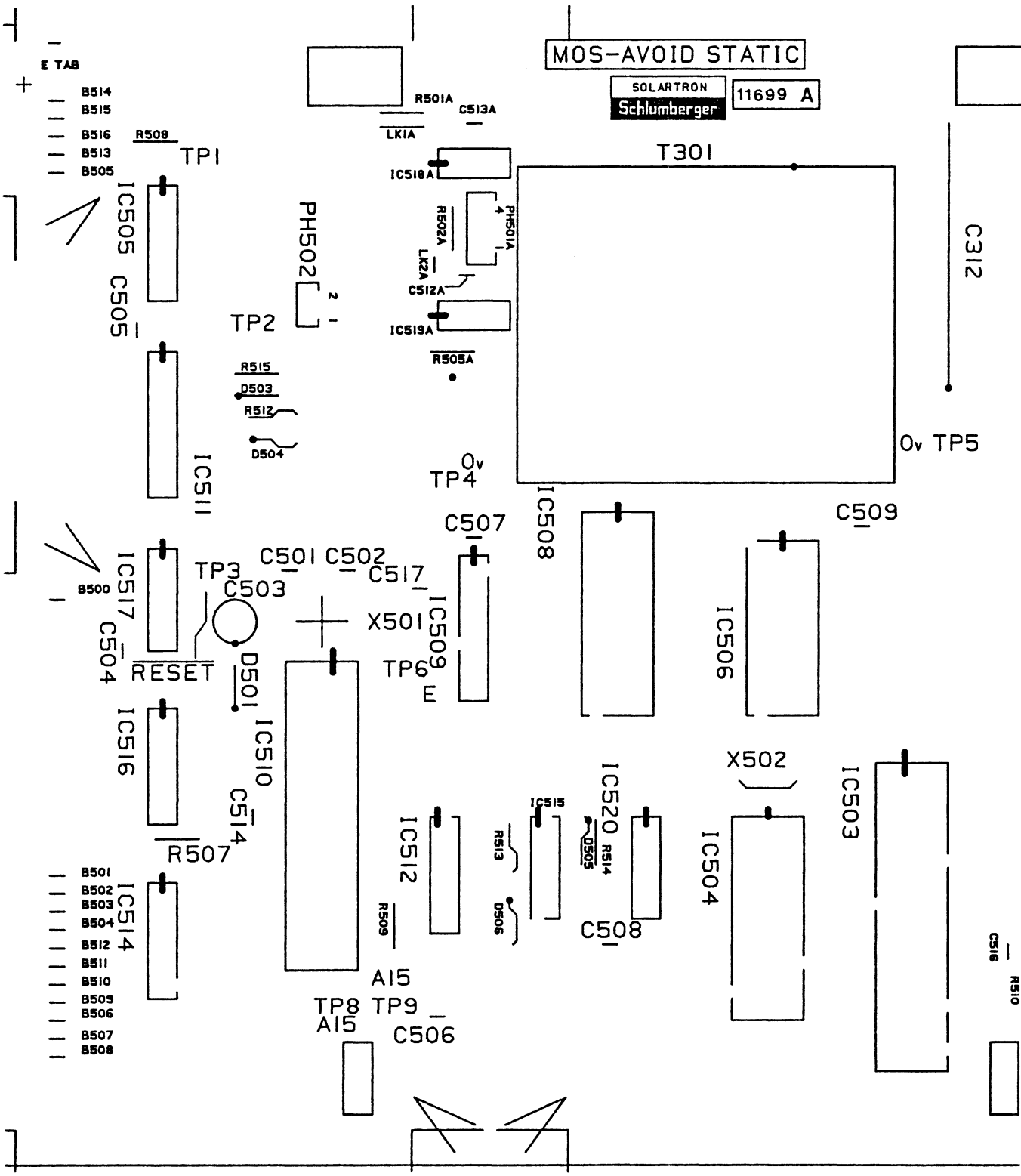
MOS-AVOID STATIC
SOLARTRON
Schlumberger
11699 A
E TAB
B514
B515
B516
B513
B505
R508
TP1
IC505
C505
R501A
C513A
LK1A
IC518A
T301
PH502
R502A
PH501A
LK2A
C512A
IC519A
R505A
TP2
R515
D503
R512
D504
IC511
C312
0v TP5
0v
TP4
IC508
C507
C509
IC517
B500
TP3
C503
C501 C502
C517
X501
IC509
TP6
E
IC506
C504
RESET
D501
IC516
IC510
C514
R507
IC512
IC515
R513
D506
IC520
D505
R514
C508
X502
IC504
IC503
B501
B502
B503
B504
B512
B511
B510
B509
B506
B507
B508
IC514
R509
A15
TP8 TP9
A15
C506
C516
R510

Fig 5.2

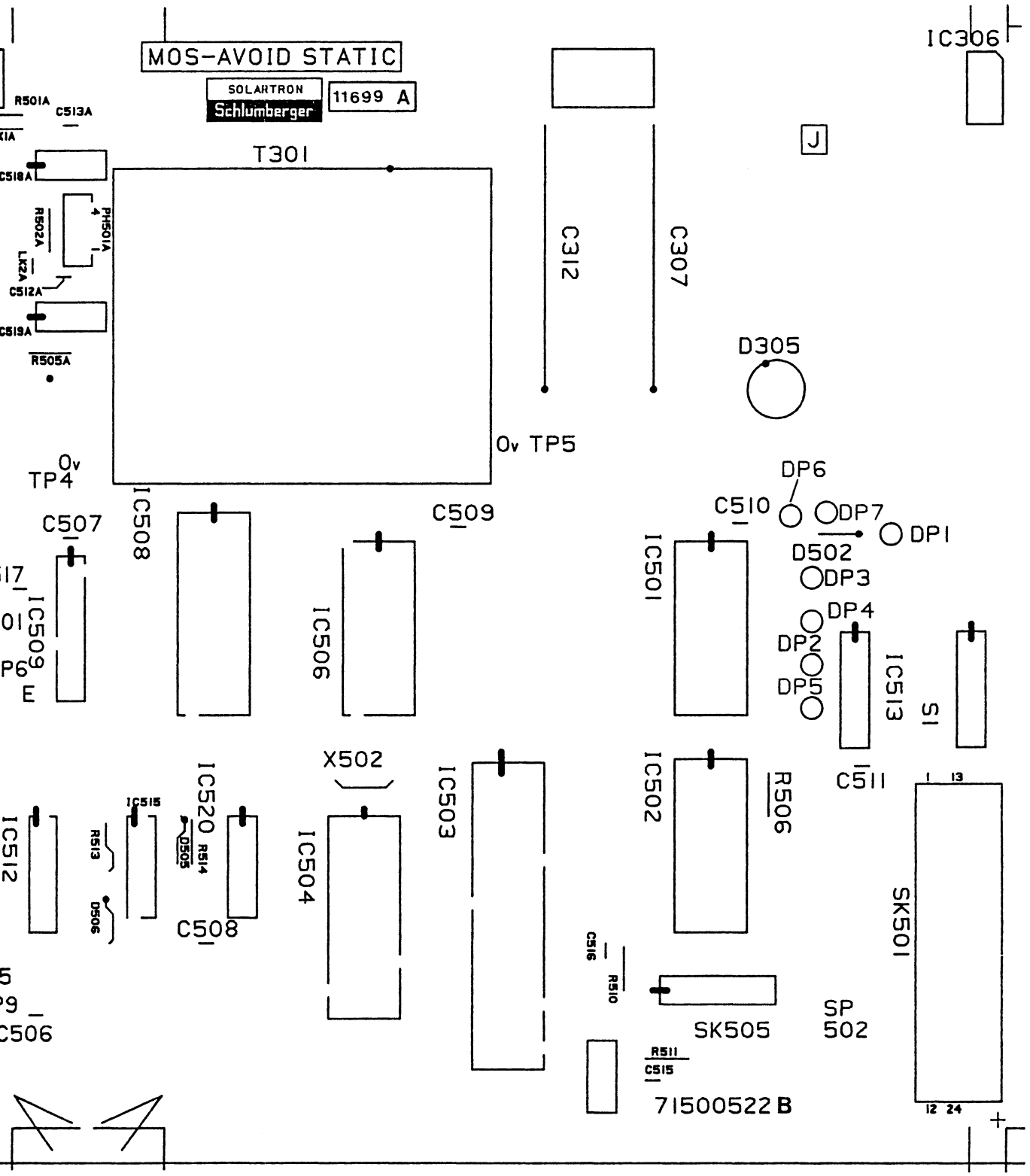

Fig 5.2 *PCB 22 COMPONENT LAYOUT*

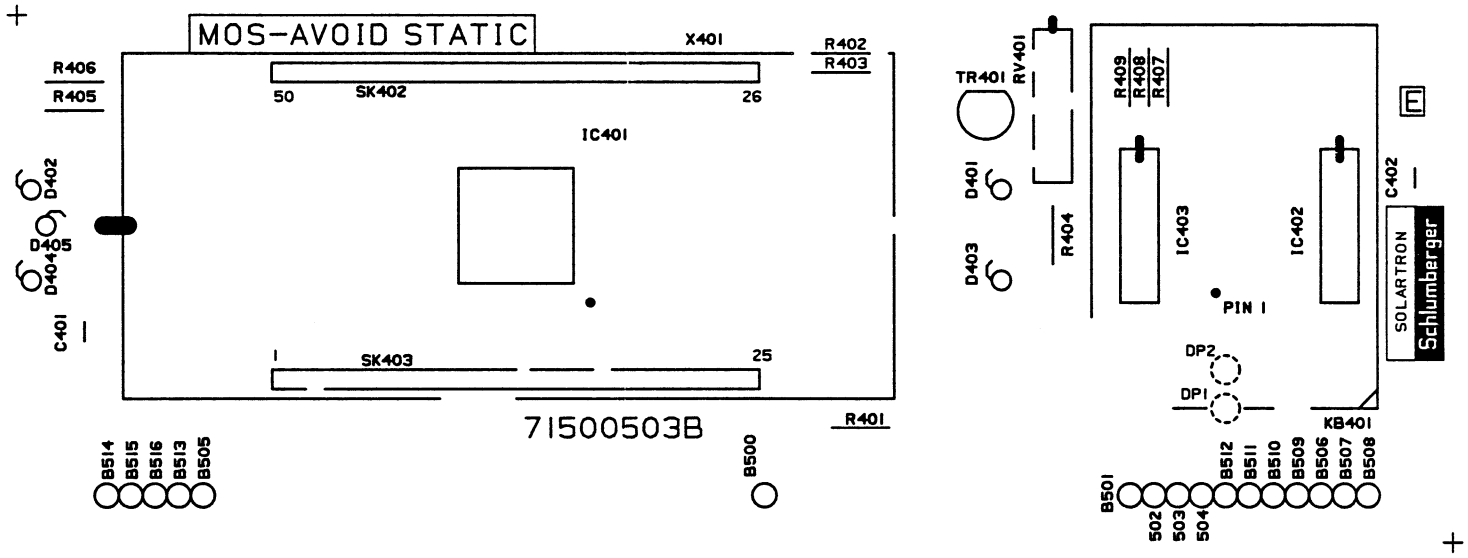

Fig 5.3 *PCB 3 COMPONENT LAYOUT*

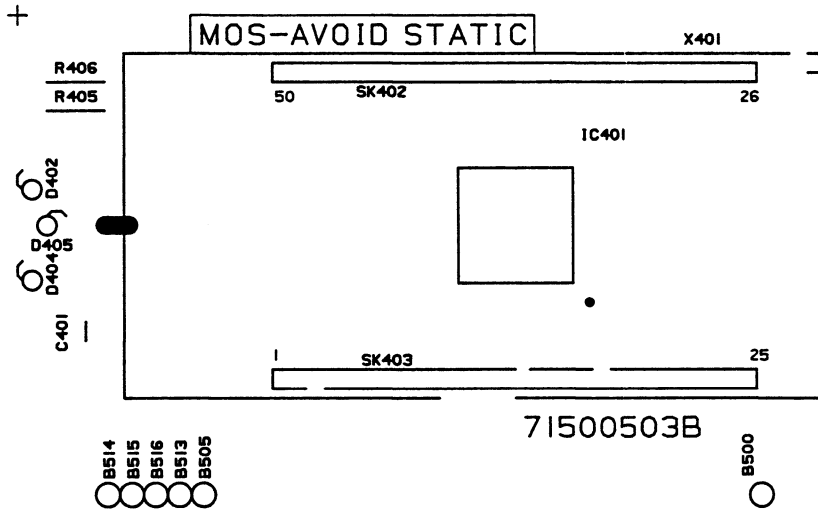
MOS-AVOID STATIC
X401
R406
R405
50
SK402
26
IC401
D402
D405
D404
C401
1
SK403
25
71500503B
B514
B515
B516
B513
B505
B500

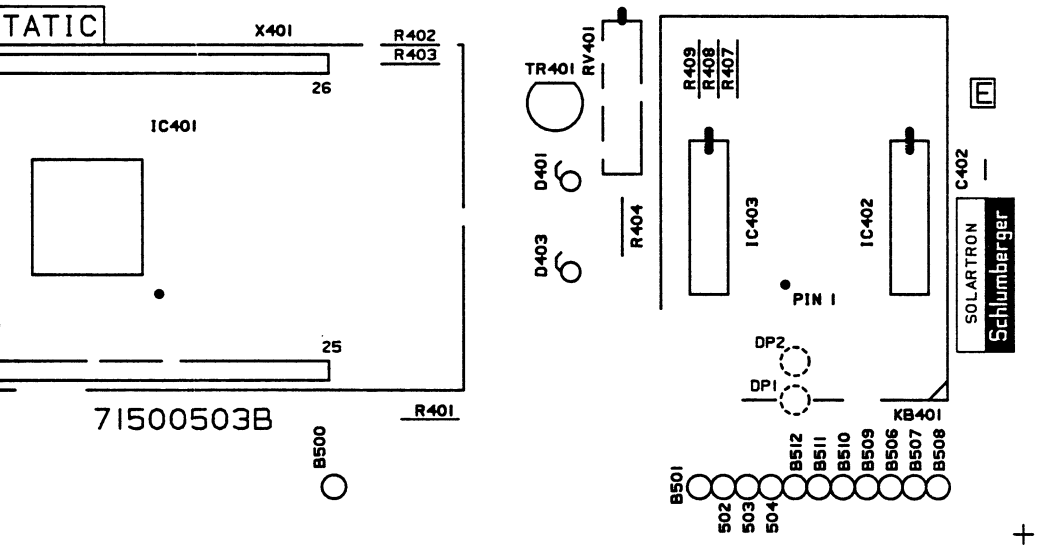

Fig 5.3 *PCB 3 COMPONENT LAYOUT*

Chapter 6
Fault Diagnosis Guide

Section		*Page*
1	General	6.3
2	GP-IB	6.4
2	Pcb 22	6.4
3	Pcb 1	6.5

1. GENERAL

Symptom	Possible Fault	Procedure
Instrument 'dead'	No Mains power	A good check is to look for the display back lights. If no lights, check fuses and supply voltages.
Fuses keep blowing	Rectifier, regulator or smoothing capacitor faulty	Check current drawn from mains for 240V on 240V setting (approx. 60mA) and for 120V on 120V setting (approx. 120mA). Under fault conditions, eg, regulator blown, current may be typically 500mA. Look for correct output from each regulator IC.
'Fail 1' displayed on power-up.	Communication breakdown between floating and earthy logic.	Check opto-couplers IC518 and IC519, IC 102 and the connecting wires and plugs (to pcb 1). Check for activity on the TX and RX lines.
'Fail 3' displayed on power-up. [Note Fail 2 is not applicable to 7150plus]	Internal RAM failure	Check IC506 and its connections .
'Fail 4' displayed on power-up.	PROM failure	Check IC508 and its connections.
Amps range inoperative	2A fuse on rear panel blown.	Check fuse.
Display inoperative	Poor connections between display and IC301.	Check LCD pin connections in sockets and ensure good contact.
Display sluggish or too faint	Contrast setting needs adjustment.	Check setting of RV 401
Calibration routine completed butDMM still out of calibration	New cal. constants have not been stored in ICs 105and 106	Check that -25V is produced by IC157 pin 5 when cal. plug is fitted and that it reaches ICs105 and 106 pin 1.

2. GP-IB

Symptom	Possible Fault	Procedure
GP-IB inoperative	Wrong switch setting	Ensure GP-IB switch (S1) is switched ON and thathe desired address is set (Switch power OFF, then ON and observe displayed IEEE address).
	Faulty switch contacts on S1.	If no address appears after carrying out the above,toggle the switches several times, to clear contacts then try switching OFF/ON again.
GP-IB Intermittent operation.	DMM set to same address as another bus devices.	Ensure each device (including controller) has a unique address
	Poor connections	check GP-IB sockets and cables for good connections. Check that socket pins are not damaged.

It is possible that a fault will not fall into one of the above categories and it will be difficult to decide where to start looking; however, for pcb 1 and pcb 22 there are some basic checks that can be carried out to help narrow the search.

3. Pcb 22

1. Check all power supplies are within tolerance. (See Chapter 3)
2. Check that waveform E at IC510, pin 40 is a 1.2288MHz square wave.
3. Check that the RESET line is high.
4. Check that there is activity on the TX and RX lines between pcbs 1 and 22 (via opto-couplers) at IC510 pins 11 and 12. (See 'Fail 1')

4. PCB 1

1. Check all power supplies are within tolerance. (See Chapter 3)
2. Check that waveform E at IC103, pin 40 is a 1.2288MHz square wave.
3. Check that the RESET line is high.
4. Check that there is activity on the TX and RX lines between pcbs 1 and 22 (via opto-couplers) at IC103 pins 11 and 12. (See 'Fail 1')
5. Apply a short circuit to the voltage input terminals , then check the waveform from IC16 pin 10 at TP4 which should resemble the following:

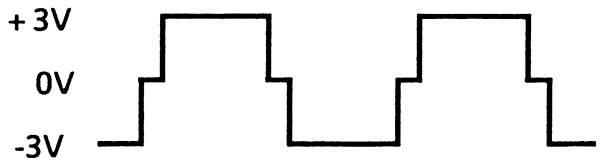

If there is no waveform, then check the ADC comparator outputs and reference voltages. The ADC forcing waveform of 300Hz is generated by IC103 pin 9. The reference voltages at IC16 pins 6 and 9 should be -3.1 and +3.1 respectively.